WE LOCK PCB10EBL41 Password Bluetooth Smart Door Lock Instructions

WE LOCK PCB10EBL41 Password Bluetooth Smart Door Lock Instructions

Contents

1 Applicable size
2 Product Components
3 Passcode: flow chart
4 RFID Card: Flow Chart
5 Other Settings: Flow Chart
6 Accessories list (TOOL BOX)
7 Install battery
8 Adjust the length of the cylinder
9 Installation pictures
10 Resetting diagram
11 Unlock and lock
12 FAQ
13 Log in to the app
14 Bind the device
15 Specifications
16 Operating instruction
17 Documents / Resources
18 Related Posts

Applicable size

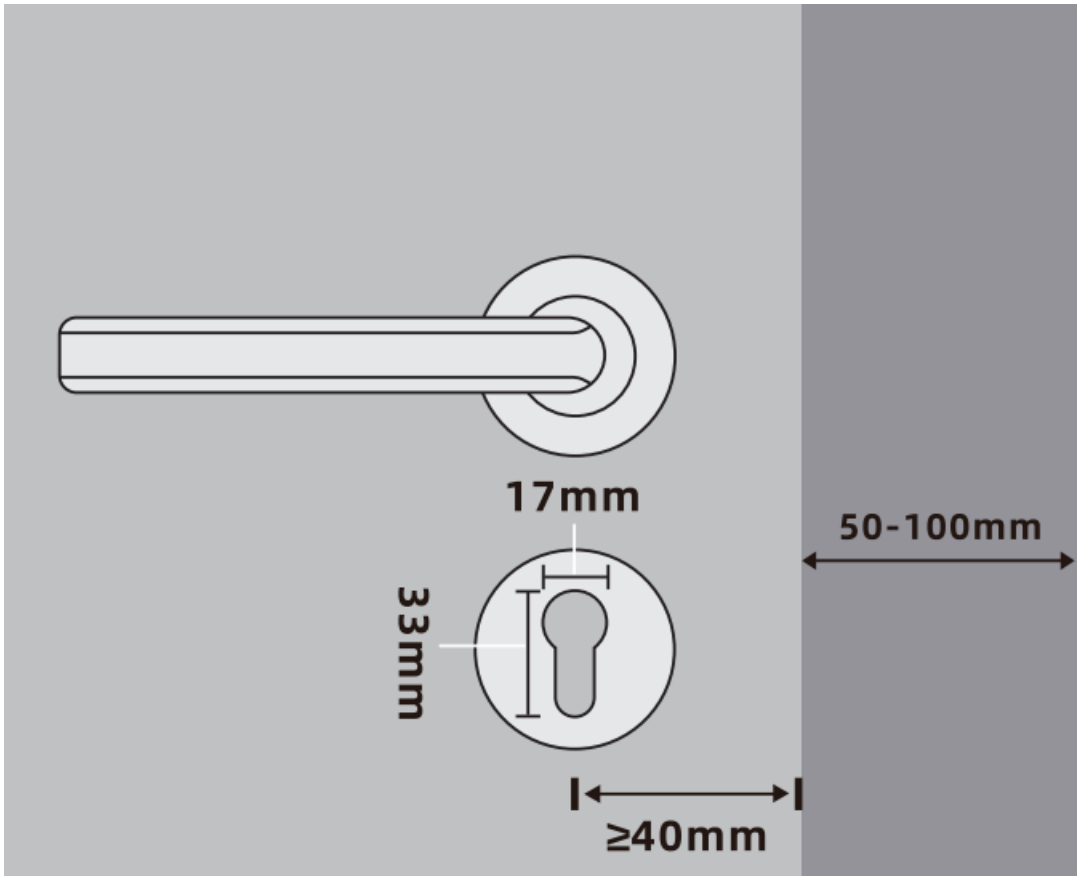

Product Components

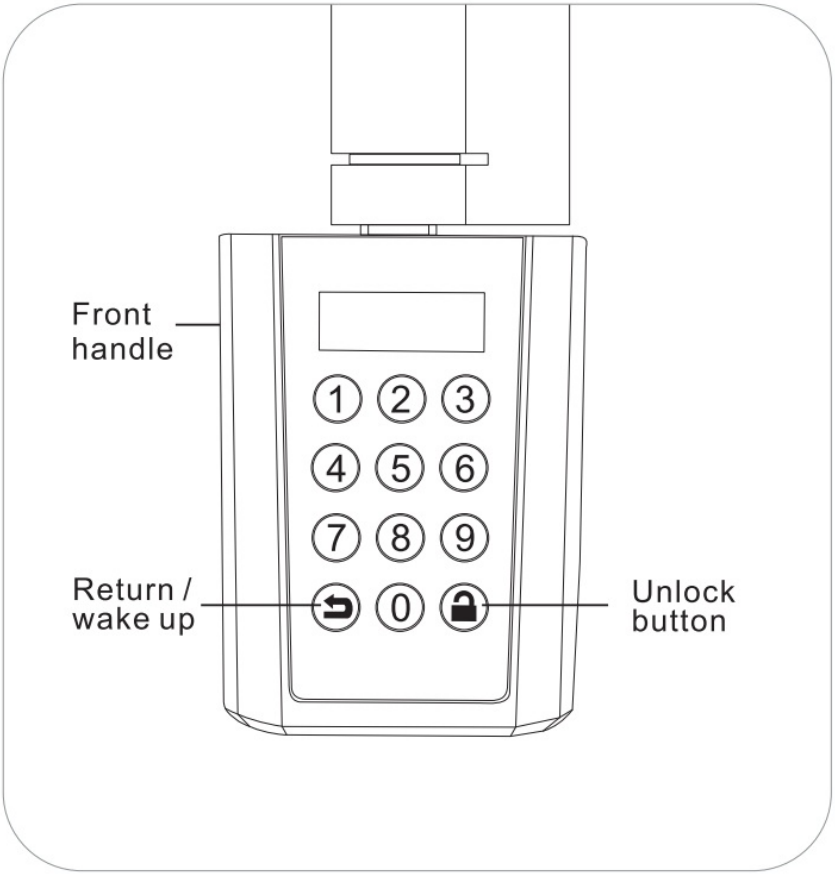
Front handle
1 2 3
4 5 6
7 8 9
Return / wake up
0
Unlock button

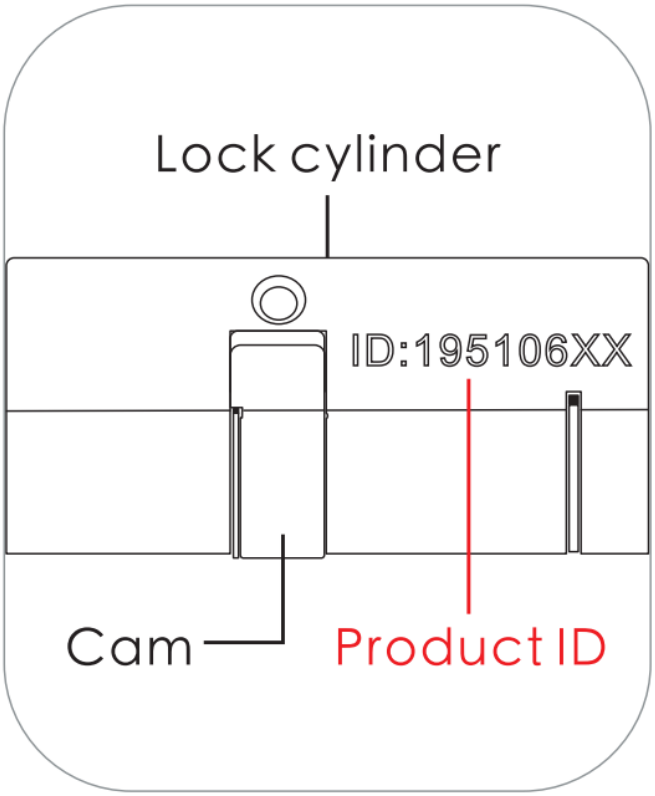
Lock cylinder
ID:195106XX
Cam
Product ID

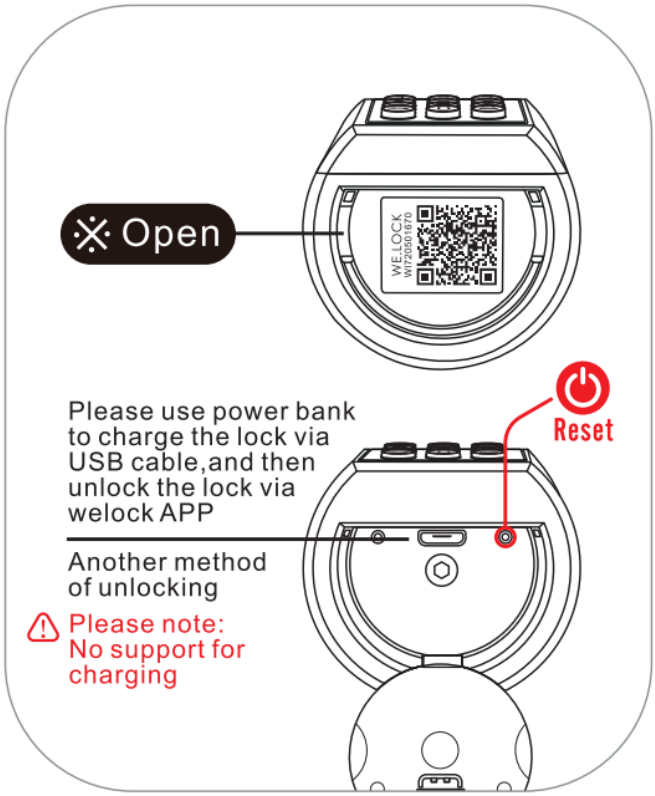
Open
WE.LOCK
Reset
Please use power bank to charge the lock via USB cable,and then unlock the lock via welock APP
Another method of unlocking
Please note:
No support for charging

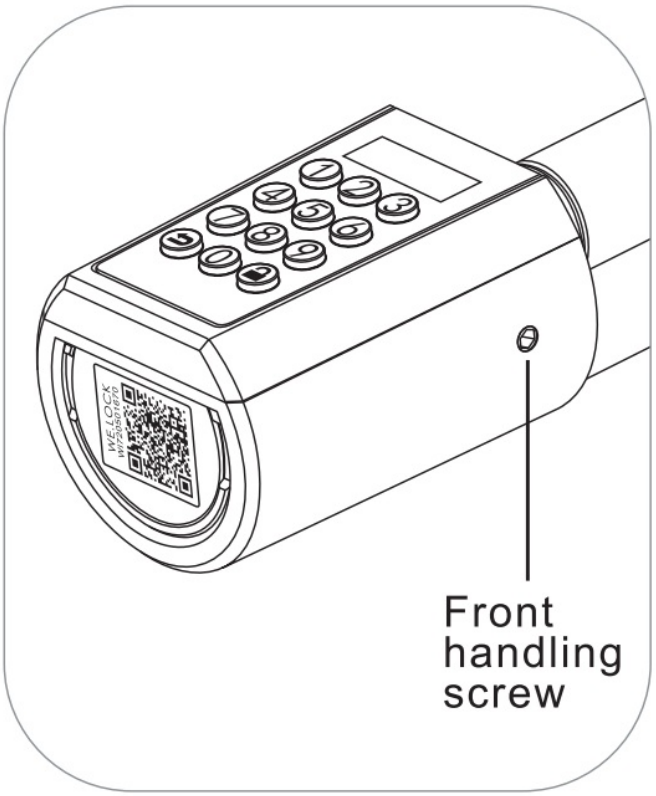

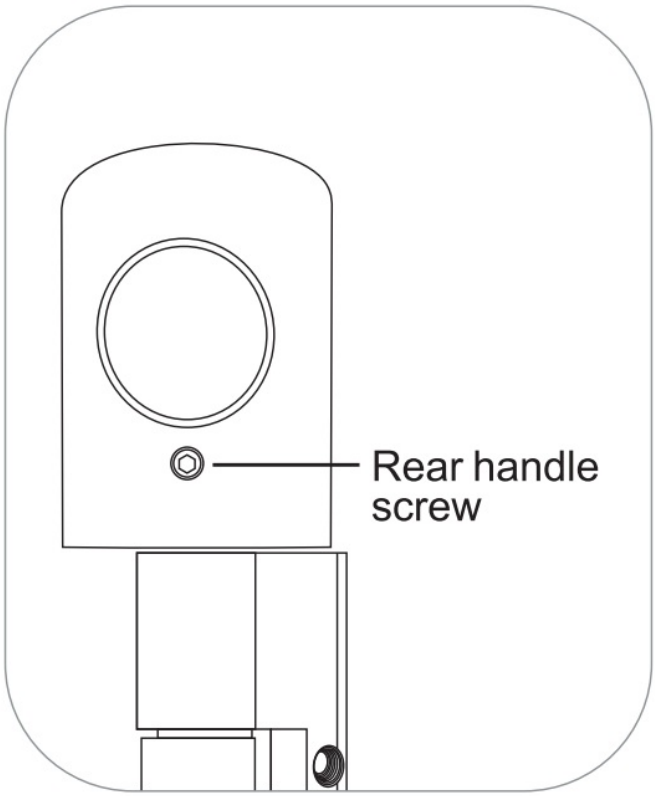

Passcode: flow chart

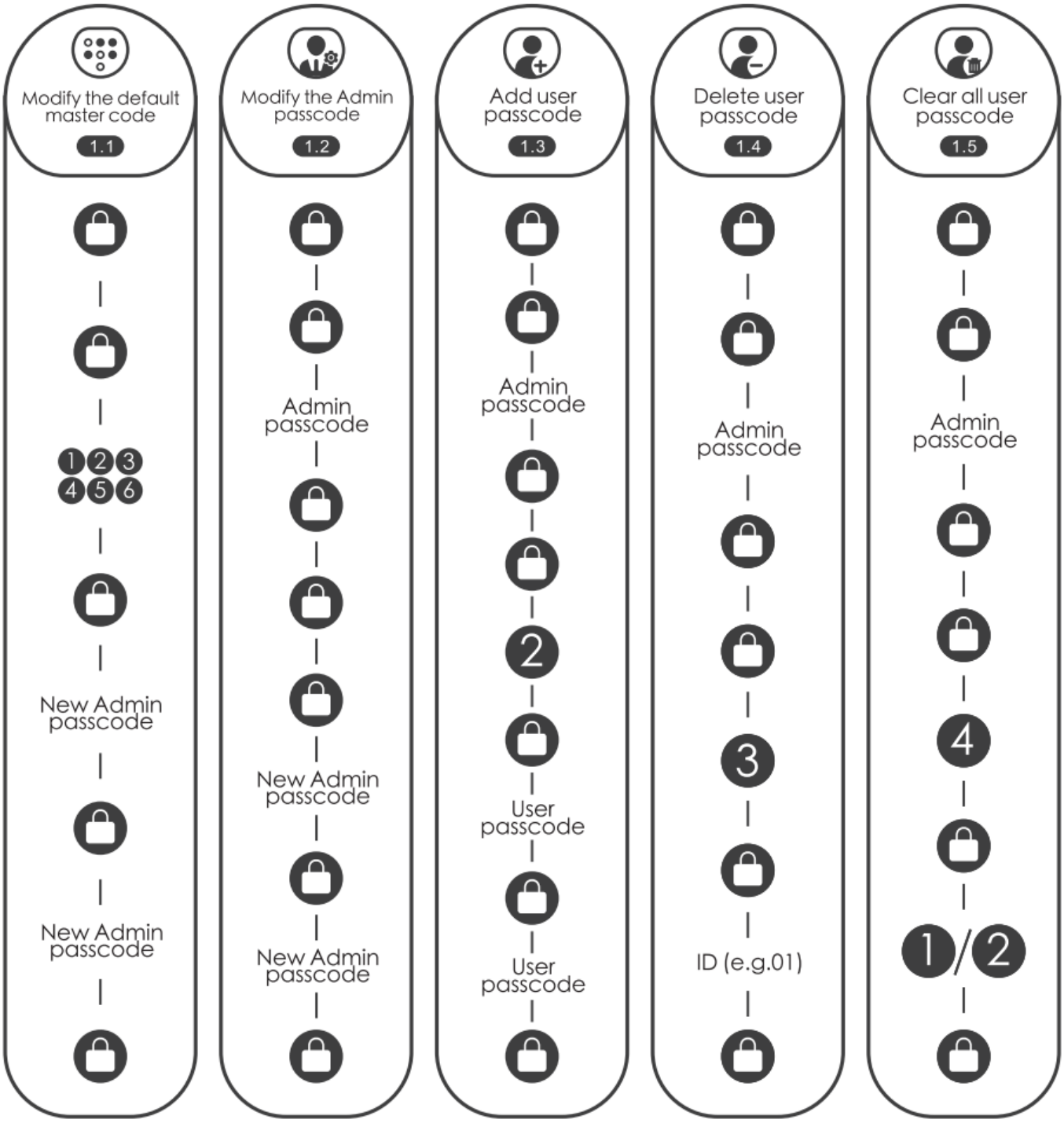

RFID Card: Flow Chart

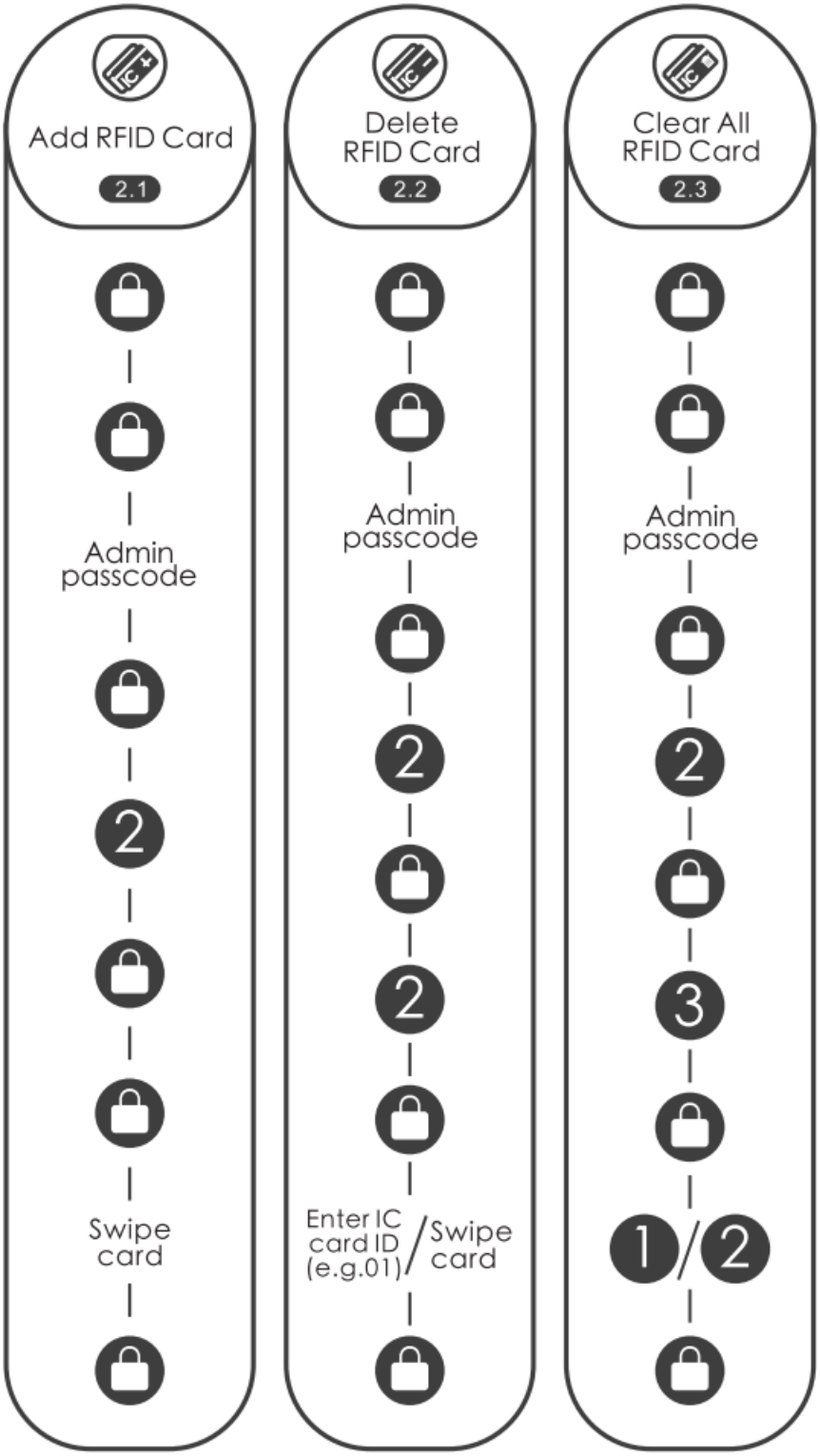

Other Settings: Flow Chart

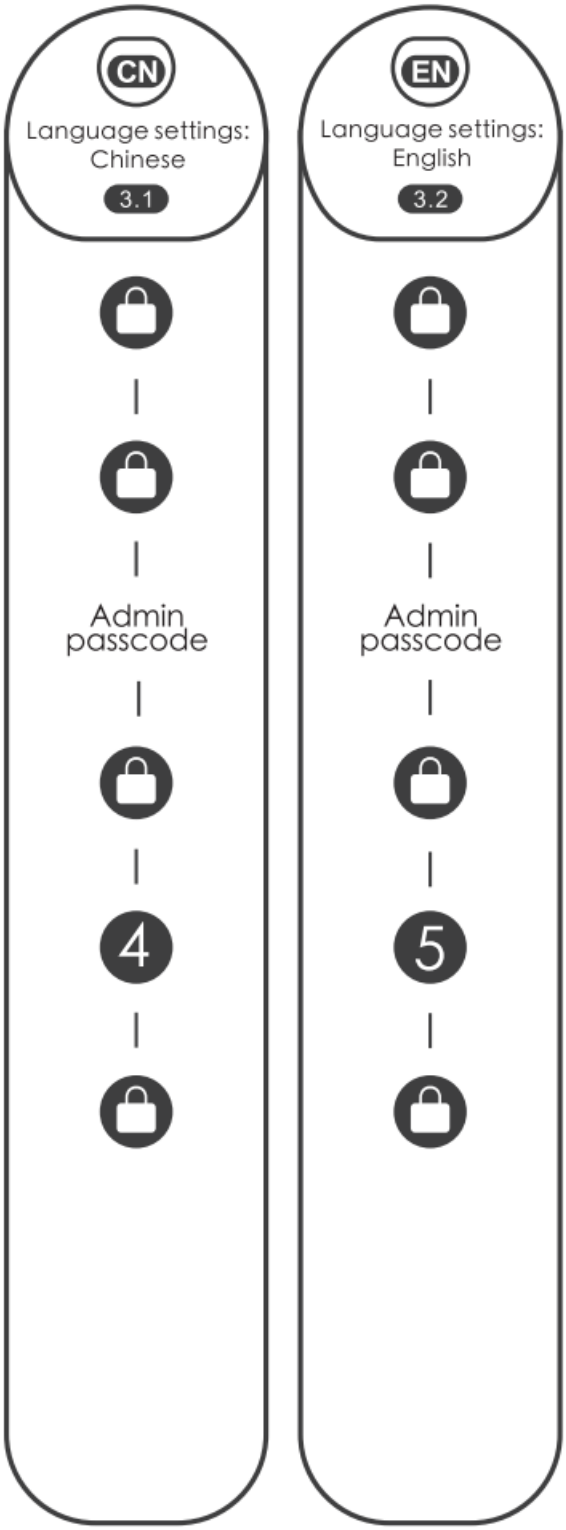
CN
Language settings:
Chinese
3.1
Admin
passcode
4
EN
Language settings:
English
3.2
Admin
passcode
5

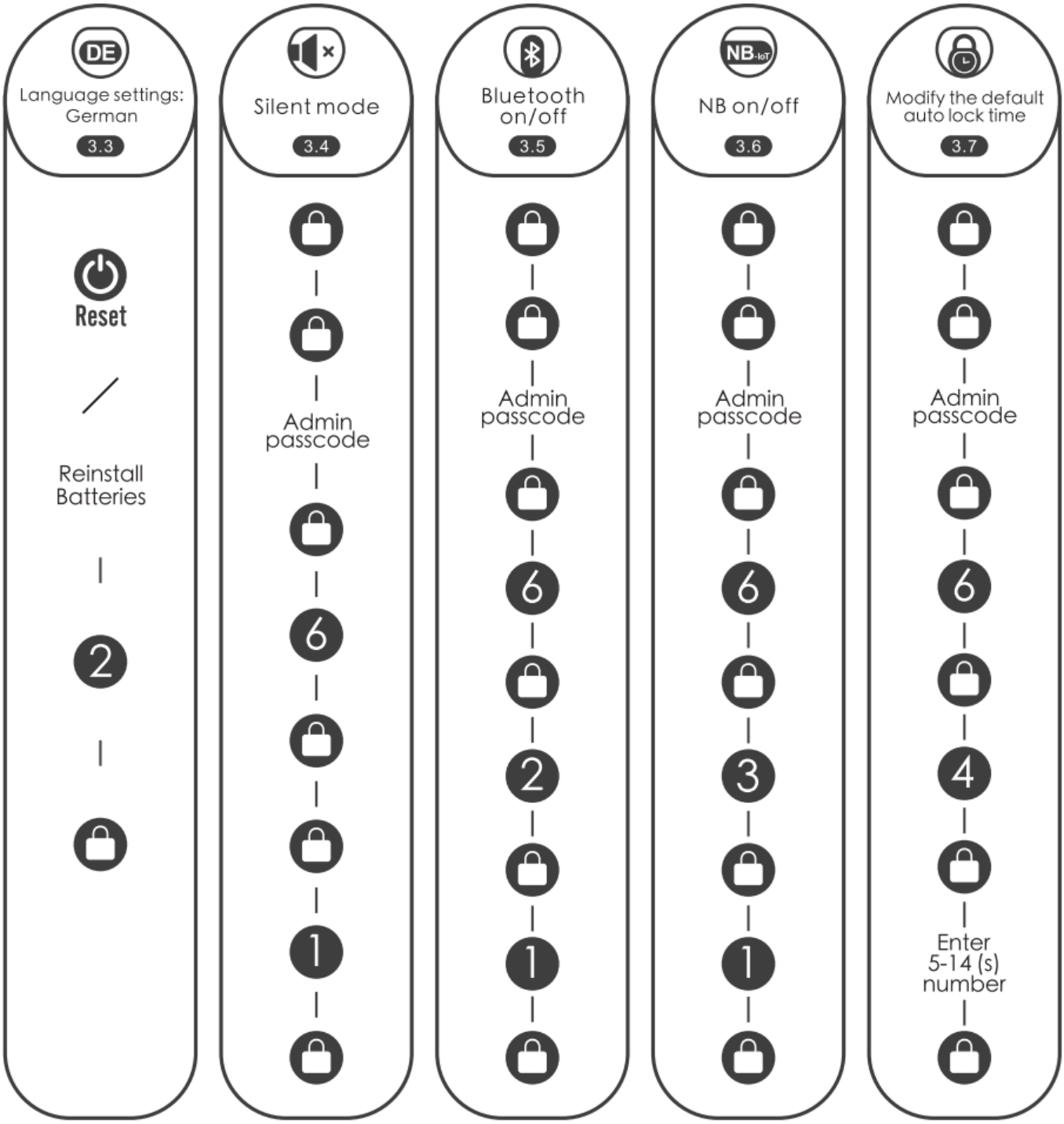
Language settings: German
3.3
Reset
Reinstall Batteries
2
Silent mode
3.4
Admin passcode
6
1
Bluetooth on/off
3.5
Admin passcode
6
2
1
NB on/off
3.6
Admin passcode
6
3
1
Modify the default auto lock time
3.7
Admin passcode
6
4
Enter 5-14 (s) number

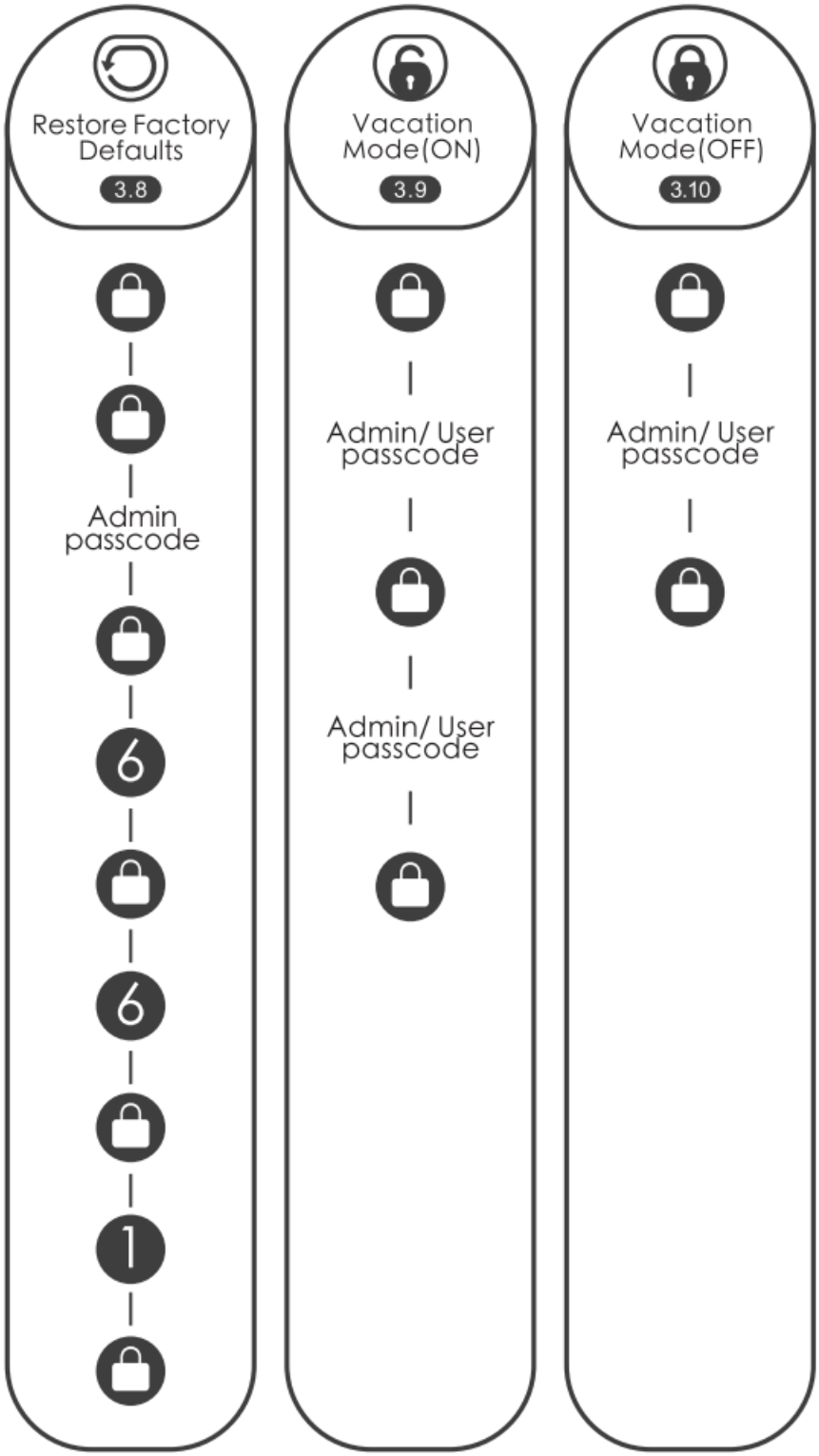

Scan the QR Code on the lock

Downloadable Instructions and Watch Videos

A smart way to open your door. WE.LOCK
www.WELOCK.com

Accessories list (TOOL BOX)

If there is alack of accessories, please contact customer service in time.

- RFID Card x3

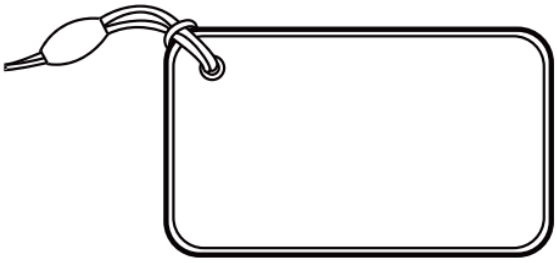

- Phillips screwdriver x1

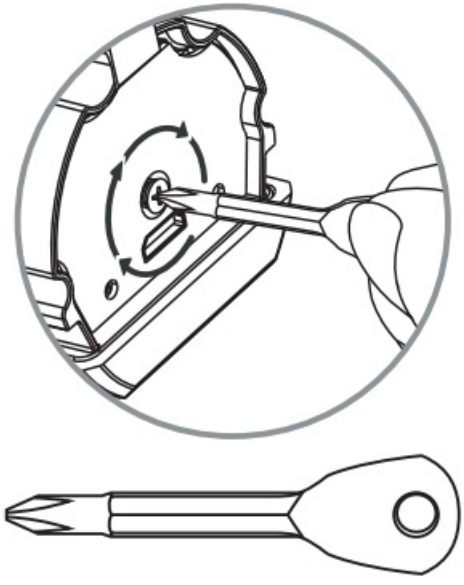

- Allen Key x1

- Manual

- Product ID

- Fixing screw for battery cover x2

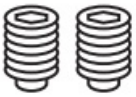

- Thimble x1

- Front handling screw x2

- Silicon plug x2

Install battery

1. Loosen the screws with allen key

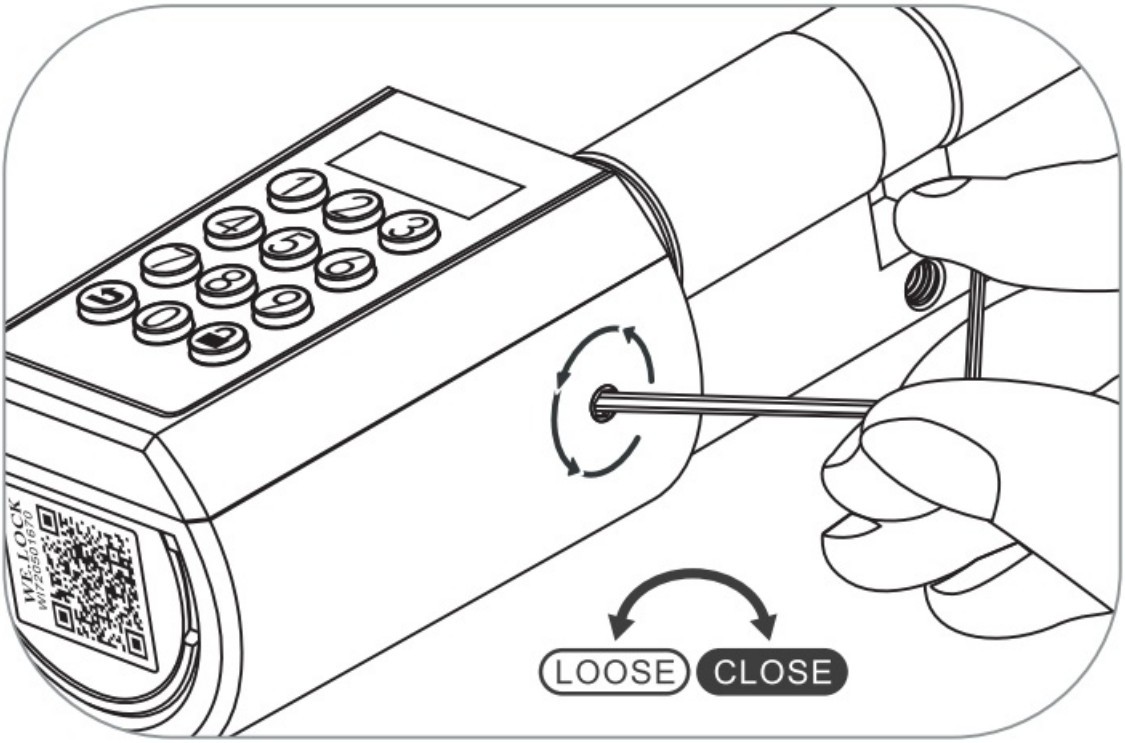

2. Open the stainless steel cover

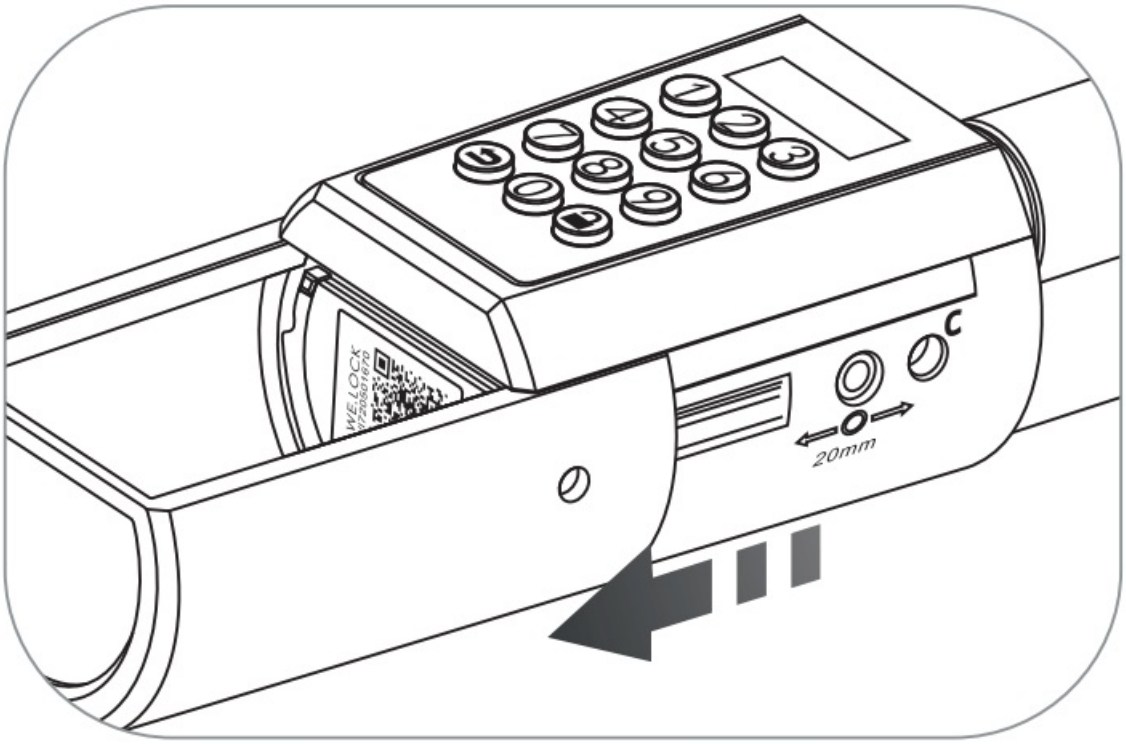

3. Open the battery cover

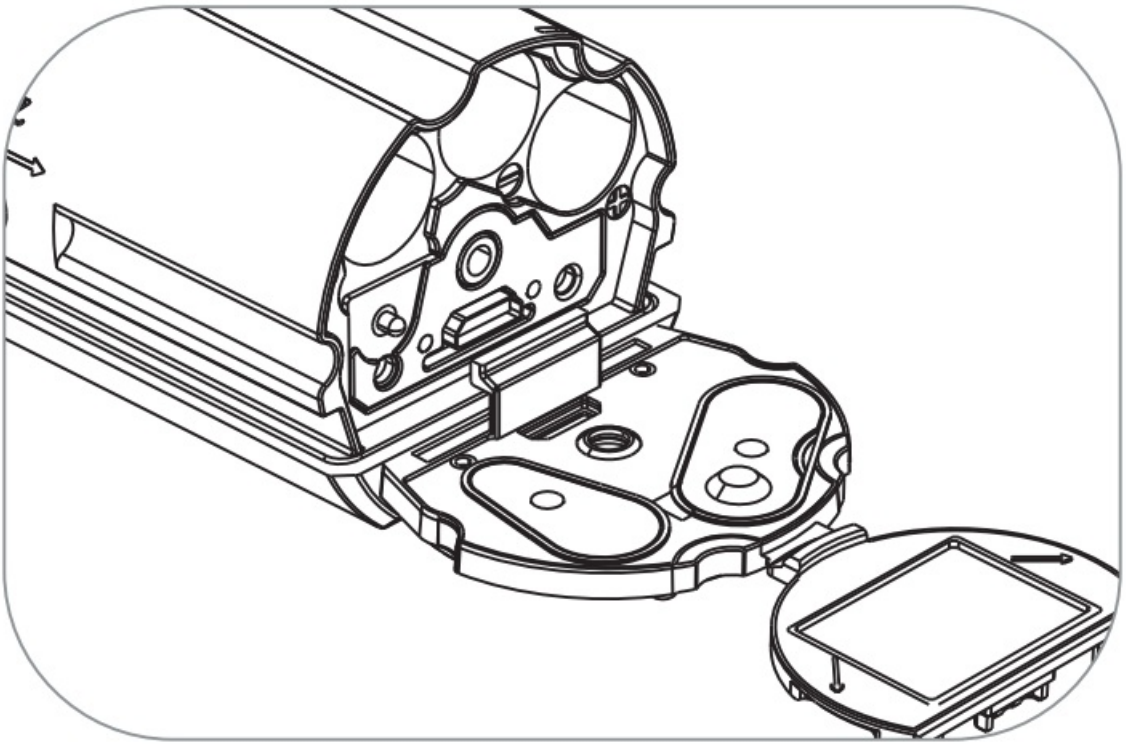

4. 3 x AAA battery (Please buy it by yourself)

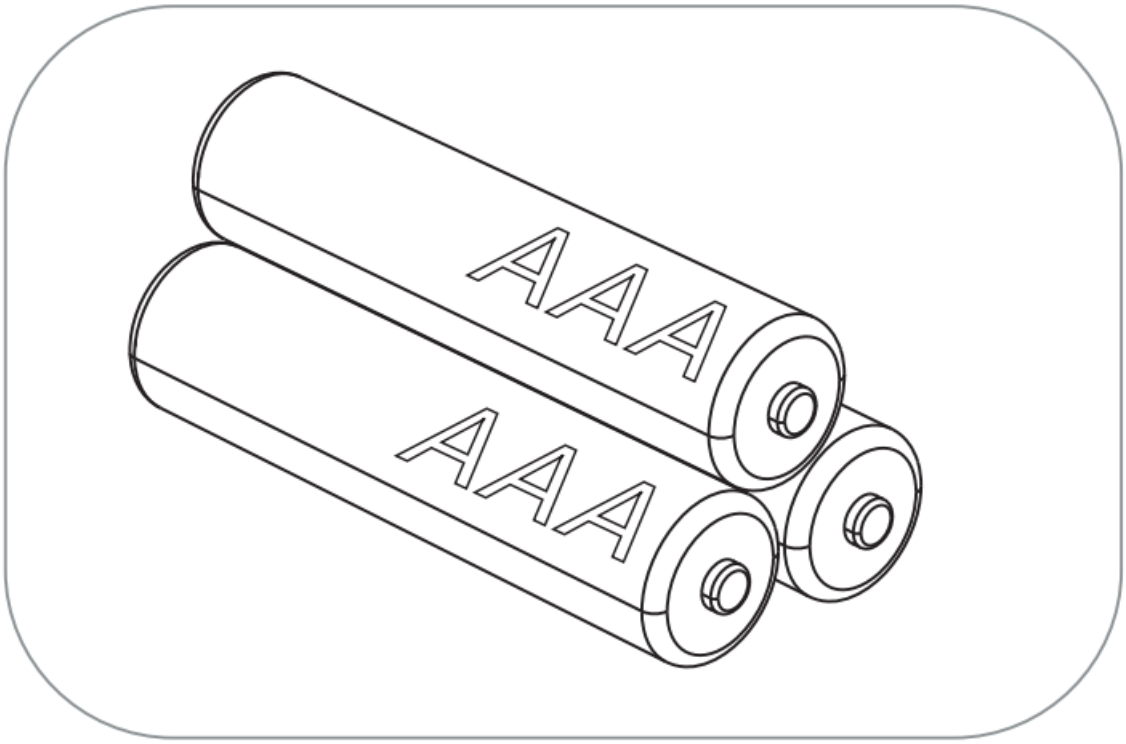

5. Install battery

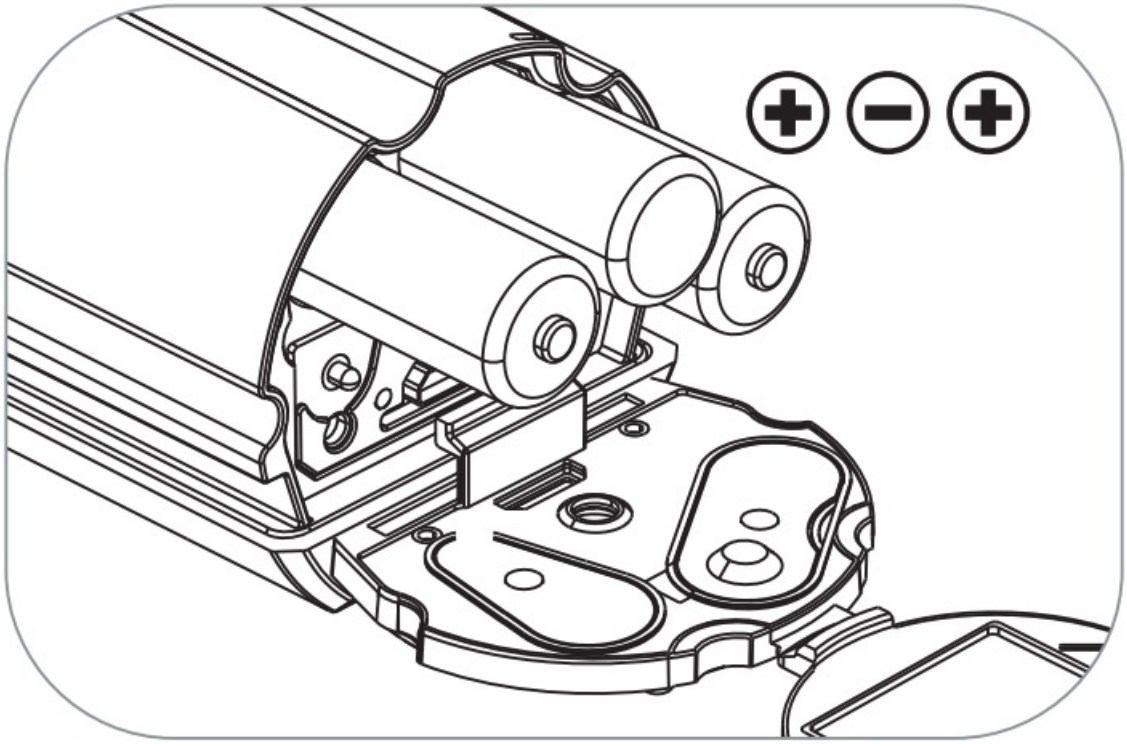

6. Fix the Battery cover and tighten the screws.

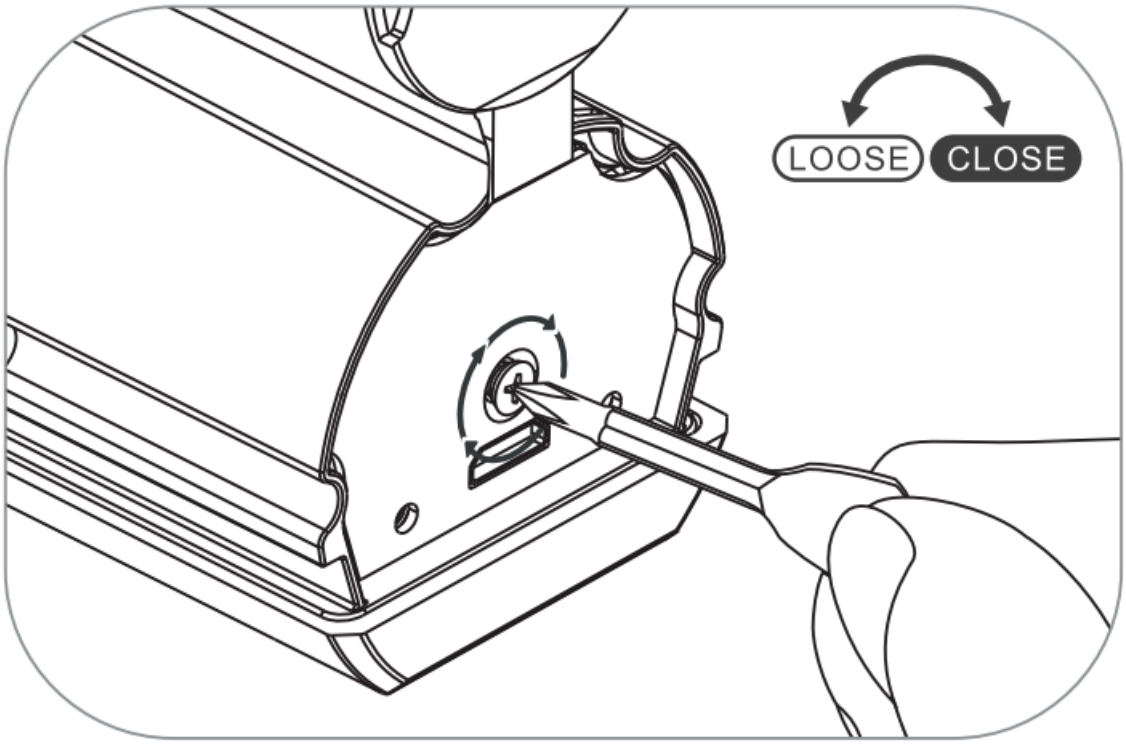

Adjust the length of the cylinder

Depending on the required cylinder length you can adjust the interior and exterior length by loosening the screw with the screwdriver and then pulling out the handle upon need.
Tighten the screws after adjustment and plug the adjustment holes with silicone plug. which can play a certain waterproof effect.

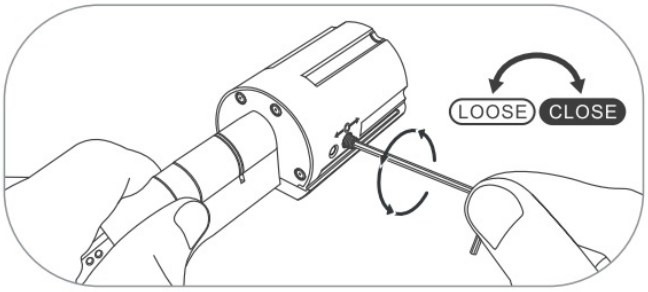

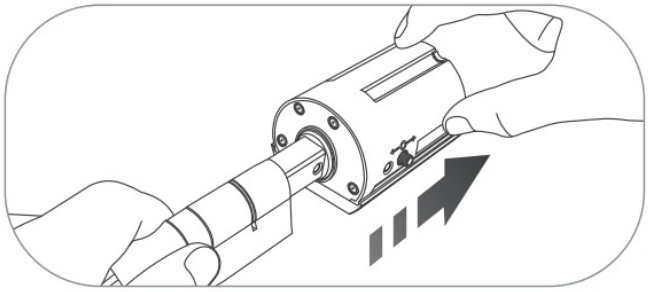

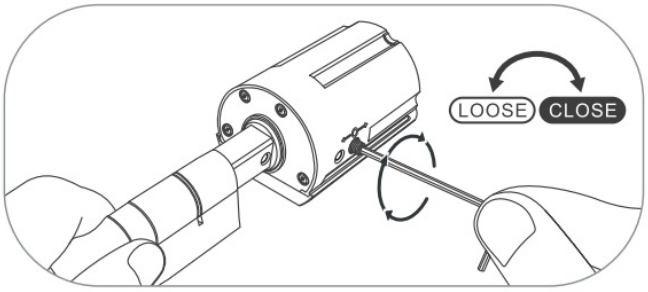

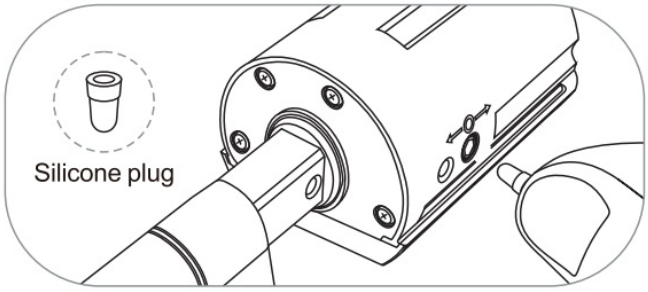

Due to the security reason, the front handle cannot be token off.

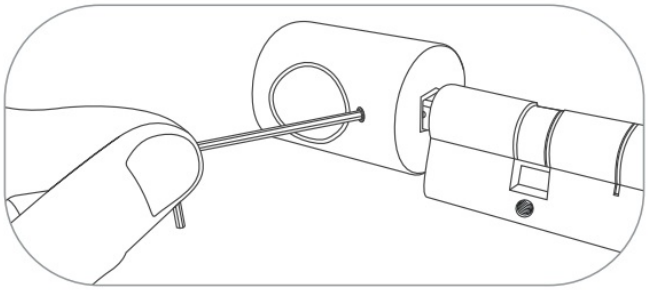

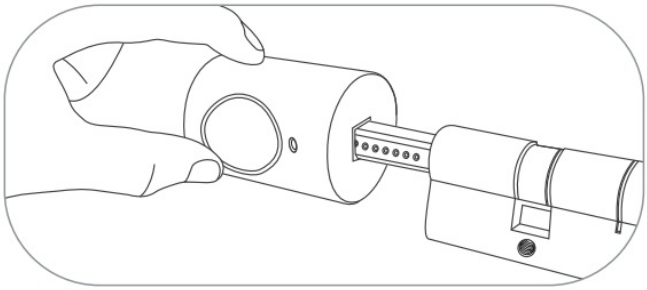

Installation pictures

1. Remove the fixing screw and original cylinder.

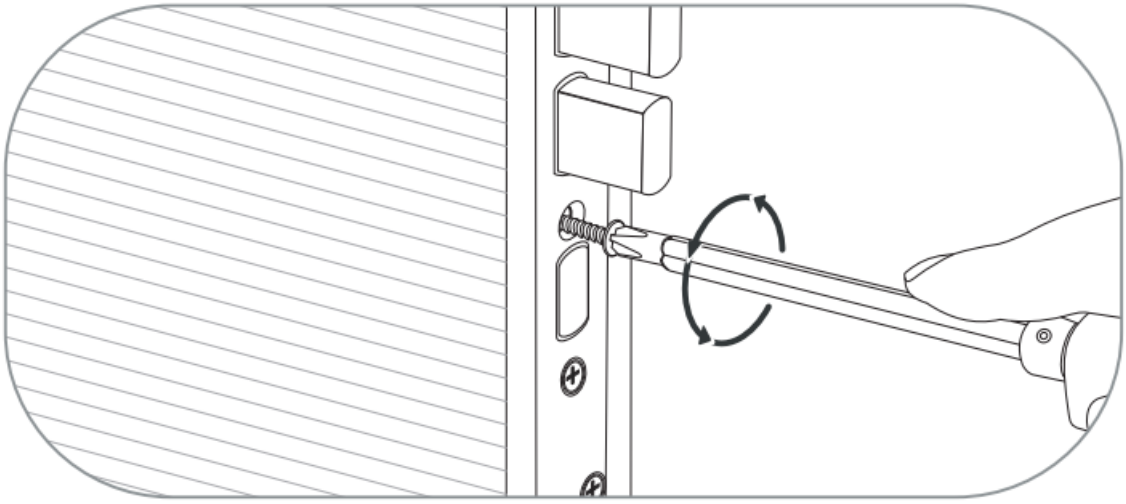

2. Take out the screws and take out the rear handle.

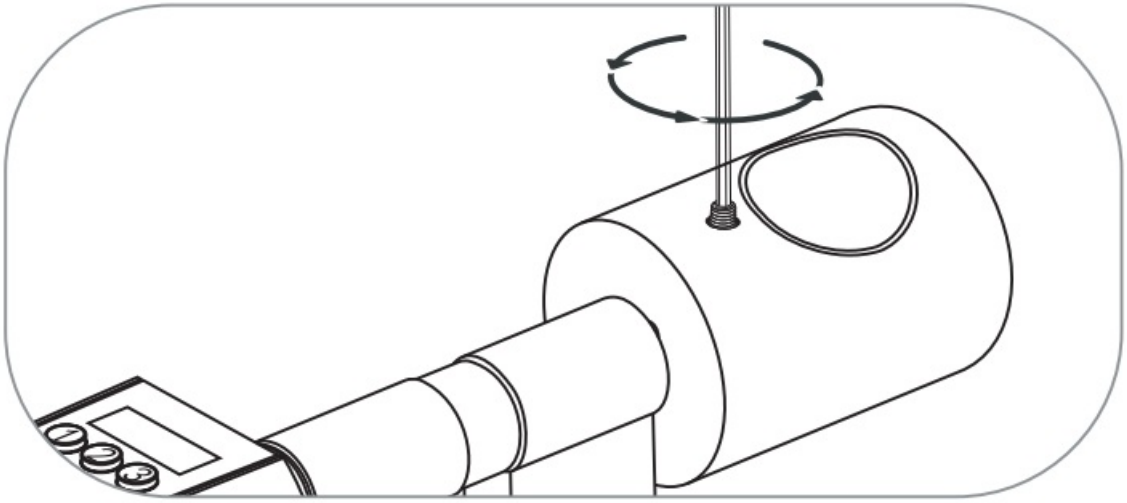

3. The lock cylinder is installed into the lock hole from the outside.

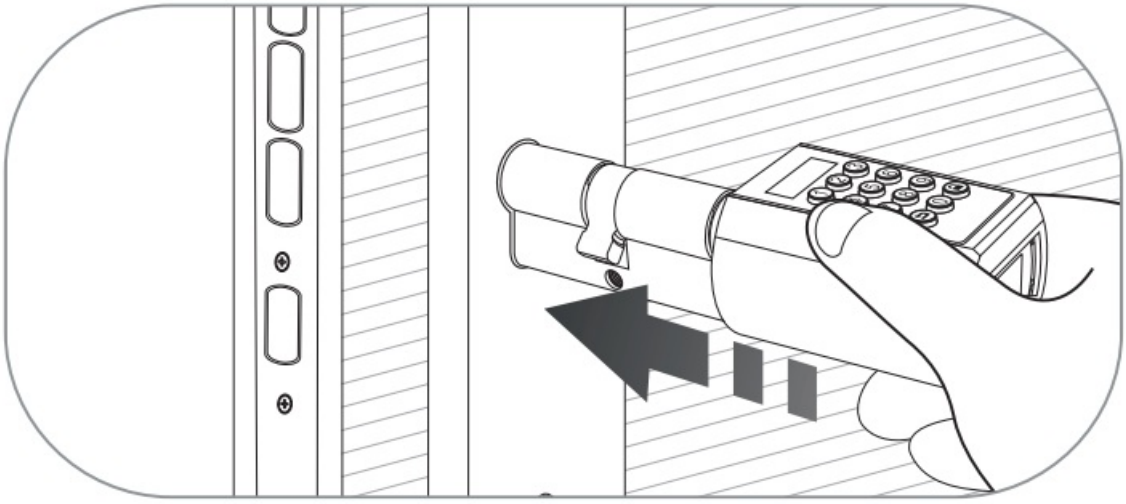

4. Installation Fixing screws.

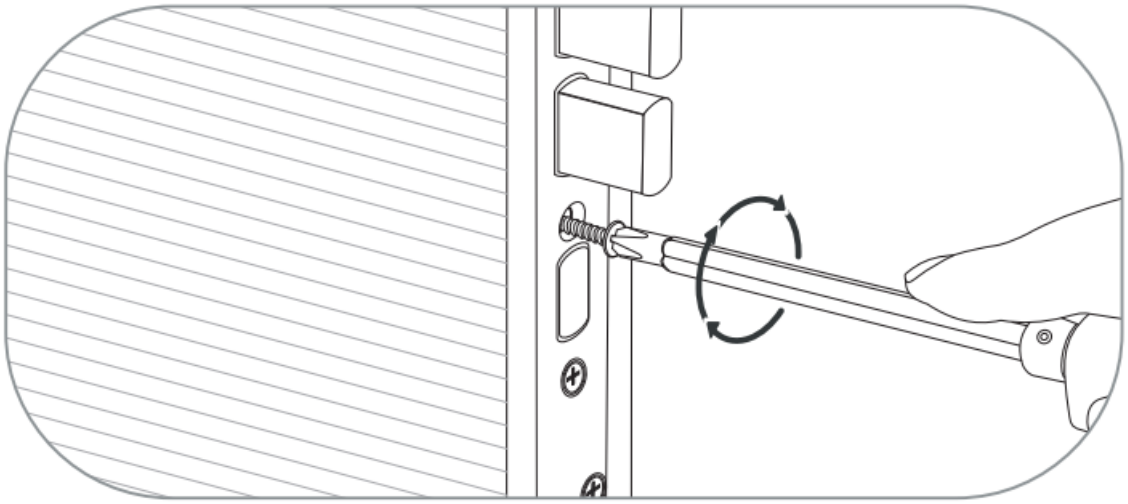

5. Install rear handle.

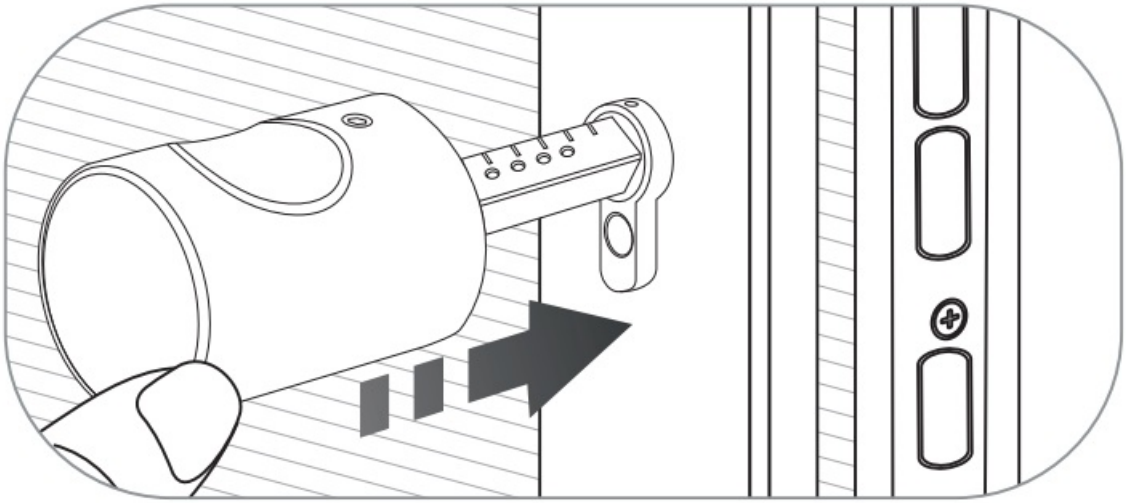

6. Fixed rear handle screw.

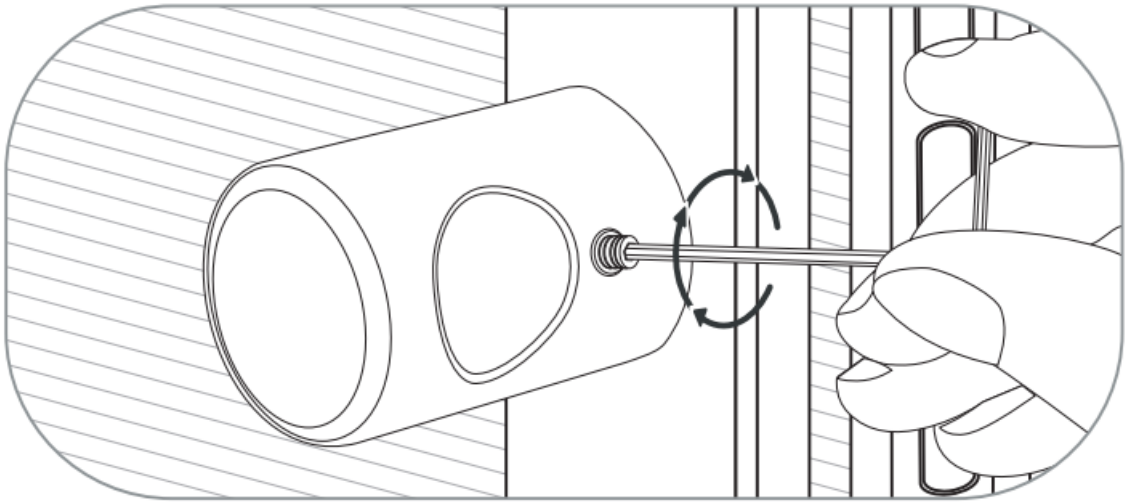

Resetting diagram

1. Opening the silicone cover
2. Find the Thimble in the attached accessories.
3. Find the hole where the reset button is located.
4. Insert the thimble into the hole and press the reset button.

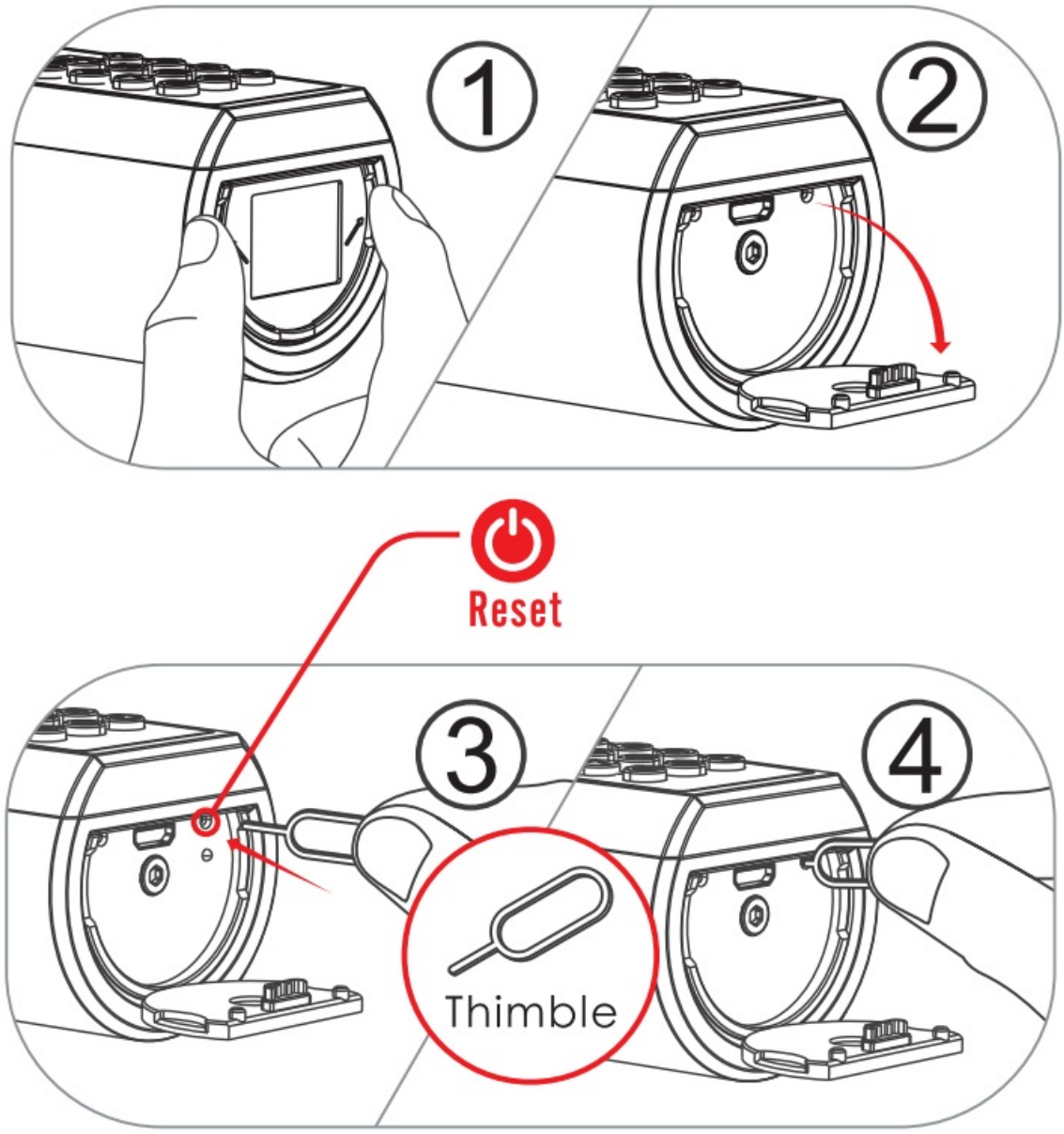

Unlock and lock

Unlock the door from outside

- The keyboard lights up.

- Screen shows “Unlocked, please turn on the handle.”

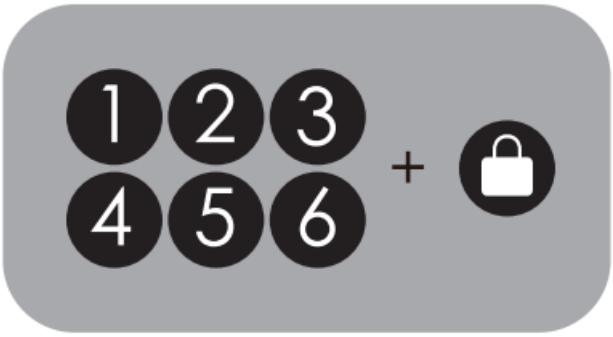

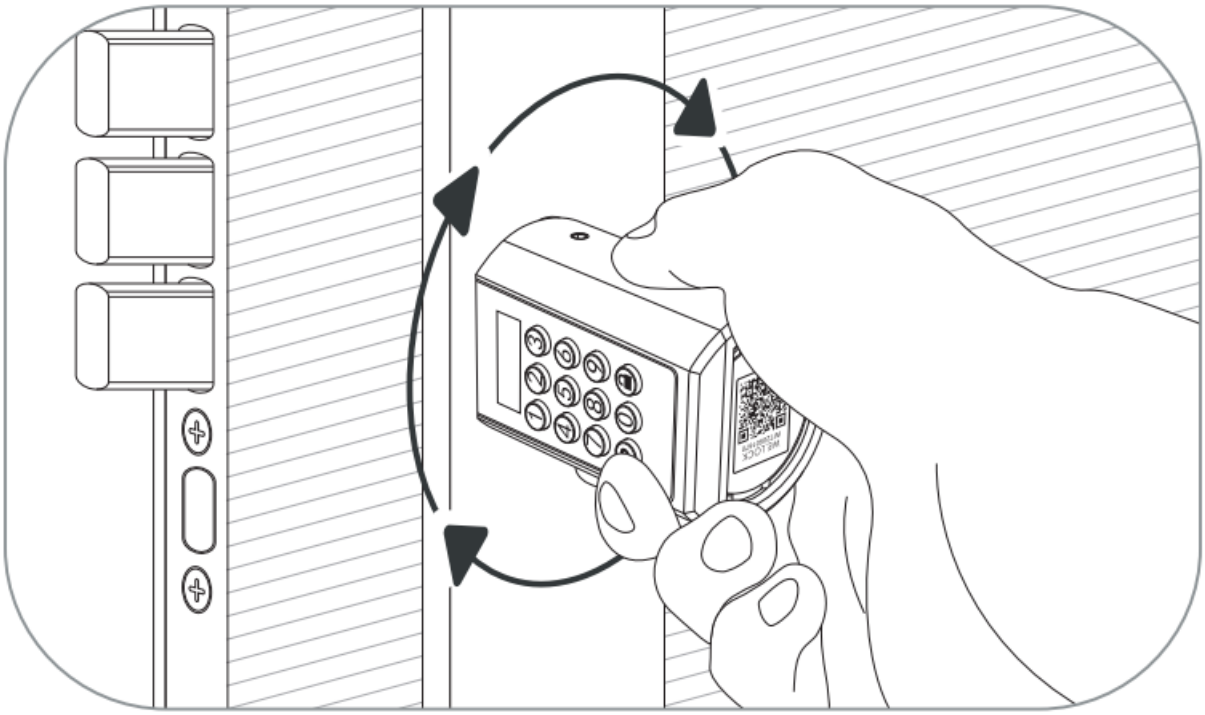

The knob can be rotated 360 degree freely after locked.
To protect the lock not be damaged by torsion forcefully.

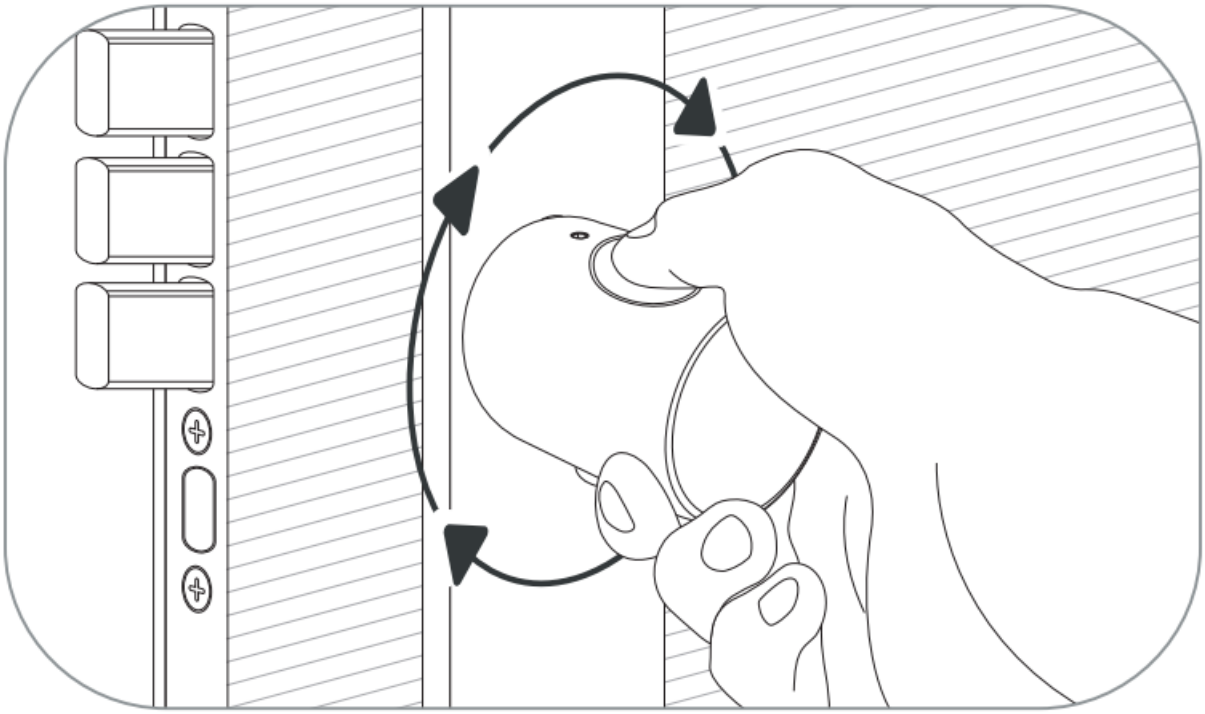

Low battery prompt:

After waking up, the screen displays.

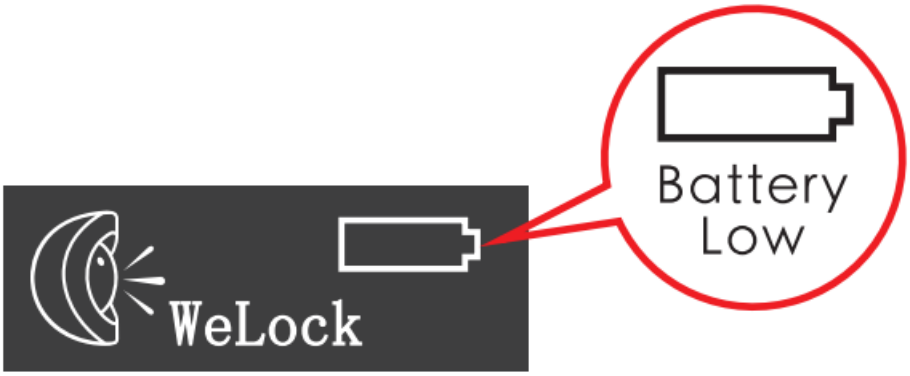

After 3 “beep beep” beeps. The screen prompts: “Battery Low”.

Please replace the battery promptly when the above message appears.

FAQ

- **What should I do when I receive the lock?**
  When you received the lock, please modify the default password “123456” to your own admin password first, so please keep it in your mind.
- **Where can I find thelock ID?**
  Please find the lock ID with 8 digits number on the middle of lock, or find it on packing box.
- **When will the low battery alarm?**
  The battery is below 20a.
- **What is the USB backup key for?**
  USB backup key is spare key, for emergency situations, like when the lock is broken or battery run out, then you can use power bank to charge the lock via USB cable, then use our app to unlock the lock.
- **How can contact customer service?**
  Please contact this email:
  Service@WelockGlobal.com

Bluetooth activation and login instructions

Scan the QR code on the lock

Select “Android/iOS” to download

Log in to the app

1. Select your country/region
2. Enter the phone number/email to get the verification code
3. Click “Send”
4. Enter the verification code after receiving the message
5. Click “Login”

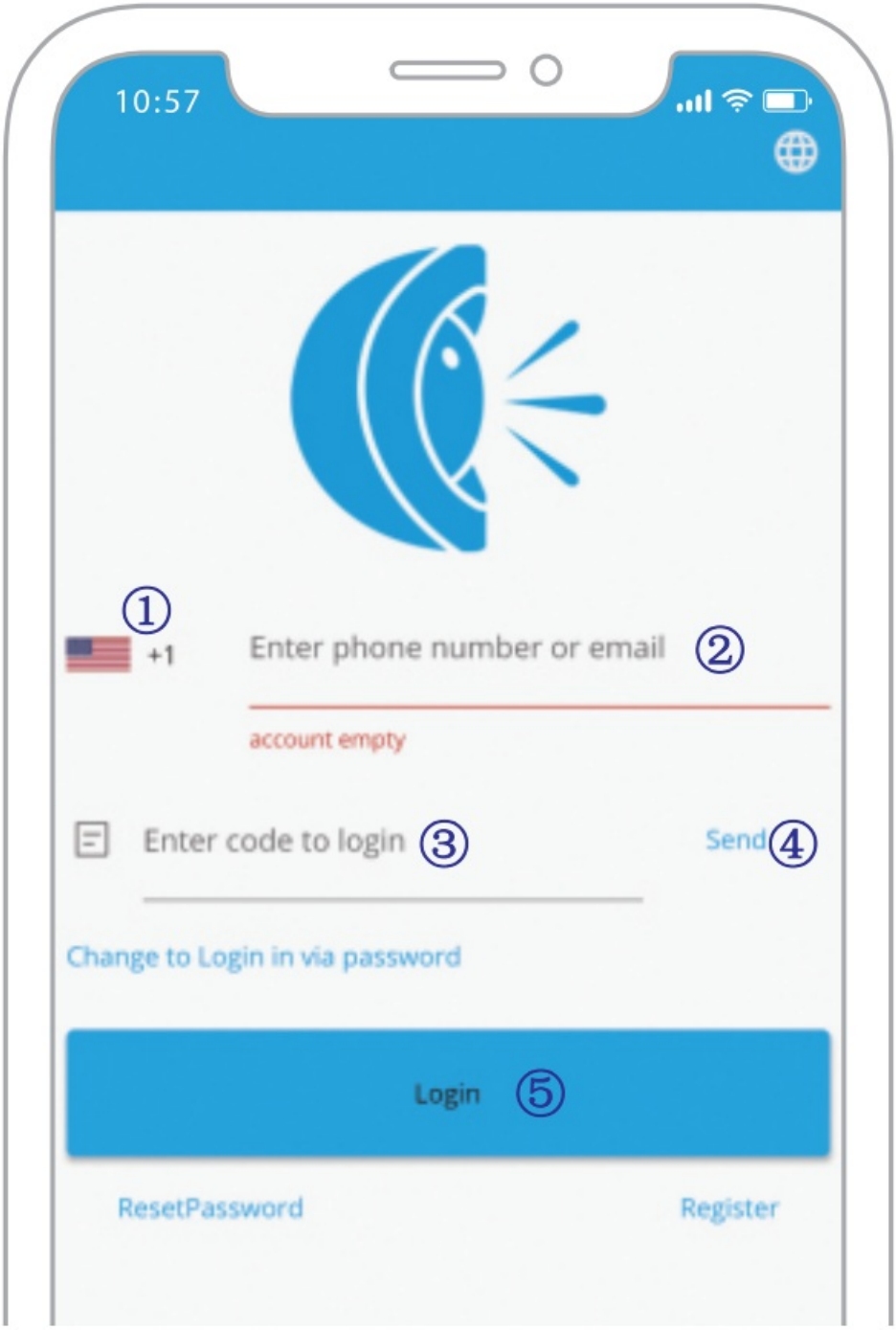

Bind the device

1

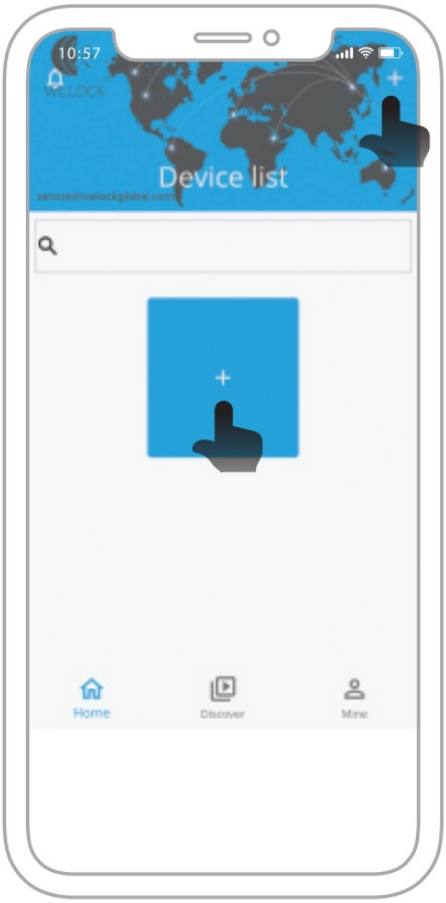
10:57
Device list
Home
Discover
Mine

10:57
Device list
Tips
WeLock need camera to scan the QR code
Cancel
OK

2

3

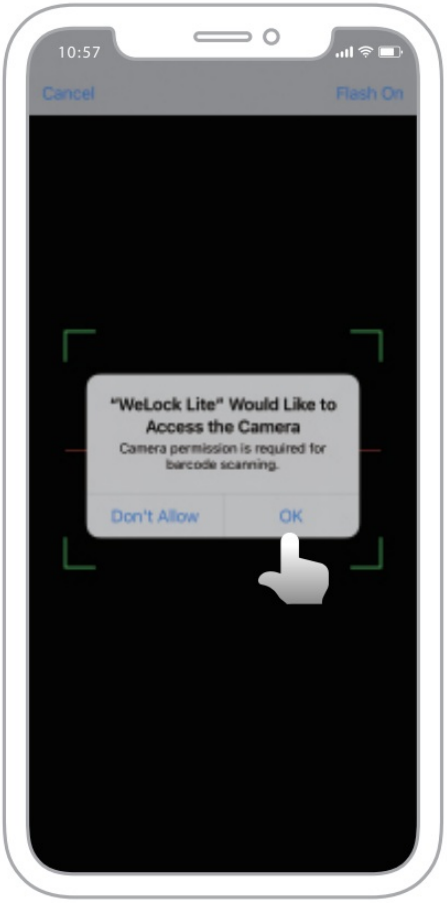
10:57
Cancel
Flash On
"WeLock Lite" Would Like to Access the Camera
Camera permission is required for barcode scanning.
Don't Allow
OK

10:57
Cancel
Flash On

4

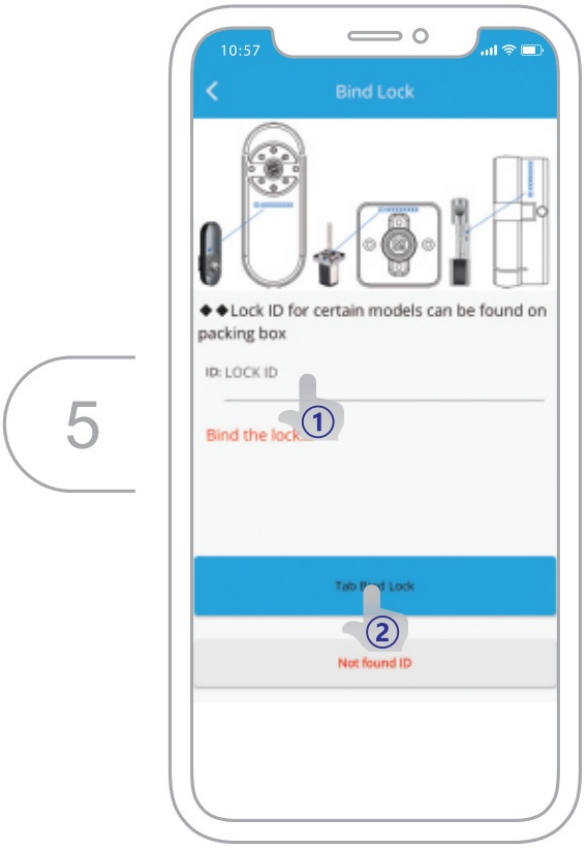

Specifications

Brand	**WE.LOCK**
Applicable door types	Wooden doors, Interior doors
Adjustable range	50-100 mm
Operating Temperature	-25°C – 60°C
Pressing Cycle Times	100,000 Times
Material of handle	Zine Alloy
Way to unlock	Passcode / IC card / Bluetooth
Battery Type	3*AAA Battery
Power input	4V-6V
Battery Replacement	Replaceable
Color	Silver
Battery Life	>1 year

Operating instruction

1. Enter the wrong passcode 5 times continuously . the system is locked for three minutes and cannot operate.
2. Press to wake up the keyboard+10 digits temporary passcode Enter the wrong passcode 5 times continuously, the system is locked for three minutes and the cannot operate.
   Temporary passcode generation needs to be donein the App.

The time on the screen should be the same as the time on the phone, otherwise the temporary passcode will be invalid.

3. Press to wake up the keyboard+ swipe the IC cards
   Swipe the unmatched card 5 times continuously, the system is locked for three minutes and the cannot operate. Any IC card can unlock the door in foctory state.
4. Bind the lock on APP
   Bind the lock on APP via Bluetooth, click “unlock” , and the phone time will be synchronized to the lock via Bluetooth.

Documents / Resources

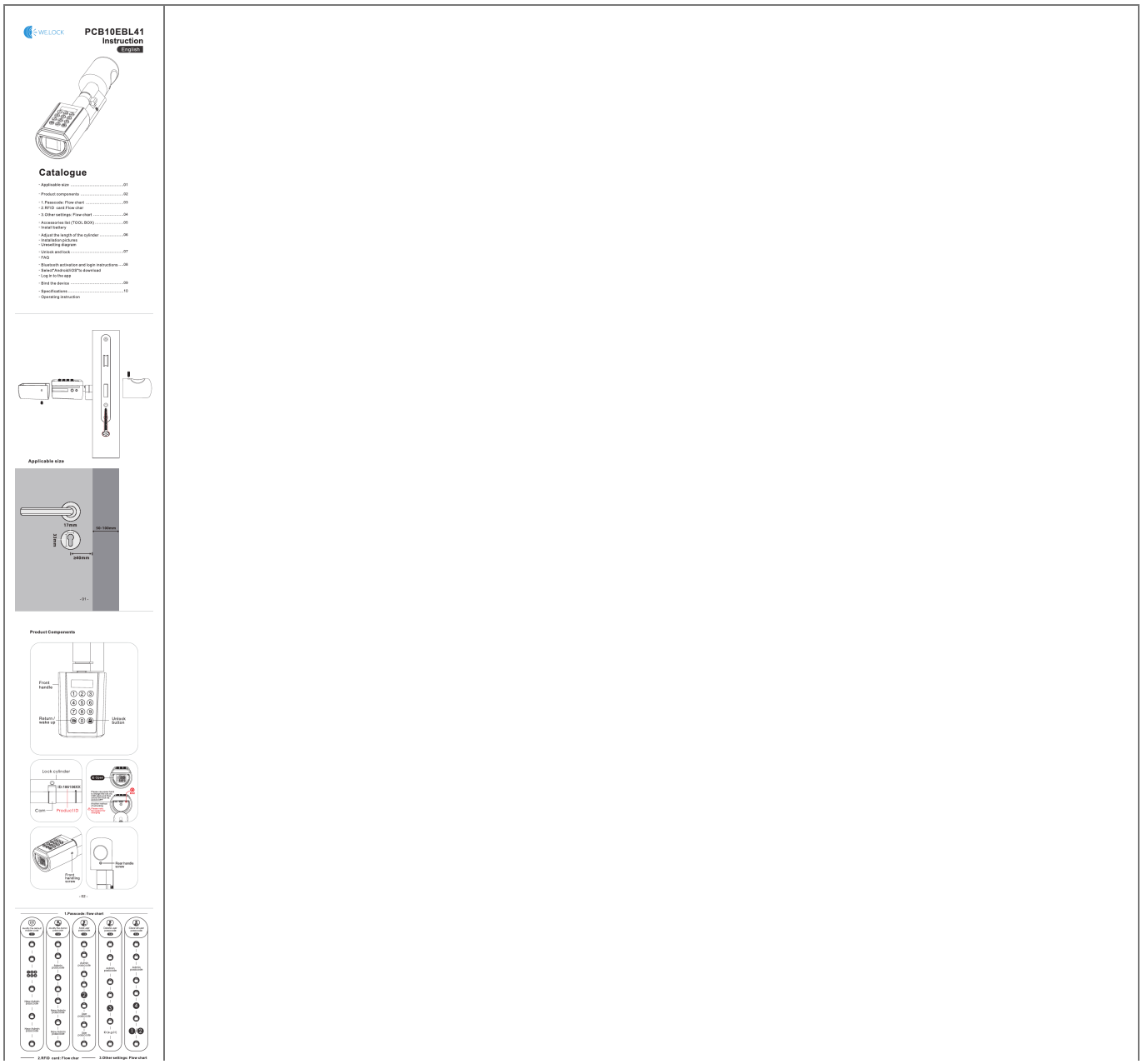

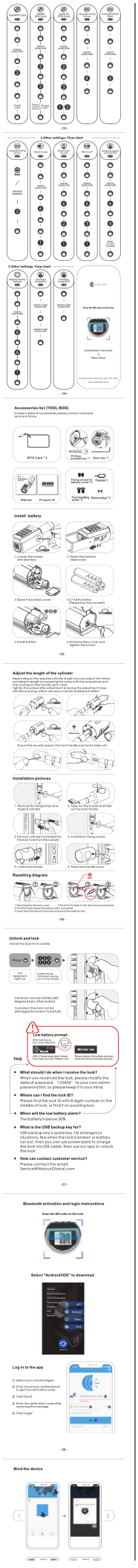

[WE LOCK PCB10EBL41 Password Bluetooth Smart Door Lock] [pdf] Instructions
PCB10EBL41 Password Bluetooth Smart Door Lock, PCB10EBL41, PCB10EBL41 Door Lock, Password Bluetooth Smart Door Lock, Bluetooth Smart Door Lock, Password Smart Door Lock, Smart Door Lock, Door Lock, Smart Lock, Lock

Specifications

Brand	WE.LOCK
Applicable door types	Wooden doors, Interior doors
Adjustable range	50-100 mm
Operating Temperature	-20℃ -40℃
Pressing Cycle Times	100,000 Times
Material of handle	Zinc Alloy
Way to unlock	Passcode / IC card / Bluetooth
Battery Type	3*AAA Battery
Power Input	4X 4V
Battery Replacement	Replaceable
Color	Silver
Battery Life	<1 year

Operating instruction

1) Enter the wrong passcode 5 times continuously, the system is locked for three minutes and cannot operate.

2) Press ⓘ to wake up the keyboard+10 digits temporary passcode+ the same passcode 5 times continuously, the system is locked for three minutes and the cannot operate. Temporary passcode generation needs to be done in the App. The time on the screen should be the same as the time on the phone, otherwise the temporary passcode will be invalid.

3) Press ⓘ to wake up the keyboard+ swipe the IC cards Swipe the unmatched card 5 times continuously, the system is locked for three minutes and the cannot operate. Any IC card can unlock the door in factory state.

4) Bind the lock on APP
Bind the lock on APP via Bluetooth, click "unlock", and the phone time will be synchronized to the lock via Bluetooth.

Manualsi.