TAOTRONICS TT-DL27 LED Desk Lamp User Guide

Contents

1 TAOTRONICS TT-DL27 LED Desk Lamp
2 Product Diagram
3 Features
4 Package Contents
5 Specifications
6 Troubleshooting Guide
7 Warranty
8 statement
9 Documents / Resources
10 Related Posts

TAOTRONICS TT-DL27 LED Desk Lamp

Product Diagram

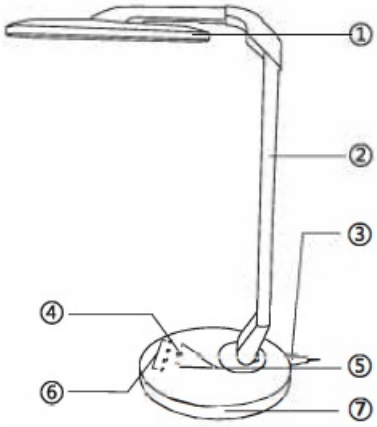

1. Lamp Head
2. Lampard
3. Power Adapter Connector
4. Power/ Timer Button
5. Brightness Buttons
6. Color Temperature Buttons
7. Lamp Base

Thank you for choosing the TaoTronlcs n-DL27 LED Desk Lamp. Please read this manual carefully and store it in a safe place for future reference. If you have any questions or concerns, please contact our customer support team by email at **support@taotronlcs.com**.

Features

- Adjustable lamp head with rotatable LED light panel
- Touch-sensitive color temperature and brightness adjustment (5 levels)
- Memory function
- Auto shut-off timer
- Durable metal alloy lamp arm
- Well- balanced non-tilting lamp base

Package Contents

- l xTaoTronics LED Desk Lamp (Model:TT-DL27)
- l x Power Adapter
- l x User Guide

Specifications

Model	TT-DL27
Light Source Operate Voltage	LED DC l2V❓l.2A
Power	12W
ColorTemperature	300Q-6500K
Lumens	450lm
Operating Temperature	-S”C to 40″C/ 23″F to l04″F
CRI	> 80
Lifespan NetWeight	50,000 hours 1400 g/ 49oz

How to Use
Use the power adapter to connect to a power source.The Power/ Timer Button will light up in blue.

Power On / Off
Tap the Power/ Timer Button to turn on / off the lamp.

Memory Function
The lamp comes with memory function. It will automatically remember your last brightness and color temperature when turned on.The corresponding Color Temperature Button will light up in blue.

Brightness / Color Temperature Adjustment
After the lamp is powered on, tap on the Color Temperature Buttons to activate the corresponding color temperature and the·+· and,_. button to adjust the brightness.

Auto Shut-off Timer
Touch and hold the Power / Timer Button for 1.5 seconds to set l hour timer.The lamp will automatically shut off in l hour.The Color Temperature Buttons will flash 3 times to enter timer countdown.

Caution

- Please do not dismantle the product by yourself, always ask a professional electrician or authorized technician for repairs.
- If you smell a bad odor or anything unusual, please turn off the unit immediately.
- Please do not remove the power cable with wet hands as it may cause an electric shock.
- Do not put this unit near extreme heat sources, moisture, or corrosive substances.
- Regularly clean the lamp with a dry cloth.
- Please store the lamp in a dry and shady place if not being used for a long period of time.
- Use the original power adapter to power the lamp.A wrong input may damage the lamp.

Troubleshooting Guide

Problem	Possible Couse	Solution
The lamp does not light up	No power supply	Power on correctly
	The lamp is not turned on	Turn on the lamp
The Power / Timer Butt on is not re sponsive	Wet hands	Touch the Power / Timer Button wit h dry hands
	Voltage fluctuation	Disconnect the power to restart the lamp
LED failure	LED component foils	Plea se contact the TooTronics Sup port Team

Warranty

This product is covered by the TaoTronics Product and Labor Warranty for 12 months from the date of its original purchase. If manufacturing defects occur. please contactTaoTronics support (**support@taotronics.com**) immediately to launch a warranty claim. We will instruct you on how to return the defective unit back to us for repair or replacement. No return will be accepted without seller authorization

statement

We can only provide after sale service for products that are sold by TaoTronics orTaoTronics authorized retailer and distributors. If you have purchased your unit from a different place, please contact your seller for return and warranty issues.

Documents / Resources

	TAOTRONICS TT-DL27 LED Desk Lamp [pdf] User Guide TT-DL27 LED Desk Lamp, TT-DL27, LED Desk Lamp

Manuals+.