SONOFF NSPanel-EU Smart Scene Wall Switch User Guide

Smart Scene Wall Switch
SONOFF
TX NSPanel
Quick Guide V1.0

Works with everything

Contents

1 Power off
2 Wiring instruction
3 Download the eWelink APP
4 Power on
5 Add the Device
6 Operation Guide
7 User Manual
8 Documents / Resources
9 Related Posts

Power off

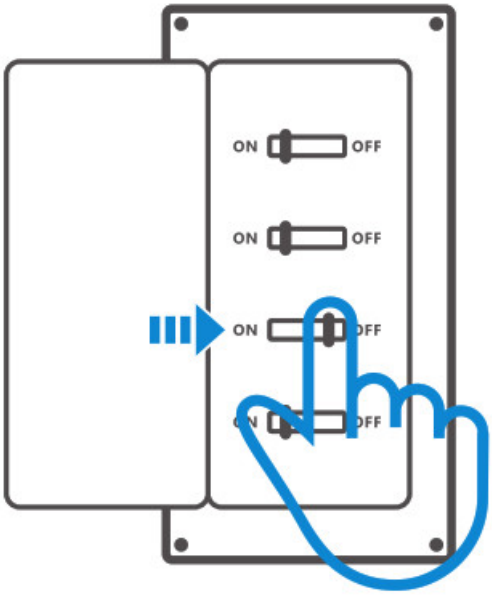

Please install and maintain the device by a professional electrician. To avoid electric shock hazards, do not operate any connection or contact the terminal connector after plugging in!

Wiring instruction

Light fixture wiring instruction

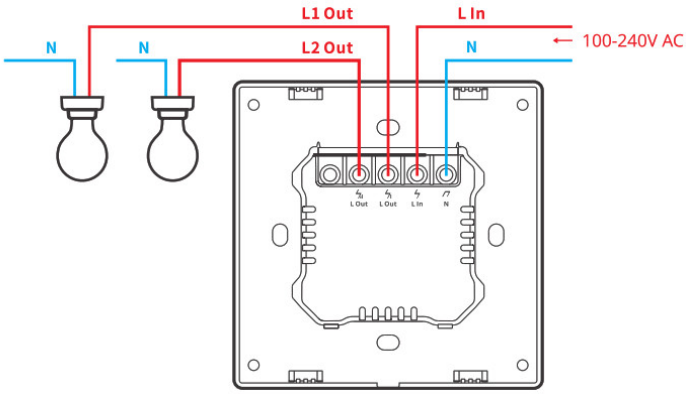

Make sure the neutral wire and live wire connection is correct.

Download the eWelink APP

http://app.coolkit.cc/dl.html

Power on

After powering on, the device will enter the Bluetooth Pairing Mode during the first use. The screen status is shown in the above image.

Add the Device

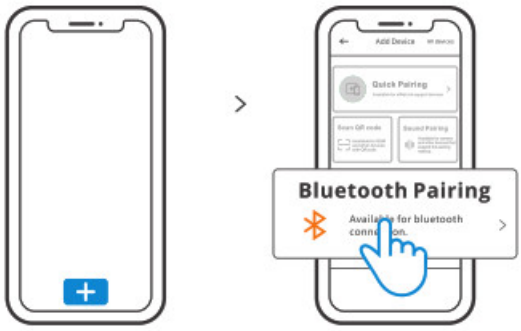

Tap “+” and select”Bluetooth Pairing”, then operate following the prompt on the APP.

LIKE IT!

Glad to know you are satisfied with SONOFF products. It would mean a lot to us if you can take a minute to share your buying experience.

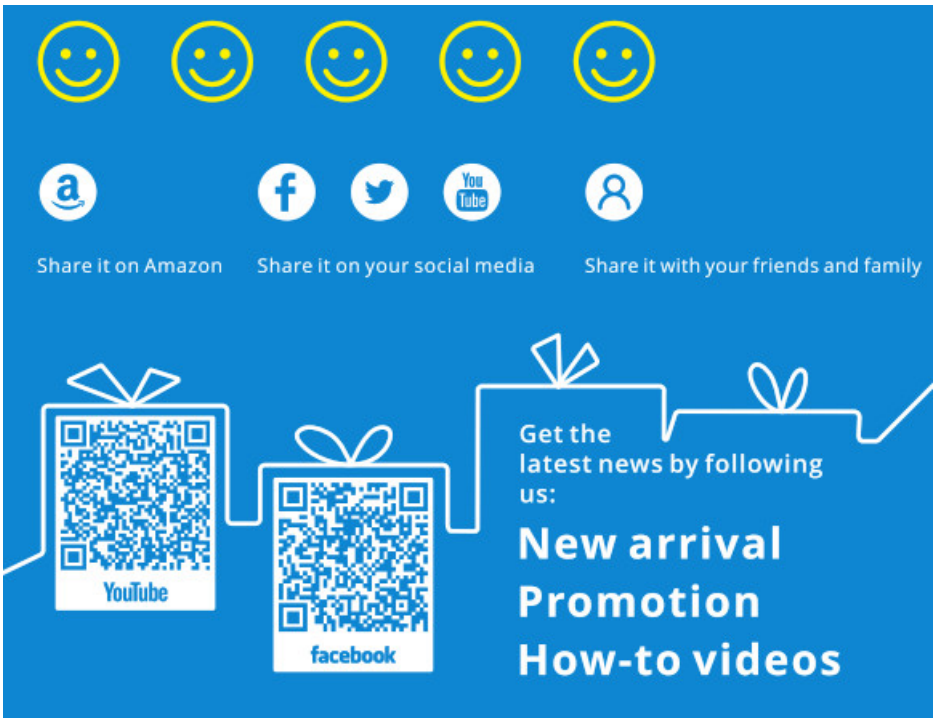

https://www.facebook.com/SONOFF.official/

HAVE A PROBLEM?
We are so sorry for the inconvenience caused by the product.
Please contact us for help via the email address below.

support@itead.cc

We will get back to you as soon as possible.

Operation Guide

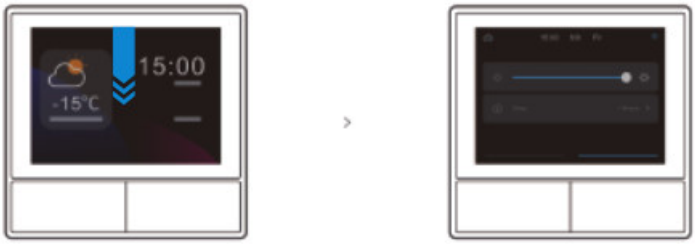

Dropdown (Settings of the screen brightness and sleep time)

Swipe right (After adding the temperature controller function in the APP, you can set the added temperature controller on the device.)
Swipe left (After adding widgets in the APP, you can control the added widgets on the device.)

User Manual

https://www.sonoff.tech/usermanuals

Scan the QR code or visit the website to learn about the detailed user manual and help.
Scan the QR code to read the voice control instruction for Amazon Echo and Google Home.

Hereby, Shenzhen Sonoff Technologies Co., Ltd. declares that the radio equipment type NSPanel-EU is in compliance with Directive 2014/53/EU. The full text of the EU declaration of conformity is available at the following internet address: **https://sonoff.tech/usermanuals**

Shenzhen Sonoff Technologies Co., Ltd.
1001, BLDG8, Lianhua Industrial Park, Shenzhen, GD,
China ZIP code: 518000
Website: **sonoff.tech**
MADE IN CHINA

Documents / Resources

	SONOFF NSPanel-EU Smart Scene Wall Switch [pdf] User Guide NSPanel-EU, Smart Scene Wall Switch