Manuals+ — User Manuals Simplified.

SHARP E328 Digital Signage Display User Manual

User's Manual
Digital Signage Display
MODEL:
E328/E438/E498/E558/E658

Contents

1 E328 Digital Signage Display
2 Important Information
3 Recommended Use & Maintenance
4 Installation
5 Parts Names and Functions
6 Connections
7 Basic Operation
8 Advanced Operation
9 External Control
10 Troubleshooting
11 Specifications
12 Trademark and Software License
13 External Resources
14 OSD Controls List
15 Manufacturer's Recycling and Energy Information
16 Documents / Resources
16.1 References
17 Related Posts

E328 Digital Signage Display

NOTE:

1. The contents of this manual may not be reprinted in part or whole without permission.
2. The contents of this manual are subject to change without notice.
3. Great care has been taken in the preparation of this manual; however, should you notice any questionable points, errors or omissions, please contact us.
4. The image shown in this manual is indicative only. If there is inconsistency between the image and the actual product, the actual product shall govern.
5. Notwithstanding articles (3) and (4), NEC will not be responsible for any claims on loss of profit or other matters deemed to result from using this device.
6. This manual is commonly provided to all regions so they may contain descriptions that are pertinent for other countries.

Cable Information
CAUTION:
Use the provided specified cables with this product so as not to interfere with radio and television reception.
For mini D-Sub 15-pin and USB, use shielded signal cables with ferrite core.
For the HDMI and AV cables, use shielded signal cables.
The use of other types of cables and adapters may cause reception problems.
FCC Information
WARNING: The Federal Communications Commission does not allow any modifications or changes to the unit EXCEPT those specified by NEC Display Solutions of America, Inc. in this manual. Failure to comply with this government regulation could void your right to operate this equipment.
This equipment has been tested and found to comply with the limits for a Class B digital device, pursuant to part 15 of the FCC Rules. These limits are designed to provide reasonable protection against harmful interference in a residential installation. This equipment generates, uses and can radiate radio frequency energy, and, if not installed and used in accordance with the instructions, may cause harmful interference to radio communications. However, there is no guarantee that interference will not occur in a particular installation. If this equipment does cause harmful interference to radio or television reception, which can be determined by turning the equipment off and on, the user is encouraged to try to correct the interference by one or more of the following measures:

- Reorient or relocate the receiving antenna.
- Increase the separation between the equipment and receiver.
- Connect the equipment to an outlet on a circuit different from that to which the receiver is connected.
- Consult the dealer or an experienced radio/TV technician for help.

If necessary, the user should contact the dealer or an experienced radio/television technician for additional suggestions.
The user may find the following booklet, prepared by the Federal Communications Commission, helpful: “How to Identify and Resolve Radio-TV Interference Problems.” This booklet is available from the U.S. Government Printing Office, Washington, D.C., 20402, Stock No. 004-000-00345-4.
SUPPLIER’S DECLARATION OF CONFORMITY
This device complies with Part 15 of FCC Rules. Operation is subject to the following two conditions. (1) This device may not cause harmful interference, and (2) this device must accept any interference received, including interference that may cause undesired operation.

FC	U.S. Responsible Party: Address: Tel. No.: Type of Product: Equipment Classification: Model:	NEC Display Solutions of America, Inc. 3250 Lacey Rd, Ste 500, Downers Grove, IL 60515 (630) 467-3000 Display Monitor Class B Peripheral E328, E438, E498, E558, E658

- The intended primary use of this product is as an Information Technical Equipment in an office or domestic environment.
- The product is intended to be connected to a computer and is not intended for the display of television broadcast signals.

NOTE FOR USERS IN U.K.
IMPORTANT
The wires in this mains lead are coloured in accordance with the following code:
BLUE: “NEUTRAL”
BROWN: “LIVE”
CONNECTING PLUG TO MAINS LEAD:
As the colours of the wires in the mains lead of this apparatus may not correspond with the coloured markings identifying the terminals in your plugs, proceed as follows:

- The wire which is coloured BLUE must be connected to the terminal which is marked with the letter N or coloured BLACK.
- The wire which is coloured BROWN must be connected to the terminal which is marked with the letter L or coloured RED.

CAUTION:
Do not connect the Live (BROWN) wire or the neutral (BLUE) wire to the earth terminal of your 3 pin mains plug.

Important Information

Safety Precautions and Maintenance
FOR OPTIMUM PERFORMANCE, PLEASE NOTE
THE FOLLOWING WHEN SETTING UP AND USING THE LCD COLOR MONITOR:
About the Symbols
To ensure safe and proper use of the product, this manual uses a number of symbols to prevent injury to you and others as well as damage to property. The symbols and their meanings are described below. Be sure to understand them thoroughly before reading this manual.

WARNING	Failing to heed this symbol and handling the product incorrectly could result in accidents l eading to major injury or death.
CAUTION	Failing to heed this symbol and handling the product incorrectly could result in personal i njury or damage to surrounding property.

Examples of symbols

	Indicates a warning or caution. This symbol indicates you should be careful of electric shocks.
	Indicates a prohibited action. This symbol indicates something that must be prohibited.
	Indicates a mandatory action. This symbol indicates that the power cord should be unplugged from the power outlet.

WARNING

1	UNPLUG THE POWER CORD	Unplug the power cord if the product malfunctions. Should the product emit smoke or strange odors or sounds, or if the product has been dropped or the cabinet broken, turn off the product's power, then unplug the power cord from the power outlet. Failure to do so could not only lead to fire or electric shock, it could also result in burn impairment. Contact your dealer for repairs. Never try to repair the product on your own. Doing so is dangerous.
2		Do not open or remove the product's cabinet. Do not disassemble the product. There are high voltage areas in the product. Opening or removing product covers and modifying the product may expose you to electric shock, fire, or other risks. Refer all servicing to qualified service personnel.
3		Do not use the product if it has structural damage. If you notice any structural damage such as cracks or unnatural wobbling, please refer servicing to qualified service personnel. If the product is used in this condition, the product may fall or cause personal injury.
4		Handle the power cord with care. Damaging the cord could lead to fire or electric shock. • Do not place heavy objects on the cord. • Do not place the cord under the product. • Do not cover the cord with a rug, etc. • Do not scratch or modify the cord. • Do not bend, twist or pull the cord with excessive force. • Do not apply heat to the cord. Should the cord be damaged (exposed core wires, broken wires, etc.), ask your dealer to replace it.
5		Do not touch the power plug if you hear thunder. Doing so could result in electric shock.
6		Please use the power cord provided with this product in accordance with the power cord table. If a power cord is not supplied with this product, please contact NEC. For all other cases, please use the power cord with the plug style that matches the power socket where the product is located. The compatible power cord corresponds to the AC voltage of the power outlet and has been approved by, and complies with, the safety standards in the country of purchase.
7		For proper installation it is strongly recommended to use a trained service person. Failure to follow the standard installation procedures could result in damage to the product or injury to the user or installer.

8		Please install the product in accordance with the following information. This product cannot be used or installed without the wall mount or other mounting acc essory for support. When transporting, moving, or installing the product, please use as many people (two or more people for the E328/E438/E498/E558 and four or more people for the E658) as necessary to be able to lift the product without causing personal injury or damage t o the product. Please refer to the instructions included with the optional mounting equipment for det ailed information about attaching or removing. Do not cover the vent on the product. Improper installation of the product may result i n damage to the product, an electric shock or fire. Do not install the product in the locations below: • Poorly ventilated spaces. • Near a radiator, other heat sources, or in direct sunshine. • Continual vibration areas. • Humid, dusty, steamy, or oily areas. • Outdoors. • High-temperature environment where humidity changes rapidly and condensation is likely to occur. • A ceiling or wall that is not strong enough to support the product and mounting acce ssories. Do not mount the product upside down.

9		Prevent tipping and falling for earthquakes or other shocks. To prevent personal injury or damage to the product caused by tipping over due to ea rthquakes or other shocks, make sure to install the product in a stable location and ta ke measures to prevent falling. The measures to prevent falling and tipping are intended for reducing the risk of injur y, but may not guarantee the effectiveness against all earthquakes. The product may tip causing personal injury. • Use commercially-available clamps and screws (M6) to secure it to the product. • Be sure to remove the cord or chain from the wall before moving the product to prev ent personal injury or damage to the product. The product may fall causing personal injury. • Do not attempt to hang the product using an installation safety wire. • Please install the product in an area on the wall or ceiling strong enough to support t he weight of the product. • Prepare the product using mounting accessories, such as hook, eyebolt, or mountin g parts, and then secure the product with a safety wire. The safety wire must not be ti ght. • Please make sure the mounting accessories are strong enough to support the produ ct weight and size before installing it. Stability Hazard. The product may fall, causing serious personal injury or death. To prevent injury, this product must be securely attached to the floor/wall in accordance with the installation instructions. Many injuries, particularly to children, can be avoided by taking simple precautions su ch as: • ALWAYS use wall mount or installation methods recommended by the manufacturer of the product set. • ALWAYS use furniture that can safely support the product. • ALWAYS ensure the product is not overhanging the edge of the supporting furniture. • ALWAYS educate children about the dangers of climbing on furniture to reach the pr oduct or its controls. • ALWAYS route cords and cables connected to your product so they cannot be trippe d over, pulled or grabbed. • NEVER place a product in an unstable location. • NEVER place the product on tall furniture (for example, cupboards or bookcases) wi thout anchoring both the furniture and the product to a suitable support. • NEVER place the product on cloth or other materials that may be located between t he product and supporting furniture. • NEVER place items that might tempt children to climb, such as toys and remote con trols, on the top of the product or furniture on which the product is placed. If the existing product is going to be retained and relocated, the same considerations as above should be applied.
10		Do not insert objects of any kind into the cabinet slots. It may cause electric shock, fir e, or product failure. Keep objects away from children and babies.
11		Do not spill any liquids into the cabinet or use your product near water. Immediately turn off the power and unplug your product from the wall outlet, then refe r servicing to qualified service personnel. It may cause an electric shock or start a fire .
12		Do not use flammable gas sprays to remove dust when cleaning the product. Doing s o could lead to a fire.

CAUTION

1		Handling the power cord. Handle the power cord with care. Damaging the cord could lead to fire or electric shock. • When connecting the power cord to the product's AC IN terminal, make sure the co nnector is fully and firmly inserted. • Fasten the power cord to the product by attaching the clamp to prevent loose connection. • Do not connect or disconnect the power cord with wet hands. • When connecting or disconnecting the power cord, pull the power cord out by holdi ng onto its plug. • When cleaning the product, for safety purposes, unplug the power cord from the po wer outlet beforehand. Regularly dust off the power cord by using a soft dry cloth. • Before moving the product, make sure the product power is off, then unplug the po wer cord from the power outlet and check that all cables connecting the product to ot her devices are disconnected. • When you are not planning to use the product for an extended period of time, alwa ys unplug the power cord from the power outlet.
2		Do not bind the power cord and the USB cable. It may trap heat and cause a fire.
3		Do not connect to a LAN with excessive voltage. When using a LAN cable, do not connect to a peripheral device with wiring that migh t have excessive voltage. Excessive voltage on the LAN port may cause an electric s hock.
4		Do not climb on the table where the product is installed. Do not install the product on a wheeled table if the wheels on the table have not been properly locked. The product may fall, causing damage to the product or personal injury.
5		Installation, removal, and height adjustment of the optional wall mount. • When installing the wall mount, handle the unit with care to avoid pinching your fing ers.
6		Do not push or climb on the product. Do not grab or hang onto the product. The product may fall, causing damage to the product or personal injury.
7		Do not impact the LCD panel surface, it can cause serious damage to the product or personal injury.
8		Incorrect usage of batteries can result in leaks or bursting. • Insert batteries matching the (+) and (–) signs on each battery to the (+) and (–) sig ns of the battery compartment. • Do not mix battery brands. • Do not combine new and old batteries. This can shorten battery life or cause liquid leakage of batteries. • Remove dead batteries immediately to prevent battery acid from leaking into the battery compartment. • Do not touch exposed battery acid, it may injure your skin. • Disposal of a battery into fire or a hot oven, or mechanically crushing or cutting of a battery, can result in an explosion. • Leaving a battery in an extremely high temperature surrounding environment, or a battery subject to extremely low air pressure, can result in an explosion or the leakage of flammable liquid or gas. • Contact your dealer or local authorities when disposing of batteries.
9		Suitable for entertainment purposes at controlled luminous environments, to avoid di sturbing reflections from the screen.
10		We recommend wiping clean the ventilation holes a minimum of once a month. Failu re to do so could lead to fire or electric shock or damage to the product.

11		To ensure the product's reliability, please clean the ventilation holes at the rear side of the cabinet at least once a year to remove dirt and dust. Failure to do so could lea d to fire or electric shock or damage to the product.

CAUTION

Please use the power cord provided with this display in accordance with the table below. If a power cord is not supplied with this equipment, please contact your supplier. For all other cases, please use a power cord that matches the AC voltage of the power outlet and has been approved by and complies with the safety standard of your particular country.

Plug Type	North America	European Continent al	U.K.	Japanese
Plug Shape		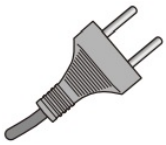	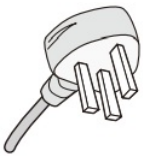	
Region	U.S.A./Canada	EU (except U.K.)	U.K.	Japan
Voltage	120(V)	230(V)	230(V)	100(V)

This display operates on 100-240 volts 50-60 Hz, AC current. Insert the power cord into a 100-240 volts 50-60 Hz outlet. The mains plug is used as the disconnect device and shall remain readily operable.

Recommended Use & Maintenance

Recommended Use
Ergonomics
To realize the maximum ergonomic benefits, we recommend the following:

- For optimum performance of the monitor, allow 20 minutes for warming up. Avoid reproduction of still patterns on the monitor for long periods of time to avoid image persistence (after image effects).
- Rest your eyes periodically by focusing on an object at least 5 feet away. Blink often.
- Position the monitor at a 90° angle to windows and other light sources to minimize glare and reflections.
- Adjust the monitor's brightness, contrast and sharpness controls to enhance readability.
- Get regular eye checkups.
- Use the preset Size and Position controls with standard input signals.
- Use the preset color settings.
- Use non-interlaced signals.
- Do not view the primary color blue on a dark background. It is difficult to see and may cause eye fatigue due to insufficient contrast.

Maintenance
Cleaning the LCD Screen

- When the LCD screen is dusty, please gently wipe with a soft cloth.
- Clean the LCD screen surface with a lint-free, non-abrasive cloth. Avoid using any cleaning solution or glass

cleaner!

- Please do not rub the LCD screen with a hard or abrasive material.
- Please do not apply pressure to the LCD screen surface.
- Please do not use OA cleaner as it will cause deterioration or discoloration on the LCD screen surface.

Cleaning the Cabinet

- Unplug the power supply.
- Gently wipe the cabinet with a soft cloth.
- To clean the cabinet, dampen the cloth with a neutral detergent and water, wipe the cabinet and follow with a dry cloth.

NOTE: DO NOT clean with benzene thinner, alkaline detergent, alcoholic system detergent, glass cleaner, wax, polish cleaner, soap powder, or insecticide. Rubber or vinyl should not be in contact with the cabinet for an extended period of time. These types of fluids and materials can cause the paint to deteriorate, crack or peel.
NOTE: Continuous operating time and warranty.
This product is designed for a maximum daily use of 16 hours. Continual use in excess of 16 hours per day is not covered by the warranty.

Installation

NOTE:
For box contents, please refer to the Setup Manual.
Product warranty does not cover damage caused by improper installation.

Setup Overview

1. Determine the installation location

   WARNING: Please refer to “WARNING 7”, “WARNING 8”, “WARNING 9”, and “WARNING 11”.

   NOTE: To avoid scratching the LCD panel, always place a soft cloth, such as a blanket that is larger than the monitor’s screen area, on the table before laying the monitor face down when installing the mounting accessories.

2. Install the remote control batteries

   The remote control is powered by two 1.5 V AAA batteries.

   To install or replace **batteries:**

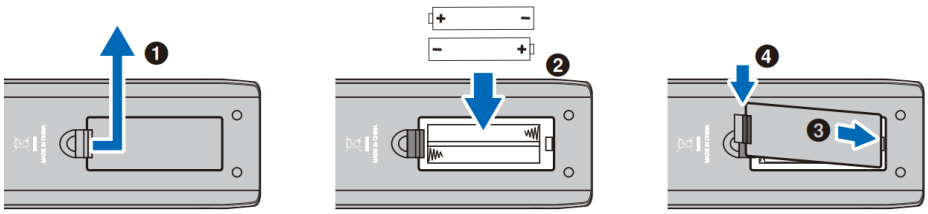

   CAUTION: Please refer to “CAUTION **8”.**

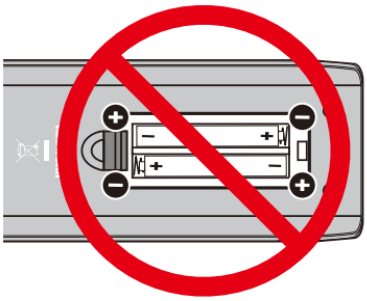

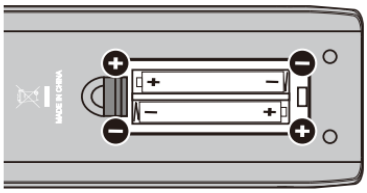

NOTE:

• The batteries supplied with the remote control may become empty quickly depending on their condition. Therefore, replace them with new batteries early.

• If you do not intend to use the remote control for a long period of time, remove the batteries.

3. Connect external equipment

• To protect the external equipment, disconnect the power cord of the monitor before making connections.

• Refer to the user's manual of your equipment for further information.

NOTE: Do not connect or disconnect cables when the monitor's main power or other external equipment's power is turned on.

4. Connect the supplied power cord

NOTE:

• Make sure that enough power is supplied to the monitor. Refer to "Power Supply" in the specification.

• Connect the power cord to the monitor before plugging it into the power outlet.

1. Connect one extremity of the power cord to the power input terminal of the monitor.

Plug it completely inside.

⚠ **CAUTION:** Please refer to "CAUTION 1"and "CAUTION 2".

2. Connect the power plug to an AC power **outlet.**

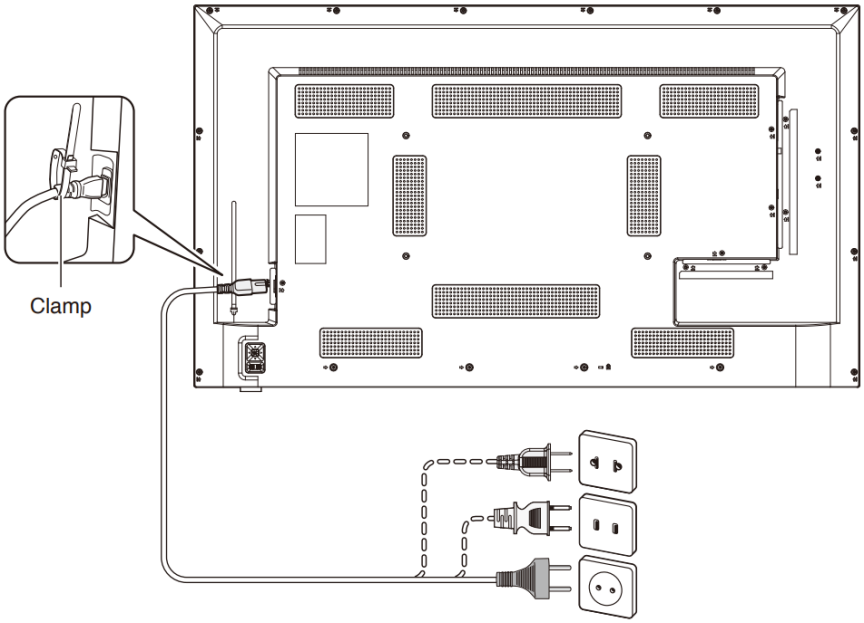

⚠ **WARNING:** Please refer to "WARNING 4", "WARNING 5", "WARNING 6", and "WARNING 7".

NOTE: The monitor should be installed close to an easily accessible power outlet.

5. Cable information

CAUTION: Use the provided specified cables with this product so as not to interfere with radio and television reception.

For mini D-Sub 15-pin and USB, use shielded signal cables with ferrite core.

For the HDMI and AV cables, use shielded signal cables.

The use of other types of cables and adapters may cause reception problems.

6. Turn the power button on

   Switch on the monitor power before turning the computer or external equipment on.

7. Operate the connected external equipment

   Select the input source for the monitor to display the video from the external equipment on the screen.

8. Adjust the sound

   Make volume adjustments when required.

9. Adjust the picture settings

   • When using video input terminals (HDMI1, HDMI2, HDMI3, Media Player), adjustment is not required.

   • When using an HDMI input terminal, select the appropriate setting between [Mode 0], [Mode 1], and [Mode 2] in [EDID] under [HDMI Settings] in the [Setup] OSD menu.

10. For long-term use

    The backlight used for this monitor has a limited life and its brightness decreases with the usage time.

    Also, if the same still image is shown for a long time, “Image Persistence” may occur. “Image Persistence” is a phenomenon in which the image of an LCD remains visible after the image has been changed.

    The “Image Persistence” is gradually eliminated by changing the screen, but if the same screen is shown for too long, the “Image Persistence” will not disappear.

    To avoid shortening the monitor’s lifetime, consider the following:

    • Turn off the main power of the monitor when not in use.

    • Use the ⏻ button on the main unit or the ⏻ button on the remote control to put the monitor in standby mode.

    • If you cover the panel surface of the main unit with a protective cover made of glass or acrylic, the panel surface will be sealed and the internal temperature will rise.

    Use the computer’s power management function or reduce the monitor’s brightness to prevent the internal temperature from rising.

    • Use [Schedule] in the OSD menu to automatically turn the monitor on or in standby mode as required.

    NOTE: When using the schedule function, be sure to set [Current Time settings] in the [Schedule] OSD menu.

11. Remote control sensor

    Be careful not to damage the remote control sensor during installation.

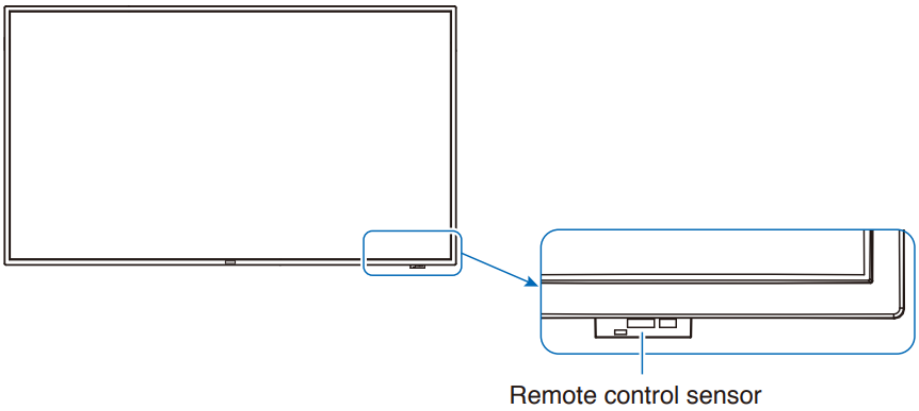

Mounting (for Customer)

⚠ **WARNING:** Please refer to “WARNING 7”, “WARNING 8”, “WARNING 9”, and “WARNING 11”.
Contact your supplier as they may be able to provide a list of qualified installation professionals. Mounting the product on a wall or ceiling and hiring a technician are the customer’s responsibility.

Maintenance

- Periodically check for loose screws, gaps, distortions, or other problems that may occur with the mounting equipment. If a problem is detected, refer to the qualified personnel or the supplier for service.
- Depending on the environment, the mounting location may weaken due to natural degradation. Regularly ask the qualified personnel to inspect the mounting location and carry out maintenance.

NEC Display Solutions assumes no responsibility regarding any damage that may be caused by inadequate installation, misuse, modification of the product, natural disasters, or other such causes.
When asking the qualified personnel for installation, inform them of the precautions mentioned in “Mounting (for Trained Installers)”.

Prevent Falling

⚠ **WARNING:** Please refer to “WARNING 7” and “WARNING 9”.

E658/E558

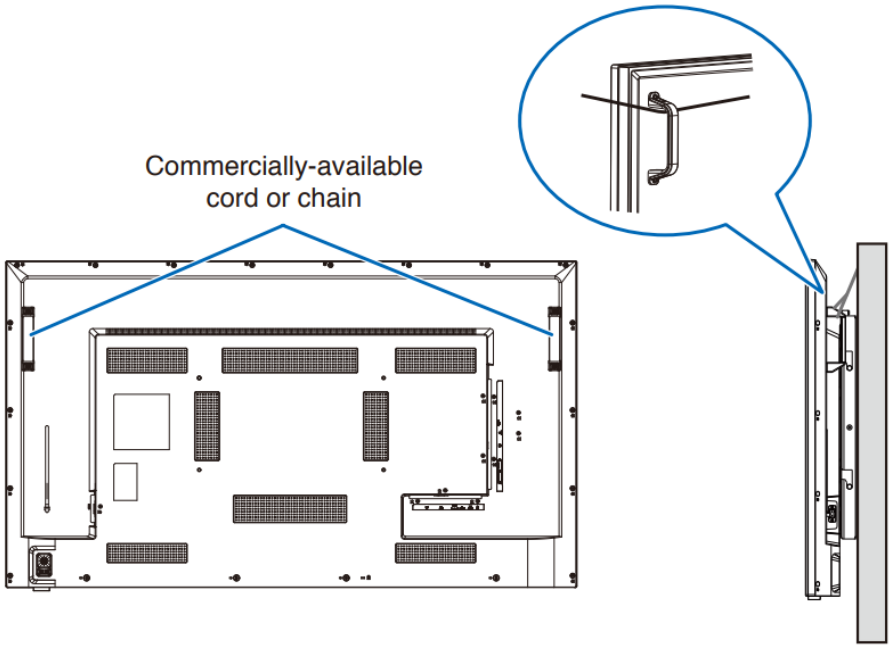

Mounting (for Trained Installers)

Carefully inspect the location where the unit is to be mounted. Not all walls or ceilings are capable of supporting the weight of the monitor.
The weight of this monitor is provided in the specifications.
The product warranty does not cover damage caused by improper installation, re-modeling, or natural disasters.
Failure to comply with these recommendations could result in voiding the warranty.
Pay attention not to obstruct the air vents with the mounting brackets.

Mounting bracket

WARNING Please refer to the “Important Information” section.

- When using commercially-available mounting brackets, make sure that they comply with the VESA Flat Display Mounting Interface Standard (FDMI).
- Check that the surface where the brackets will be attached is strong enough.
- Choose commercially-available mounting brackets strong enough to support the weight of the monitor.
- Prior to mounting, inspect the installation location to ensure that it is strong enough to guaranty safety.
- Pay attention not to obstruct part of the air vents of the monitor with the brackets.
- For detailed information, refer to the instructions included with the mounting equipment.
- There are 4 installation holes on the back. Mount the monitor evenly at the four locations.
  (See “Mounting on Walls or Ceilings” for recommended installation examples.)
- Use screws of the sizes mentioned below to fix the brackets to the monitor. Tighten the screws securely.

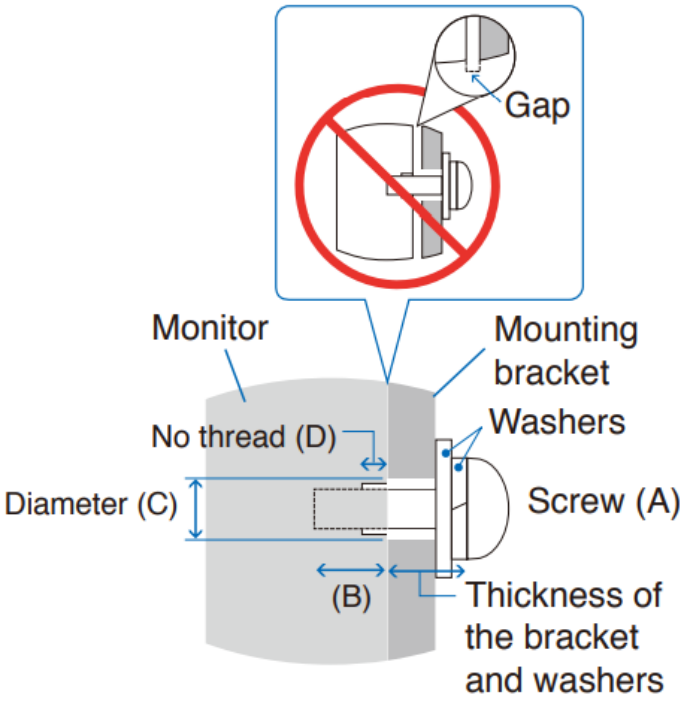

	Screw Size		Bracket Hole	No Thread	Recommended Faste n Force
	(A)	(B)	(C)	(D)	
E328	M6	13-15 mm	≤ Ø 8.5 mm	2.3 mm	390-520 N•cm
E438				4 mm	
E498					
E558					
E658				4.5 mm	

NOTE: When used in a video wall configuration for a long time, a slight expansion of the monitors may happen due to temperature changes. It is recommended that a gap of over one millimeter is kept between adjacent monitor edges.

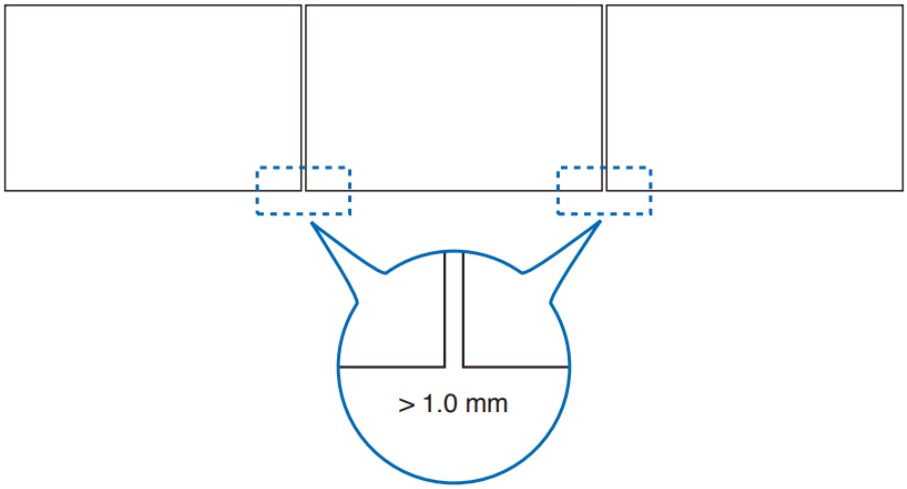

Installing a safety wire

When installing the monitor to a wall or a ceiling, use commercially-available wall or ceiling mounting brackets, but

also a safety wire.

⚠ **WARNING:** Please refer to “WARNING 9”.

⚠ **CAUTION:** Please refer to “CAUTION 7”.

When attaching the safety wire to the monitor’s handle, use the handle locations shown in the figure below.
(Fasten Force: 120 – 190 N•cm)

Possible locations for the handles used to attach the safety wire

Attach the safety wire to the handles shown in the figure below.

E658/E558

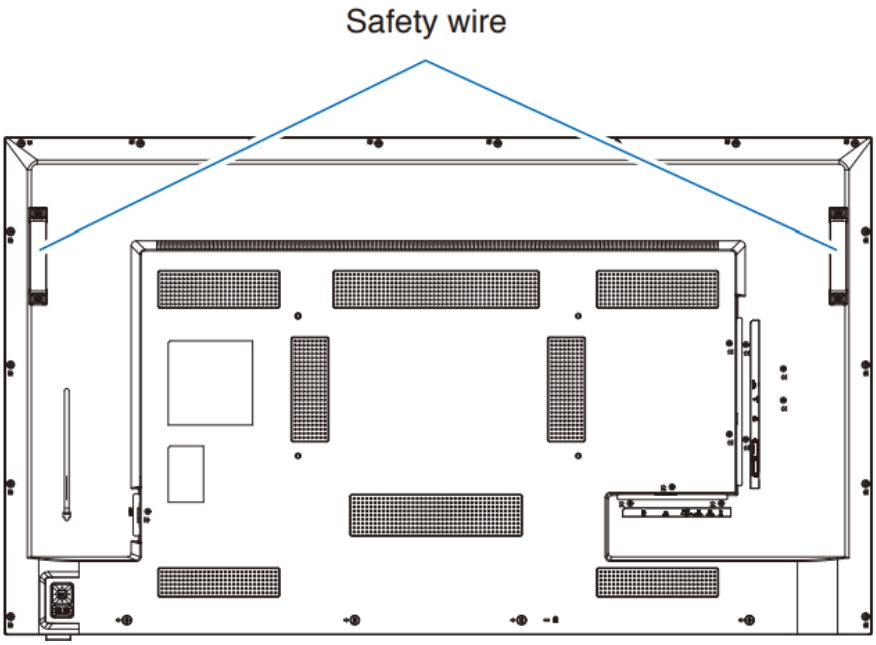

Mounting Location

⚠ **WARNING:** Please refer to “WARNING 8”.

NOTE: Allow for adequate ventilation or provide air conditioning around the monitor, so that heat can properly dissipate away from the monitor and from the mounting equipment.

Orientation

The monitor cannot be used in the portrait orientation.

⚠ **WARNING:** Do not install it in the portrait orientation.

Otherwise, it may cause a malfunction.

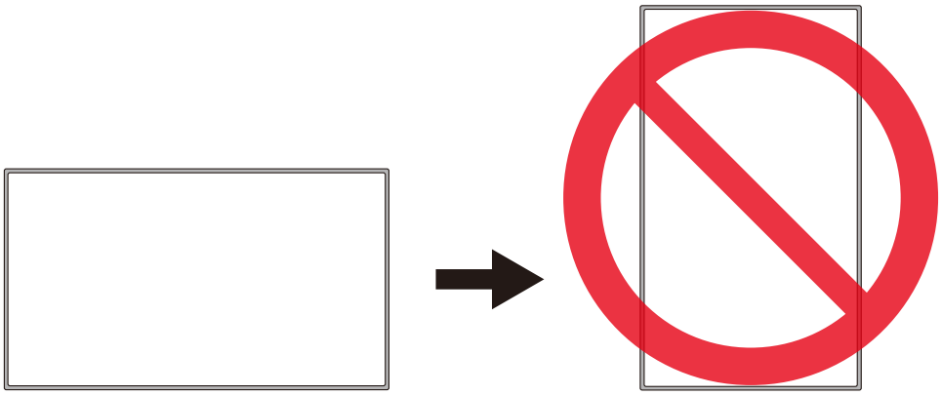

⚠ **WARNING:** Do not install the monitor upside down.

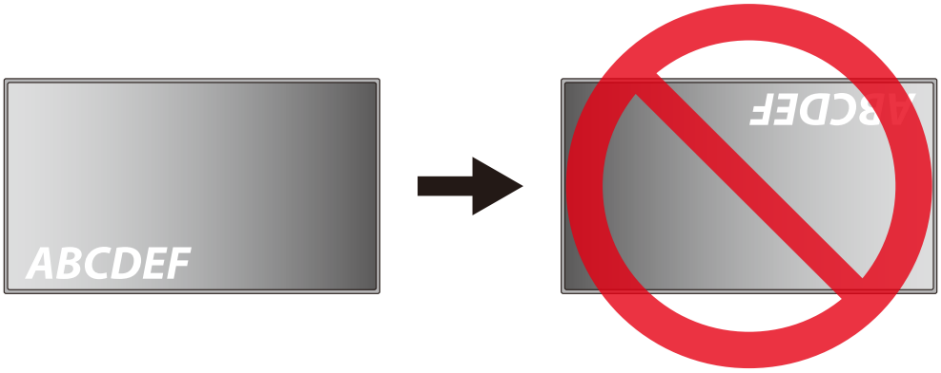

The monitor cannot be used when inclined 10° or more.

⚠ **WARNING:** Installing the monitor at an angle of 10° or more may cause a malfunction.

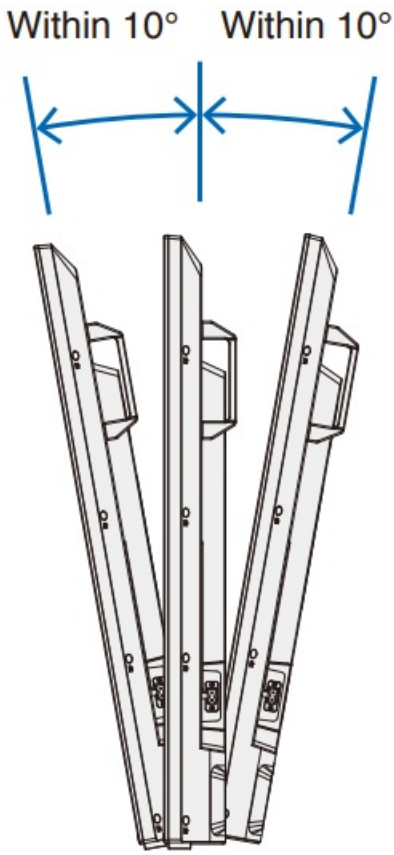

Ventilation Requirements

When mounting the monitor in an enclosed space or recessed area, leave adequate room between the monitor and the enclosure to allow heat to disperse, as shown below.

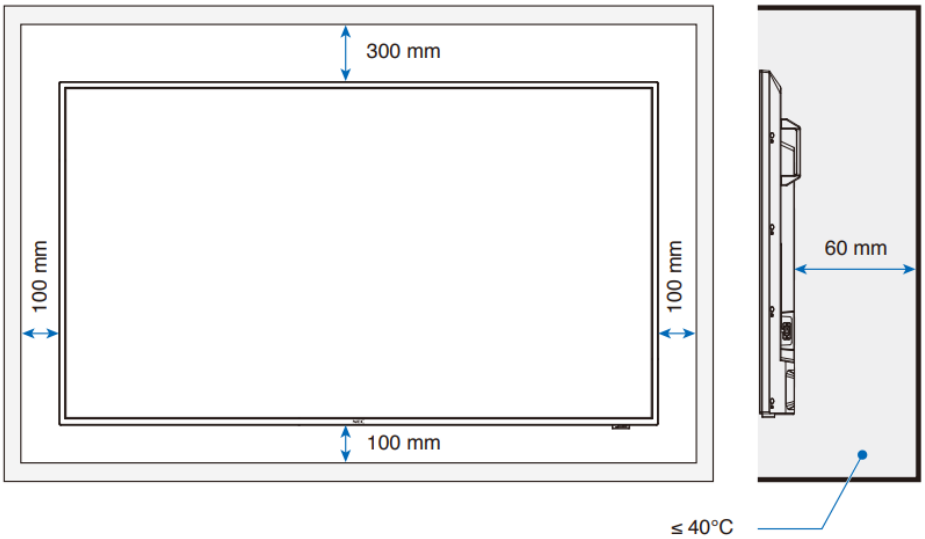

NOTE: The maximum environmental operating temperature of the monitor is 40 °C.
This monitor has internal temperature sensors.
NOTE: If the monitor overheats, a “Warning” appears. If a “Warning” appears, stop using the monitor, turn off the power and allow it to cool.
For more information on this function, see “Thermal Management” (page 77).
If the monitor is used in an enclosed area or if the LCD panel is covered with an acrylic protective sheet, check the temperature around the monitor.

Mounting on Walls or Ceilings
Precautions when mounting the monitor on a wall or a ceiling

⚠ **WARNING:** Please refer to “WARNING 9”.
Be sure to read this section before mounting the monitor on a wall or a ceiling to guarantee safety.

- It may not be possible to mount the monitor on some walls or ceilings depending on their structure or strength. Ask the qualified personnel or the supplier to check the mounting location.

Installation method

⚠ **WARNING:** Please refer to “WARNING 8”.

1. Place a soft cloth on the table or another flat location where the monitor will be laid.

   NOTE:

   • Make sure that the surface where you will lay the monitor is larger than the monitor screen.

   • When installing, do not apply excessive force to any part of the monitor by pushing or leaning on it. This may deform the monitor.
2. Place the monitor on top of the soft cloth.
3. Install the commercially-available mounting brackets.

E658/E558

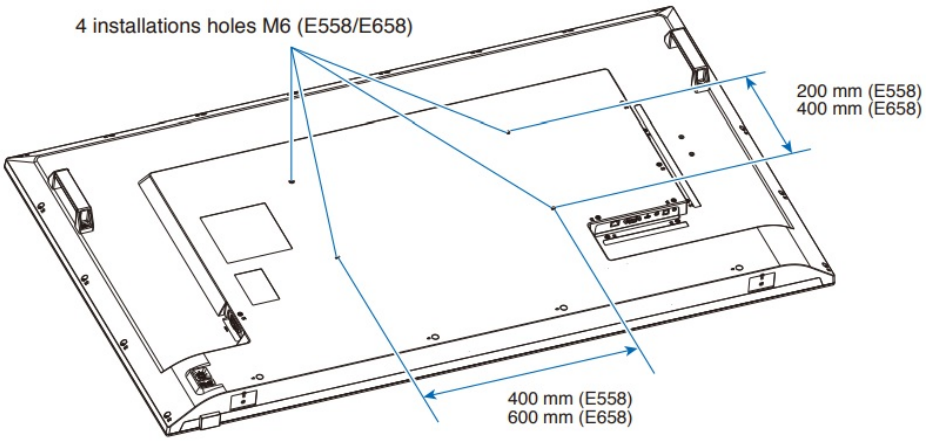

E498/E438/E328

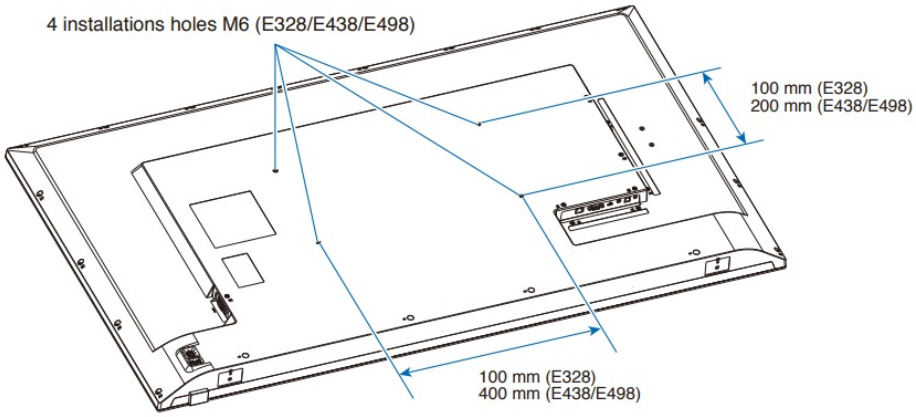

Attaching Mounting Accessories

The monitor is designed for use with the VESA mounting system.

Mounting accessories can be attached with the monitor in the face down position.

To avoid scratching the LCD panel, always place a soft cloth, such as a blanket that is larger than the monitor's screen area, on the table before laying the monitor face down.

Make sure there is nothing on the table that can damage the monitor.

NOTE:

Prior to installation, place the monitor face down on a flat even surface that is larger than the monitor screen.

Use a sturdy table that can easily support the weight of the monitor.

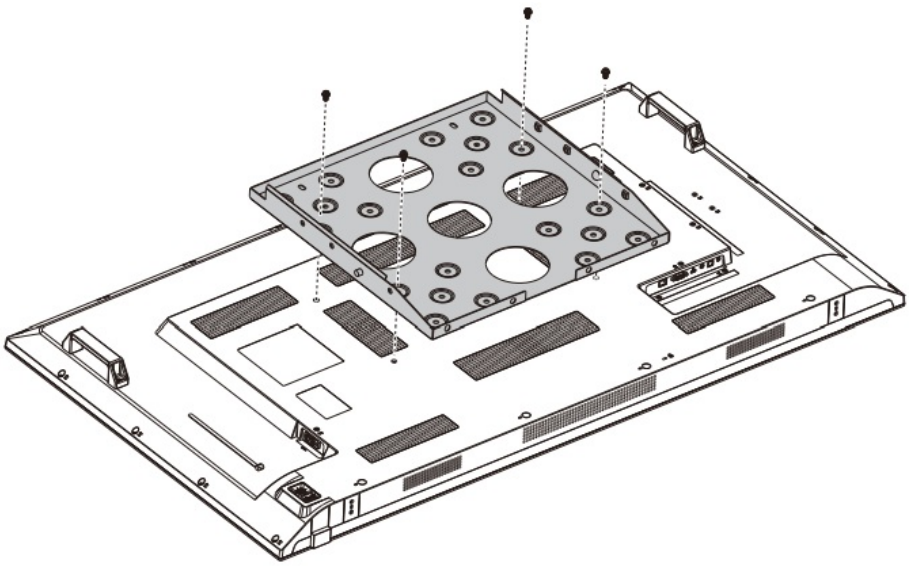

NOTE: For use only with GS approved wall mount bracket.

Parts Names and Functions

Control Panel

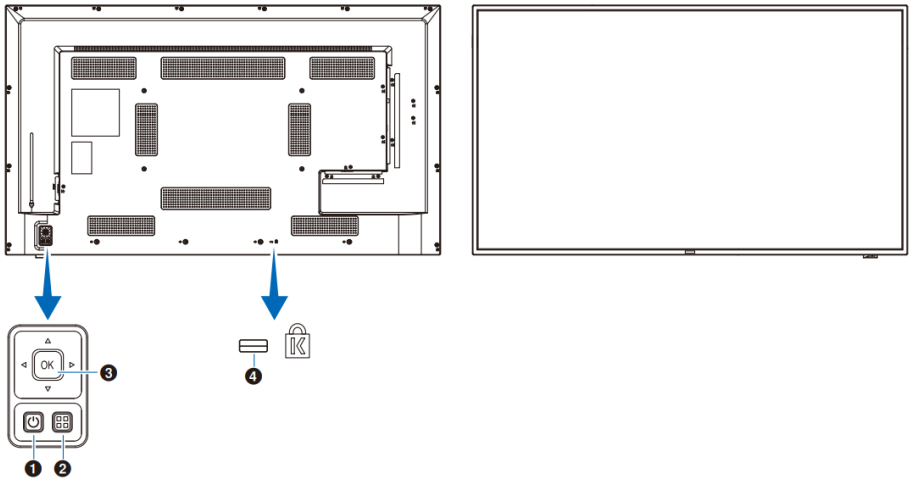

1. Button (power button)

   Switches between power on and standby.
2. MENU/EXIT Button

   Opens the OSD menu when the OSD menu is closed.

   Returns to the previous OSD menu when the OSD menu is open.
3. Arrow Keys/SET Button (input switch button)

   Central/SET: Operates as the setting button to execute the function selected when the OSD menu is open.

   Left/Right: Move to the right or left of the OSD control menu.

   Moving the left/right keys left and right increases or decreases the adjustment values.

   Up/Down: Move up and down in the OSD control menu.

   Pressing the left/right keys when the OSD menu is closed directly adjusts the volume.
4. Security Slot

Terminal Panel

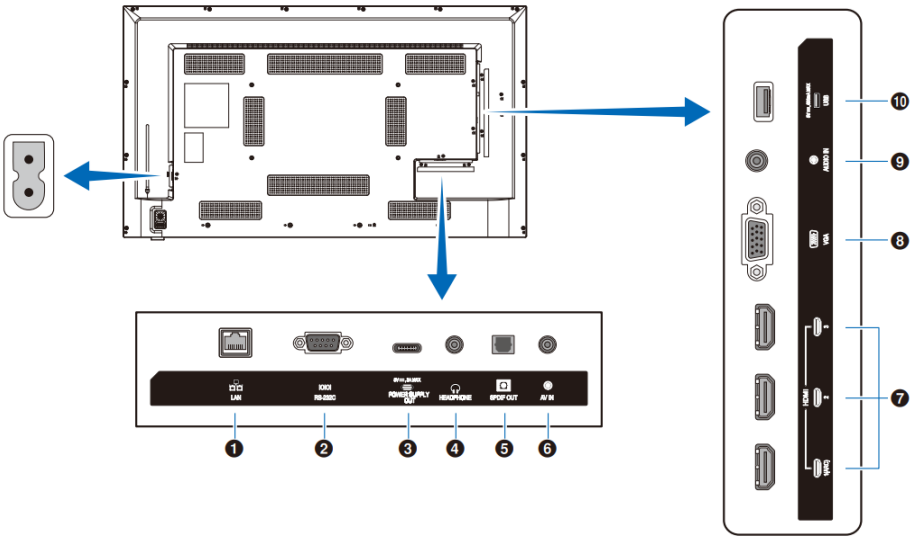

1. LAN port (RJ-45)

Use the HTTP server function and a Web browser on a computer to manage the LAN settings of the monitor.

NOTE: The LAN port of the monitor is not intended to be connected directly to a public network (including via routers rented by an Internet service provider). This is the reason why connecting the wired LAN port directly to a public network is forbidden according to the Telecommunications Business Act.

2. RS-232C input terminal (D-sub)

   For connection to a computer. Receives control commands from the computer.

3. USB Type-C port (power supply 5 V/ 3 A)

   Check the shape of the connectors when connecting a USB cable. When supplying power via the USB Type-C port, use a USB cable supporting 3 A.

   Do not tie the USB cable. Otherwise, it may cause overheating or fire.

4. HEADPHONE terminal (stereo mini jack)

   Outputs the selected audio signal.

5. Digital audio output terminal

   For connection to an audio device equipped with a digital audio input terminal.

6. AV input terminal

   For connection to a video output terminal (composite) of a video player or other devices.

7. HDMI input terminals (HDMI1 (ARC)/HDMI2/HDMI3)

   For connection to devices with digital video interface complying with the HDMI standard. HDMI1 terminal also supports ARC (Audio Return Channel) for audio output. Connect an HDMI cable supporting ARC to this terminal.

   Connect audio devices supporting ARC to the HDMI1 (ARC) terminal.

   NOTE: ARC sends the monitor's sound to the audio equipment from the HDMI1 ARC terminal. Use the included ARC-supported HDMI cable. The audio equipment supporting ARC, such as AV amplifiers, will output the monitor's audio. The volume and other functions of the audio equipment can be controlled with the included remote control.

8. VGA input terminal

   For connection to the video output terminal (analog) of a computer.

   When connecting the monitor to the video output terminal (component) of a video player or another device, go to [Setup] in the OSD menu -> [VGA Options] -> [VGA Mode], and select [YPbPr].

9. Audio input terminal (stereo mini jack)

   For connection to the audio output terminal of a computer or another device.

10. USB Type-A port

    Can be used to display photos (still images) and play video and music files stored in a USB storage device.

    Check the shape of the connectors when connecting a USB storage device or USB cable.

Wireless Remote Control

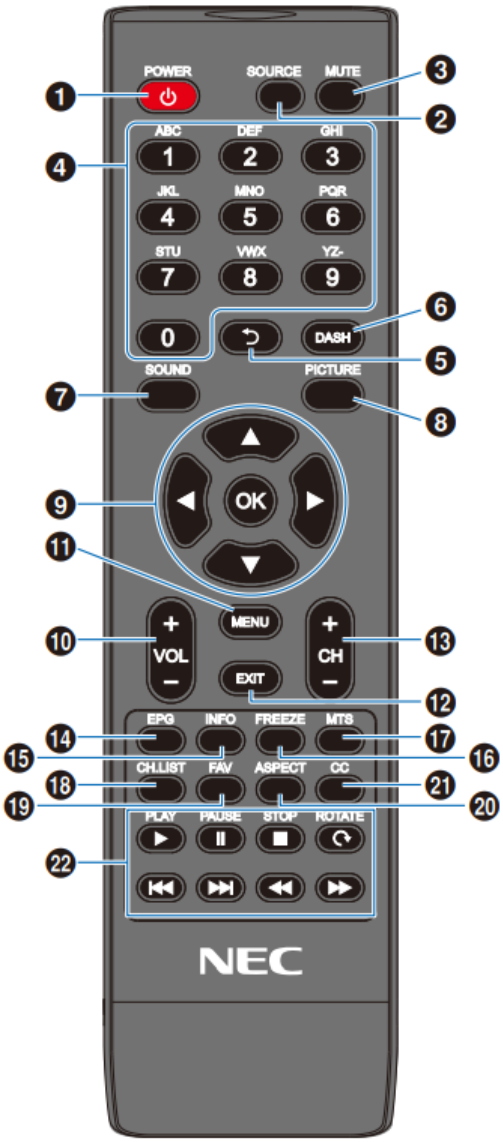

1. POWER Button

   Switches between power on and off (standby).

   NOTE: To completely turn the power off, disconnect the power plug from the outlet.

2. SOURCE Button

   Cycles through the available inputs.

   The input names are shown as their factory preset name.

3. MUTE Button

   Silences the audio signal. Press the button again to restore the previous volume.

4. Keypad

   Press the buttons to enter numerical values, such as the passwords.

5. Button

   Not used with this monitor.

6. DASH Button

   Not used with this monitor.

7. SOUND Button

   Selects the sound mode.

   Available sound modes are [Standard], [Music], [Movie], and [Custom].

8. PICTURE Button

Selects the picture mode.

Available picture modes are [Dynamic], [Standard], [Energy Savings], [Conferencing], [HighBright], [Custom], and [HDR Video].

9. ▲, ▼, ◀, ▶, OK (cursor buttons)

   Used to navigate inside and select the menus.

10. VOL- Button (volume minus button)

    VOL+ Button (volume plus button)

    Increases or decreases the audio output level.

11. MENU Button

    Opens and closes the OSD menu.

12. EXIT Button

    Closes the OSD menu.

13. CH- Button

    CH+ Button

    Not used with this monitor.

14. EPG Button

    Not used with this monitor.

15. INFO Button

    Shows/Hides the information OSD.

16. FREEZE Button (still image button)

    Turns the still image function on/off.

17. MTS Button

    Not used with this monitor.

18. CH.LIST Button

    Not used with this monitor.

19. FAV Button

    Not used with this monitor.

20. ASPECT Button

    Selects the aspect ratio of the image between [Normal], [1:1], [Full], and [Zoom].

21. CC Button

    Not used with this monitor.

22. PLAY, PAUSE, STOP, ROTATE, ⏮, ⏭, ◀◀, ▶▶ (navigation buttons)

    Used to operate the media player functions and the HDMI CEC function.

Connections

Before making connections:

- Turn off the power of the monitor, the computer and the external equipment before connecting the monitor to the computer.
- Refer to the externals equipment's user manuals for available connection types and instructions for each piece of equipment.

NOTE:

- When the audio output connector of the connected audio device or computer is a stereo mini jack, use an audio cable without a resistor.
- Using an audio cable with a built-in resistor may make it impossible to increase the volume or mute the sound.
- We recommend turning off the monitor's main power before connecting or disconnecting a USB storage device.
- Do not connect or disconnect cables when the monitor's main power or other external equipment's power is turned on.

Wiring Diagram

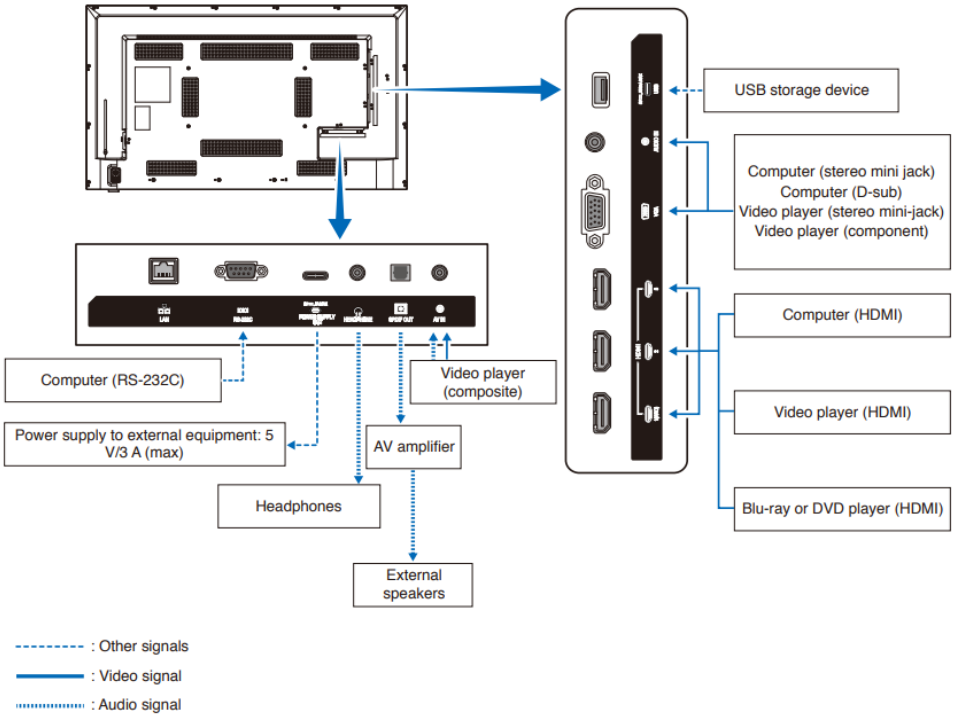

NOTE: When connecting the product to the video output connector (component) of a video player or another device, go to [Setup] in the OSD menu -> [VGA Options] -> [VGA Mode], and select [YPbPr].

Headphones Connection

When using headphones, connect them to the HEADPHONE terminal of the monitor.

⚠ **CAUTION:** Do not connect the headphones while wearing them.
Otherwise, your ears may be injured depending on the sound volume.

NOTE:

- Headphones with a stereo mini jack plug can be connected to the monitor. If the plug of your headphones is too large to enter the connector, buy a 6.35 mm stereo jack plug to stereo mini jack plug adapter in your audio store.
- The sound from the speakers is muted when headphones are connected.
- Adjustment of the volume control as well as the equalizer to other settings than the center position may increase the ear-/headphones output voltage and therefore the sound pressure level.

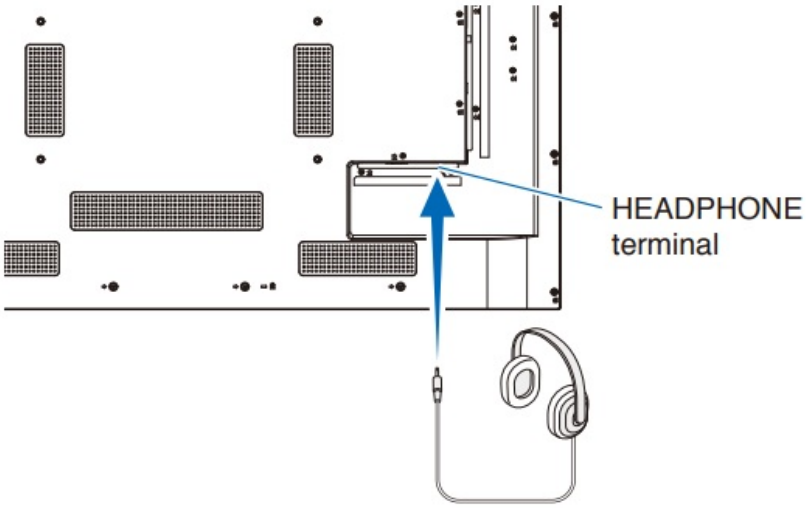

Connecting to a Personal Computer
Connecting to a Computer with HDMI
The monitor can be connected to and used with video players and computers equipped with an HDMI output. For more information, refer to the user's manual of the player or the other devices.

- Use an HDMI cable with the HDMI logo.
- It may take a moment for the signal to appear after turning on the device outputting the HDMI signal.
- Depending on the video card or driver used, the image may not be shown correctly.
- When you use a computer with HDMI, go to the OSD menu [Video] -> [Advanced Video] and set [Overscan] to [Auto] or [Off].
- If the monitor's main power is turned on after the connected computer has been turned on, the image may not be displayed. In this case, turn off the computer then turn it on again.
- If the source signal is 4K (50 Hz/60 Hz), HDCP 2.2 or HDR, got to the OSD menu [Setup] -> [HDMI Settings] -> [EDID] and set [Mode 2].
- When inputting a 4K signal, use a high-speed or premium high-speed HDMI cable.

Connecting to a Media Device with HDMI
The monitor can be connected using a single HDMI cable to Blu-ray players, streaming media players, or game consoles for the highest picture and audio quality. 4K UHD content is shown when the connected media player also supports 4K content.
Supports HDCP (High-bandwidth Digital Contents Protection) coding, a type of digital rights management that prevents high-definition content, in Blu-ray discs, DVDs and streaming media, from being copied or broadcast illegally.
NOTE:

- Supports 1080p, 1080i, 720p@50 Hz/60 Hz, 480p@60 Hz, 576p@50 Hz, 480i@60 Hz, 576i@50 Hz, 3840×2160 (24 Hz/25 Hz/30 Hz [Mode 1]), 3840×2160 (50 Hz/60 Hz [Mode 2]), 4096×2160 (24 Hz/25 Hz/30 Hz [Mode 1]), 4096×2160 (50 Hz/60 Hz [Mode 2]).
- Connect the HDMI cable when both the media player and the monitor are powered off.
- Use an HDMI cable with the HDMI logo.
- Some HDMI cables and devices may not show the image correctly due to different HDMI specifications.
- With the implementation of HDCP, there may be cases in which certain content is protected by HDCP and might not be displayed. This is not a malfunction.

Connecting to Audio Equipment with ARC Function

When audio equipment with the ARC function is connected to the HDMI1 (ARC) terminal of the monitor using the included ARC- supported HDMI cable, the speakers connected to the audio equipment outputs the monitor's sound.

- The sound output via HDMI1 (ARC) is not adjustable with the OSD menu.
- When the ARC function is activated, the monitor's internal speakers are muted.
- The sound of the video displayed on the screen is output to the audio equipment via the HDMI1 (ARC) terminal. Audio signals not supported by the input terminal used for the video being displayed are not output by the HDMI1 (ARC) terminal. Refer to "Specifications" for the supported signal of each input terminal.

HDMI-CEC (Consumer Electronics Control)
HDMI-CEC provides compatible video devices connected via HDMI with the ability to communicate and allows limited control between the device and the monitor. For example, turning on a Blu-ray player can immediately switch input to the Blu-ray player without using the remote control. Not all devices are fully compatible, and, in some cases, the media device manufacturer may only provide compatibility with its own monitors or TVs. See "HDMI-CEC Command" (page 29).
When supported, the monitor's remote control can be used to control the video device.

Enabling CEC

1. Connect an HDMI-CEC compatible device to the HDMI terminal.
   Press the HDMI button of the remote control.
2. Press the MENU button to open the OSD menu.
3. In the OSD menu, go to [Setup] -> [HDMI Settings] -> and select [On] in [CEC].
4. In the OSD menu, go to [Setup] -> [HDMI Settings] -> [Device list] and press the OK button of the remote control.
   When the device search is complete, connected devices are shown by their names.
5. In the OSD menu, select [Yes] under [Search device].
   When the device search is complete, the HDMI terminals to which a device is connected are shown with the device name.
   If no HDMI-CEC compatible device is found, make sure the device is connected, turned on, that it supports CEC, and that CEC is enabled. Depending on the manufacturer, the CEC feature may have a different name. Refer to the device's user manual.
6. Press the EXIT button of the remote control.

HDMI-CEC Command
Connect an HDMI-CEC compatible device to the HDMI terminal.

OSD menu	HDMI-CEC comm and name	Explanation	Setting

CEC (Consumer Electronics Control)	One Touch Play	When an HDMI-CEC compatible de viceis turned on, the monitor connec ted to the device with an HDMI cabl e also automatically turns on. After the monitor powers on, Input t erminal automatically switches. If the monitor is already turned on w hen the HDMI-CEC compatible devi ce is turned on, it only changes the I nput terminal.	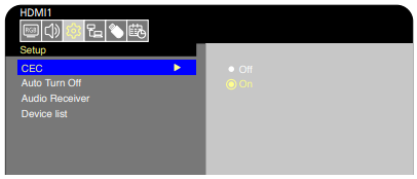 In the OSD menu, go to [Setup] -> [HDMI Settings] -> and select [On] in [CEC].
	Remote Control Pass Through	The monitor's remote control button operation can function with HDMI-C EC compatible devices connected w ith an HDMI cable. For example, part of the HDMI-CEC compatible device menu can be ope rated using the remote control.	
	Power Status	The connected HDMI-CEC compati ble devices can obtain the monitor's power status, such as if the monitor is in standby mode or on.	
	System Information	This function obtains information fro m a connected HDMI-CEC compati ble device (CEC version, physical a ddress, etc.).	
Auto Turn Off	System Standby	If the monitor is set to standby using the remote control, the HDMI-CEC c ompatible device connected with an HDMI cable also goes into standby at the same time. If the monitor goes into standby whil e an HDMI-CEC compatible device i s recording, the device remains on. Refer to the user's manual supplied with the HDMI-CEC compatible devi ce for further information.	In the OSD menu, go to [Setup] -> [HDMI Settings] -> [CEC] and sele ct [Enable] in [Auto Turn Off].
Audio Receiver	System Audio Control	Connect audio equipment with the ARC function to the HDMI1 (ARC) t erminal using the included ARC-sup ported HDMI cable. The Volume but tons of the remote control can contr ol the volume of the connected HD MI ARC audio equipment. While this function is active, the mo nitor's internal speakers are automa tically set to MUTE.	In the OSD menu, go to [Setup] -> [HDMI Settings] -> [CEC] and sele ct [Enable] in [Audio Receiver].
Search device	Device OSD Name Transfer	This function is used to obtain the n ame of the connected devices.	In the OSD menu, go to [Setup] -> [HDMI Settings] -> [CEC] -> [Devic e list]

	Routing Control	By selecting a device name, the HD MI- CEC compatible device input sw itches to the input you selected. Afte r selecting the device, the remote co ntrol operates for the selected devic e.	and press the OK button of the re mote control.

NOTE: Depending on the connected device, sometimes the device does not work properly.

Internal Video Sources

Media Player

The internal Media Player will play audio and video files that are stored on a USB storage device. See page page 40 for instructions on using the Media Player.

Compatible USB Storage Devices

If the USB storage device connected to the monitor is not recognized, check its format. The USB storage device used with the Media Player should be in the FAT32 or FAT16 format. For more information on how to format a storage device, see the manual or the help section of your Windows®.

Use a USB storage device of the correct size in accordance with the drawing below.

If the physical size of the USB storage device is larger than the supported size shown below, use a commercially-available USB extension cable.

Connect the USB storage device to the USB Type-A port of the monitor.

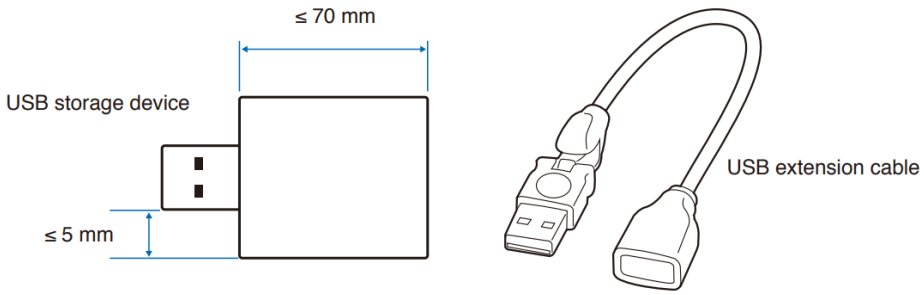

NOTE:

- The monitor is not guaranteed to work with all USB storage devices sold commercially.
- Check that the USB storage device is connected to the USB Type-A port of the monitor.

Connecting a USB Device

Connect a USB storage device to the USB Type-A of the monitor as shown in the figure below to display images and videos using the Media Player function.

⚠ **CAUTION:** Please refer to “CAUTION 2”.

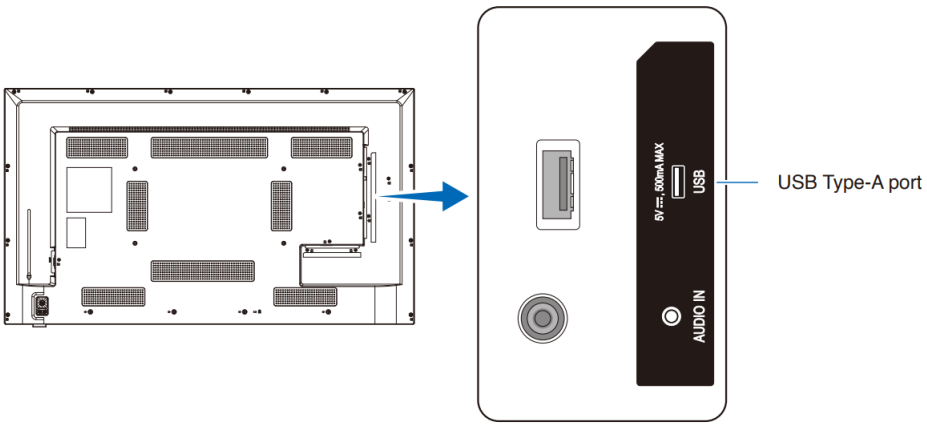

NOTE:

- Check the connector shape and orientation when connecting the USB device or cable.
- Do not connect a USB storage device to the monitor when the monitor is turned on. To prevent damage to the monitor and possible corruption of the connected device's data files, the monitor's main power switch should be off before making connections.

Basic Operation

Power On and Off Modes
Power indicator status
The monitor operates as follows in On mode when no signal is input from an external device.

Mode	**Normal operation (On mode)**	**Auto power save mode (energ y-saving mode)**	**Auto standby mode (energy-saving mode)**
Power indicator	Lit blue	Flashing red	Lit red

Energy Mode
The three following modes are available on the monitor.

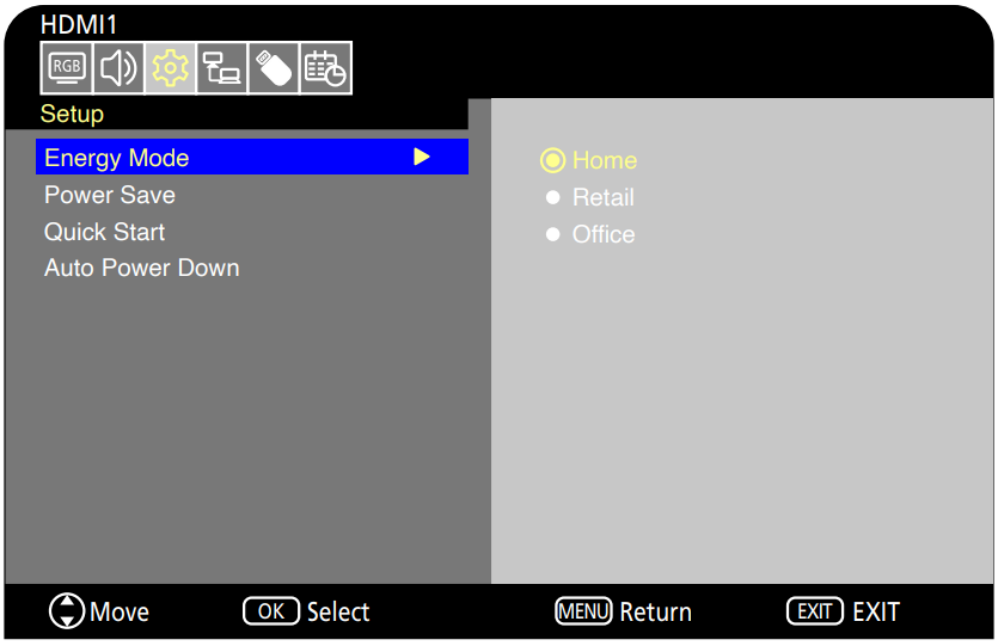

LAN and RS-232C can be selected for the monitor control. The way the energy modes operate varies depending on the selected control method.
When [RS-232C] is selected for control, [Power supply] and [Quick Start] are set to [Off] **Home/Office mode**

- When no signal is input, "No signal" is displayed and the monitor enters the auto standby mode after a while.
- When a signal is input into the selected input terminal, the On mode is resumed.
  When the AV terminal and VGA (YPbPr) terminal are selected, the On mode is not resumed even if a signal is input. In this case, enable the Quick Start function. (With this function enabled, the On mode is resumed.)

Retail mode

- The monitor does not enter the energy-saving mode when no signal is input. (The On mode is maintained.)

⚠ **CAUTION:** During auto standby mode, if the power cord is disconnected and then plugged again, the monitor will be in the auto standby mode.
When [LAN] is selected for control, [Power supply] and [Quick Start] are set to [Off] **Home mode**

- When no signal is input, “No signal” is displayed and the monitor enters the auto power save mode after a while.
- During auto power save mode, the monitor enters the auto standby mode if no LAN signal is received for 3 minutes.
  If a LAN signal is input during auto standby mode, the auto power save mode is not resumed. To maintain the auto power save mode, use the Office mode.
- When a signal is input into the selected input terminal, the On mode is resumed.
  When the AV terminal and VGA (YPbPr) terminal are selected, the On mode is not resumed even if a signal is input. In this case, enable the Quick Start function. (With this function enabled, the On mode is resumed.)

Retail mode

- The monitor does not enter the energy-saving mode when no signal is input. (The On mode is maintained.)

Office mode

- When no signal is input, “No signal” is displayed and the monitor enters the auto power save mode after a while.
  The auto power save mode is maintained regardless of LAN signal input.
- When a signal is input into the selected input terminal, the On mode is resumed.
  When the AV terminal and VGA (YPbPr) terminal are selected, the On mode is not resumed even if a signal is input. In this case, enable the Quick Start function. (With this function enabled, the On mode is resumed.)

⚠ **CAUTION:** During auto power save mode and standby mode, if the power cord is disconnected and then plugged again, the On mode will not be resumed automatically when a signal is detected.

Operating Range for the Remote Control
Point the top of the remote control toward the monitor’s remote control sensor during button operation.
Use the remote control within a distance of about 7 m (23 ft.) from the remote control sensor, or within a horizontal and vertical angle of 30° and within a distance of about 3.5 m (10 ft.).
NOTE: The remote control system may not function when direct sunlight or strong illumination strikes the remote control sensor, or near fluorescent lamps.

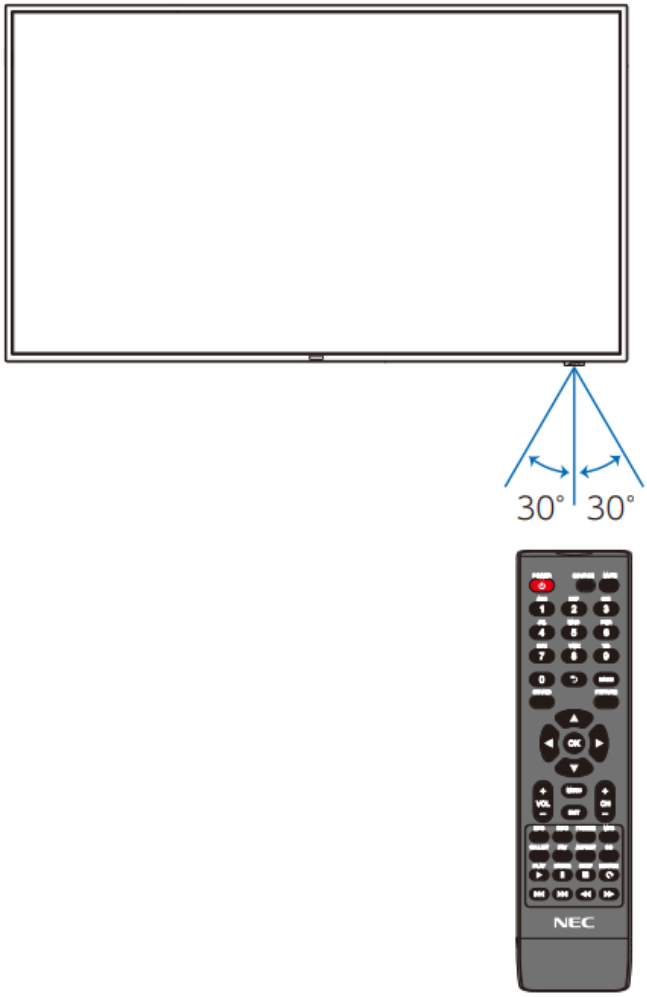

Handling the remote control

- Do not expose to strong shock.
- Do not allow water or other liquid to splash on the remote control. If the remote control gets wet, wipe it dry immediately.
- Avoid exposure to heat and steam.
- Ask your supplier or your municipality for information on how to dispose of the batteries.
- Do not open the remote control, except to install the batteries.

Showing the Information OSD

The Information OSD provides information such as the selected video input terminal, resolution, and IP address. Press the INFO button of the remote control to bring up the information OSD.

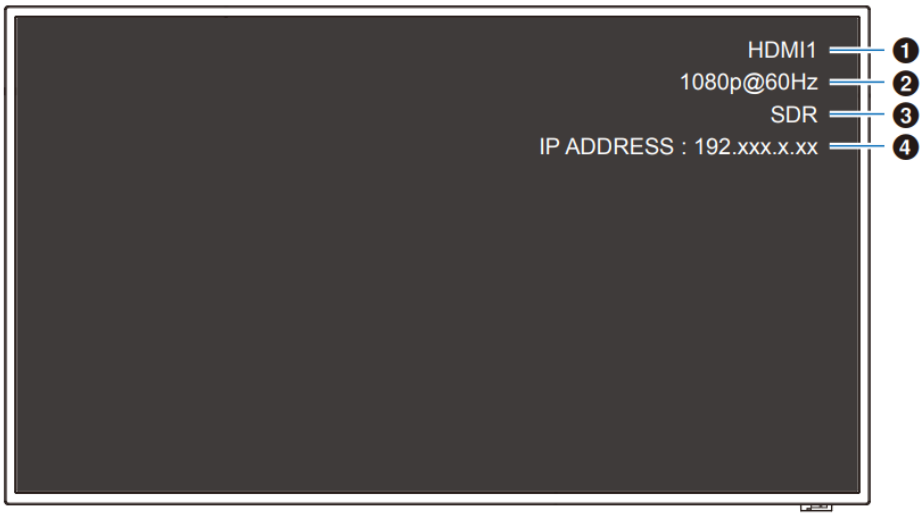

1. Input name
2. Resolution
3. SDR / HDR information
4. IP address*

* When [Information OSD] is set to [On]:
White: Connected to a LAN
Red: Not connected to a LAN
NOTE: When the input signal is [Media Player], the information OSD will not be displayed.

Switching Between Sound Modes
Press the SOUND button of the remote control to change the Sound Mode setting between Standard, Music, Movie, and Custom.
Switching Between Picture Modes
Press the PICTURE button of the remote control to change the Picture Mode setting between Dynamic, Standard, Energy Savings, Conferencing, HighBright, Custom, and HDR Video*.
* HDR Video can be selected only when an HDR signal is input.

Setting the Aspect Ratio
Press the ASPECT button of the remote control to change the Aspect Ratio setting between Normal, 1:1, Full, and Zoom.
NOTE: This setting cannot be changed when [Media Player] is selected for the input signal.

	Normal	**1:01**	**Full**	**Zoom**
Video signal	The aspect ratio of t he input signal is maintained and the i mage is enlarged/ r educed. • Black bars are add ed vertically or horizontally. • The screen is not c ut, neither vertically nor horizontally.	The image is displa yed with the number of panel pixels corre sponding to the resolution of t he input signal. When the input sign al is larger than the number of the panel pixels, the aspect ra tio is maintained an d the image is reduc ed.	The aspect ratio of t he input signal is ign ored and the image i s enlarged. • There are no black bars, neither vertical ly nor horizontally. • The screen is not c ut, neither vertically nor horizontally.	The aspect ratio of t he input signal is maintained and the i mage is enlarged. • There are no black bars, neither vertical ly nor horizontally. • Part of the image, vertically or horizontally, is not di splayed.
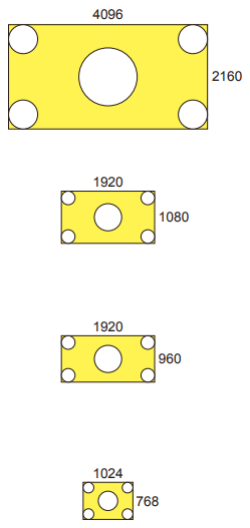	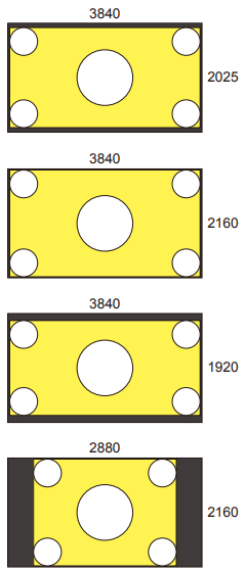	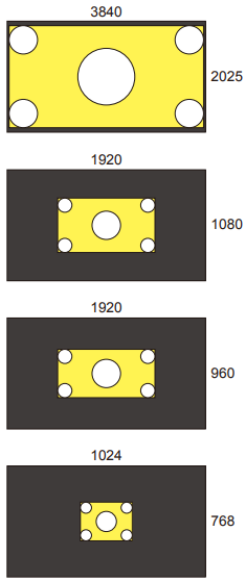	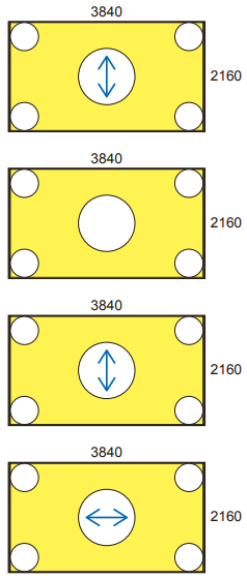	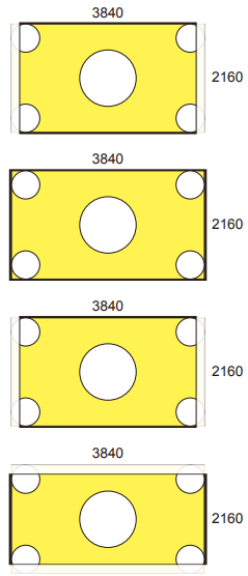

NOTE: Note that changing the aspect ratio to compress or stretch an image and display it publicly or for commercial purposes in coffee shops, hotels, or other such places, may violate the rights of the copyright holder.

OSD (On-Screen Display) Controls

The monitor features an OSD (On-Screen Display) function that allows the user to easily adjust the screen.
By operating the menu displayed at the top of the screen, you will be able to adjust the brightness and the other screen settings.
OSD screen structure The OSD screen is composed of the following elements.

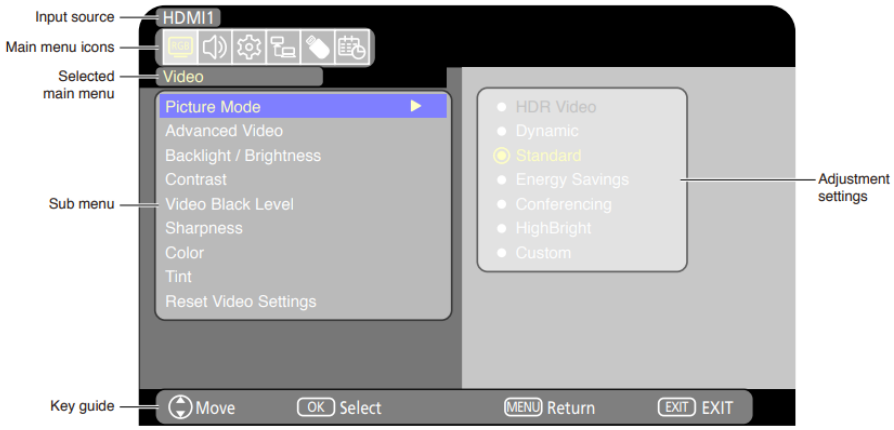

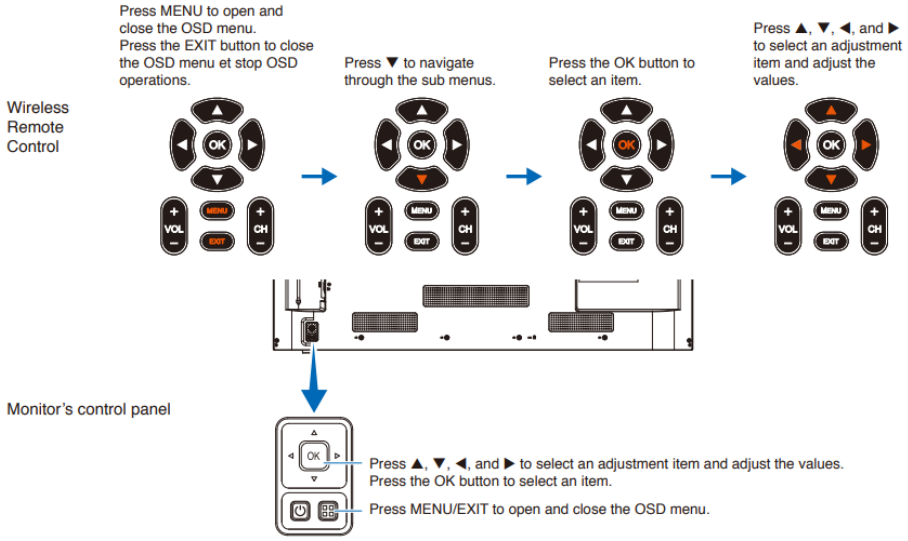

The function of each OSD menu element is briefly explained below. For more details on the content of the menu, see “OSD Controls List” (page 72).

	Video settings: Select one of the default picture modes, manually adjust the color settings, a djust the aspect ratio, and adjust the other settings related to the image.
	Audio settings: Adjust the volume, balance, equalizer, and the other settings related to the audio.
	Setup settings: Display the monitor information, select the language, or return the settings to their default values.
	Control settings: Configure settings such as the network information.
	Media Player settings: Configure the USB Demo Mode and other settings.
	Schedule settings: Create auto power on/off schedules for the monitor and set the sleep time r.

Using the Media Player Menu

The Media Player plays image, video, and music files located on a USB storage device connected to the USB Type-A port of the monitor (page 22).

To open the Media Player menu, press the SOURCE button of the remote control and select [Media Player].

NOTE: Connect the USB storage device where the files are stored to the USB Type-A port of the monitor.

Media Player Menu

This function can be used to display photos (still images) and play video and music files stored in the USB storage device.

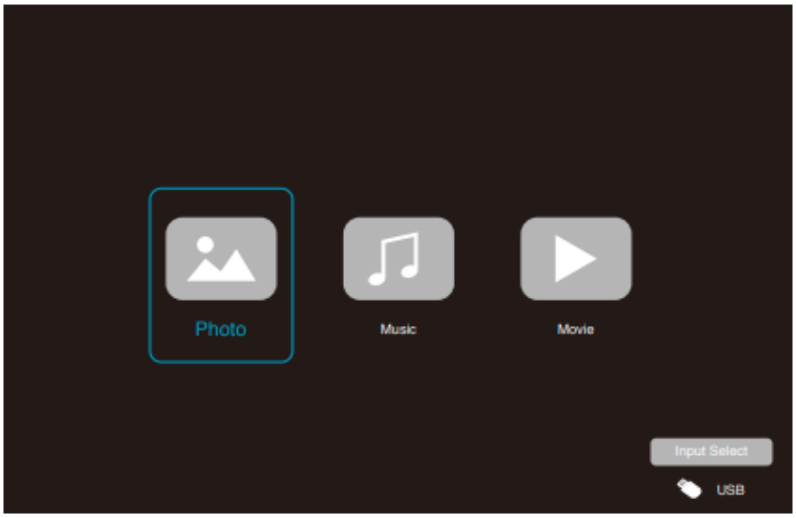

Select the type of the file you want to play between [Photo], [Music], and [Movie].

Selecting Files to Play

- Playing a file

  Select a file using the ▲,▼,◀, and ▶ buttons of the remote control, and then press the ▶ button.

  Press the button to pause the playback.
- Playing multiple files

  1. Select files using the ▲,▼,◀, and ▶ buttons of the remote control.
  2. Press the OK button of the remote control to add a checkmark next to each file.
  3. This saves the files as a playlist in the USB storage device.

NOTE:

- The selected files play in the order they are displayed in the folder.
- File names must contain only alphanumeric characters.

Operation buttons

- Press the OK button of the remote control while playing a file to display the OSD operation menu on the screen.
- Press the ◀, ▶ buttons to highlight an item in the operation menu and then press the OK button to select it.
- Press the ▼ button of the remote control to close the operation menu.

Slideshow Operation

- Select files using the ▲, ▼, ◀, ▶, buttons and press the ▶ button to start a slideshow.

  Press the ❙❙ button to pause the slideshow.
- To pause the slideshow using the OSD menu, select ❙❙.

  Select ▶ to resume the slideshow.
- Select ▶ or press the ❙◀◀ button of the remote control to return to the previous image.

- Select Next or press the ▶▶| button of the remote control to go to the next image.
- Select Stop or press the ■ button of the remote control to stop the slideshow.

Repeat play

Repeat setting can be configured for file playback. The following modes can be selected.

Repeat – Repeat off

- No selected files.
  – All files in the folder are played once, in the sorted order.
- One or more selected files.
  – Any files you checked are played once, in the sorted order.

Repeat – Repeat one file

- – A file is playing: the current file plays on a loop. – No file is playing: the highlighted file in the folder plays on a loop.
- One or more selected files.
  The first checked file in the sorted order plays on a loop.

Repeat – Repeat all files

- No selected files.
  – All files in the folder are played on a loop, in the sorted order.
- One or more selected files.
  – The selected files are played on a loop, in the sorted order.

Other functions

- Select Playlist to view the playlist of files.
  You can also select the files to play from the list.
- While a file is being played, select INFO to show information on the file being displayed.

Video and Music Operations

- Select files using the ▲, ▼, ◀, ▶, buttons of the remote control and press the ▶ button to start playback.
  Press the ❚❚ button to pause the playback.
- To pause the playback using the OSD menu, select Pause.
  Select Play to resume the playback.
- Select FF to start fast forward.
  FF2X, FF4X, FF8X, FF16X, FF32X
  (The sound is not output.)
  (FF32X can be selected only when a video file is played.)

- Select FB to start fast backward.
  FB2X, FB4X, FB8X, FB16X, FB32X
  (The sound is not output.)
  (FB32X can be selected only when a video file is played.)
- Select Prev or press the ⏮ button of the remote control to return to the previous file.
- Select Next or press the ⏭ button of the remote control to return to go to the next file.
- Select Stop or press the ■ button of the remote control to stop the playback.

Repeat play
Repeat setting can be configured for file playback. The following modes can be selected.

Repeat – Repeat off

- No selected files.
  – All files in the folder are played once, in the sorted order.
- One or more selected files.
  – Any files you checked are played once, in the sorted order.

Repeat – Repeat one file

- – A file is playing: the current file plays on a loop. – No file is playing: the highlighted file in the folder plays on a loop.
- One or more selected files.
  The first checked file in the sorted order plays on a loop.

Repeat – Repeat all files

- No selected files.
  – All files in the folder are played on a loop, in the sorted order.
- One or more selected files.
  – The selected files are played on a loop, in the sorted order.

Other functions

- Select Playlist to view the playlist of files.
  You can also select the files to play from the list.
- While a file is being played, select INFO to show information on the file being played.

NOTE

- Only use USB mass storage class devices.
- We cannot guarantee to support all commercially-available USB mass storage devices.
- Do not use a USB hub.

- Do not use a multi-partition USB storage device.
- The USB Type-A port of the monitor supports 5 V / 500 mA. When using a USB device of more than 500 mA, we recommend using the AC adapter supplied with the USB device.
- When connecting a USB device formatted as FAT16 or FAT32 to a computer, a message prompting you to scan and fix the USB device may appear. If that occurs, execute “Scan and fix”.

Data Format for USB

Supported file system	FAT16 (max 2 GB), FAT32 (max 4 GB)		
Max folder level	9		
Max number of photos	997		
Photo mode			
File extension	**Data format**	**Min resolution (H x V) of image**	**Max resolution (H x V) of image**
JPEG, JPG, JPE	Baseline JPEG	75 x 75 pixels	15,360 x 8,640 pixels
Music mode			
File extension	**Data format**	**Max bit rate**	**Max channel No.**
MP3	MPEG1/2 Layer3 (MP3)	320 kbps	2 ch
Movie mode			
Container format	**Supported video codec**		**Supported audio codec**
MPG, MPEG	MPEG1, MPEG2, MPEG4		LPCM, MP3, AAC
TS	MPEG2, H.264, HEVC/H.265		LPCM, MP3, AAC
MP4	MPEG2, MPEG4, H.263, H.264, HEVC/H.265		LPCM, MP3, AAC
WMV	H.264, Windows Media Video 9		WMA 9, WMA 10 Pro
Video codec	**Max bit rate of video*2**	**Max resolution (H x V) of video**	
MPEG1	40 Mbps	1920 x 1080 @30 Hz	
MPEG2	40 Mbps	1920 x 1080 @30 Hz	
MPEG4	40 Mbps	1920 x 1080 @30 Hz	
H.263	40 Mbps	1920 x 1080 @30 Hz	
H.264	135 Mbps	3840 x 2160 @60 Hz	
HEVC/H.265	100 Mbps	3840 x 2160 @60 Hz	
Windows Media Video 9 (WMV3)	40 Mbps	1920 x 1080 @30 Hz	
Audio codec	**Max bit rate of audio*2**	**Max channel No.**	
LPCM	1.5 Mbps	5.1 ch*1	

MPEG1/2 Layer3 (MP3)	320 kbps	2 ch
AAC	AAC-LC: 576 kbps HE-AAC v1: 288 kbps HE-AAC v2: 144 kbps	5.1 ch*1
WMA 9 Standard	320 kbps	2 ch
WMA 10 Pro M0	192 kbps	2 ch
WMA 10 Pro M1	384 kbps	5.1 ch*1
WMA 10 Pro M2	768 kbps	5.1 ch*1

*1: It is played with down-converted to 2 ch.
*2: It may not play smoothly with a combination of max bit rate of video and audio.
NOTE: Sometimes, it may not be possible to play a video file even when the conditions above are met.
The file may not be played properly depending on the bit rate.
Video files made with a codec not supported by the monitor cannot be played.

Advanced Operation

Creating a Power Schedule

The schedule function allows the monitor to automatically switch between power on and standby mode at different times.

To program the schedule:

1. Enter the [SCHEDULE] menu in the OSD menu.
   a. Use the ▲/▼ buttons of the remote control to select [Current Time settings].
   b. Press the OK button of the remote control. Press the ◀, ▶ buttons of the remote control to move between the hours and minutes fields.
   c. Use the ▲/▼ buttons of the remote control to set the time.
2. After setting the time, press the MENU button of the remote control.

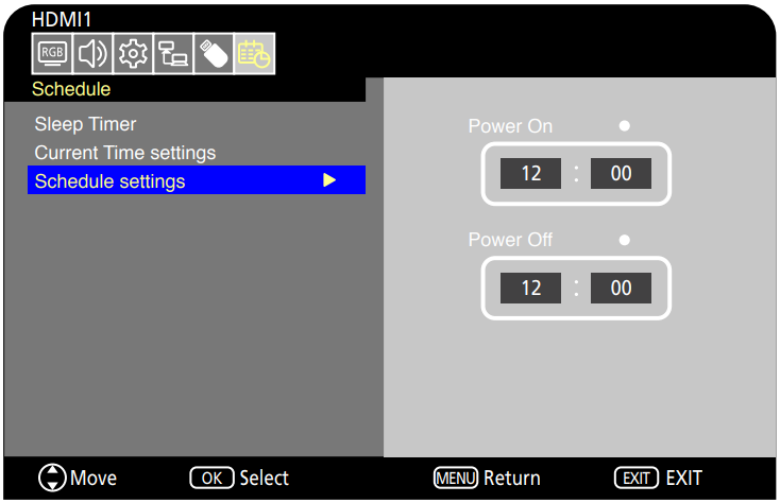

3. Use the ▲/▼ buttons of the remote control to select [Schedule settings].
   a. Press the OK button of the remote control. Place the cursor on [Power On] and press the OK button of the remote control to enable the [Power On]. Press the ◀, ▶ buttons of the remote control to move between the hours and minutes fields.
   Use the ▲/▼ buttons of the remote control to set the time.

Power On disabled

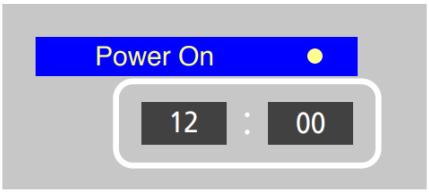

Power On enabled

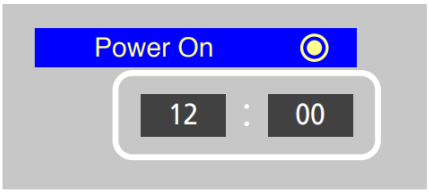

b. Use the ◀, ▶ buttons of the remote control to place the cursor on [Power Off] and then press the OK button of the remote control to enable [Power Off]. Press the ◀, ▶ buttons of the remote control to move between the hours and minutes fields.

Use the ▲/▼ buttons of the remote control to set the time.

Power Off disabled

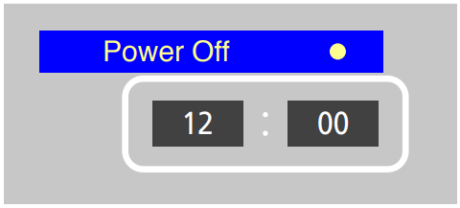

Power Off enabled

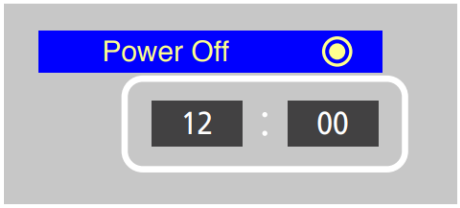

4. After setting the schedule, press the MENU button of the remote control to return to the previous menu or press the EXIT button to close the OSD menu.

Using Picture Modes

There are different picture modes available. They have been configured for different applications as described in the “Picture Mode Types” table below.

To change picture modes:

In the OSD menu, go the [Video] -> [Picture Mode], or press the PICTURE button of the remote control to select a mode.

HDR Video -> Dynamic -> Standard -> Energy Savings -> Conferencing -> HighBright -> Custom

Picture Mode Types

Picture Mode	**Purpose**
HDR Video	Setting for HDR format video (can be selected only when an HDR signal is input)
Dynamic	High-contrast video setting
Standard	Standard video setting
Energy Savings	Video setting complying with the International Energy Star standard.
Conferencing	Video setting suited for video conferences
HighBright	Video setting suited for brighter environments
Custom	Customizable settings

Setting Security and Locking the Monitor Controls

Under normal operation, the monitor can be controlled by any person using the remote control or the monitor control panel. You can prevent unauthorized use and changes to the monitor settings by enabling the security and lock settings.

The security and locking functions covered in this section are:

- Locking the monitor control panel buttons
- Locking the remote control buttons

Locking the Button Controls
The lock settings prevent the monitor from responding to button presses on the remote control or monitor control panel. When locking the button controls, some buttons can be configured to remain unlocked. Locking and unlocking the button controls do not require a password.
Locking the Control Panel Buttons
The [Key Lock Settings] prevent the monitor from being controlled using the buttons on the monitor control panel.

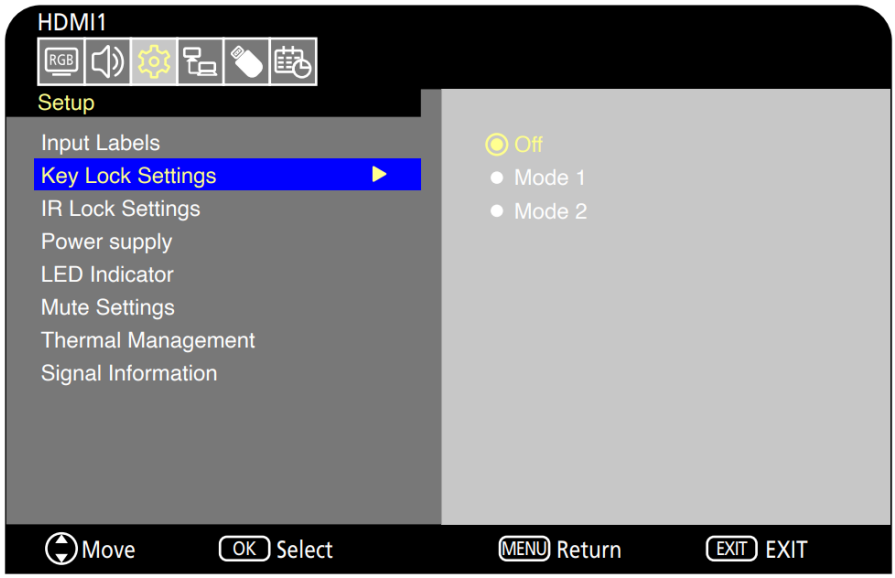

1. In the OSD menu, go to [Setup] -> [Other settings] and select [Key Lock Settings].
2. Select the key lock range.
   • Off: All buttons operate normally.
   • Mode1: Only the power button and the input switching function operate.
   • Mode2: All buttons are locked. (Only the power button can be used during standby mode.)
   NOTE: The buttons are locked 3 seconds after Mode1 or Mode2 has been selected.

Unlocking the Monitor Panel Button Controls
Carry out the following with the monitor in On mode.

- OSD menu: To remove the lock and restore normal button operation, set the [Key Lock Settings] to [Off] using the remote control.
- Monitor buttons: To remove the lock and restore normal button operation, hold the MENU button pressed for 5 seconds or more.

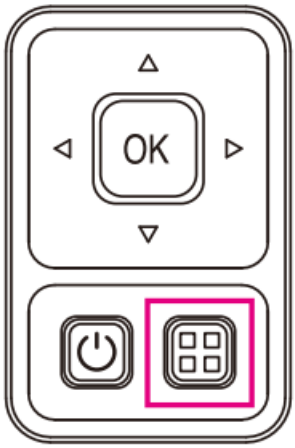

Locking the Remote Control Buttons
The [IR Lock Settings] prevent the monitor from being controlled using the remote control.

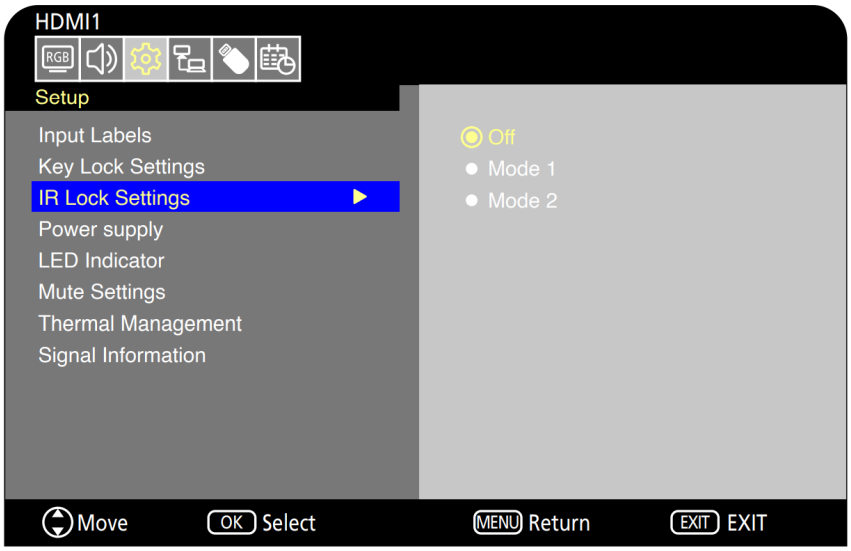

1. In the OSD menu, go to [Setup] -> [Other settings] and select [IR Lock Settings].
2. Select the key lock range.
   - Off: All buttons operate normally.
   - Mode1: Only the POWER and the SOURCE buttons operate.
   - Mode2: All buttons are locked. (Only the power button can be used during standby mode.)

   NOTE: The buttons are locked 3 seconds after Mode1 or Mode2 has been selected.

Unlocking the Remote Controls
Carry out the following with the monitor in On mode.

- OSD menu: To remove the lock and restore normal button operation, set the [IR Lock Settings] to [Off] using the monitor buttons.
- Remote control: To remove the lock and restore normal button operation, hold the EXIT button pressed for 5 seconds or more.

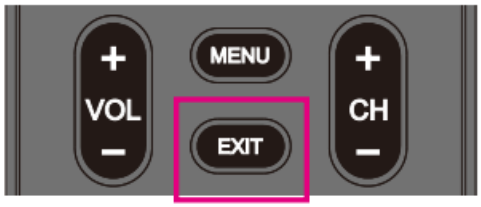

External Control

Connecting an external device

There are two options to connect an external device to control the monitor.

- RS-232C Interface
  Connecting an external device to the RS-232C terminal of the monitor.
- Network (LAN) Interface
  Connecting a network to the LAN port of the monitor with a LAN cable.

Controlling the Monitor via RS-232C

This monitor can be controlled by connecting a personal computer with an RS-232C terminal to the RS-232C terminal of the monitor with a commercially-available RS-232C crossover cable. The following operations are possible.

- Turning the monitor on or putting it into standby.
- Switching between input signals.
- Switching between mute On and Off.
  NOTE: Set [Control Interface] under [Control Settings] to [RS-232C] (page 78).

Connection

Monitor + computer.

- Turn off the monitor and the computer before connecting a computer to the monitor.
- First, turn the computer on, and then turn the monitor on. (Otherwise the COM port may not operate properly.)
- To control the monitor via commands sent from a computer connected with an RS-232C cable, use the control commands.
  Instructions for the control commands can be found in “Commands” in “External Control” in this manual or in “External_ Control.pdf” (see “Appendix B External Resources” page 71).

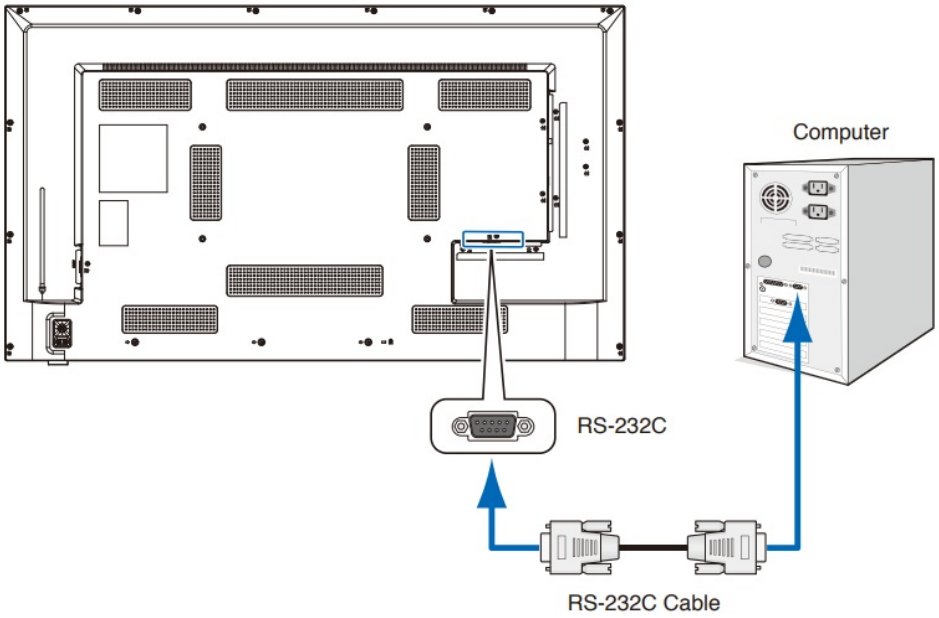

NOTE:

- If your computer is equipped only with a 25-pin serial port connector, a 25-pin serial port adapter is required.
- Contact your supplier for details.
- For the pin assignment, see “Pin Assignment RS-232C input/output”.

This monitor uses RXD, TXD and GND lines for RS-232C control.
A commercially-available crossover cable (not included) should be used for RS-232C control.

Pin Assignment
RS-232C input / output

Pin No.	Name
1	NC
2	RXD
3	TXD
4	NC
5	GND
6	NC
7	NC
8	NC
9	NC

D-sub 9-pin (monitor side)

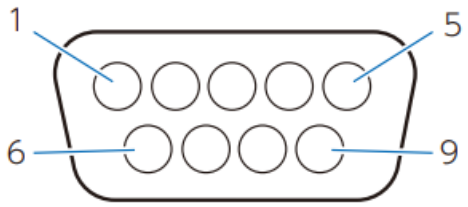

This monitor uses RXD, TXD and GND lines for RS-232C control.

Controlling the Monitor via LAN

The monitor is equipped with a LAN port (RJ-45). Connecting the monitor to a network allows you to receive email notifications from the monitor and control the monitor from a computer via a network. To use a LAN connection, you are required to assign an IP address to the monitor (page 78).

The monitor will obtain an IP address automatically when connected to a DHCP network.

NOTE: Set [Control Interface] under [Control Settings] to [LAN] (page 78).

Example of LAN connection

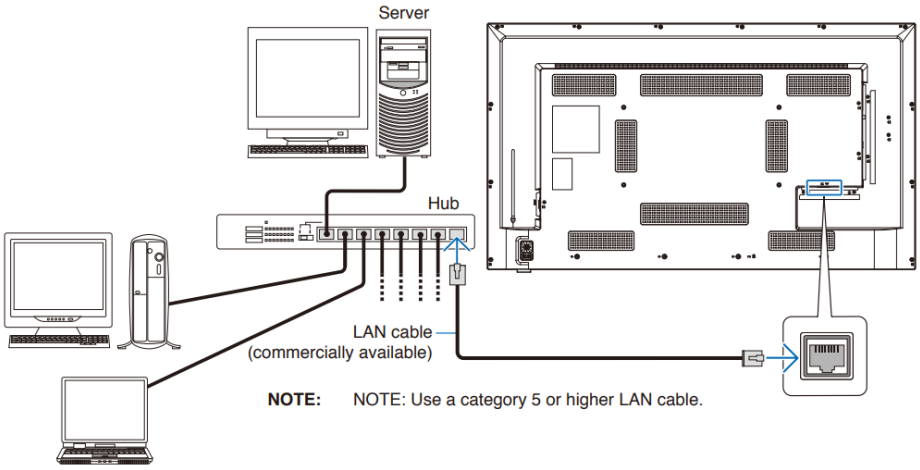

HTTP Browser

Overview

Connect the monitor with a commercially-available LAN cable to configure the LAN settings using the HTTP server function.

This monitor uses “JavaScript” and “Cookies” and the browser should be set to accept these functions. Refer to the help files for the Web browser to change the settings to use JavaScript and Cookies.

To access the HTTP server, launch a web browser on a computer connected to the same network as the monitor and enter the following URL in the Web address field.

Network Settings

http://<Address.IP.of.the.monitor>

NOTE:

- The control software can be downloaded from the NEC Display website.
- By default, the IP address of the monitor is set automatically. After a reset, the IP address is obtained automatically.
- Depending on the network environment, the display speed and response to commands or clicks on buttons may be slow, or the operations may not be recognized. In such a case, consult your network administrator. The monitor may not respond if the buttons shown on the browser are repeatedly pressed in rapid intervals. In such a case, wait a moment and try again. If you still can’t get a response, turn the monitor off and then back on.
- If the monitor Network Settings screen does not appear in the Web browser, press the Ctrl+F5 keys to refresh your Web browser.
- To control the monitor via a LAN, see “External_Control.pdf” in our Website (see “Appendix B External Resources” page 71). If the screen does not appear, clear the cache of the Web browser.

Preparation Before Use

Connect the monitor to the network using a commercially-available LAN cable before attempting to use browser operations. Operation with a browser that uses a proxy server may not be possible depending on the type of proxy server and the setting method. Although the type of the proxy server will be a factor, it is possible that items that have been set will not be shown depending on the effectiveness of the cache, and the settings configured from the browser may not be reflected in operation. It is recommended that a proxy server is not used unless the network environment requires it.

Screen Adjustment Using a Browser

Access the following address to show HOME. Click the links on the left-hand column on the HOME screen to access the setting screens.

http://<Address.IP.of.the.monitor>

The default login password is “admin”.

OSD Menu Settings in the Monitor Web Controls

The functions related to the network can be configured the same way as in the OSD menu using the links below.

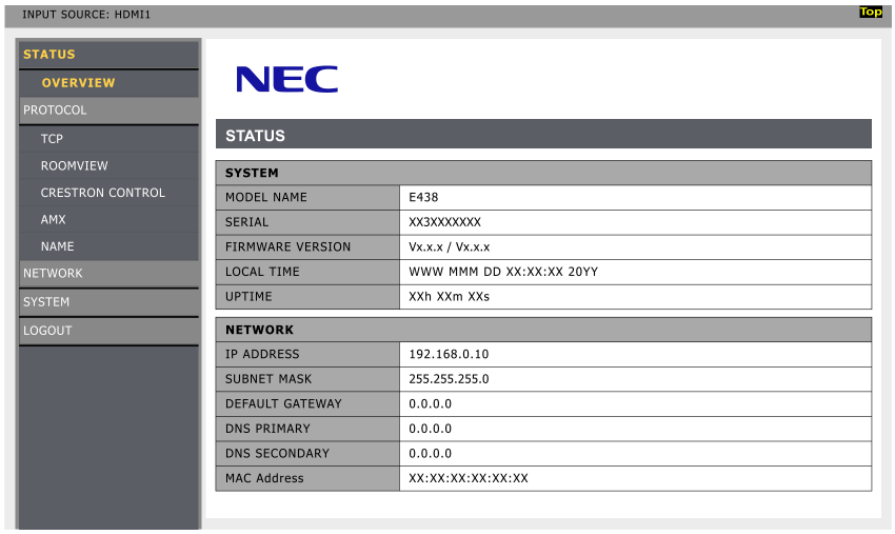

NOTE: The Crestron functions are only available on monitors that have a serial number with a third-digit of “3” or higher (xx3xxxxxxx).

You can check the monitor’s serial number at [Setup]->[Monitor Information]->[SN:].

Network Settings

Click on “NETWORK” on the left-hand column on the HOME screen to enter the setting screen.

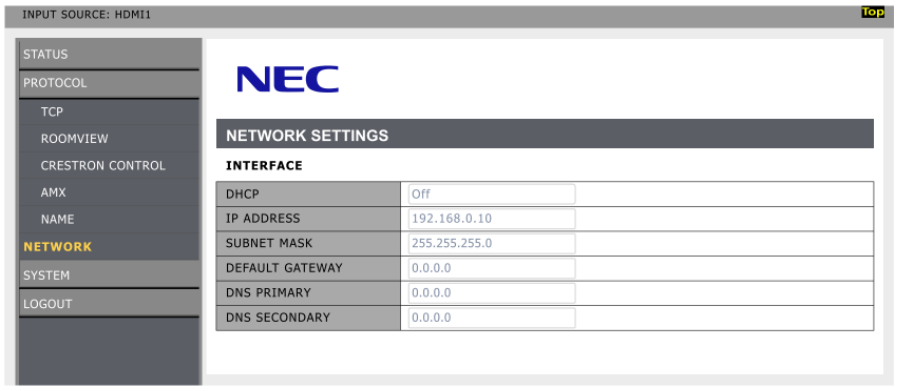

DHCP	Select a method for setting the IP ADDRESS. Off: Sets fixed network settings. On: Obtains the network settings from the DHCP server on the network. Manual DNS: Obtains the network settings from the DHCP server on the network but the DNS is set manually. **NOTE:** Consult your network administrator if you have any trouble with the connection.
IP ADDRESS	Set the IP address for the monitor connected to the network when [Off] is selected for [DHCP].
SUBNET MASK	Set the subnet mask for the network to which the monitor is connected when [Off] is selected for [DHCP].
DEFAULT GATEWAY	Set the default gateway for the network to which the monitor is connected when [Off] is selected for [DHCP]. Enter [0.0.0.0] to delete the setting.
DNS PRIMARY	Enter the IP address of the primary DNS server of the network connected to the monitor. **NOTE:** Enter [0.0.0.0] to delete the setting.
DNS SECONDARY	Enter the IP address of the secondary DNS server of the network connected to the monitor. **NOTE:** Enter [0.0.0.0] to delete the setting.

ROOMVIEW Settings
Click on “ROOMVIEW” on the left column below HOME.
The monitor supports Crestron’s ROOMVIEW, allowing multiple devices connected in the network to be managed and controlled from a computer or a controller.

ROOMVIEW	Enables or Disables managing from the computer.
PORT	Sets the Crestron port used for Ethernet communication.

For further information, visit **http://www.crestron.com**

CRESTRON CONTROL Settings
Click on “CRESTRON CONTROL” on the left column below HOME.

CRESTRON CONTROL	Enables or Disables managing from the controller.
CONTROLLER IP ADDRESS	Sets the IP address of the CRESTRON SERVER.
IP ID	Sets your CRESTRON SERVER IP ID.
PORT	Sets the Crestron port used for Ethernet communication.

HINT: The CRESTRON CONTROL settings are required only for use with Crestron’s ROOMVIEW.
For further information, visit **http://www.crestron.com**
AMX Settings
Click on “AMX” on the left-hand column on the HOME screen to enter the setting screen.

AMX BEACON	When the monitor is connected to a network supporting the NetLinx control system by AMX, enables or disables the function to send a beacon to the system from AMX Device Discovery.

NOTE: When using a device that supports AMX Device Discovery, all AMX NetLinx control systems will recognize the device and download the appropriate Device Discovery Module from an AMX server.

Commands

Connecting the monitor to a computer via RS-232C or to a network via LAN allows for the transmission of commands to the monitor, providing remote control of the monitor from a connected device. Instructions for each command format can be found in “External_Control.pdf” in our Website (see “Appendix B External Resources” page 71).

RS-232C Interface

Item	Details
PROTOCOL	RS-232C
BAUD RATE	9600 [bps]
DATA LENGTH	8 [bits]
PARITY	NONE
STOP BIT	1 [bit]
FLOW CONTROL	NONE

Network (LAN) Interface

Item	Details
PROTOCOL	TCP
PORT NUMBER	7142
COMMUNICATION SPEED	AUTO setting (10/100Mbps)

Troubleshooting

When a problem occurs with the monitor…

In such a case, refer to the following.

Nothing is displayed…

Symptom	Condition	Cause and solution	Reference
Nothing is displayed on the screen.	The power indicator is off In the OSD menu, [Setup] -> [Other Settings] -> [LED Indicator] is set to [On]	Check that the power cord is properly connected.	P.11
		Use another device to check that power is correctly supplied to the outlet.	
	The power indicator is lit blue	A terminal to which no signal is input may be selected. Press the input switch button to select a different input terminal.	P.21
		Display the OSD menu and check the following settings.	P.38
		● If the OSD menu does not appear, the monitor may malfunction. Contact your supplier.	
		● If the OSD menu is displayed properly, the monitor is not malfunctioning. Adjust [Backlight / Brightness] and [Contrast] in the [Video] settings.	P.74
		● If the image is not displayed after adjusting [Backlight / Brightness] and [Contrast] in the OSD menu, check that the connected device operates correctly. If the monitor is connected to a computer, check the frequency, resolution, and type of output signal on the computer.	P.26
	The power indicator is lit a color other than blue or is flashing.	The power management function may be functioning. Press any button on the keyboard, move the mouse, or press the POWER button on the power cable or the remote control.	P.23, P.33
		Check that the signal cable is correctly connected to the input and output terminals of the monitor and the connected device.	P.25
		Check that the power adaptor is properly connected.	P.26
		Check that the connected computer or video device is turned on.	
The image on the screen disappeared.	The screen, on which the image was correctly displayed, turned black, started to blink, or did not display anything.*	The LCD panel needs to be replaced. Contact your supplier.	

* The lifespan of the backlight used in the monitor may end.
The image is not displayed correctly…

Symptom	Cause and solution	Reference

Black dots (dots not lit) or bright dots (dots always lit) appear on the screen.	This is due to the characteristics of LCD panels and is not a malfunction.	
The brightness of the image is not even.	This may happen depending on the content displayed. This is due to the characteristics of LCD panels and is not a malfunction.	
The shadow of thin vertical lines appears on the screen.	This may happen depending on the content displayed. This is due to the characteristics of LCD panels and is not a malfunction.	
Moiré appears when detailed patterns are displayed.	This may happen when detailed patterns are displayed. This is due to the characteristics of LCD panels and is not a malfunction.	
The colors do not look correct depending on the viewing angle.	The tint may greatly vary depending on the viewing angle (the angle from which the screen is viewed).	P.65- 68
The display condition of the screen is changing gradually.	The display condition changes gradually while the monitor is being used. The ambient temperature may also have an impact on the display condition. This is due to the characteristics of LCD panels and is not a malfunction.	P.23
After changing the screen, the image of the previous screen remains slightly.	When the same still image is displayed for a long time, this phenomenon of persisting image may occur. You may press the POWER button of the remote control or the ⏻ of the monitor to put the monitor on standby, or display changing images for about one day until the persisting image disappears naturally. If the still image is displayed for a really long time, the persisting image may not disappear. This is not a malfunction. It is recommended to turn the monitor off when not using it.	
The colors are not displayed correctly.	Display the OSD menu and check the following settings.	P.38
	● If the OSD menu is not displayed properly, the monitor may malfunction. Contact your supplier.	
	● If the OSD menu is displayed properly, the monitor is not malfunctioning. Select [Color] and adjust the colors as needed, or execute [Reset Video Settings] under the [Video] settings to return the settings to their default values.	P.74, P.74
	● If the OSD menu is displayed properly and the computer screen does not appear correctly after executing [Reset Video Settings] under [Video], check the connection to the computer as well as the frequency, resolution and output signal type setting on the computer.	P.25, P.63

The image is not displaye d correctly (problems not mentioned above) or the video is interrupted mom entarily.	The image quality may decrease or the video may be interrupted if a transponder, a splitter, or a long cable is used. Replace the cable yo u are using with a shielded cable, or connect directly to the monitor without using a transponder or a splitter. If a twisted pair cable extender is used, m ake sure it supports shielded cables. Noise may also appear on the screen or the video may be interrupted depending on the usage envi ronment and the cable used. In such a case, see the “Precautions regarding display installation and connection” in the NEC Display Solutions Website.	
	Display the OSD menu and check the following settings.	P.38
	● If the OSD menu is not displayed properly, the monitor may malfun ction. Contact your supplier.	
	● If the video is interrupted when an HDMI signal with the 3840 x 21 60 or 4096 x 2160 resolution is input, use an HDMI cable supporting 4K.	
The power turns off auto matically.	Check the setting in [Setup] -> [Power save settings] -> [Auto Power Down]. Set the [CEC] setting under [Setup] -> [HDMI Settings] to [Off]. Check the setting in [Schedule] -> [Sleep Timer].	P.76, P.80
The monitor does not ope rate according to the sch edule function.	Check the setting in [Schedule] -> [Current Time settings]. Enable [Power On] under [Schedule] -> [Schedule settings]. Enable [Power Off] under [Schedule] -> [Schedule settings].	P.80
The display is disturbed.	The display may be disturbed when power is turned on or when the settings have been changed. This is not a malfunction.	

An instruction or caution screen is displayed…

Symptom	Cause	Solution	Reference
A caution message is displayed on the screen.*1 **Attention !** No Sgnal Please check input signal or Connection.	The signal cable may not be connected properly to the input or output terminals of the monitor or the computer.	Connect properly the signal cable to the input and output terminals of the monitor and the computer.	P.25
	The HDMI input may have switched.	Set the [CEC] setting under [Setup] -> [HDMI Settings] to [Off].	P.76
	The signal cable may be damaged.	Check that the signal cable is not damaged.	
	The computer may be turned off.	Check that the computer is turned on.	
	The power management function of the computer may be functioning.	Move the mouse or press a key on the keyboard.	
Out of Range	An improper signal may be input to the monitor.	Change the frequency of the input signal or the resolution of the computer.	P.63
	A signal with a resolution higher than the resolution supported by the monitor may be input.	Change the frequency of the input signal or the resolution of the computer.	P.63
A temperature warning is displayed on the screen. **Warning!!** The internal temperature is high. Please check the ambient temperature.	The ambient temperature exceeds the operation guaranteed temperature.	Turn off the power of the monitor since this problem may cause a malfunction.	P.77

*1 Depending on the computer, a proper signal may not be output immediately after changing the resolution or the frequency and the caution may be displayed for a while. In such a case, wait for a while. If the screen display returns to normal, it means the input signal is proper.

Others (when connected to a computer)

Symptom	Cause	Solution
I cannot change the resolution or the number of colors/The resolution or the number of colors is fixed.	Sometimes, the signal cannot be input and output.	Restart the monitor and the computer.
	The driver of the video card may not be correctly recognized by the OS.	Reinstall the video card driver. For more information on the reinstallation procedure, refer to the computer manual or the support service for the computer.

Others (remote control, speakers)

Symptom	Cause and solution	Reference
The remote control is not functioning.	● The batteries may be flat. ● Check that the batteries are inserted correctly (check the + and – sides). ● The [IR Lock Settings] may be set to [Mode 1] or [Mode 2].	P.10, P.77
The video is displayed but there is no sound.	● Check that the audio cable is correctly connected. Check also that the audio balance is not fully set to one side only. If the balance is set to one side only, set it to the center. ● The sound may be muted. Press the MUTE button on the remote control or the main unit and check that the sound is output. ● The volume may be set to the minimum. Adjust the volume using the + and – buttons on the main unit or the VOL + and – buttons on the remote control.	P.22, P.23, P.75

Others (when connected via RS-232C or LAN)

Symptom	Cause and solution	Reference
Control via RS-232C is not available.	Check that the RS-232C crossover cable is correctly connected.	P.50
Control via LAN is not available.	Check that the LAN cable (Cat.5 or higher) is correctly connected.	P.51
	Check that the Network Settings are correctly configured.	P.51

When using a media player

Symptom	Cause and solution	Reference
The media player function does not recognize the USB storage device.	Check that a USB storage device is correctly connected to the USB port.	P.30

When using a video device

Symptom	Cause and solution	Reference
There is no image and no sound.	Check that the external device (video player, etc.) is correctly connected and operates properly. For more information, see the manual of the external device.	P.25
	The power management function of the monitor may be functioning. Check that the external device is operating (playing).	
There is no color or the colors are abnormal.	Adjust the [Color] setting.	P.74

Specifications

Compatible Signal List

Resolution	Refresh rate (Hz)	Component	HDMI video				
			E328	E438	E498	E558	E658
640 x 480p	60	●	●				
720 x 480i	60	●	●				
720 x 480p	60	●	●				
720 x 576i	50	●	●				
720 x 576p	50	●	●				
1280 x 720p	50	●	●				
1280 x 720p	60	●	●				
1920 x 1080i	50	●	●				
	60						
1920 x 1080p	24	●	●				
	25						
	30						
	50						
	60						
3840 x 2160p	24	—	—	●	●	●	●
	25	—	—	●	●	●	●
	30	—	—	●	●	●	●
	50	—	—	●	●	●	●
	60	—	—	●	●	●	●
4096 x 2160p	24	—	—	●	●	●	●
	25	—	—	●	●	●	●
	30	—	—	●	●	●	●
	50	—	—	●	●	●	●
	60	—	—	●	●	●	●

Resolution	Refresh rate (Hz)	VGA					HDMI PC				
		E328	E438	E498	E558	E658	E328	E438	E498	E558	E658
720 x 400	70	●					●				
640 x 480	60	●					●				
800 x 600	56	●					●				
	60	●					●				
1024 x 768	60	●					●				
1280 x 720	60	●					●				
1280 x 800	60	●					●				
1280 x 960	60	●					●				
1280 x 1024	60	●					●				
	75	●					●				
1400 x 1050	60 (RB*)	●					●				
1440 x 900	60	●					●				
1600 x 1200	60	●					●				
1680 x 1050	60	●					●				
1920 x 1080	60	●					●				
3840 x 2160	30	—					—	●	●	●	●
	60	—					—	●	●	●	●
1366 x 768	60	—					●	●	●	●	●
1920 x 1440	60	—					—	●	●	●	●
2560 x 1600	60	—					—	●	●	●	●

* RB: Reduced blanking signal

NOTE

- Depending on the input signal's resolution, characters may look blurred or figures may be distorted.
- Depending on the video card or driver used, the image may not be shown correctly.

E328

Size (display size)	32"/801.3 mm diagonal
Type of LCD	Active Matrix Color TFT LCD
Viewable Size	698.40 x 392.85 mm
Resolution	1920 x 1080
Pixel Pitch	0.364 mm

Color				Approx. 16.77 million colors (depends on the video card)
Brightness				350 cd/m^2 (Max.) (@25 °C)
Frequency	Horizontal			31 – 83 kHz (analog input) 15.625/15.734 kHz, 31 – 136 kHz (digital input)
	Vertical			56 Hz, 60 Hz, 70 Hz, 75 Hz (analog input) 24 Hz, 30 Hz, 50 Hz, 60 Hz, 70 Hz, 75 Hz (digital input)
Pixel Clock				13.5 MHz, 25 MHz – 156 MHz (analog input) 25 MHz – 600 MHz (digital input)
Input Terminals	VGA (RGB) *2	15 Pin D-sub	Analog RGB signal	0.7 Vp-p/75 Ω
	VGA (YPbPr)*2	15 Pin D-sub	Component signal	Luma Y: 1.0 Vp-p/75 Ω, Color Cb/Cr (Pb/Pr): 0.7 Vp-p/75 Ω
	Video	3.5φ Mini Jack	Composite signal	1.0 Vp-p/75 Ω
	HDMI	HDMI terminal	Digital YUV Digital RGB	HDCP 1.4/2.2
Audio Terminals	Audio input	Stereo Mini Jack 3.5 mm Ø	Analog audio signal	Stereo L/R 0.5 Vrms
		HDMI terminal	Digital audio signal	PCM 2 ch 32, 44.1, 48 kHz (16/20/24 bits)
	Audio output	Stereo Mini Jack 3.5 mm Ø	Analog audio signal	For headphones output
		S/PDIF terminal	Digital audio signal	For digital audio output
		HDMI (ARC) terminal*3	Digital audio signal	PCM 2 ch 32, 44.1, 48 kHz (16/20/24 bits)
Speaker Output				Internal Speakers 5 W + 5 W (Stereo)
Control Terminals	RS-232C			9 Pin D-sub x1
	LAN			RJ-45 10BASE-T / 100BASE-TX
USB Terminal	USB Type-A port			For media player, DC 5 V / 500 mA (max)
	USB Type-C port			For power supply, DC 5 V / 3 A (max)
Operational Environment	Temperature			0 – 40 °C / 32 – 104 °F
	Humidity			20 – 80 % (without condensation)
	Altitude			0 – 3000 m
Storage Environment	Temperature			–20 – 60 °C / –4 – 140 °F
	Humidity			10 – 80 % (without condensation)

Power Supply	Power input		AC 100 – 240 V 50/60 Hz
	Input current		0.9 – 0.4 A
	Consumption	Full operation	85 W (standard value)
		During power save	2.0 W or less*1
		During standby	0.5 W or less*1
Weight			Approx. 5.7 kg (12.5 lbs)
Inclination Angle			±10°

Dimensions
*1 When used with the default settings.
*2 Common terminal.
*3 HDMI1 only.
Technical specifications are subject to change without notice.

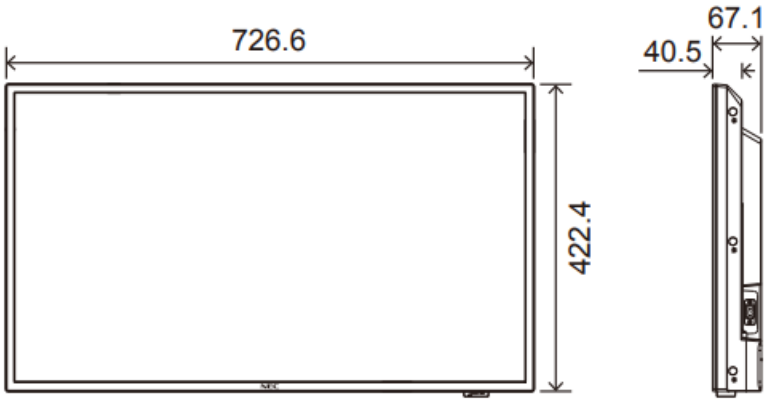

Unit: mm

E438

Size (display size)		43”/1080 mm diagonal
Type of LCD		Active Matrix Color TFT LCD
Viewable Size		941.18 x 529.42 mm
Resolution		3840 x 2160
Pixel Pitch		0.245 mm
Color		Over 1073 million colors
Brightness		350 cd/m^2 (Max.) (@25 °C)
Frequency	Horizontal	31 – 83 kHz (analog input) 15.625/15.734 kHz, 31 – 136 kHz (digital input)
	Vertical	56 Hz, 60 Hz, 70 Hz, 75 Hz (analog input) 24 Hz, 30 Hz, 50 Hz, 60 Hz, 70 Hz, 75 Hz (digital input)

Pixel Clock				13.5 MHz, 25 MHz – 162 MHz (analog input) 25 MHz – 600 MHz (digital input)
Input Terminals	VGA (RGB) *2	15 Pin D-sub	Analog RGB signal	0.7 Vp-p/75 Ω
	VGA (YPbPr)*2	15 Pin D-sub	Component signal	Luma Y: 1.0 Vp-p/75 Ω, Color Cb/Cr (Pb/Pr): 0.7 Vp-p/75 Ω
	Video	3.5φ Mini Jack	Composite signal	1.0 Vp-p/75 Ω
	HDMI	HDMI terminal	Digital YUV Digital RGB	HDCP 1.4/2.2
Audio Terminals	Audio input	Stereo Mini Jack 3.5 mm Ø	Analog audio signal	Stereo L/R 0.5 Vrms
		HDMI terminal	Digital audio signal	PCM 2 ch 32, 44.1, 48 kHz (16/20/24 bits)
	Audio output	Stereo Mini Jack 3.5 mm Ø	Analog audio signal	For headphones output
		S/PDIF terminal	Digital audio signal	For digital audio output
		HDMI (ARC) terminal*3	Digital audio signal	PCM 2 ch 32, 44.1, 48 kHz (16/20/24 bits)
Speaker Output				Internal Speakers 10 W + 10 W (Stereo)
Control Terminals	RS-232C			9 Pin D-sub x1
	LAN			RJ-45 10BASE-T / 100BASE-TX
USB Terminal	USB Type-A port			For media player, DC 5 V / 500 mA (max)
	USB Type-C port			For power supply, DC 5 V / 3 A (max)
Operational Environment	Temperature			0 – 40 °C / 32 – 104 °F
	Humidity			20 – 80 % (without condensation)
	Altitude			0 – 3000 m
Storage Environment	Temperature			–20 – 60 °C / –4 – 140 °F
	Humidity			10 – 80 % (without condensation)
Power Supply	Power input			AC 100 – 240 V 50/60 Hz
	Input current			1.5 – 0.6 A
	Consumption		Full operation	135 W (standard value)
			During power save	2.0 W or less*1
			During stand by	0.5 W or less*1

Weight	Approx. 10.2 kg (22.4 lbs)
Inclination Angle	±10°

Dimensions
*1 When used with the default settings.
*2 Common terminal.
*3 HDMI1 only.
Technical specifications are subject to change without notice.

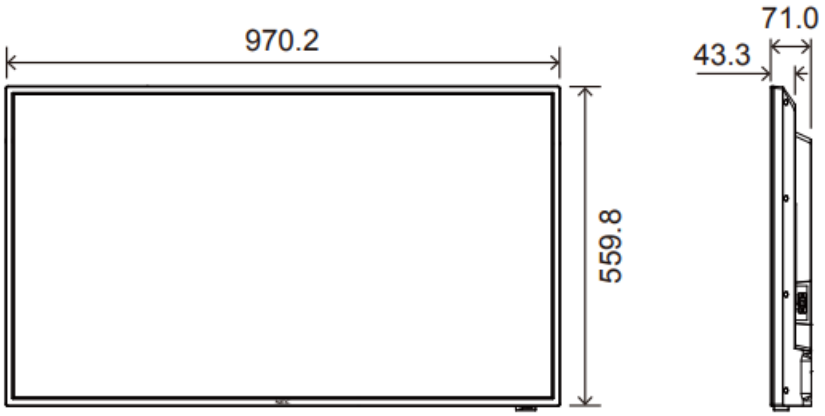

Unit: mm

E498

Size (display size)				49”/1232 mm diagonal
Type of LCD				Active Matrix Color TFT LCD
Viewable Size				1073.80 x 604.00 mm
Resolution				3840 x 2160
Pixel Pitch				0.280 mm
Color				Over 1073 million colors
Brightness				350 cd/m^2 (Max.) (@25 °C)
Frequency	Horizontal			31 – 83 kHz (analog input) 15.625/15.734 kHz, 31 – 136 kHz (digital input)
	Vertical			56 Hz, 60 Hz, 70 Hz, 75 Hz (analog input) 24 Hz, 30 Hz, 50 Hz, 60 Hz, 70 Hz, 75 Hz (digital input)
Pixel Clock				13.5 MHz, 25 MHz – 162 MHz (analog input) 25 MHz – 600 MHz (digital input)
Input Terminals	VGA (RGB) *2	15 Pin D-sub	Analog RGB signal	0.7 Vp-p/75 Ω
	VGA (YPbPr)*2	15 Pin D-sub	Component signal	Luma Y: 1.0 Vp-p/75 Ω, Color Cb/Cr (Pb/Pr): 0.7 Vp-p/75 Ω
	Video	3.5φ Mini Jack	Composite signal	1.0 Vp-p/75 Ω

	HDMI	HDMI terminal	Digital YUV D igital RGB	HDCP 1.4/2.2
Audio Te rminals	Audio input	Stereo Mini Jac k 3.5 mm Ø	Analog audio signal	Stereo L/R 0.5 Vrms
		HDMI terminal	Digital audio signal	PCM 2 ch 32, 44.1, 48 kHz (16/20/24 bits)
	Audio outp ut	Stereo Mini Jac k 3.5 mm Ø	Analog audio signal	For headphones output
		S/PDIF terminal	Digital audio signal	For digital audio output
		HDMI (ARC) te rminal[*3]	Digital audio signal	PCM 2 ch 32, 44.1, 48 kHz (16/20/24 bits)
Speaker Output				Internal Speakers 10 W + 10 W (Stereo)
Control T erminals	RS-232C			9 Pin D-sub x1
	LAN			RJ-45 10BASE-T / 100BASE-TX
USB Ter minal	USB Type-A port			For media player, DC 5 V / 500 mA (max)
	USB Type-C port			For power supply, DC 5 V / 3 A (max)
Operatio nal Envir onment	Temperature			0 – 40 °C / 32 – 104 °F
	Humidity			20 – 80 % (without condensation)
	Altitude			0 – 3000 m
Storage Environm ent	Temperature			–20 – 60 °C / –4 – 140 °F
	Humidity			10 – 80 % (without condensation)
Power S upply	Power input			AC 100 – 240 V 50/60 Hz
	Input current			2.1 – 0.8 A
	Consumption		Full operation	185 W (standard value)
			During power save	2.0 W or less[*1]
			During stand by	0.5 W or less[*1]
Weight				Approx. 12.1 kg (26.7 lbs)
Inclination Angle				±10°

Dimensions
*1 When used with the default settings.
*2 Common terminal.
*3 HDMI1 only.
Technical specifications are subject to change without notice.

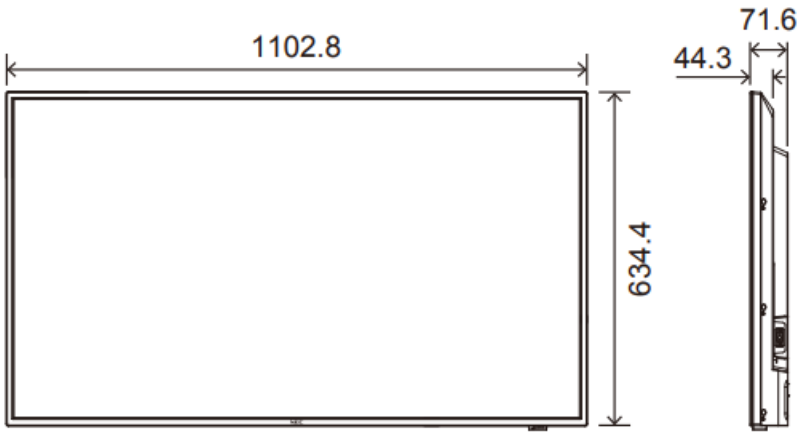

Unit: mm

E558

Size (display size)				55”/1388 mm diagonal
Type of LCD				Active Matrix Color TFT LCD
Viewable Size				1209.60 x 680.40 mm
Resolution				3840 x 2160
Pixel Pitch				0.315 mm
Color				Over 1073 million colors
Brightness				350 cd/m^2 (Max.) (@25 °C)
Frequency	Horizontal			31 – 83 kHz (analog input) 15.625/15.734 kHz, 31 – 136 kHz (digital input)
	Vertical			56 Hz, 60 Hz, 70 Hz, 75 Hz (analog input) 24 Hz, 30 Hz, 50 Hz, 60 Hz, 70 Hz, 75 Hz (digital inp ut)
Pixel Clock				13.5 MHz, 25 MHz – 162 MHz (analog input) 25 MH z – 600 MHz (digital input)
Input Ter minals	VGA (RG B)*2	15 Pin D-sub	Analog RGB signal	0.7 Vp-p/75 Ω
	VGA (YPb Pr)*2	15 Pin D-sub	Component s ignal	Luma Y: 1.0 Vp-p/75 Ω, Color Cb/Cr (Pb/Pr): 0.7 Vp -p/75 Ω
	Video	3.5φ Mini Jack	Composite si gnal	1.0 Vp-p/75 Ω
	HDMI	HDMI terminal	Digital YUV D igital RGB	HDCP 1.4/2.2

Audio Terminals	Audio input	Stereo Mini Jack 3.5 mm Ø	Analog audio signal	Stereo L/R 0.5 Vrms
		HDMI terminal	Digital audio signal	PCM 2 ch 32, 44.1, 48 kHz (16/20/24 bits)
	Audio output	Stereo Mini Jack 3.5 mm Ø	Analog audio signal	For headphones output
		S/PDIF terminal	Digital audio signal	For digital audio output
		HDMI (ARC) terminal[*3]	Digital audio signal	PCM 2 ch 32, 44.1, 48 kHz (16/20/24 bits)
Speaker Output				Internal Speakers 10 W + 10 W (Stereo)
Control Terminals	RS-232C			9 Pin D-sub x1
	LAN			RJ-45 10BASE-T / 100BASE-TX
USB Terminal	USB Type-A port			For media player, DC 5 V / 500 mA (max)
	USB Type-C port			For power supply, DC 5 V / 3 A (max)
Operational Environment	Temperature			0 – 40 °C / 32 – 104 °F
	Humidity			20 – 80 % (without condensation)
	Altitude			0 – 3000 m
Storage Environment	Temperature			–20 – 60 °C / –4 – 140 °F
	Humidity			10 – 80 % (without condensation)
Power Supply	Power input			AC 100 – 240 V 50/60 Hz
	Input current			2.1 – 0.8 A
	Consumption		Full operation	185 W (standard value)
			During power save	2.0 W or less[*1]
			During stand by	0.5 W or less[*1]
Weight				Approx. 16.8 kg (37.0 lbs)
Inclination Angle				±10°

Dimensions
*1 When used with the default settings.
*2 Common terminal.
*3 HDMI1 only.
Technical specifications are subject to change without notice.

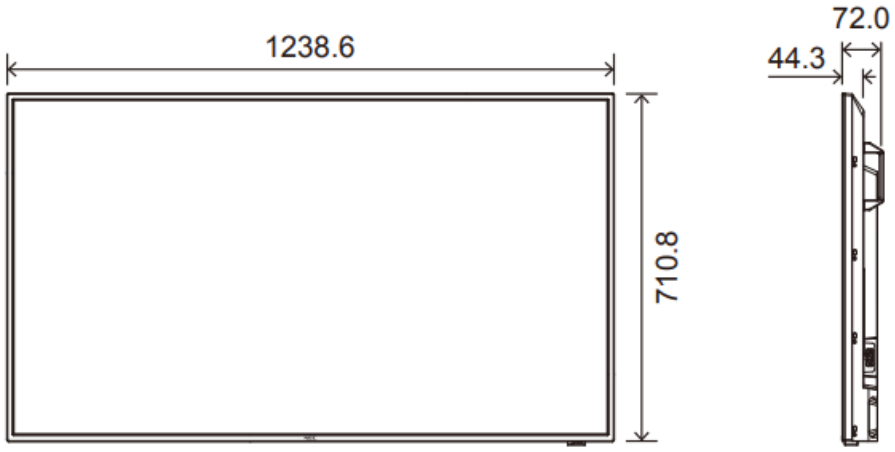

Unit: mm

E658

Size (display size)				65”/1639 mm diagonal
Type of LCD				Active Matrix Color TFT LCD
Viewable Size				1428.48 x 803.52 mm
Resolution				3840 x 2160
Pixel Pitch				0.372 mm
Color				Over 1073 million colors
Brightness				350 cd/m^2 (Max.) (@25 °C)
Frequency	Horizontal			31 – 83 kHz (analog input) 15.625/15.734 kHz, 31 – 136 kHz (digital input)
	Vertical			56 Hz, 60 Hz, 70 Hz, 75 Hz (analog input) 24 Hz, 30 Hz, 50 Hz, 60 Hz, 70 Hz, 75 Hz (digital in put)
Pixel Clock				13.5 MHz, 25 MHz – 162 MHz (analog input) 25 MH z – 600 MHz (digital input)
Input Ter minals	VGA (RGB) *2	15 Pin D-sub	Analog RGB signal	0.7 Vp-p/75 Ω
	VGA (YPbPr)*2	15 Pin D-sub	Component s ignal	Luma Y: 1.0 Vp-p/75 Ω, Color Cb/Cr (Pb/Pr): 0.7 Vp -p/75 Ω
	Video	3.5φ Mini Jack	Composite si gnal	1.0 Vp-p/75 Ω
	HDMI	HDMI terminal	Digital YUV D igital RGB	HDCP 1.4/2.2

Audio Terminals	Audio input	Stereo Mini Jack 3.5 mm Ø	Analog audio signal	Stereo L/R 0.5 Vrms
		HDMI terminal	Digital audio signal	PCM 2 ch 32, 44.1, 48 kHz (16/20/24 bits)
	Audio output	Stereo Mini Jack 3.5 mm Ø	Analog audio signal	For headphones output
		S/PDIF terminal	Digital audio signal	For digital audio output
		HDMI (ARC) terminal[*3]	Digital audio signal	PCM 2 ch 32, 44.1, 48 kHz (16/20/24 bits)
Speaker Output				Internal Speakers 10 W + 10 W (Stereo)
Control Terminals	RS-232C			9 Pin D-sub x1
	LAN			RJ-45 10BASE-T / 100BASE-TX
USB Terminal	USB Type-A port			For media player, DC 5 V / 500 mA (max)
	USB Type-C port			For power supply, DC 5 V / 3 A (max)
Operational Environment	Temperature			0 – 40 °C / 32 – 104 °F
	Humidity			20 – 80 % (without condensation)
	Altitude			0 – 3000 m
Storage Environment	Temperature			–20 – 60 °C / –4 – 140 °F
	Humidity			10 – 80 % (without condensation)
Power Supply	Power input			AC 100 – 240 V 50/60 Hz
	Input current			2.5 – 1.0 A
	Consumption		Full operation	225 W (standard value)
			During power save	2.0 W or less[*1]
			During stand by	0.5 W or less[*1]
Weight				Approx. 23.3 kg (51.3 lbs)
Inclination Angle				±10°

Dimensions
*1 When used with the default settings.
*2 Common terminal.
*3 HDMI1 only.
Technical specifications are subject to change without notice.

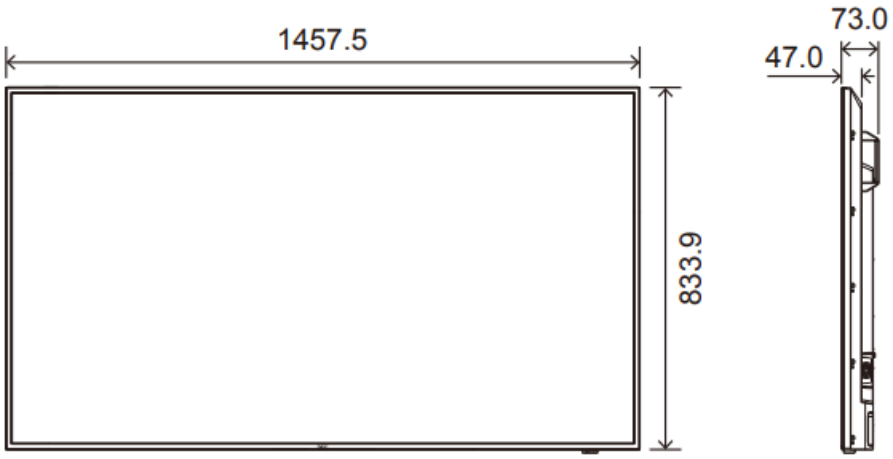

Unit: mm

Trademark and Software License

Microsoft® and Windows® are either registered trademarks or trademarks of Microsoft Corporation in the United States and/or other countries.
The terms HDMI and HDMI High-Definition Multimedia Interface, and the HDMI Logo are trademarks or registered trademarks of HDMI Licensing Administrator, Inc. in the United States and other countries.
Manufactured under license from Dolby Laboratories.
Dolby, Dolby Audio, Pro Logic, and the double-D symbol are trademarks of Dolby Laboratories Licensing Corporation.
NaViSet is a trademark or registered trademark of NEC Display Solutions, Ltd. in Japan and other countries.
CRESTRON and CRESTRON ROOMVIEW are trademarks or registered trademarks of Crestron Electronics, Inc. in the United States and other countries.
Blu-ray is a trademark of Blu-ray Disc Association.
All other brands and product names are trademarks or registered trademarks of their respective owners.

[Notice] About the MPEG-4 AVC, MPEG-4 Visual license included in this product

1. MPEG AVC
   THIS PRODUCT IS LICENSED UNDER THE AVC PATENT PORTFOLIO LICENSE FOR THE PERSONAL USE OF A CONSUMER OR OTHER USES IN WHICH IT DOES NOT RECEIVE REMUNERATION TO (i) ENCODE VIDEO IN COMPLIANCE WITH THE AVC STANDARD (“AVC VIDEO”) AND/OR (ii) DECODE AVC VIDEO THAT WAS ENCODED BY A CONSUMER ENGAGED IN A PERSONAL ACTIVITY AND/OR WAS OBTAINED FROM A VIDEO PROVIDER LICENSED TO PROVIDE AVC VIDEO. NO LICENSE IS GRANTED OR SHALL BE IMPLIED FOR ANY OTHER USE. ADDITIONAL INFORMATION MAY BE OBTAINED FROM MPEG LA, L.L.C. SEE **http://WWW.MPEGLA.COM**
2. MPEG-4 Visual
   THIS PRODUCT IS LICENSED UNDER THE MPEG-4 VISUAL PATENT PORTFOLIO LICENSE FOR THE

PERSONAL AND NON-COMMERCIAL USE OF A CONSUMER FOR (i) ENCODING VIDEO IN COMPLIANCE WITH THE MPEG-4 VISUAL STANDARD ("MPEG-4 VIDEO") AND/OR (ii) DECODING MPEG-4 VIDEO THAT WAS ENCODED BY A CONSUMER ENGAGED IN A PERSONAL AND NONCOMMERCIAL ACTIVITY AND/OR WAS OBTAINED FROM A VIDEO PROVIDER LICENSED BY MPEG LA TO PROVIDE MPEG-4 VIDEO. NO LICENSE IS GRANTED OR SHALL BE IMPLIED FOR ANY OTHER USE. ADDITIONAL INFORMATION INCLUDING THAT RELATING TO PROMOTIONAL, INTERNAL AND COMMERCIAL USES AND LICENSING MAY BE OBTAINED FROM MPEG LA, LLC. SEE **http://WWW.MPEGLA.COM**.

External Resources

Additional specification documents and accessories, and optional software applications referenced in this product manual are listed below.

NEC Display Solutions regional Websites

Global: **https://www.nec-display.com/global/**
Asia-Pacific: **https://www.nec-display.com/ap/contact/**
North America: **https://www.necdisplay.com**
Europe, Russia, Middle East and Africa: **https://www.nec-display-solutions.com**
Japan: **https://www.nec-display.com/jp/**

Additional Documentation

"NEC LCD Monitor – External Control" PDF document

This document defines the communications protocol for externally controlling and querying the monitor via either RS-232C or LAN. The protocol uses encoded binary and requires calculation of checksums, and most functionality in the monitor can be controlled using these commands.
This document is available for download from the NEC Display Solutions Website in your region.

Software

Software is available for download on the NEC Display Solutions global Website.
https://www.nec-display.com/dl/en/dp_soft/lineup.html

NaViSet Administrator software

This free software is an advanced and powerful network-based control, monitoring and asset management system for NEC Display monitors and projectors. The software is available for Microsoft Windows and macOS.
The latest version of the NaViSet Administrator software is available on the NEC Display Solutions Website.

OSD Controls List

See the NEC Display Solutions Website for the default values.

Video Settings

Video			
Picture Mode			Provides pre-configured video settings suitable for various environments where this device may be used, or customize settings to your preference.
	HDR Video		Video setting for the HDR format. (Can be selected only when an HDR signal is inp ut.)
	Dynamic		High-contrast video setting.
	Standard		Standard setting.
	Energy Savings		Video setting complying with International Energy Star standard.
	Conferencing		Video setting suited for video conferences.
	HighBright		Maximum backlight brightness with higher color temperature for brighter ambient environments.
	Custom		Customizable settings.
Advanced Video			Menu used to adjust detailed video settings.
	Aspect Ratio		Select the aspect ratio of the screen image. For more information, see “Setting the Aspect Ratio” in this manual. **NOTE:** • [Zoom] cannot be used when a 4K signal is input. (E438/E498/E558/E658) • [Zoom] cannot be used when an FHD signal is input. (E328)
		Normal	Maximizes the size without changing the aspect ratio.
		1:1	Shows the image in a 1 by 1 pixel format. (If the input resolution is higher than the r ecommended resolution, the image will be scaled down to fit the screen).
		Full	Fills the entire screen even if the aspect ratio needs to be changed.
		Zoom	Fills the entire screen without changing the aspect ratio. **NOTE:** The areas of the image that are outside of the active screen area are not sh own.
	Overscan		Selects the image display area.
		Auto	The image display area is set automatically.
		On	Approximately 95 % of the image will be shown on the screen.
		Off	The whole image is displayed within the screen area. This setting may cause noise at the edges of the screen depending on the signal. **NOTE:** When you use a computer with an HDMI output, set it to [OFF].
	Dimming Setting		The brightness of the backlight is optimized, while the contrast can be increased an d the consumption reduced.
		Off	The backlight is not controlled.
		Dynamic Backlight	Automatically adjusts the brightness level of the entire screen according to the input signal.
		Local Dimming	Automatically adjusts each of the clusters of the LCD backlight independently accor ding to the input signal. (All models except E328)

Video

	Color Temperature		Adjusts the color temperature of the entire screen. A low color temperature will result in a reddish screen. A high color temperature will make the screen bluish. If a temperature needs further adjustment, the individual R/G/B/ levels of the white point can be adjusted.
		Cool	High color temperature setting. The screen will be bluish.
		Normal	Intermediate setting.
		Warm	Low color temperature setting. The screen will be reddish.
		Native	Turns the color temperature adjustment off and displays the image with the panel characteristics.
		Custom	Customizable settings.
	Noise Reduction		Reduces the image noise.
	Adaptive Contrast		Adjusts automatically the contrast according to the image. If [High] is set, the image is shown clearly but the brightness variation may appear not natural.
	Gamma		Adjusts the brightness of gray and other intermediate colors. (SDR)
		Native	Gamma correction is handled by the LCD panel.
		2.2	Typical monitor gamma for use with a computer.
		2.4	Typical gamma settings for use with video devices, such as DVDs and Blu-rays.
	Ambient Light Sensing		Adjusts automatically the brightness of the screen depending on ambient light withi n the room. When set to [On], the brightness of the screen is adjusted automatically according to the room brightness. **NOTE:** When set to [ON], [Backlight / Brightness] cannot be changed.
	Color Enhance		Changes the colors of the image and the saturation to create a more colorful image .
	HDR Mode		When the monitor detects an HDR signal, you can select preferred gamma correction from [Low], [Mid] and [High].
Backlight / Brightness			Adjusts the brightness of the image using the backlight. Press the ◀ and ▶ the buttons to adjust the brightness. In general, use this function to adjust the brightness. **NOTE:** When [On] is selected in [Ambient Light Sensing], this function cannot be ch anged.
Contrast			Adjusts the contrast. Press the ◀ and ▶ the buttons to adjust the contrast.
Video Black Level			Set the black level of the screen. When the setting is too low to show, the OSD char acters are changed to green.
Sharpness			Adjusts the sharpness of the image. Press the ▶ button to sharpen the image, or the ◀ button to soften it. **NOTE:** The lines may appear as double lines depending on the setting. In such a case, lower the sharpness setting.
Color			Adjusts the color density of the screen. Press the ▶ button to increase the density, or the ◀ button to decrease it.
Tint			Adjusts the tint of the image between R0-R50 and G0-G50.

Reset Video Settings	Returns all settings in the Video menu to their default values.

Audio Settings

Audio		
Sound Mode		Set pre-configured audio settings suitable for various environments where the monit or may be used, or customize settings to your preference.
	Standard	Standard sound setting.
	Music	Optimized settings for music playback or audio in conference rooms.
	Movie	Surround sound for clarity in retail stores and other signage applications.
	Custom	Customizable settings.
Balance		Press the ▶ button to move the audio signal to the right. Press the ◀ button to mov e the audio signal to the left.
Surround		Artificially produces surround sound audio.
Internal Speakers		Configures the settings for the internal speakers output.
	Auto	The sound is not output from the speakers when a cable is connected to the HEAD PHONE terminal.
	Off	Sound is not output from the speakers.
	On	Sound is always output from the speakers.
Digital Output		Select the optical digital audio format of the S/PDIF terminal. **RAW:** Outputs in the RAW format. **PCM:** Outputs in the PCM format.
Audio Input		Selects whether to use the audio signal of the Audio In terminal when the audio sig nal is not included in the HDMI signal (DVI signals, etc.). **HDMI:** The HDMI terminal is used. **Audio in:** The Audio in terminal is used.
Audio Delay		Adjusts the delay time until the audio is output.
Reset Audio Settings		Returns all settings in the Audio menu to their default values.

Setup

Setup		
OSD Settings		
	Language	Select the language used in the OSD.
	Transparency	Set the transparency level of the OSD menu between 30%, 50%, 70% and Off. The higher the percentage, the more transparent is the OSD menu.
	Information OSD	Displays or hides the Information OSD. Information OSD contains the messages that are displayed on the screen when the input is switched or when the state of the input signal changes.

Power save settings		
	Energy Mode	Select a mode between Home, Retail, and Office. For more information, see “Energ y Mode” page 33.
	Power Save	Sets the time until the monitor enters the Power Save mode. When the set time has elapsed after the input signal has been lost, the Power Save function is activated.
	Quick Start	When set to [On], the monitor consumes more power but the display recovery time i s shortened when a video signal is input.
	Auto Power Down	When turned On, the monitor turns automatically off after 4 hours without any opera tion.
Auto Input Change		When there are several inputs, this function switches automatically to the terminal t o which a signal is input. Press the INFO button of the remote control to display the selected input terminal o n the Information OSD.
	None	The input terminal is changed manually.
	First	If the signal is lost in the input terminal being displayed, the monitor searches auto matically another terminal with an input signal and switches to it.The display does n ot change if a new signal is input into a terminal different from the terminal currently being displayed.
	Custom	The input terminals included in the search performed by the monitor can be selecte d. **NOTE:** When the AV terminal and VGA (YPbPr) terminal are selected, the On mode is not resumed even if a signal is input in the energy-saving mode.
HDMI Settings		
	CEC	This function makes it possible to control a device supporting HDMI CEC connected to the HDMI terminal. When set to On, HDMI CEC is enabled.
	EDID	Sets the HDMI mode. **Mode 0:** Max resolution is 1920 x 1080 (60 Hz). **Mode 1:** Max resolution is 3840 x 2160 (30 Hz). **Mode 2:** Max resolution is 3840 x 2160 (60 Hz), HDCP 2.2, or HDR.
	Video Range	Adjust the gradation range to be shown according to the video signal to improve the whiteout and blackout of the image.
	HPD Delay	This function makes it possible to control the time until the video from the HDMI ter minal is displayed. When set to Off, the time until the video is output can be reduced but the video may not be output depending on the device. In such a case, set [HPD Delay] to On.

Setup		
VGA Options		Enabled when a VGA signal is input.
	VGA Mode	Select [RGB] or [YPbPr] depending on the signal received into the VGA input termi nal.
	Auto Adjust	Automatically adjusts settings such as the image position.

	H.Position	Adjusts the horizontal position of the screen. Press the ▶ button to move the screen to the right or the ◀ button to move it to the l eft.
	V.Position	Adjusts the vertical position of the screen. Press the ▶ button to move the screen to the top or the ◀ button to move it to the b ottom.
	Clock	Adjust this setting when vertical lines appear on the screen or when the size differs at the right and left of the screen.
	Phase	Adjust this setting when noise appears in the horizontal direction, when the charact ers are blurred, or when the contours are not sharp.
	H.Resolution	The video can be enlarged/reduced in the horizontal direction using this function on ly when [Standard] is selected in [Aspect Ratio]. **NOTE:** This function may not operate depending on the input signal.
	V.Resolution	The video can be enlarged/reduced in the vertical direction using this function only when [Standard] is selected in [Aspect Ratio]. **NOTE:** This function may not operate depending on the input signal.
	Reset VGA Options	Resets the VGA Options settings to their default values.
Other settings		
	Input Labels	Renames the input terminal currently being displayed. Letters (A-Z), numbers (0-9), and some symbols can be used.
	Key Lock Settings	Prevents the monitor from being controlled using the buttons on the monitor control panel. **Off:** All buttons operate normally. **Mode 1:** Only the power button and the input switching function operate. **Mode 2:** All buttons are locked. (Only the power button can be used during standby mode.)
	IR Lock Settings	Prevents the monitor from being controlled using the remote control. **OffE:** All buttons operate normally. **Mode 1:** Only the POWER and the SOURCE buttons operate. **Mode 2:** All buttons are locked. (Only the power button can be used during standby mode.)
	Power supply	You can configure the power supply to the USB Type-C port. The power consumption increases when set to [On].
	LED Indicator	Set it to Off to turn off the power indicator when the monitor is turned on (normally li t blue).
	Mute Settings	You can change the effect of the MUTE button of the remote control. **Audio:** Mutes only the audio files. **Video:** Mutes only the video files. **Audio & Video:** Mutes the audio and the video files.
	Thermal Management	The monitor is equipped with thermal sensors and displays a warning when the am bient temperature exceeds the operation guaranteed temperature. If a warning is di splayed, turn the monitor off since using the monitor in such environment may caus e a malfunction. **Warning Message:** A temperature warning is displayed on the screen when the int ernal temperature has exceeded the operation guaranteed temperature. **Shutdown:** The monitor turns off automatically when the internal temperature has exceeded the operation guaranteed temperature.

	Signal Information	Displays the information regarding the input signal.
Monitor Information		Displays the information regarding the monitor.
Factory Reset		All settings except network are returned to factory default.

Control Settings

Control Settings		
Control Interface		**NOTE:** Only one method, LAN or RS-232, can be used at the same time.
	LAN	Sets network (LAN) control.
	RS-232C	Sets RS-232C control.
Network Settings		Configures the network settings of the monitor.
	DHCP	**On:** Obtains the network settings from the DHCP server on the network. **Off:** Sets fixed networks settings. **Manual DNS:** Obtain the network settings from the DHCP server on the network bu t the DNS is set manually.
	IP ADDRESS	Set the IP address of the monitor when [DHCP] is set to [Off].
	SUBNET MASK	Set the subnet mask for the network to which the monitor is connected when [Off] is selected for [DHCP].
	DEFAULT GATEWAY	Set the default gateway for the network to which the monitor is connected when [Off] is selected for [DHCP].
	DNS PRIMARY	Enter the IP address of the primary DNS server of the network connected to the mo nitor. **NOTE:** Enter [0.0.0.0] to delete the setting.
	DNS SECONDARY	Enter the IP address of the secondary DNS server of the network connected to the monitor. **NOTE:** Enter [0.0.0.0] to delete the setting.
	MAC ADDRESS	Shows the monitor’s MAC ADDRESS. This cannot be changed.
	SAVE	Saves the settings.
Monitor ID		Sets an ID number for control. The monitor ID number can be set between 1 and 100.
Reset Network Settings		Returns the network settings to their default values.

Media Player

Media Player	
USB Demo Mode	Photos (still pictures), music and video files saved in the “NDS_DEMO” folder in th e USB storage device can be played automatically. You can select the types of files to play in the USB Demo Mode. **NOTE:** **Enabling USB Demo Mode** To enable the USB Demo Mode, [Energy Mode] in the [Setup] menu must be set to [Retail]. **NOTE:** **Starting USB Demo Mode** The playback of the files starts automatically under the following conditions. • The USB Demo Mode has been enabled. • A folder named “NDS_DEMO” exists in the USB storage device. • To signal is being input in a terminal other than the USB port. • There was no user operation for 10 seconds or more. **NOTE:** **Memo** • The POWER, VOLUME, and MUTE buttons of the remote control operate normall y. If other buttons are pressed, the playback stops and the input returns to the termi nal used previously. • The playback is also stopped is the USB storage device is removed. • If the monitor is turned off during playback in USB Demo Mode, the next time the monitor is turned on, playback will start automatically if the USB storage device is st ill connected.
UnPlug USB Device	Select [Execute] before removing the USB device.
Caution Window	Sets whether to display a caution window (On) or not (Off) when a file with a format or a codec not supported by the monitor is played.

Schedule

Schedule	
Sleep Timer	Sets the time until the monitor turns off automatically. Off, 10 minutes, 15 minutes, 30 minutes, 60 minutes, 90 minutes, 120 minutes, 180 minutes, 240 minutes can be selected.
Current Time settings	Sets the current time. **NOTE:** If the monitor remains for two weeks or more with the power cord unplugged, the clock will not show the correct time. In this case, set the [Current Time settings] again.
Schedule settings	**Power On:** Sets the time when the monitor will turn on. **Power Off:** Sets the time when the monitor will turn off.

Manufacturer’s Recycling and Energy Information

NEC DISPLAY SOLUTIONS is strongly committed to environmental protection and sees recycling as one of the company’s top priorities in trying to minimize the burden placed on the environment. We are engaged in developing environmentally friendly products, and always strive to help define and comply with the latest independent standards from agencies such as ISO (International Organization for Standardization) and TCO (Swedish Trades Union).

Disposing of your old NEC product

The aim of recycling is to gain an environmental benefit by means of re-use, upgrading, reconditioning or reclamation of material. Dedicated recycling sites ensure that environmentally harmful components are properly

handled and securely disposed. To ensure the best recycling of our products, NEC DISPLAY SOLUTIONS offers a variety of recycling procedures and gives advice on how to handle the product in an environmentally sensitive way, once it has reached the end of its life.
All required information concerning the disposal of the product and country-specific information on recycling facilities can be found on our following websites:
https://www.nec-display-solutions.com/p/greenvision/en/greenvision.xhtml (in Europe)
https://www.nec-display.com (in Japan)
https://www.necdisplay.com (in USA).

Energy Saving
This monitor features an advanced energy saving capability. When a Display Power Management signal is sent to the monitor, the Energy Saving mode is activated. The monitor enters a single Energy Saving mode.
For additional information visit:
https://www.necdisplay.com/ (in USA)
https://www.nec-display-solutions.com/ (in Europe)
https://www.nec-display.com/global/index.html (Global)
For ErP requirement/For ErP (Network standby) requirement:
Except for conditions below:
[Energy Mode] is set to [Retail mode] or [Office mode].
[Quick Start] is set to [On].
[Auto Input Change] is set to [First] or [Custom].
[Power supply] is set to [On].
Power consumption (Flashing red): 2.0 W or less.
Time for power management function: 60 sec. (Default setting).
Power consumption (Lit red): 0.5 W or less.
Time for power management function: 3 min. (Default setting).

WEEE Mark (European Directive 2012/19/EU and amendments)
Disposing of your used product: In the European Union
EU-wide legislation as implemented in each Member State requires that used electrical and electronic products carrying the mark (left) must be disposed of separately from normal household waste. This includes monitors and electrical accessories, such as signal cables or power cords. When you dispose of such products, please follow the guidance of your local authority or ask the shop where you purchased the product, or if applicable, follow applicable legislation or agreement you may have. The mark on electrical and electronic products may only apply to the current European Union Member States.uct, or if applicable, follow applicable legislation or agreement you may have. The mark on electrical and electronic products may only apply to the current European Union Member States.
Outside the European Union
If you wish to dispose of used electrical and electronic products outside the European Union, please contact your local authority and ask for the correct method of disposal.
For EU: The crossed-out wheeled bin implies that used batteries should not be put to the general household waste! There is a separate collection system for used batteries, to allow proper treatment and recycling in accordance with legislation.
According to EU directive 2006/66/EC and amendments, the battery can’t be disposed improperly. The battery shall be separated to collect by local service.

About Conversion Cables Used with the AV Terminal
Use a commercially-available video cable with a 4-contact mini jack (φ3.5 mm) at one extremity for conversion cables to connect to the AV terminal.
Check the wiring specification of the cable in advance and choose a proper cable.
NOTE: *Different wiring specifications may exist for 4-contact mini jack cables.

No.	Signal
1	Video
2	Audio (left)
3	Audio (right)
4	GND

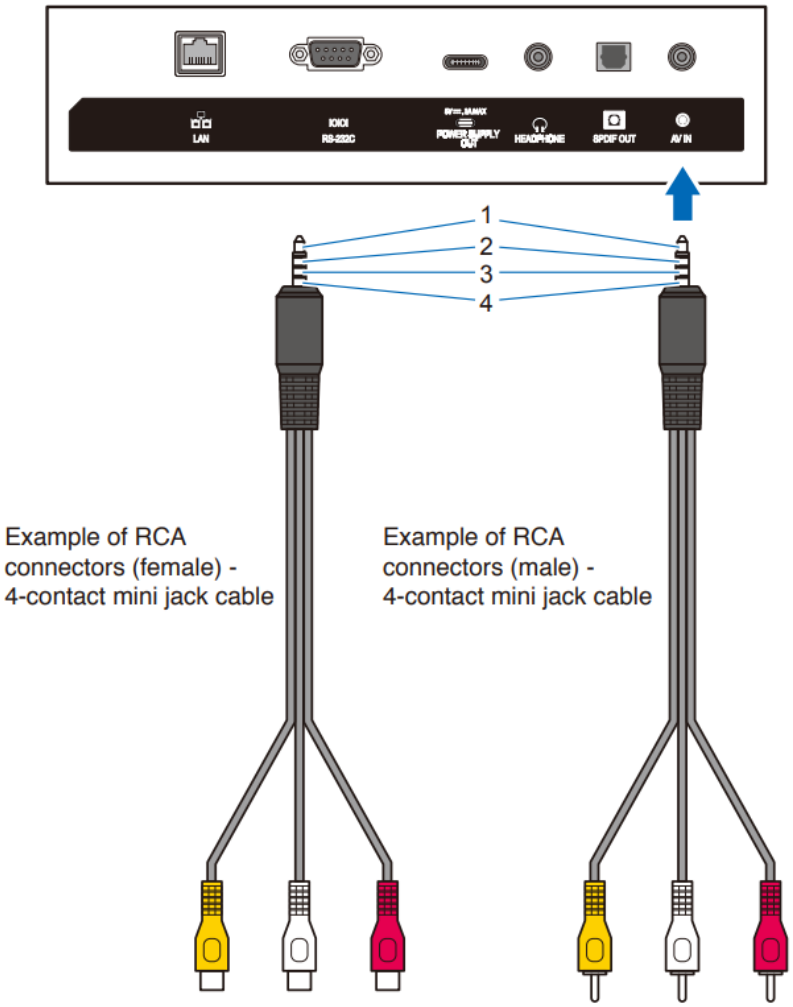

SHARP

Documents / Resources

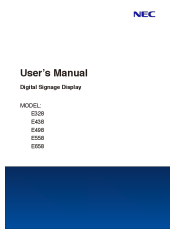

[SHARP E328 Digital Signage Display](#) [pdf] User Manual
E328 Digital Signage Display, E328, Digital Signage Display, Signage Display

References

- Control Systems for Home Automation, Campus & Building Control by Crestron Electronics [Crestron Electronics, Inc.]
- User Manual

Manuals+, Privacy Policy

This website is an independent publication and is neither affiliated with nor endorsed by any of the trademark owners. The "Bluetooth®" word mark and logos are registered trademarks owned by Bluetooth SIG, Inc. The "Wi-Fi®" word mark and logos are registered trademarks owned by the Wi-Fi Alliance. Any use of these marks on this website does not imply any affiliation with or endorsement.