Manuals+ — User Manuals Simplified.

SEAGATE Lyve Mobile Array User Manual

SEAGATE

Lyve Mobile Array
User Manual

Hier klicken, um eine aktuelle Online-Version dieses Dokuments aufzurufen. Auch finden Sie hier die aktuellsten Inhalte sowie erweiterbare Illustrationen, eine übersichtlichere Navigation sowie Suchfunktionen.

Contents

1 Welcome
2 Setup Requirements
3 Connecon Opons
4 Direct-A ached Storage (DAS) Connecons
5 Lyve Rackmount Receiver Connecons
6 Status LED
7 Lyve Mobile Shipper
8 Magnec Labels
9 Regulatory Compliance
10 Documents / Resources
10.1 References

Welcome

Seagate® Lyve™ Mobile Array is a portable, rackable data storage solution designed to quickly and securely store data at the edge or move data across your enterprise. Both the full-flash and hard drive versions enable universal data compatibility, versatile connectivity, secure encryption, and ruggedized data transportation.

Box content

Part	Description
	Lyve Mobile Array
	Power adapter
	US power cord
	EU power cord
	UK power cord
	AU/NZ power cord

	Thunderbolt™ 3 cable (up to 40Gb/s)
	SuperSpeed USB-C to USB-C cable (USB 3.1 Gen 2, up to 10Gb/s)
	SuperSpeed USB-C to USB-A cable (USB3.1 Gen 1, up to 5Gb/s and compa tible with USB 3.0 ports)
	Magnetic labels (x3)
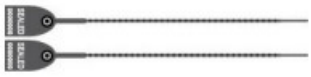	Security ties (x2)
	Shipping case
	Quick start guide

Minimum system requirements
Computer
Computer with one of the following:

- Thunderbolt 3 port
- USB-C port
- USB-A port (USB 3.0)

Lyve Mobile Array does not support HighSpeed USB (USB 2.0) cables or interfaces.
Operang system

- Windows® 10, version 1909 or Windows 10, version 20H2 (latest build)
- macOS® 10.15.x or macOS 11.x

Specificaons
Dimensions

Side	Dimensions (in/mm)
Length	16.417 in/417 mm
Width	8.267 in/210 mm
Depth	5.787 in/147 mm

Weight

Model	Weight (lb/kg)
SSD	21.164 lb/9.6 kg
HDD	27.7782 lb/12.6 kg

Electrical
Power adapter 260W (20V/13A)

! When charging the device using the power supply port, use only the power supply provided with your device. Power supplies from other Seagate and third-party devices can damage your Lyve Mobile Array.
Ports

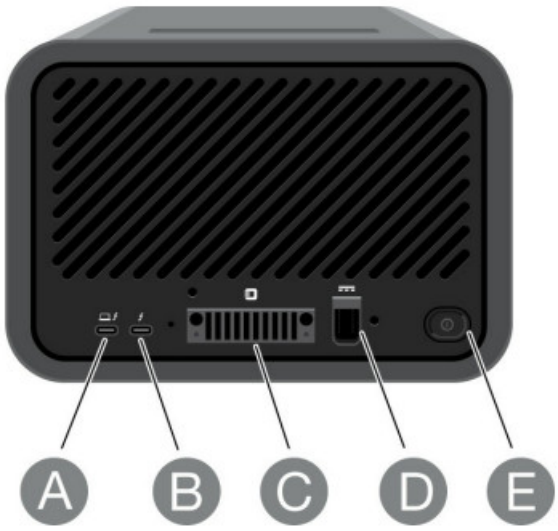

Direct aached storage (DAS) ports
Use the following ports when connecting Lyve Mobile Array to a computer:

A	**Thunderbolt™ 3 (host) port**—Connect to Windows and macOS computers.
B	**Thunderbolt™ 3 (peripheral) port** —Connect to peripheral devices.
D	**Power input**—Connect the power adapter (20V/13A).
E	**Power button**—See Direct-Attached Storage (DAS) Connections.

Seagate Lyve Rackmount Receiver ports
The following ports are used when Lyve Mobile Array is mounted in a Lyve Rackmount Receiver:

C	**Lyve USM™ Connector (High Performance PCIe gen 3.0)**—Transfer large amounts of data to your private or public cloud for efficient throughput up to 6GB/s on supported fabrics and networks.
D	**Power input**—Receive power when mounted in Rackmount Receiver.

Setup Requirements

Lyve Mobile security

Lyve Mobile offers two ways for project admins to manage how end users securely access Lyve Mobile storage devices:

Lyve Portal Identity—End users authorize client computers to access Lyve Mobile devices using their Lyve Management Portal credentials. Requires an internet connection for initial setup and periodic reauthorization through Lyve Management Portal.

Lyve Token Security—End users are provided with Lyve Token files that can be installed on certified client computers and Lyve Mobile Padlock devices. Once configured, computers/Padlock devices unlocking Lyve Mobile devices do not require continual access to Lyve Management Portal or the internet.

For details on setting up security, go to **www.seagate.com/lyve-security**.

Download Lyve Client

To unlock and access Lyve devices connected to your computer, you must enter your username and password in the Lyve Client app. You can also use it to manage Lyve projects and data operations. Install Lyve Client on any computer intended to connect to Lyve Mobile Array. Download the Lyve Client installer for Windows or macOS at **www.seagate.com/support/lyve-client**

Authorize host computers

An internet connection is required when authorizing a host computer.

1. Open Lyve Client on a computer intended to host Lyve Mobile Array.
2. When prompted, enter your Lyve Management Portal username and password.

Lyve Client authorizes the host computer to unlock and access Lyve devices and manage projects on the Lyve Management Portal.

The host computer remains authorized for up to 30 days, during which you can unlock and access connected devices even without an internet connection. After 30 days, you'll need to open Lyve Client on the computer and re-enter your credentials.

Lyve Mobile Array locks when powered off, ejected or unplugged from the host computer, or if the host computer goes to sleep. Use Lyve Client to unlock Lyve Mobile Array when it is reconnected to the host or the host has awakened from sleep. Note that Lyve Client must be open and the user must be signed in to use Lyve Mobile Array.

Connecon Opons

	Lyve Mobile Array can be used as direct-attached storage. **See Direct-Attached Storage (DAS) Connections**.
	Lyve Mobile Array can also support connections via Fibre Channel, iSCSI and Serial Attached SCSI (SAS) connections using the Lyve Rackmount Receiver. For details, see the **Lyve Rackmount Receiver user manual**.
	For high-speed mobile data transfers, connect Lyve Mobile Array using the Lyve Mobile PCIe Adapter. See the **Lyve Mobile Mount and PCIe Adapter user manual or Lyve Mobile Mount and PCIe Adapter Front Loader user manual**.

Direct-A ached Storage (DAS) Connecons

Connect power

Connect the included power supply in the following order:

A. Connect the power supply to Lyve Mobile Array's power input.

B. Connect the power cord to the power supply.

C. Connect the power cord to a live power outlet.

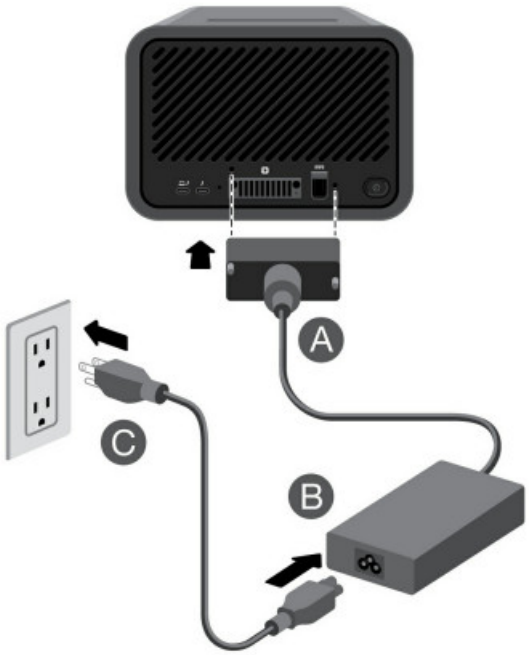

! Use only the power supply provided with your device. Power supplies from other Seagate and third-party devices can damage Lyve Mobile Array.

Connect to host computer

Lyve Mobile Array is shipped with three types of cables to connect to host computers. Review the following table for cable and host port options.

Cables	Host port
Thunderbolt 3	Thunderbolt 3, Thunderbolt 4
USB-C to USBC	USB 3.1 Gen 1 or higher
USB-C to USBA	USB 3.0 or higher

Connect Lyve Mobile Array to a computer in the following order:

A. Connect the Thunderbolt 3 cable to Lyve Mobile Array's Thunderbolt 3 host port located on the left side of the back panel.

B. Connect the other end to an appropriate port on the host computer.

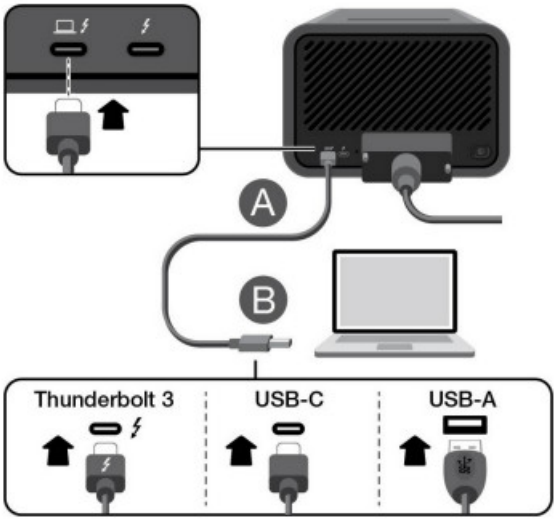

Windows Prompt: Approve Thunderbolt Device

When you first connect Lyve Mobile Array to a Windows PC that supports Thunderbolt 3, you may see a prompt requesting to authenticate the recently connected device. Follow the onscreen prompts to approve the Thunderbolt connection to Lyve Mobile Array. For more details on Thunderbolt connectivity to your Windows PC, see the following **knowledge base article**.

! If you are using a USB host and the Lyve Mobile Array status LED is illuminated with an amber chase pattern, make sure the cable is connected to Lyve Mobile Array's Thunderbolt 3/USB-C host port. The host port is the USB-C port with the computer icon. An amber chase pattern indicates that the computer is connected to the peripheral port.

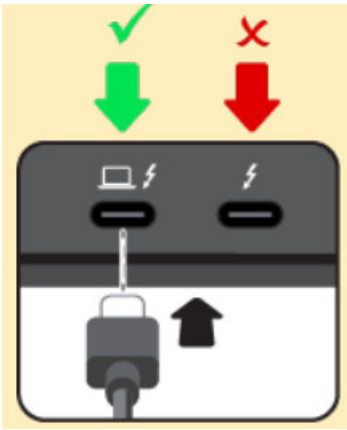

Unlock the device

The LED on the device blinks white during the boot process and turns solid orange. The solid orange LED color indicates the device is ready to be unlocked.

Once the device has been unlocked by a valid Lyve Portal Identity or Lyve Token file, the LED on the device turns solid green. The device is unlocked and ready for use.

Power buon

Power on—A direct connection to a computer is not required to power on Lyve Mobile Array. It automatically powers on when connected to a power outlet.

Power off—Before powering off Lyve Mobile Array, make certain to safely eject its volumes from the host computer. Apply a long press (3 seconds) to the power button to turn off Lyve Mobile Array.

If Lyve Mobile Array is off but still connected to power, you can turn Lyve Mobile Array back on by applying a short press (1 second) to the power button.

Cycle power when switching connecon types

Switching from one DAS connection type (Thunderbolt, USB, or PCIe Adapter) to another can result in missing volumes. Windows users can also experience a blue screen error.

To avoid these issues, use the following procedure when changing connection types:

1. Safely eject the volume.
2. Power off Lyve Mobile Array.
3. Change the connection as needed.
4. Power on Lyve Mobile Array.

Lyve Rackmount Receiver Connecons

For details on configuring Seagate Lyve Rackmount Receiver for use with Lyve Mobile Array and other compatible devices, see the **Lyve Rackmount Receiver user manual**.

Connect Ethernet port

Lyve Client communicates with devices inserted in Lyve Rackmount Receiver via the Ethernet management ports. Ensure that the Ethernet management ports are connected to the same network as the host devices running Lyve Client. If no device is inserted in a slot, there's no need to connect its corresponding Ethernet management port to

the network.

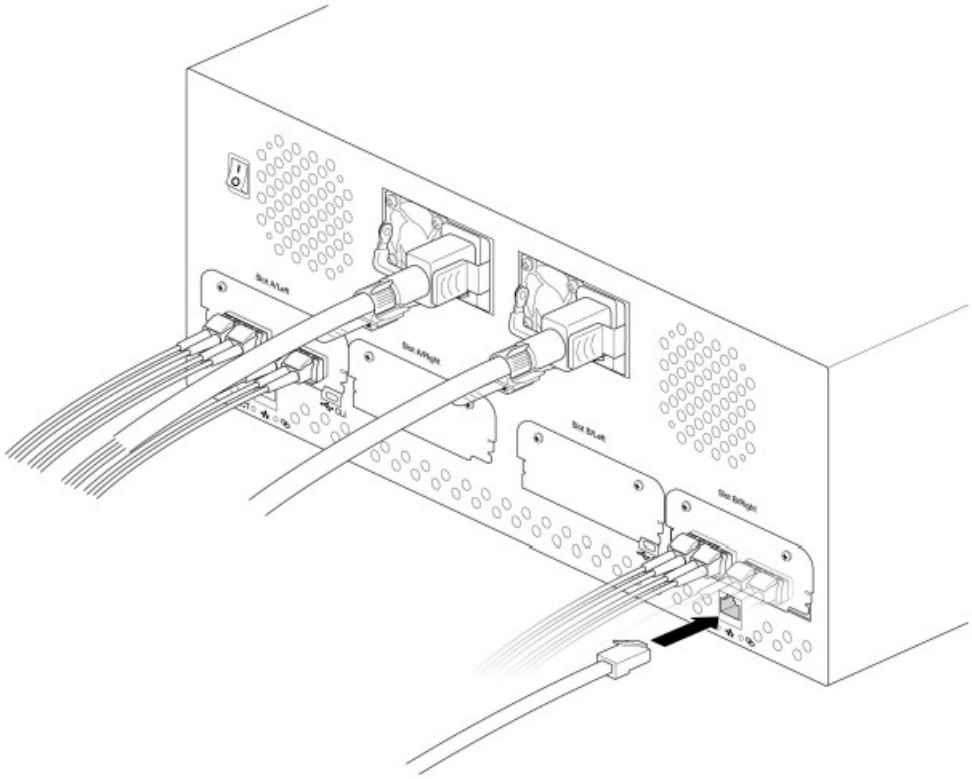

Connect Lyve Mobile Array
Insert Lyve Mobile Array into slot A or B on Rackmount Receiver.

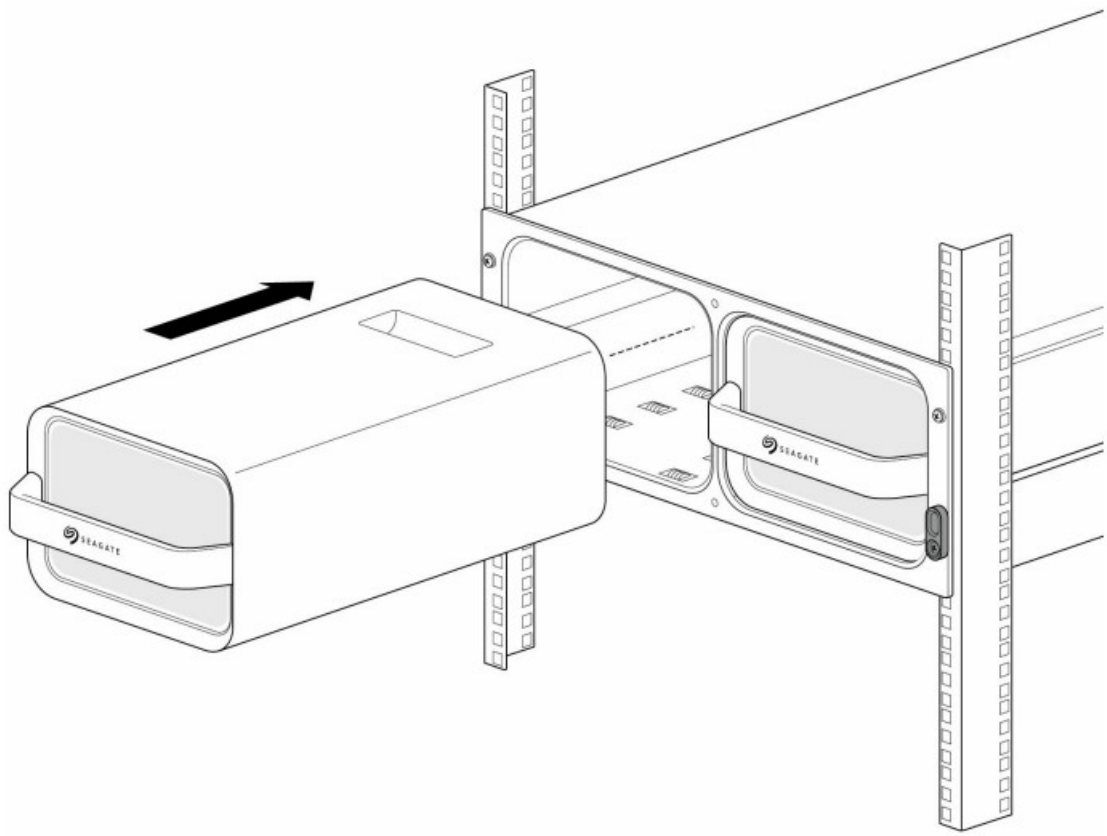

Slide device in until it’s fully inserted and firmly connected to Rackmount Receiver’s data and power.
Close latches.

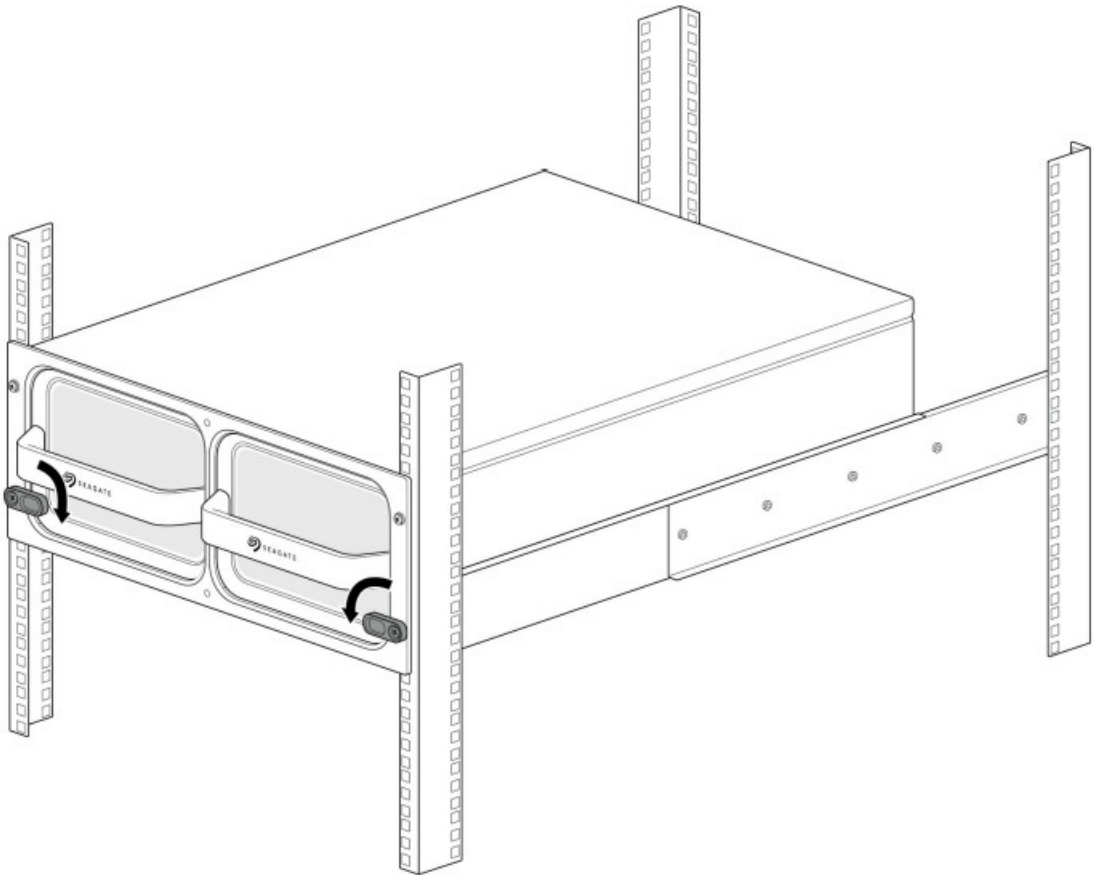

Turn on power

Set the power switch on Lyve Mobile Rackmount Receiver to ON.

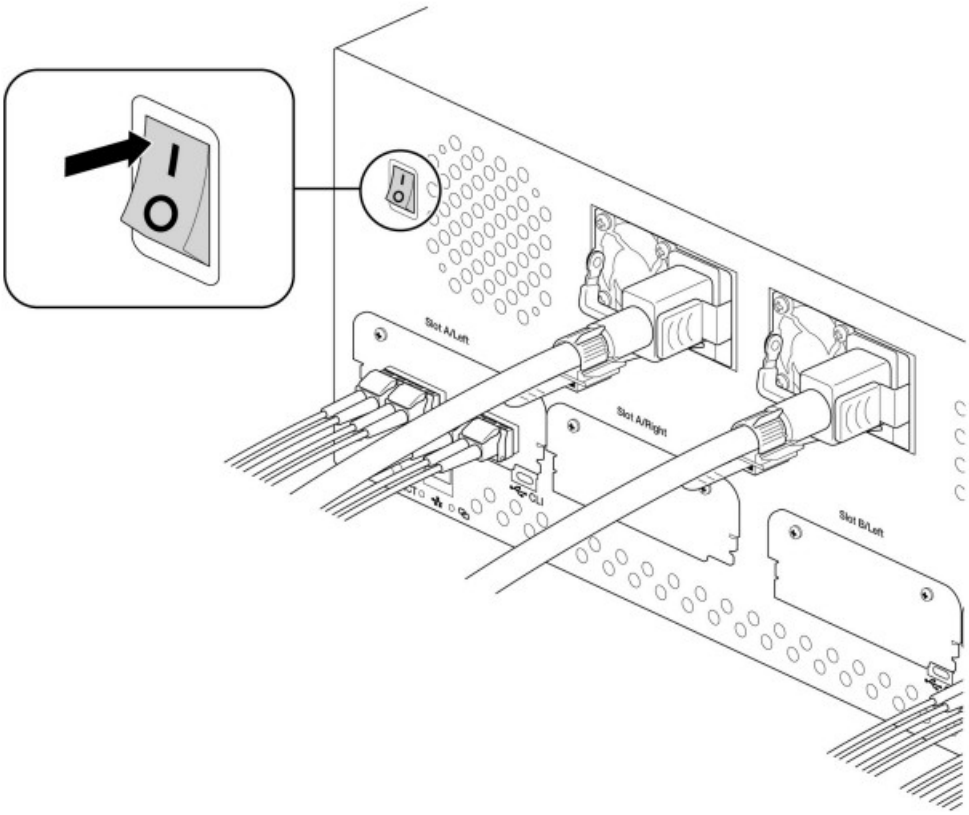

Unlock the device

The LED on the device blinks white during the boot process and turns solid orange. The solid orange LED color indicates the device is ready to be unlocked.

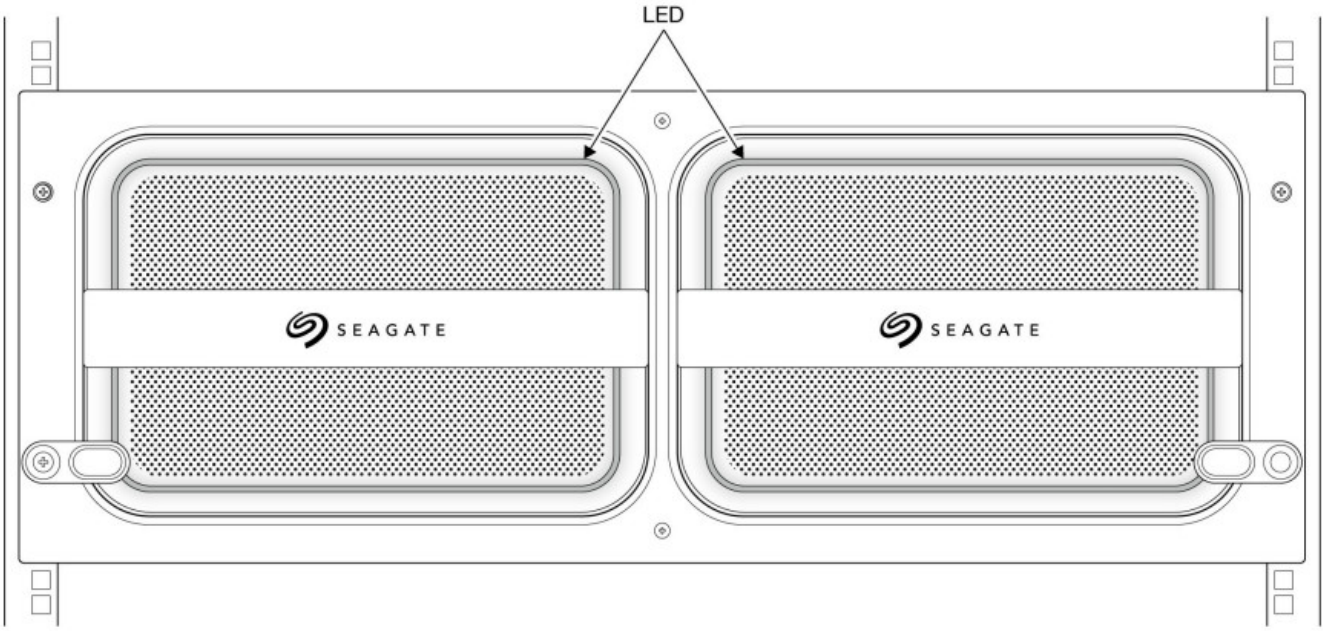

Once the device has been unlocked by a valid Lyve Portal Identity or Lyve Token file, the LED on the device turns solid green. The device is unlocked and ready for use.

Status LED

The LED on the front of the enclosure indicates the device's status. See the key below for the color and animations associated with each status.

Key

Status	Color 1	Color 2	Animation	Description
Off		N/A	Steady	Device is powered off.
Identification			Breathe	A Lyve Client user has sent a prompt to identify t he device.
Error		N/A	Steady	Error reported.
Warning			Blink	Warning reported.
Manual power off			Fade out	A user initiated a manual power off.
Drive locked		N/A	Circular	Drive is locked.
Configuration		N/A	Steady	Lyve Client is configuring the device.
Ingest		N/A	Circular	Lyve Client is copying/moving data.
I/O			Breathe	Input/output activity.
Ready		N/A	Steady	Device is ready.
Booting	White		Blink	Device is starting up.

Lyve Mobile Shipper

A shipping case is included with Lyve Mobile Array.

! Always use the case when transporting and shipping Lyve Mobile Array.
For additional security, fasten the included beaded security tie to Lyve Mobile Shipper. The recipient knows the case was not tampered with in transit if the tie remains intact.

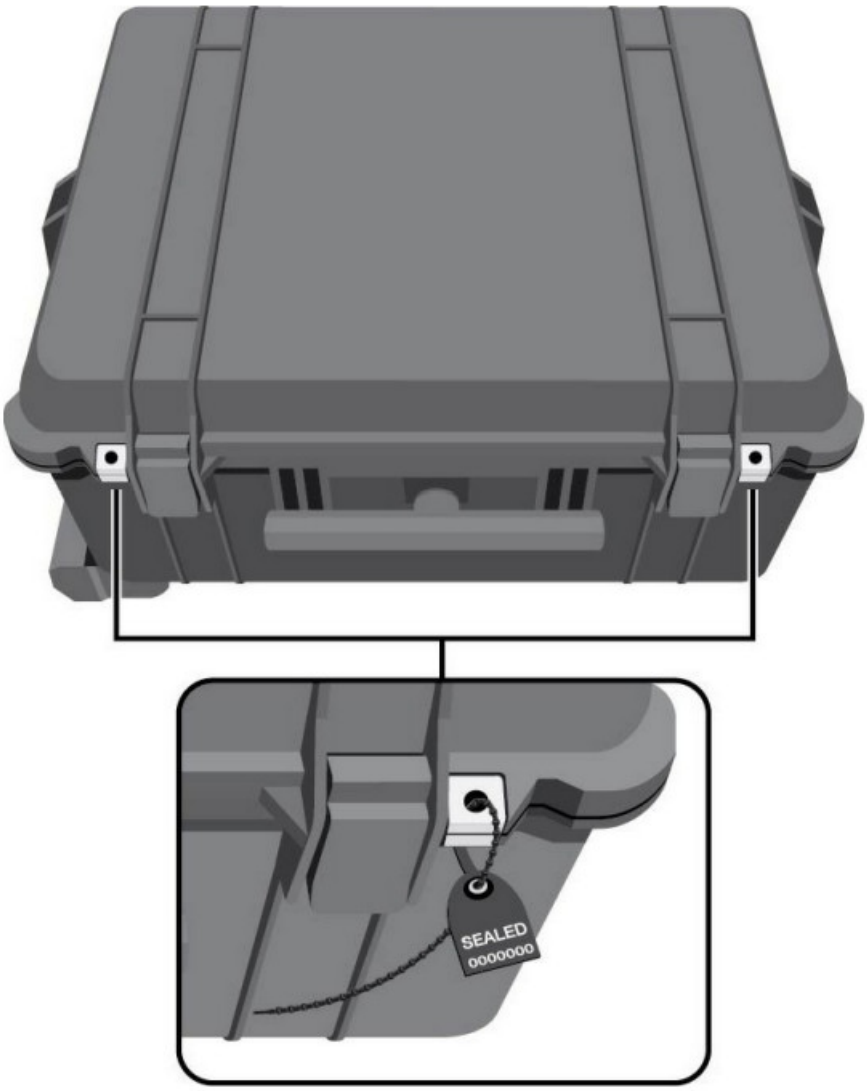

Magnec Labels

Magnetic labels can be placed on the front of Lyve Mobile Array to help identify individual devices. Use a marker or grease pencil to customize the labels.

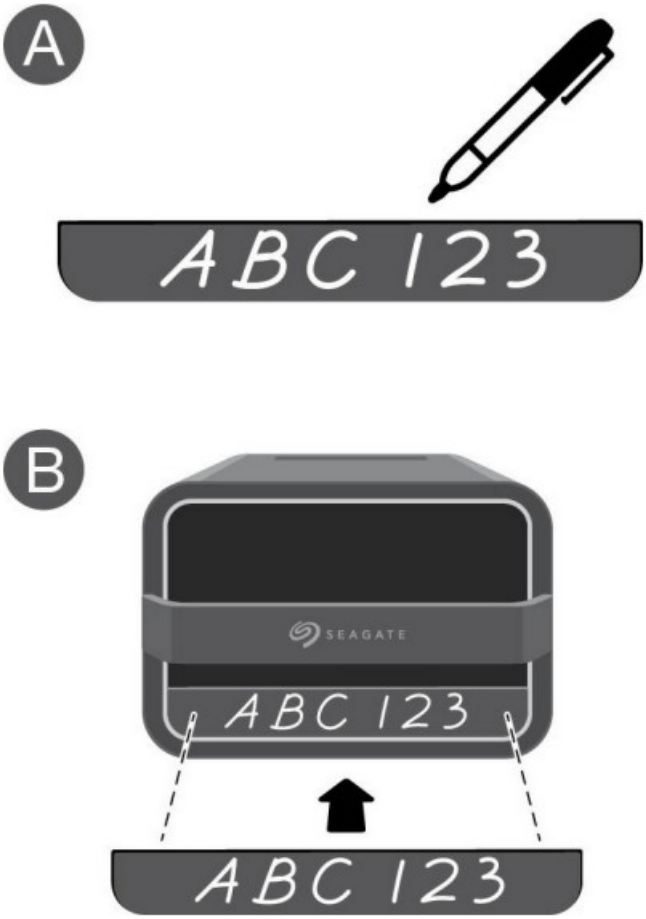

Regulatory Compliance

Product Name	Regulatory Model Number
Seagate Lyve Mobile Array	SMMA001

FCC DECLARATION OF CONFORMANCE
This device complies with Part 15 of the FCC Rules. Operation is subject to the following two conditions:

1. this device may not cause harmful interference, and
2. this device must accept any interference received, including interference that may cause undesired operation.

CLASS B

This equipment has been tested and found to comply with the limits for a Class B digital device, pursuant to Part 15 of the FCC Rules. These limits are designed to provide reasonable protection against harmful interference in residential installation. This equipment generates, uses, and can radiate radio frequency energy and, if not installed and used in accordance with the instructions, may cause harmful interference to radio communications. However, there is no guarantee that interference will not occur in a particular installation. If this equipment does cause harmful interference to radio or television reception, which can be determined by turning the equipment off and on, the user is encouraged to try to correct the interference by one or more of the following measures:

1. Reorient or relocate the receiving antenna.
2. Increase the separation between the equipment and receiver.
3. Connect the equipment into an outlet on a circuit different from that to which the receiver is connected.

4. Consult the dealer or an experienced radio/TV technician for help.

CAUTION: Any changes or modifications made to this equipment may void the user's authority to operate this equipment.

China RoHS 2 refers to the Ministry of Industry and Information Technology Order No. 32, effective July 1, 2016, titled Management Methods for the Restriction of the Use of Hazardous Substances in Electrical and Electronic Products. To comply with China RoHS 2, we determined this product's Environmental Protection Use Period (EPUP) to be 20 years in accordance with the Marking for the Restricted Use of Hazardous Substances in Electronic and Electrical Products, SJT 11364-2014.

Part Name			**Hazardous Substances**			
	(Pb)	**(Hg)**	**(Cd)**	**(CO)**	**(PBB)**	**(PBDE)**
HDD/SSD	X	0	0	0	0	0
Bridge PCBA	X	0	0	0	0	0
Power Supply (if provided)	X	0	0	0	0	0
Interface cable (if provided)	X	0	0	0	0	0
Other enclosure components	0	0	0	0	0	0
This table is prepared in accordance with the provisions of SJ/T 11364-2014 0: Indicates that the hazardous substance contained in all of the homogeneous materials for this part is below t he limit requirement of GB/126572. X: Indicates that the hazardous substance contained in at least one of the homogeneous materials used for this part is above the limit requirement of GB/T26572.						

Taiwan RoHS

Taiwan RoHS refers to the Taiwan Bureau of Standards, Metrology and Inspection's (BSMI's) requirements in standard CNS 15663, Guidance to reduction of the restricted chemical substances in electrical and electronic equipment. Beginning on January 1, 2018, Seagate products must comply with the "Marking of presence" requirements in Section 5 of CNS 15663. This product is Taiwan RoHS compliant. The following table meets the Section 5 "Marking of presence" requirements.

Unit			**Hazardous Substances**			
	(Pb)	**(Hg)**	**(Cd)**	**(CO)**	**(PBB)**	**(PBDE)**
HDD/SSD	–	0	0	0	0	0
Bridge PCBA	–	0	0	0	0	0
Power Supply (if provided)	–	0	0	0	0	0
Interface cable (if provided)	–	0	0	0	0	0
Other enclosure components	0	0	0	0	0	0
Note 1.0″ indicates that the percentage content of the restricted substance does not exceed the percentage of r eference value of presence. Note 2."—" indicates that the restricted substance corresponds to the exemption.						

Regulatory Compliance

Documents / Resources

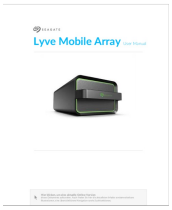	SEAGATE Lyve Mobile Array [pdf] User Manual Lyve Mobile Array, Lyve, Mobile Array, Array

References

- Lyve Mobile Security | Seagate US
- Lyve Mobile Software | Support Seagate US
- Ultra Touch | Seagate Australia / New Zealand
- Lyve Mobile Security | Seagate US
- Lyve Mobile Rackmount Receiver | Seagate US
- Lyve Mobile Mount and PCIe Adapter - Front Loader | Seagate US
- Lyve Mobile Mount and PCIe Adapter | Seagate US
- Lyve Mobile Software | Support Seagate US
- IMPORTANT: Using Thunderbolt 3 on Windows | Support Seagate US
- User Manual

Manuals+, Privacy Policy