PLT SOLUTIONS Wattage and Color Selectable LED Vapor Tight Instruction Manual

Contents [hide

1 PLT SOLUTIONS Wattage and Color Selectable LED Vapor Tight
2 Installation Instruction
3 General Wiring Diagram
4 INSTRUCTIONS
5 Field-Adjustable Wattage & CCT
6 Documents / Resources
7 Related Posts

PLT SOLUTIONS Wattage and Color Selectable LED Vapor Tight

Installation Instruction

WARNING

- To reduce the risk of death, personal injury or property damage from fire, electric shock, falling parts, cuts/abrasions, and other hazards read all warnings and instructions included with and on the fixture box and all fixture labels. Before installing, servicing, or performing routine maintenance upon this equipment, follow these general precautions.
- A qualified licensed electrician should perform commercial installation, service and maintenance of luminaires. For the installation: If you are unsure about the installation or maintenance of the luminaires, consult a qualified licensed electrician and check your local electrical code.
- To prevent wiring damage or abrasion, do not expose wiring to edges of sheet metal or other sharp objects.
- Do not make or alter any open holes in an enclosure of wiring or electrical components during kit installation.

WARNING

- Turn off electrical power at fuse or circuit breaker box before wiring fixture to the power supply.
- Turn off the power when you perform any maintenance.
- Verify that supply voltage is correct by comparing it with the luminaire label information.
- All wiring connections should be capped with UL-approved wire connectors.

CAUTION

- Avoid direct eye exposure to the light source while it is on.
- Account for small parts and destroy packing material, as these may be hazardous to children
- Risk of burn. Disconnect power and allow fixture to cool before handing fixture.

1. **NOTICE**: Green ground screw provided in proper location.Do not relocate.
2. **NOTICE**: Minimum 90° supply conductors.
3. **NOTICE**: Specifications and dimensions subject to change without notice.
4. **NOTICE**: Suitable for wet location.

General Wiring Diagram

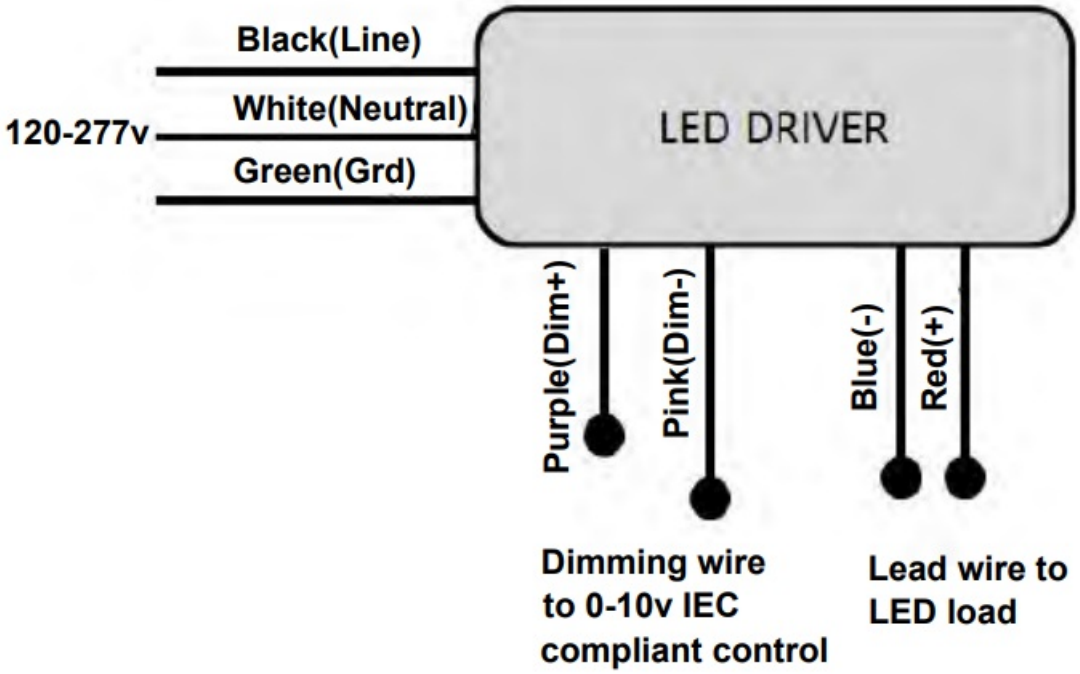

INSTRUCTIONS

Always turn off the power supply from main circuit breaker first!

Surface Mounting

1. Locate drill holes for mounting brackets. Use hardware found in the hardware kit. Mount the bracket to the surface.

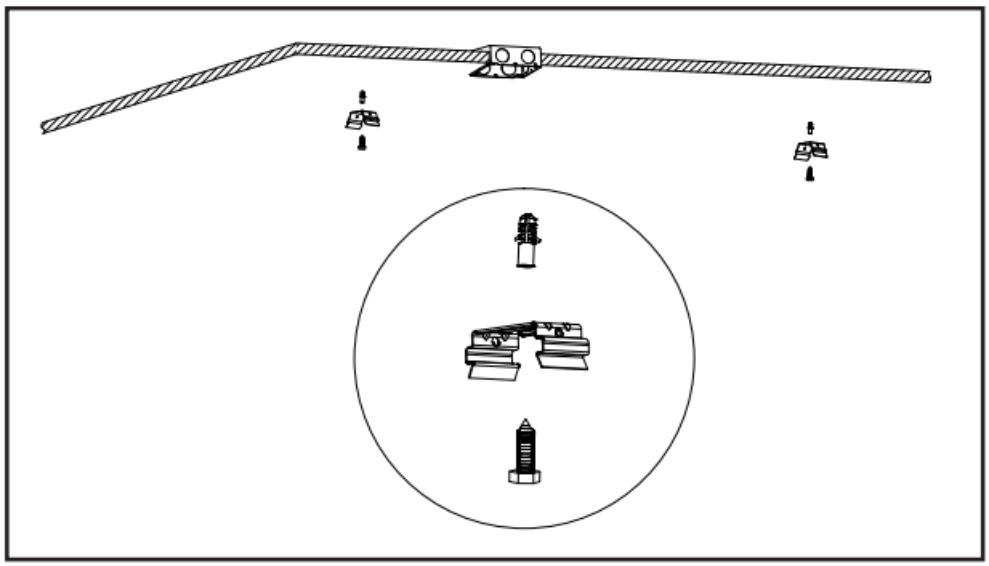

2. Secure mounting clips to housing recesses by firmly pressing them into place until both sides of the clip are

secured.

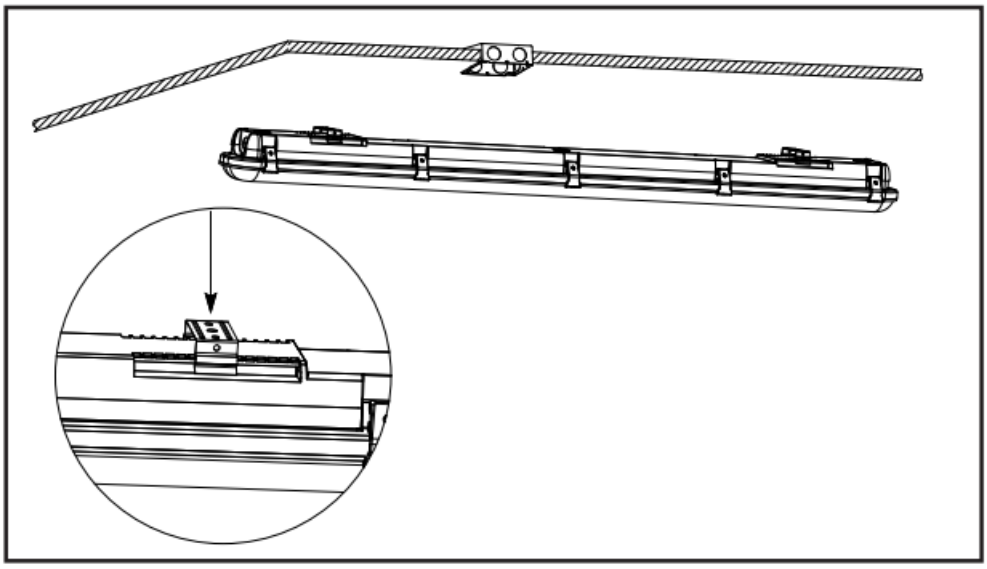

3. Release latches by pulling top of the latch away from the housing. Set the lens aside.

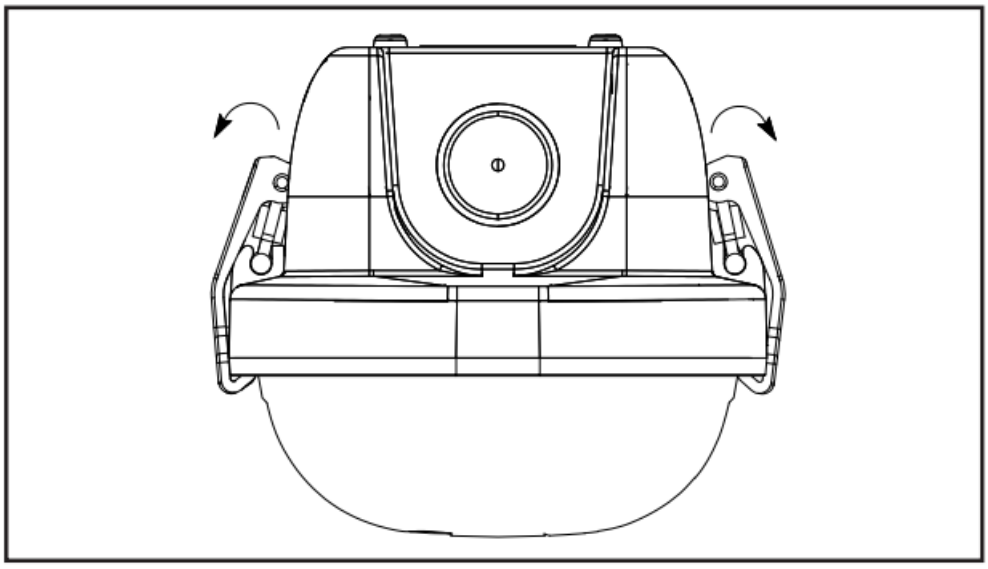

4. Without touching the LED boards, detach the LED tray from the fixture. Safety cables will suspend the tray.

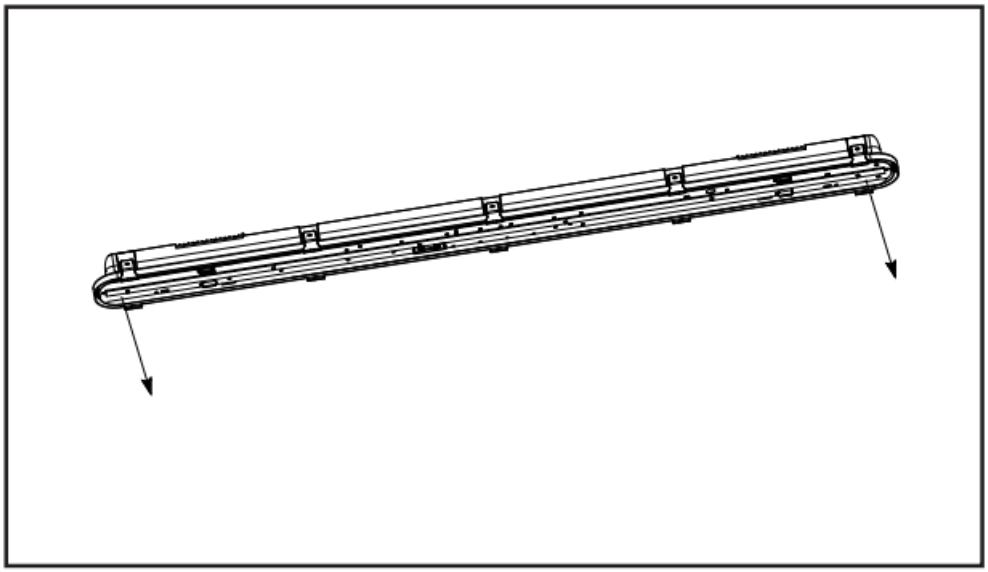

5. Assemble the PG13.5 waterproof cable connector and position it in the appropriate end of the fixture housing Bring an (owner-supplied) 6-10 millimeter diameter electrical cable through the PG13.5 waterproof cable connection.

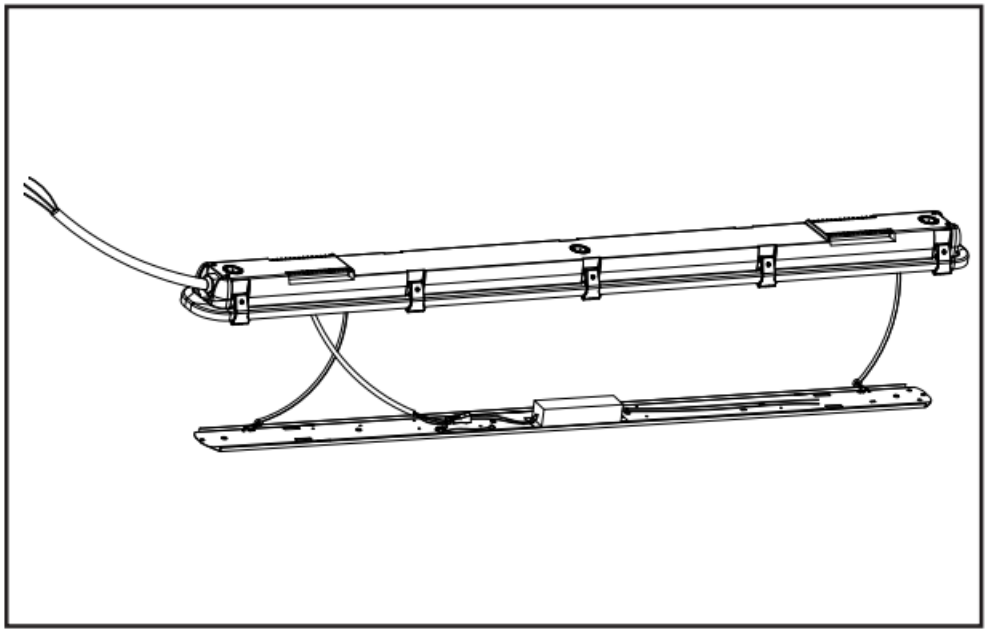

Include 0-10V dimming conductors in the cable if 0-10V dimming is desired. Make appropriate electrical connections with the driver.

6. Follow general wiring Diagram on Figure for reference Make sure the power supply is disconnected before installing.

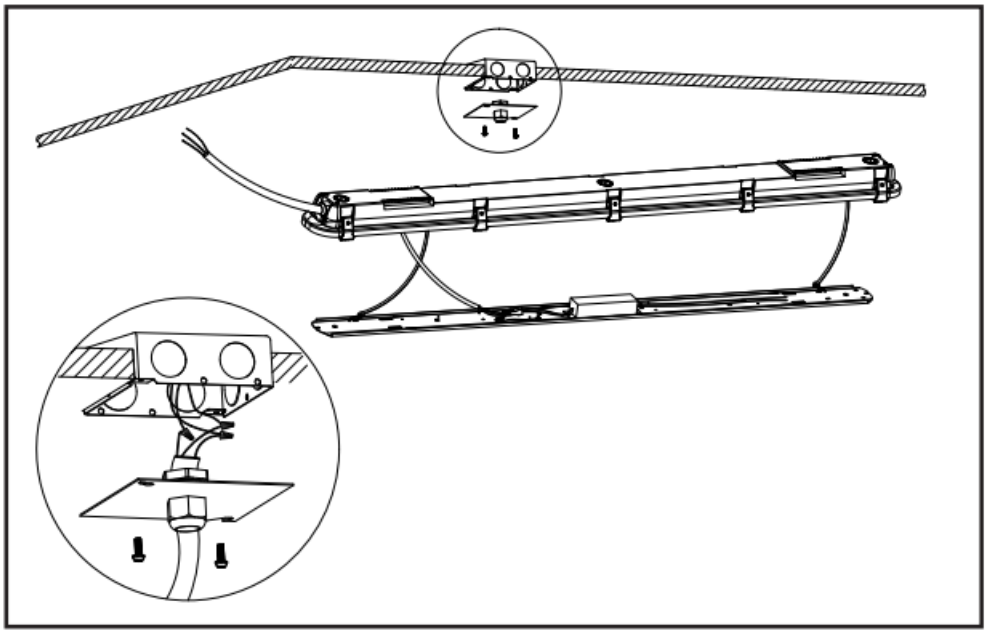

7. Reattach LED tray to fixture by reversing step 4.

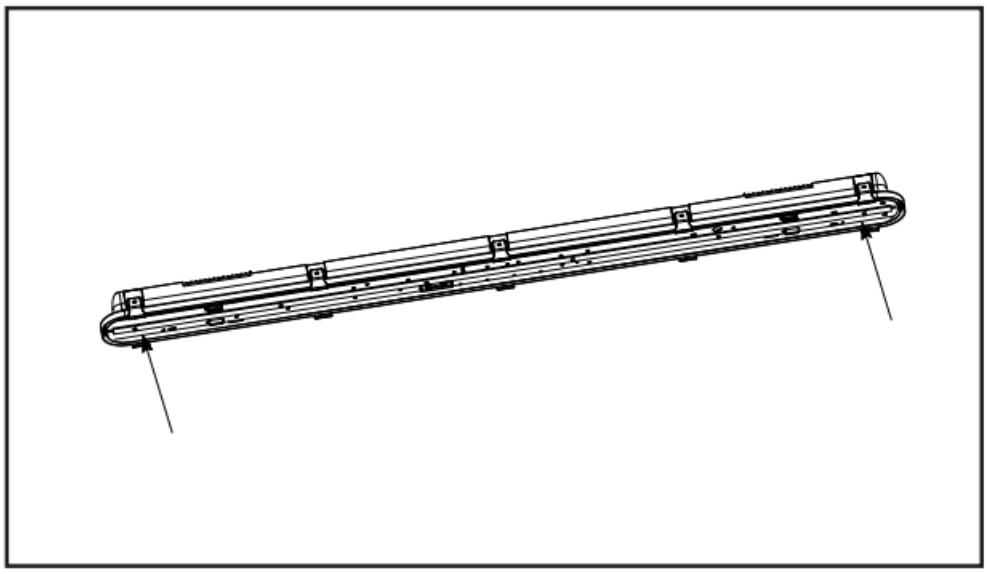

8. Secure lens to housing with lens latches.

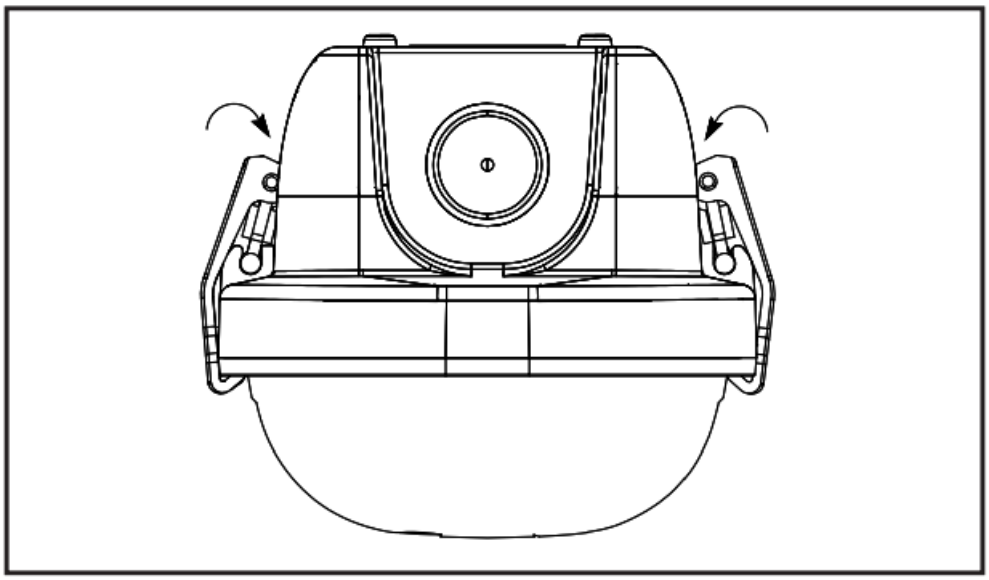

Note:

- Connect the (owner-supplied) 6-10 millimeter diameter flexible electrical cable (SJTW 18AWG) to the outlet box , and cover the outlet box with the UL listed canopy. Be sure to provide a strain relief means at the canopy side.
- Ensure that the gap is sealed by glue.
- Be sure to provide with a wet location-rated strain relief means.

Chain Suspended Mounting

1. Attach the V-bracket to each mounting clip by spreading the ends of the V-bracket apart and then inserting the legs into the holes in the side of the mounting clips.

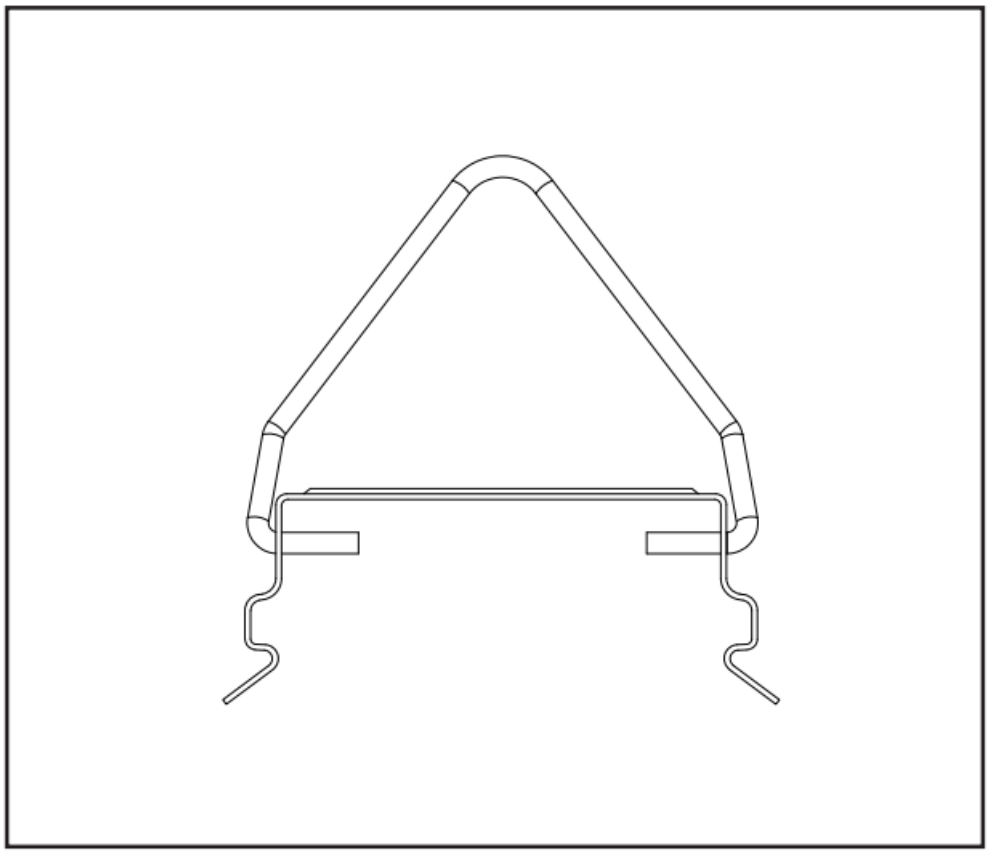

2. Secure mounting clips to housing recesses by firmly pressing them into place until both sides of the clip are secured.

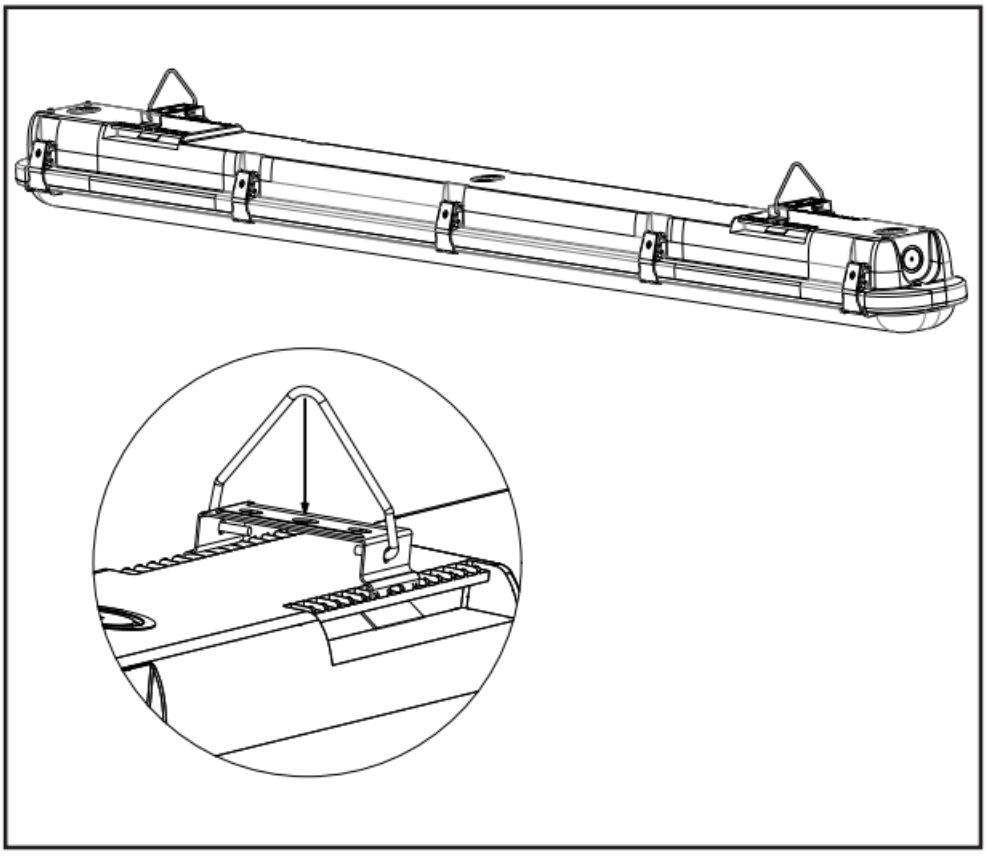

3. Hang fixture from the customer-supplied chain using V-brackets.

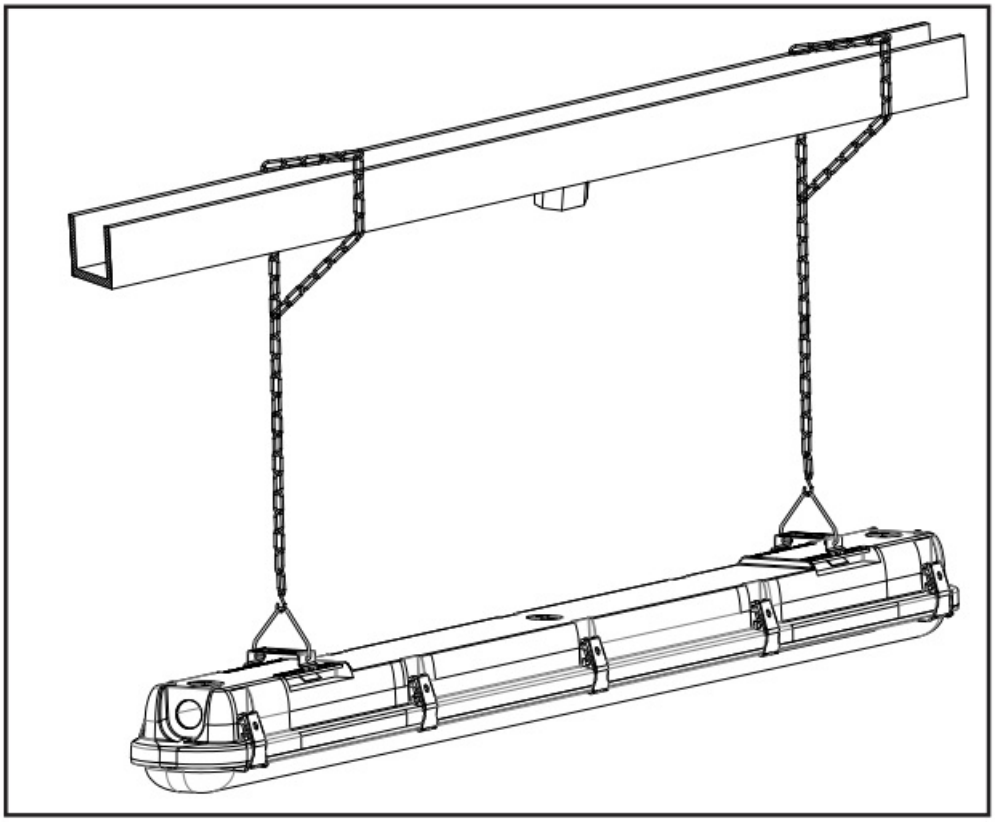

4. Release latches by pulling top of the latch away from the housing. Set the lens aside.

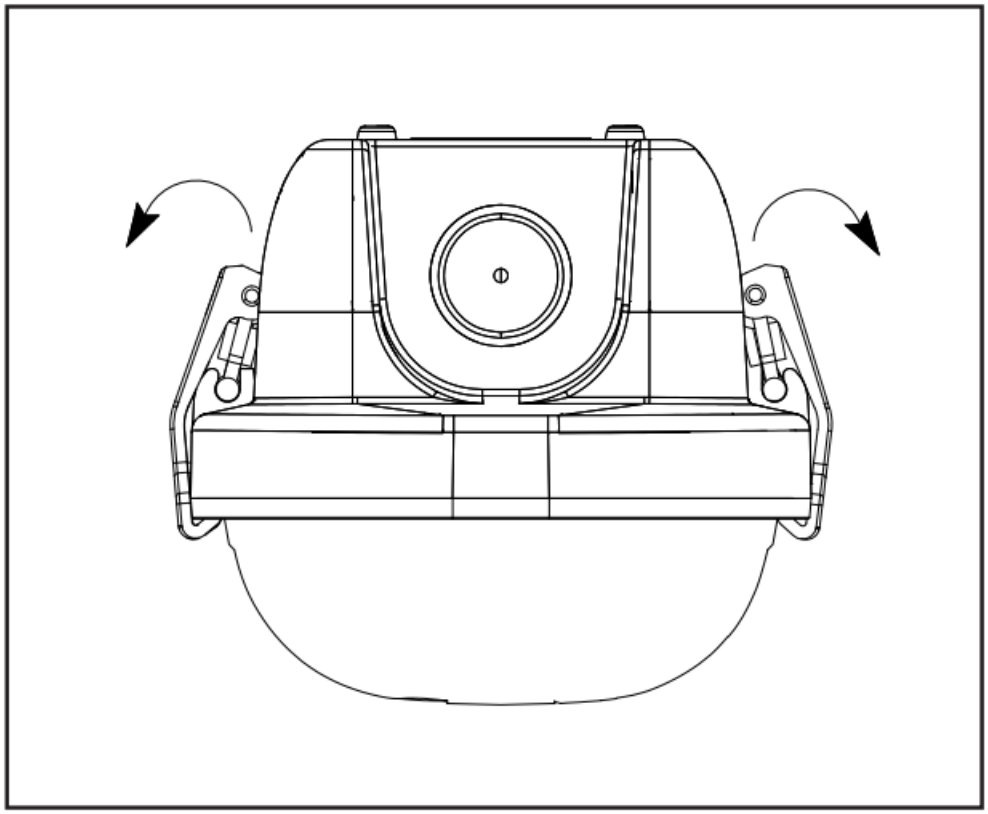

5. Without touching LED boards, detach LED tray from the fixture. Safety cables will suspend the tray.

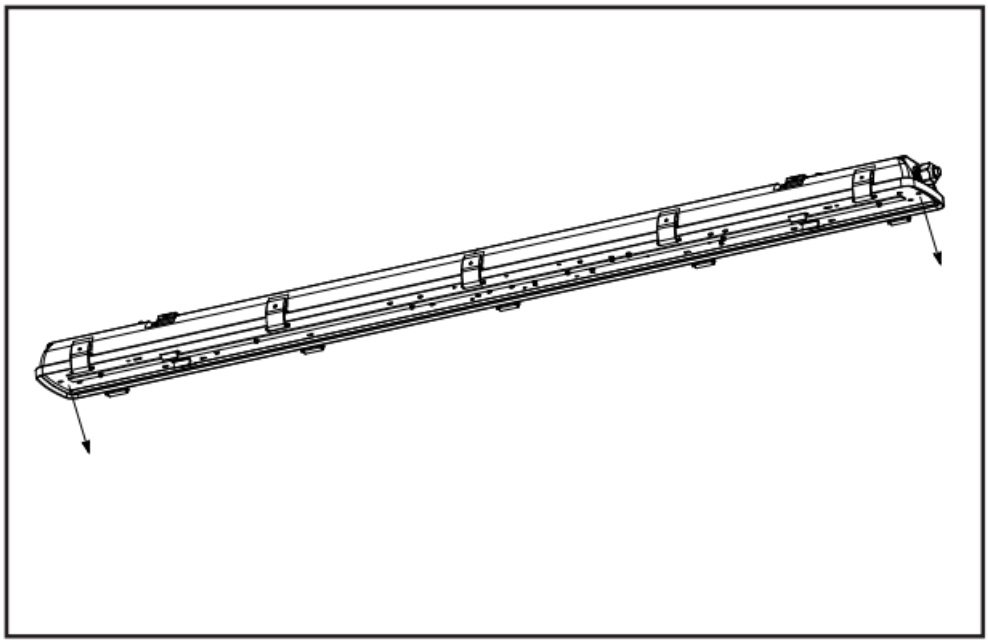

6. Assemble the PG13.5 waterproof cable connector and position it in the appropriate end of the fixture housing. Bring an (owner-supplied) 6-10 millimeter diameter electrical cable through the PG13.5 waterproof cable connection. Include 0-10V dimming conductors in the cable if 0-10V dimming is desired. Make appropriate electrical connections with the driver.

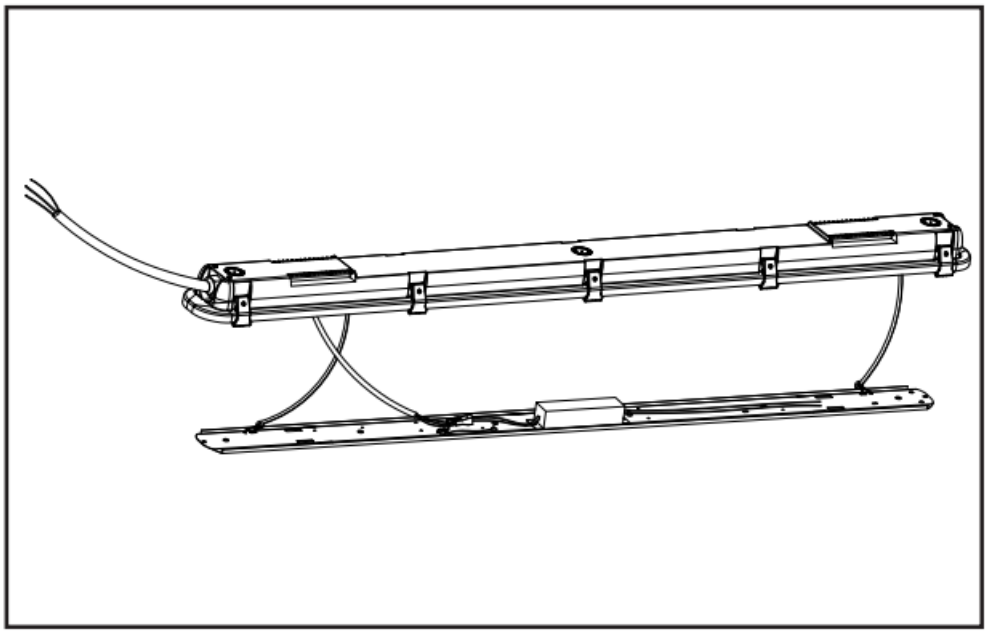

7. Follow general wiring Diagram on the Figure for reference. Make sure the power supply is disconnected before installing.

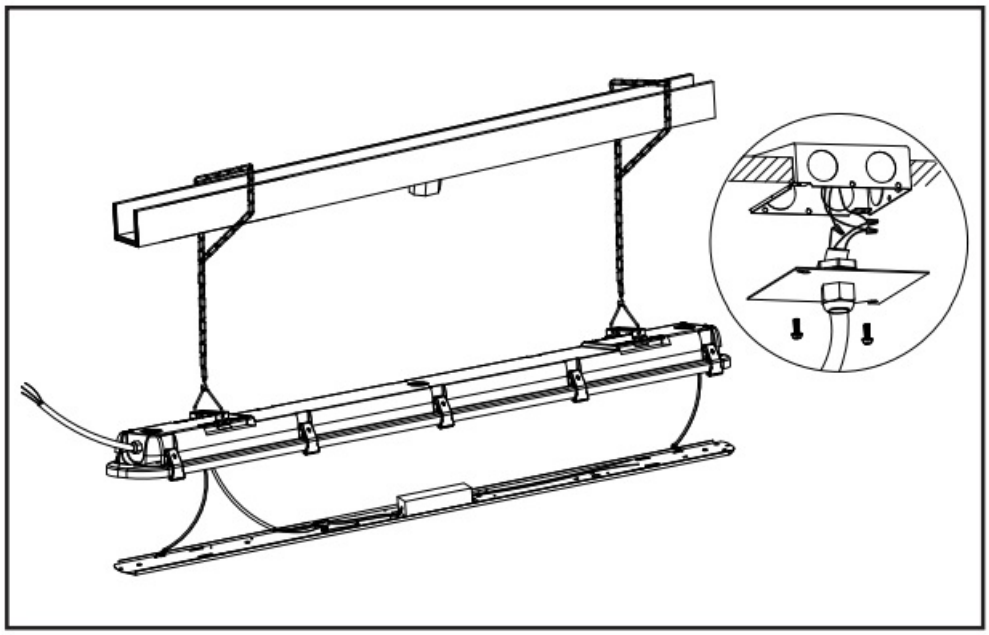

8. Reattach LED tray to fixture by reversing step 5.

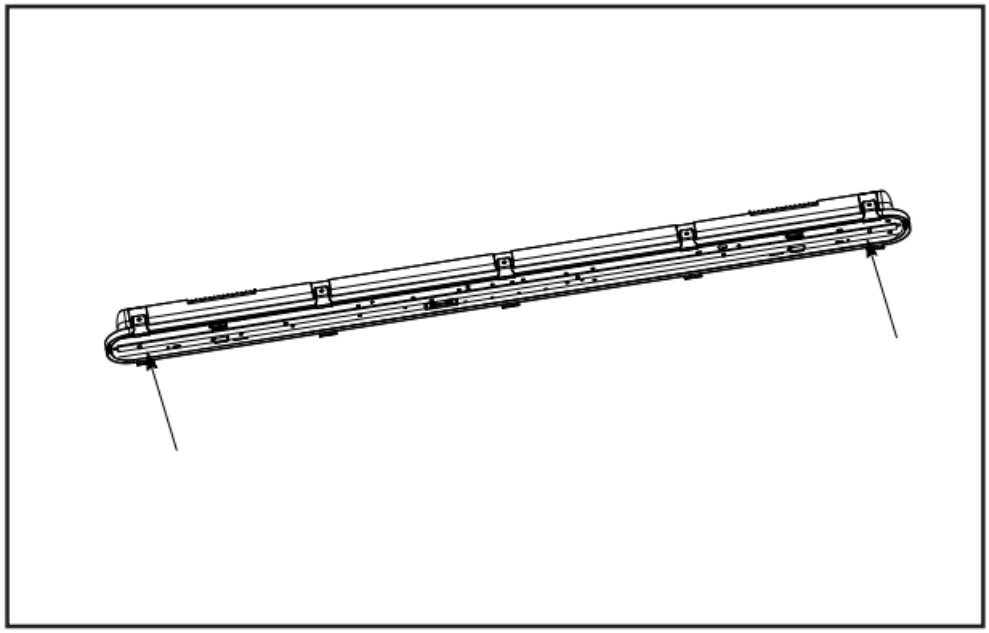

9. Secure lens to the housing with lens latches.

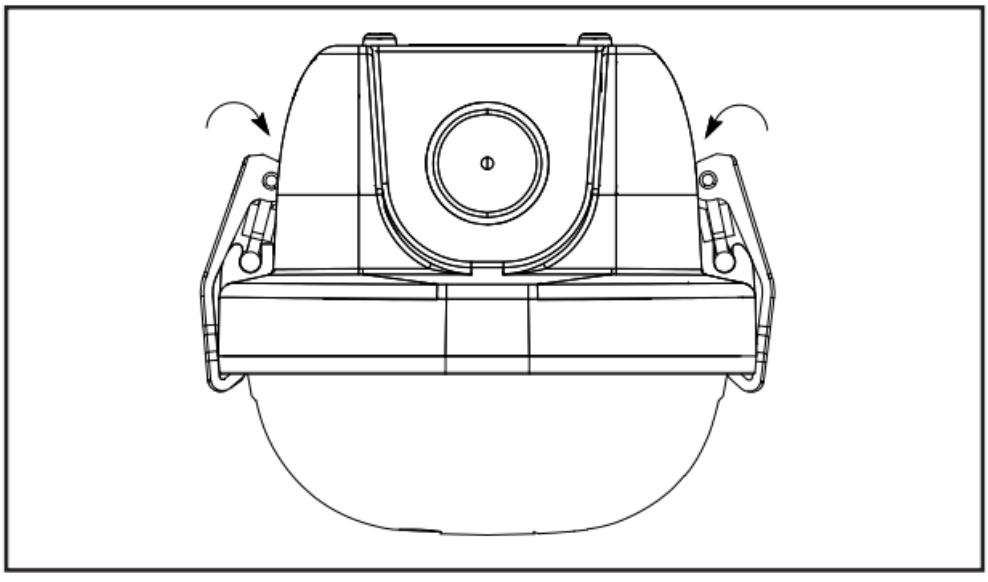

Note:

- Connect the (owner-supplied) 6-10 millimeter diameter flexible electrical cable (SJTW 18AWG) to the outlet box, and cover the outlet box with the UL listed canopy. Be sure to provide a strain relief means at the canopy side.
- Ensure that the gap is sealed by glue.
- Be sure to provide with a wet location-rated strain relief means.

Field-Adjustable Wattage & CCT

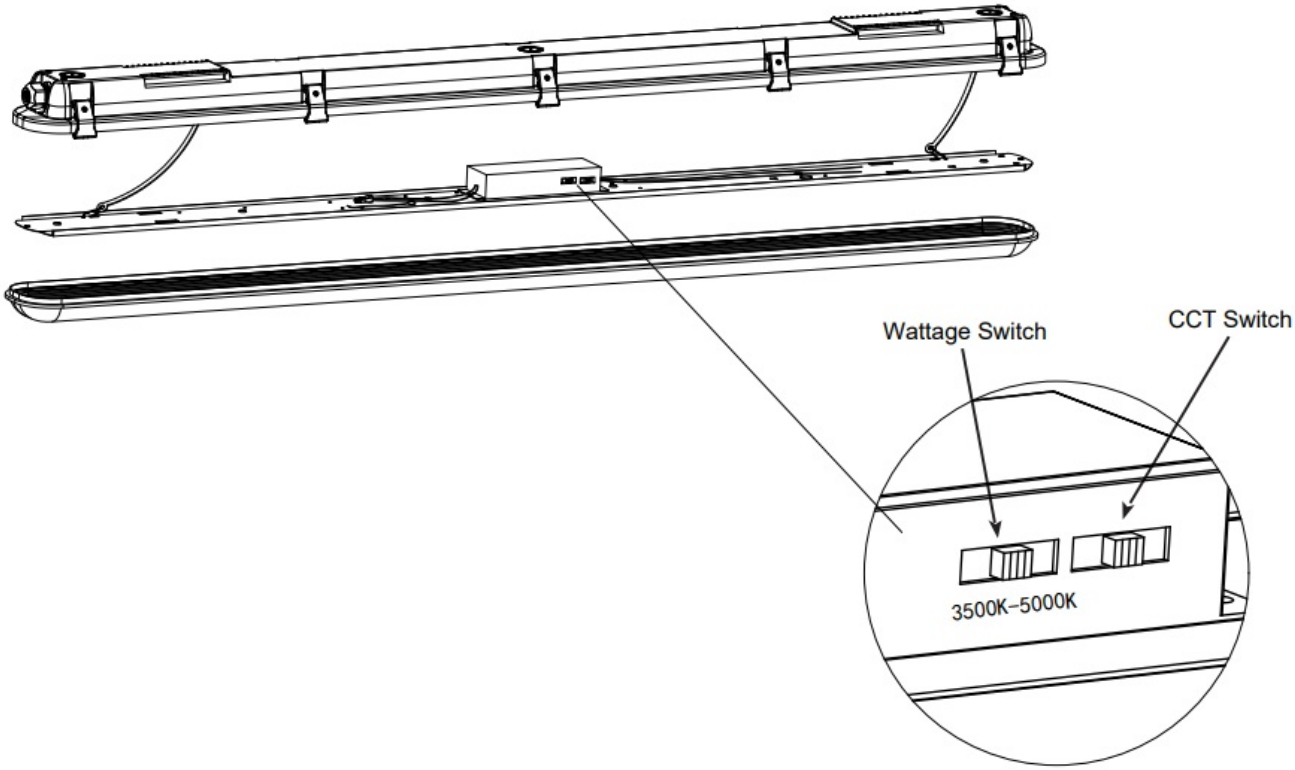

The end users may adjust the color temperature and lumen output respectively by the two DIP switch buttons integrated into the driver. Each DIP switch is accommodated with 3 options (left, middle and right), corresponding to 3 color temperatures and 3 wattages respectively, which can perform the desired color temperature and lumen output combination.

1. DIP switches are located on the driver.
2. Select a wattage and color temperature by sliding the switch left or right respectively to the desired value.

Factory Settings:

- CCT 5000K
- 34W for the 4ft PLTS-40045
- 45W for the 4ft PLTS-40046

Any further questions or interests, please visit
www.pltsolutions.com

Documents / Resources

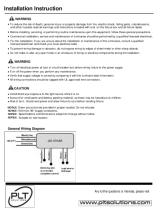

Installation Instruction

WARNING

- Failure to follow these instructions may result in property damage from fire, electrical shock, falling parts, explosions, and other hazards which may cause serious injury and/or death to installer and/or other persons and/or those parts.
- Before installing, placing, or performing maintenance on fixtures, turn the power off at the main electrical panel/breaker.
- Do not use the fixture in a manner that exceeds the rated capacity of the fixture. Do not use the fixture in a manner that is not in accordance with the instructions.
- Use the installation wiring and circuit breaker/fuse rating that is in accordance with the instructions, circuit supplied and the rating of the fixture.
- To prevent wiring damage or abrasion, do not expose wiring to edges of sheet metal or other sharp objects.
- Do not make or alter any open holes in the enclosure of any of the electrical components during installation.

WARNING

- Disconnect the power at fuse or circuit breaker box before wiring fixture to the power supply.
- Turn off the power when any service may be required.
- Verify that supply voltage is correct by comparing it with the nominal voltage information.
- Fixture must be installed and wired by a qualified and/or licensed electrician.

CAUTION

- Fixture must be installed in the right position shown in the art.
- Keep the instruction and warranty guide in a safe place. Do not throw away the instructions to children.
- Do not use the fixture in a manner that exceeds the rated capacity of the fixture.

NOTE: Follow all local and national ordinances and codes.
NOTE: Use only the wire gauge specified in the instructions.
NOTE: Specification and/or product appearance may be changed without notice.
NOTE: Suitable for wet location.

General Wiring Diagram

PLT

Any further questions or interests, please visit

www.pltsolutions.com

PLT SOLUTIONS Wattage and Color Selectable LED Vapor Tight [pdf] Instruction Manual Wattage and Color Selectable LED Vapor Tight, Color Selectable LED Vapor Tight, Selectable LED Vapor Tight, LED Vapor Tight, Vapor Tight, Tight

Manuals+, home privacy