MACURCO CD-6B Carbon Dioxide Detector and Controller Instruction Manual

MACURCO
GAS DETECTION

Macurco™ CD-6B
Carbon Dioxide Detector & Controller
User Instructions

IMPORTANT: Keep these user instructions for reference.

Contents

1 General Safety Information
2 Use Instructions and Limitations
3 Installation and Operating Instructions
4 Operations
5 Troubleshooting
6 Maintenance
7 Testing
8 Appendix A – Table of Figures
9 Appendix B – Menu Structure
10 Macurco Gas Detection Product limited warranty
11 Documents / Resources
11.1 References

General Safety Information

The following instructions are intended to serve as a general guideline for the use of the Macurco CD-6B Carbon Dioxide Detector. This manual is not to be considered all-inclusive, nor is it intended to replace the policy and procedures for your facility. If you have any doubts about the applicability of the equipment to your situation, consult an industrial hygienist or call Technical Support at 1-844-325-3050.

1.1 List of warnings

⚠ WARNING

Each person using this equipment must read and understand the information in this user manual before use. Use

of this equipment by untrained or unqualified persons or use that is not in accordance with this user manual, may adversely affect product performance.
Use only for monitoring the gas which the sensor and monitor is designed to detect. Failure to do so may result in exposures to gases not detectable and cause serious injury or death. For proper use, see supervisor or user manual, or contact Technical Support at 1-844-325-3050.
This equipment may not function effectively below 32°F or above 122°F (0°C or above 50°C). Using the detector outside of this temperature range may adversely affect product performance.
This detector helps monitor for the presence and concentration level of a certain specified airborne gas. Misuse may produce an inaccurate reading, which means that higher levels of the gas being monitored may be present and could result in overexposure and cause serious injury or death. For proper use, see supervisor or User manual, or contact Technical Support at 1-844-325-3050.
Do not disassemble unit or attempt to repair or modify any component of this instrument. This instrument contains no user serviceable parts, and substitution of components may impair product performance.
Using a certified gas with a concentration other than the one listed for this detector when conducting a calibration verification test (bump test) or calibration will produce inaccurate readings. This means that higher levels of the gas being monitored may be present and could result in overexposure. For proper use, see supervisor or User manual, or contact Technical Support at 1844-325-3050.
The following steps must be performed when conducting a calibration verification test (bump test) or calibration to ensure proper performance of the monitor.
Failure to do so may adversely affect product performance.

- When performing a calibration verification test (bump test) and calibration only use certified calibration gas at the required concentration level.
- Do not test with expired calibration gas.
- Do not cover or obstruct display or visual alarm cover.
- Ensure sensor inlets are unobstructed and are free of debris

Failure to follow instructions outlined in this user manual can result in sickness or death.

Use Instructions and Limitations

The Macurco CD-6B is a three relay Carbon Dioxide (CO_2) detector and controller available in low voltage.
The CD-6B has three selectable alarm relays, buzzer, and digital display options.
The CD-6B is a low-level meter capable of displaying from 0 to 5.0% vol. with a display resolution of 0.01% vol. (measurement is % by volume) of CO_2.
The CD-6B is factory calibrated and 100% tested for proper operation.
The CD-6B has the option to use automated background calibration (Abc) to set the clean air level on a regular basis.
If not using automated background calibration, the CD-6B requires a manual calibration process at a minimum of once every year using the Macurco CD6B-FCK calibration kit.
Carbon dioxide is a colorless, odorless gas that is produced both by people exhaling CO_2 as well the burning of gasoline, coal, oil, and wood. The outdoor concentration of carbon dioxide can vary from 350-450 parts per million (ppm) or higher in areas with high vehicle traffic or industrial activity. The indoor CO_2 level depends upon the number of people present, how long an area has been occupied, the amount of outdoor fresh air entering the area and other factors. CO_2 concentrations indoors can vary several hundred parts per million in areas with many people present for an extended period and where fresh air ventilation is limited. Outdoor “fresh” air ventilation is important as it can dilute CO_2 levels of the indoor environment. The amount of fresh air that should be supplied to a room depends on the type of facility and room. Ventilation should keep carbon dioxide concentrations below 1000 ppm and create indoor air quality conditions that are acceptable to most individuals.

⚠ WARNING
Each person using this equipment must read and understand the information in this user manual before use. Use of this equipment by untrained or unqualified persons or use that is not in accordance with this user manual, may adversely affect product performance.

2.1 Use For

The CD-6B provides CO2 detection and automatic ventilation control for buildings in non-hazardous locations wherever 100 lbs or more of CO2 is stored – bars, restaurants, breweries, etc.

The Awareness Alarm and Alarm 1 Relay is intended to locally warn users of high level of CO2. The Alarm 2 Relay and Alarm 3 Relay are intended to sound remote alarm functions to warn building users of high CO2 concentrations. The CD-6B is not compatible with Macurco DVP Control Panels. The three (3) dry contact relays can be connected back to a Fire or security panel.

⚠ WARNING

Use only for monitoring the gas which the sensor and monitor is designed to detect. Failure to do so may result in exposures to gases not detectable and cause serious injury or death. For proper use, see supervisor or user manual, or contact Technical Support at 1-844-325-3050.

2.2 Do NOT use for

The CD-6B is not intended for use in hazardous locations or industrial applications such as refineries, chemical plants, etc. Do not mount the CD-6B where the normal ambient temperature is below 32°F or exceeds 121°F (0°C or above 50°C). The CD-6B mounts on a type 4S electrical box supplied by the contractor. Do not install the CD-6B inside another box unless it has good air flow through it.

⚠ WARNING

This equipment may not function effectively below 32°F or above 122°F (0°C or above 50°C).
Using the detector outside of this temperature range may adversely affect product performance.

2.3 Features

- ETL LISTED to UL 61010-1, Certified to CSA C22.2#61010-1
- Low level meter capable of displaying from 0 to 5.0% vol. of CO2 with resolution of 0.01% vol.
- Three dry contact alarm relays for control of ventilation systems / communication with alarm system
- Mounts on a standard 4×4 electrical box and becomes cover for the box
- Supervised system: any internal detector problem will cause the buzzer to activate
- Carbon Dioxide sensor has an expected 15-year life. EOL indicator after 180 months of sensor power-up
- Optional automated background calibration to set the clean air level on a regular basis
- Manual calibration if automated background calibration option is disabled
- One screw access for testing and calibration. Calibration and calibration verification test kit is available.

2.4 Specifications

- Shipping Weight: 1 pound (0.45 kg)
- Size: 4 1/2 x 4 x 2 1/8 in. (11.4 X 11.4 X 5.3 cm)
- Color: White or Dark Gray
- Connections: plugs/terminals
- Mounting box: (not included) 4×4 electric
- Alarm 1 Relay: SPST to switch 2.0A load, up to 240 VAC or 30 VDC
- Alarm 1 Relay configuration: selectable N.O. (default) or N.C.
- Alarm 1 Relay alarm level settings: “diS”, 0.25, 0.50 (default), 1.00, 1.50, 2.00, 2.50, 3.00, 3.50, 4.00, 4.50, 5.00
- Alarm 1 Relay latching: off (on)
- Alarm 1 Relay 8-hour time weighted average option: On (OFF)
- Alarm 1 Relay trouble condition: on (off)
- Alarm 2 Relay: SPST to switch 2.0A load, up to 240 VAC or 30 VDC
- Alarm 2 Relay configuration: selectable N.O. (default) or N.C.

- Alarm 2 Relay alarm level settings: “diS”, 0.25, 0.50, 1.00, 1.50 (default), 2.00, 2.50, 3.00, 3.50, 4.00, 4.50, 5.00
- Alarm 2 Relay latching: off (on)
- Alarm 3 Relay: SPDT to switch 2.0A load, up to 240 VAC or 30 VDC
- Alarm 3 Relay configuration can be wired to N.O. or N.C.
- Alarm 3 Relay alarm level settings: “diS”, 0.25, 0.50, 1.00, 1.50, 2.00, 2.50, 3.00 (default), 3.50, 4.00, 4.50, 5.00
- Alarm 3 Relay latching: on (off)
- Buzzer: 85 dBA at 10cm settable to off or on (default)
- Digital display: 4-digit LED selectable to off or on (default)
- Operating Environment: Temperature range 32°F to 121°F (0°C to 50°C), Humidity range 0 to 85% RH non-condensing, Pressure range 1 ATM ± 20%
- Storage Environment: Temperature range 0°F to 125°F (-18°C to 52°C), Humidity range 0-99% RH non-condensing
- Power: 3 W (max) from 12 to 24 VAC or 12 to 32 VDC
- Current (max) @ 24 VDC: 50 mA in alarm (three relays), 40 mA in alarm (two relays), 30 mA (1 relay only), and 25 mA (standby)

Installation and Operating Instructions

WARNING
This detector helps monitor for the presence and concentration level of a certain specified airborne gas. Misuse may produce an inaccurate reading, which means that higher levels of the gas being monitored may be present and could result in overexposure and cause serious injury or death. For proper use, see supervisor or User manual, or contact Technical Support at 1-844-325-3050.

3.1 Location

Mounting height will be dependent on the application. For applications with CO2 tanks, mount height should be about one foot above the floor. For indoor air quality, mount detector at breathing level, about 5 feet (1.5 meters) above the floor on a wall or column in a central area where air movement is generally good. The unit, on average, can cover about 5,000 sq. ft. (465 sq. meters). The coverage depends on air movement within the room or facility. Extra detectors may be needed near any areas where people work or where the air is stagnant. The CD-6B mounts on a 4×4 electrical box supplied by the contractor. Do not install the CD-6B inside another box unless it has good air flow through it. Do NOT mount the CD-6B where the normal ambient temperature is below 32°F or exceeds 121°F (below 0°C or above 50°C).

WARNING
High voltage terminals (120/240 VAC) are located within this detector, presenting a hazard to service technicians. Only qualified technicians should open the detector case and service the internal circuits. Ensure power is de-energized from the detector relays prior to servicing the unit. Failure to do so may result in electrical shock.

3.2 Installation

1. The CD-6B mounts on a 4” square (or 4×4) electrical box supplied by the contractor. Do not mount the CD-6B inside another box, unless it has good air flow through it.
2. Connect the CD-6B to Class 2 Listed power supply only. It is suggested to use a dedicated transformer for powering the unit or units because of possible interferences from other devices on the same power supply.
3. Connect the CD-6B to the control cables with terminal plugs. When making connections, make sure the power is de-energized.
4. There are two terminals for Power: 12 to 24 VAC or 12 to 32 VDC, with no polarity preference.

5. There are two terminals for the dry alarm relay contacts. The alarm relays can switch up to 2.0 A load, up to 240 VAC or 30 VDC. The alarm relays are activated if gas reaches or exceeds the alarm settings. See section 4.5 Default – Factory Settings of these User instructions for details on relay settings.
6. The Alarm 1 Relay and Alarm 2 Relay can be configured to normally open (N.O.) (default) or normally closed (N.C.). Alarm 3 Relay can be wired N.O or N.C.
7. The relays will activate if the gas concentration exceeds alarm set point. Note that if the alarm relay set point is set to “diS”, the alarm relay will not engage at all.
8. The alarm relays can be configured for latching or non-latching. When latching is set to “On” and the gas concentration exceeds the relay setpoint, power will need to be interrupted or the “TEST” button pressed to un-latch (turn off) the relay condition. When latching is set to “OFF”, the relay will deactivate once the gas concentration drops below the alarm set point.
9. The Alarm 1 Relay will engage in trouble condition (if the Trouble Fan Setting Option is set to “On”) and will disengage once trouble condition is cleared.

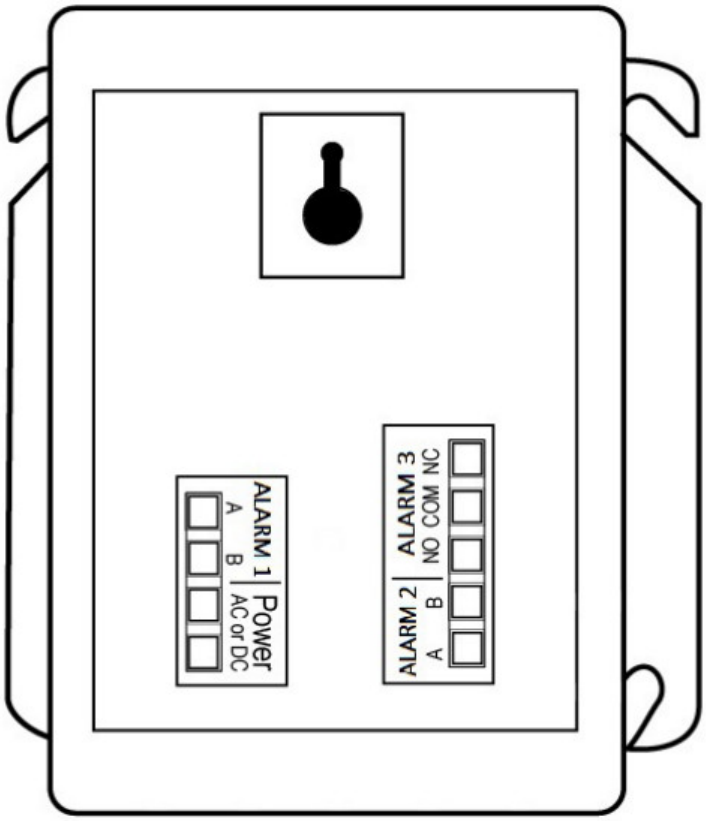

Figure 3-2 CD-6B Rear View

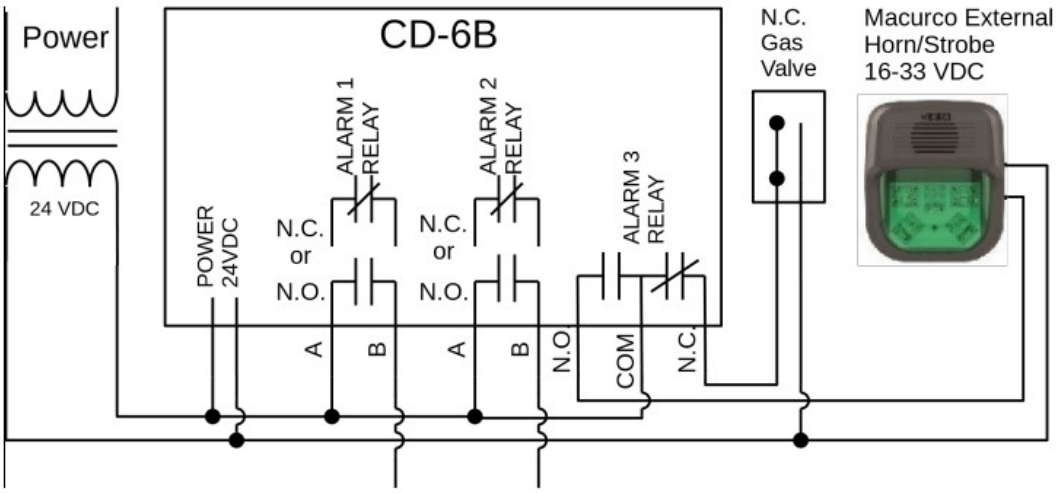

Figure 3-3 CD-6B Typical Installation wiring diagram

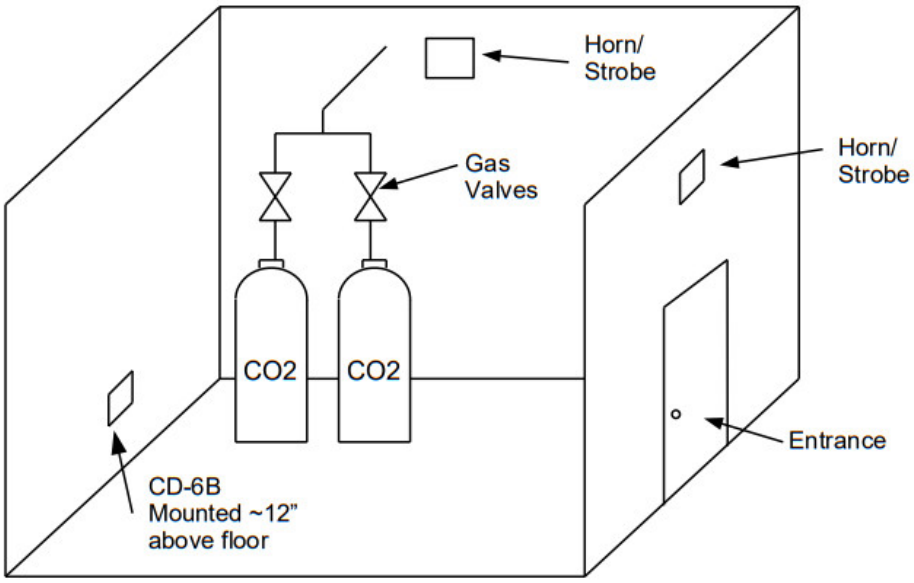

Figure 3-4 CD-6B Typical Installation Layout

NOTE: The detector should be mounted as close to the primary leak source as possible. If the tanks are inside, the detector is typically placed as shown above. If the tanks are outside, the detector is typically placed at the connection points of the conduit.

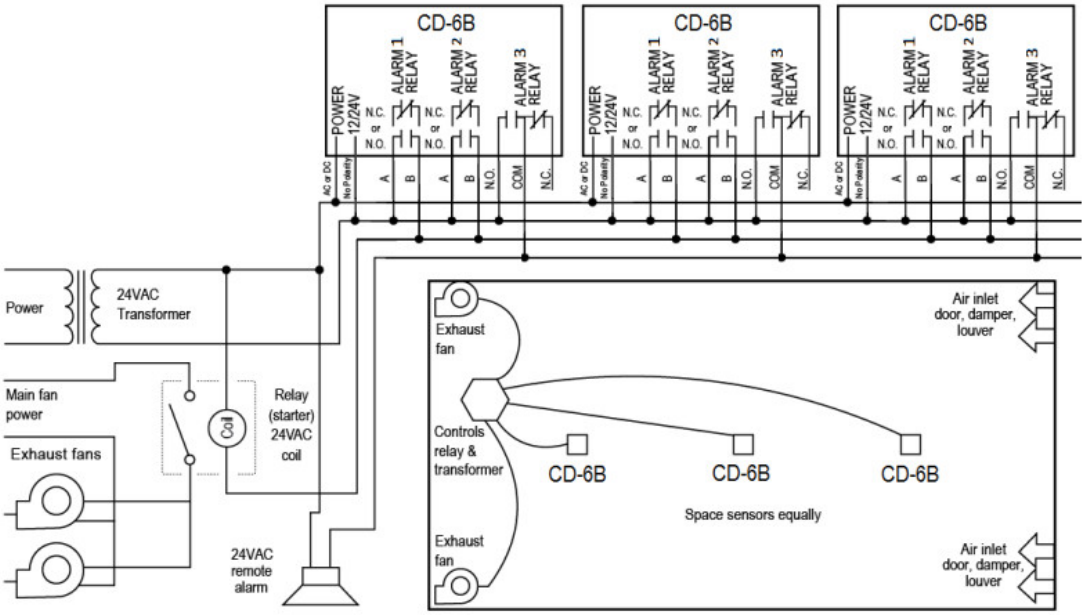

Figure 3-5 CD-6B Multiple Device diagram

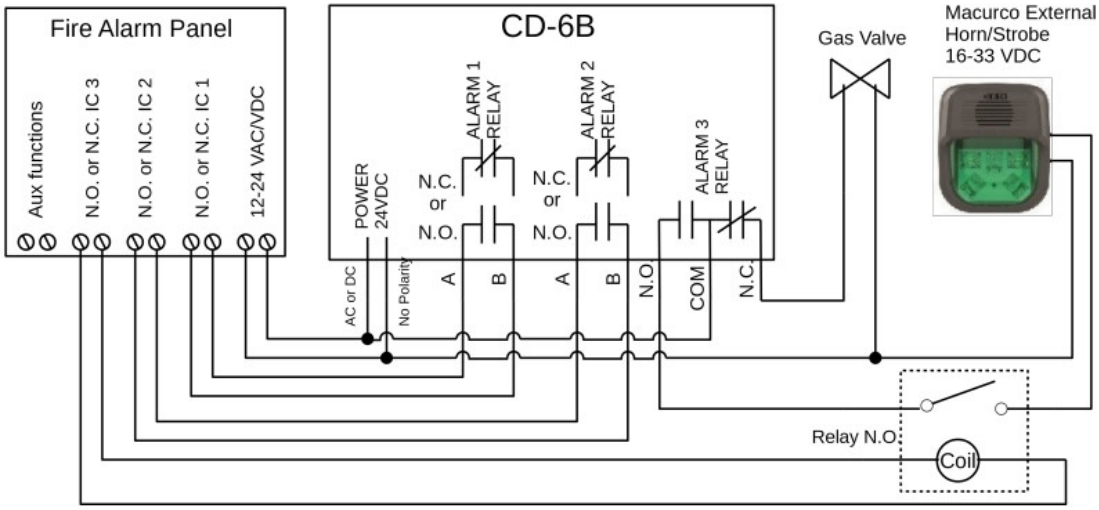

Figure 3-6 CD-6B Alarm Control Panel diagram

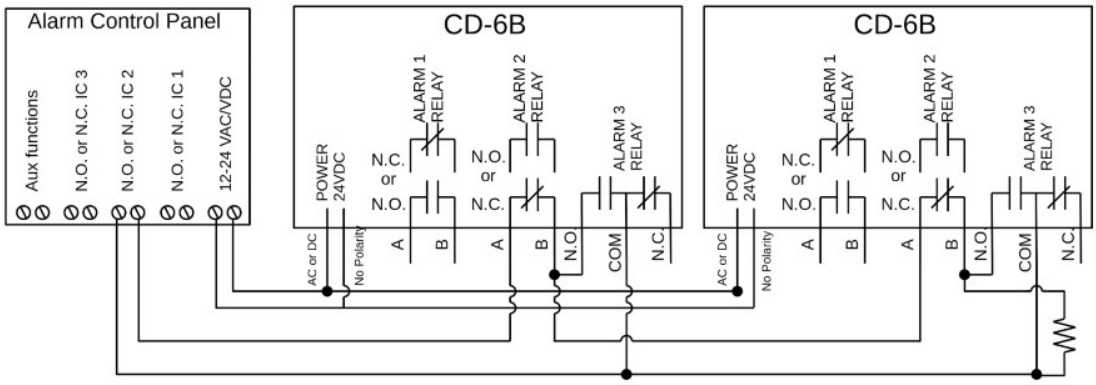

Figure 3-7 CD-6B Alternate Alarm Panel

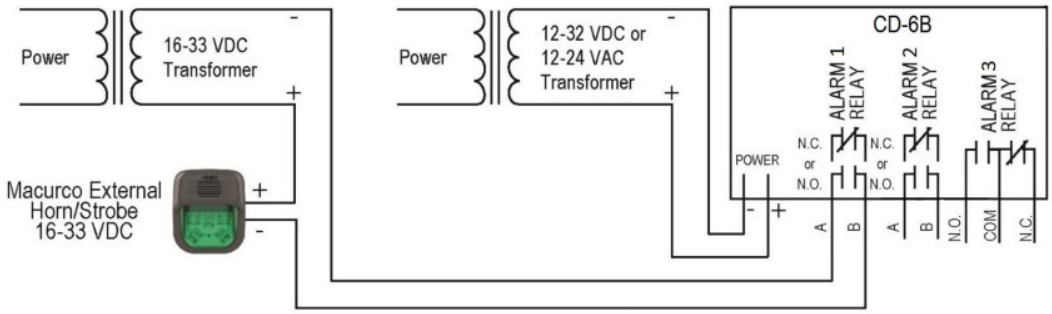

Figure 3-8 CD-6B Horn & Strobe Combo Wiring

3.3 Wiring Connections

All field wiring is completed via modular connectors (provided) except for the safety ground. Read the following specific instructions for each connection first. Then, proceed to section 3.3.5 Install the Wiring.

3.3.1 Power Connection

Connect the CD-6B to Class 2 Listed power supply only. It is suggested to use a separate transformer for powering the unit or units because of possible interferences from other devices on the same power supply. There are two terminals for Power: 12 to 32 VDC Nominal or 12 to 24 VAC Nominal, with no polarity preference.

3.3.2 Alarm 1 Relay Connection

The Alarm 1 Relay connections (A and B) are available at the modular connector. There is no polarity for these connections. The Alarm 1 Relay is SPST to switch 2 A load, up to 240 VAC or 30 VDC.

3.3.3 Alarm 2 Relay Connection

The Alarm 2 Relay connections (A and B) are available at the modular connector. There is no polarity for these connections. The Alarm 2 Relay is SPST to switch 2 A load, up to 240 VAC or 30 VDC.

3.3.4 Alarm 3 Relay Connection

The Alarm 3 Relay connections (NO, COM, NC) are available at the modular connector. There is no polarity for these connections. The Alarm 3 Relay is SPDT to switch 2 A load, up to 240 VAC or 30 VDC.

a. Connect one wire to NO and one to COM for normally open configuration.

b. Connect one wire to NC and one to COM for normally closed configuration.

3.3.5 Install the Wiring

To install the wiring, first read the above details for the specific wiring component you are installing. Then, proceed as follows:

1. Make sure the power to the CD-6B is turned off.
2. Locate the modular connectors on the back of the CD-6B. Disconnect the modular connector from the header

on the detector.

3. Strip the insulation of each wire back approximately 1/4 in. (6.5 mm).
4. Insert the bare wire into the terminal and tighten the screw clamp. Ensure that the wire cannot easily be pulled from the connector.
5. When the wires are connected, seat the modular connector into the header ensuring that the latch engages.

NOTE: 22 to 12 AWG wire shall be used. Wire used shall meet the temperature range of the detector i.e. 32°F to 121° F (0°C to 50°C).

Operations

4.1 Power up

The CD-6B cycles through an internal self-test cycle for the first minute that it is powered. The unit will execute the test cycle any time power is dropped and reapplied (i.e. power failure).
During the entire self-test cycle the indicator LED will flash green.
The display will flash between “Cd6b” and the firmware version for the first 2 seconds, then count down from 60 to 0 (if the display setting (dSP) is “On”).
The Alarm 1 Relay will be active for the entire power on sequence (if PUt is on). The Alarm 2 Relay and Alarm 3 Relay will be activated for the first 10 seconds of power on (if PUt is on).
When the display countdown reaches 0, the unit will take its first sample of air and the indicator LED will turn solid green indicating the completion of the power up test.

4.2 Awareness Alarm

The Awareness Alarm is set at 0.50% vol and is not user configurable. When the gas reading is equal to or greater than 0.50% vol, the unit indicates an Awareness Alarm.
During an Awareness Alarm, the buzzer will beep every 60 seconds. If the display is ON, the display will flash the gas reading.

NOTE: The Awareness Alarm has the lowest alarm priority.

4.3 Alarm 1 Relay

- To set the Alarm 1 Relay set point, use the “A1S” setting in the Configuration menu. The selectable values are “diS”, 0.25, 0.50 (default), 1.00, 1.50, 2.00, 2.50, 3.00, 3.50, 4.00, 4.50, 5.00.
- The Alarm 1 Relay can be triggered by an instantaneous reading or a time weighted average. This can be selected via the “A1t” setting in the Configuration menu. The time weighted average uses readings over the previous 8-hour period to calculate the average. The default setting is “On”.
- The Alarm 1 Relay can be configured to nO or nC. Default is nO. This can be changed via the “A1c” setting in the Configuration menu.
- To set the Alarm 1 latching behavior, use the “A1L” setting in the Configuration menu. Default is nonlatching “OFF”.
- If the “tFS” setting is “On” the Alarm 1 Relay will engage during a trouble condition. The default setting is “OFF”. The “tFS” setting can be changed in the Configuration menu.
- Electrical Ratings: SPST to switch 2 A load, up to 240 VAC or 30 VDC

4.4 Alarm 2 Relay

- To set the Alarm 2 Relay set point, use the “A2S” setting in the Configuration menu. The selectable values are “diS”, 0.25, 0.50, 1.00, 1.50 (default), 2.00, 2.50, 3.00, 3.50, 4.00, 4.50, 5.00.

- The Alarm 2 Relay can be configured to nO or nC. Default is nO. This can be changed via the “A2c” setting in the Configuration menu.
- To set the Alarm 2 latching behavior, use the “A2L” setting in the Configuration menu. Default is nonlatching “OFF”.
- The Alarm 2 relay responds to instantaneous gas reading only (no time weighted average option).
- Electrical Ratings: SPST to switch 2 A load, up to 240 VAC or 30 VDC

4.5 Alarm 3 Relay

- To set the Alarm 3 Relay set point, use the “A3S” setting in the Configuration menu. The selectable values are “diS”, 0.25, 0.50, 1.00, 1.50, 2.00, 2.50, 3.00 (default), 3.50, 4.00, 4.50, 5.00.
- To set the Alarm 3 latching behavior, use the “A3L” setting in the Configuration menu. Default is latching “ON”.
- The Alarm 3 Relay can be wired to nO or nC. This can only be changed by wiring.
- The Alarm 3 Relay responds to instantaneous gas reading only (no time weighted average option).
- Electrical Ratings: SPDT to switch 2 A load, up to 240 VAC or 30 VDC

4.6 Alarm Behavior

4.6.1 Alarm Priority

From lowest to highest, the alarm priority is as follows: Awareness Alarm, Alarm 1, Alarm 2, Alarm 3, Trouble Fault.

For example, the trouble condition has the highest priority. Therefore, when there is an occurrence of an alarm and a trouble condition at the same time, the unit behavior (buzzer, display and power LED) will follow the trouble condition.

4.6.2 Display turned “On”

With the display function turned “On”,

- Clean Air – and in clean air, the display will show the current concentration of CO2 in the air.
  Note: CO2 in “clean air” will not show 0 as normal atmospheric CO2 levels are between 0.03% and 0.05%.
- Awareness Alarm – and the CO2 percentage reaching 0.50%, the display will flash “gas reading”. The buzzer will sound (beep every 60 seconds) if “bUZ” is turned “On”.
- Alarm 1 level – and the CO2 percentage reaching the Alarm 1 Relay setting, the display will flash between “ALr1” and “current gas reading”. The buzzer will sound (beep every second) if “bUZ” is turned “On”.
- Alarm 2 level – and the CO2 percentage reaching the Alarm 2 Relay setting, the display will flash between “ALr2” and “current gas reading”. The buzzer will sound (beep every second) if “bUZ” is turned “On”.
- Alarm 3 level – and the CO2 percentage reaching the Alarm 3 Relay setting, the display will flash between “ALr3” and “current gas reading”. The buzzer will sound (beep every second) if “bUZ” is turned “On”.
- Trouble –and the device in a trouble state, the display will show the “t” Error code (t01 for example). If the Trouble Fan Setting “tFS” is enabled, the Alarm 1 Relay will activate. See section 5.1.2 “t” Error Codes and section 4.5.11 Trouble Fan Setting – “tFS”.

  • Calibration Due – With Calibration Period functionality enabled, if a detector is within 1 month of calibration period, the display will flash between “dUE” and current gas reading. Calibration Due is resolved only with a successful field calibration.

4.6.3 Display turned “Off”

With the display function turned off,

- Clean Air – and in clean air, the display does not show the CO2 concentration. Only the Power indicator light on will be on.
- Awareness Alarm – and the CO2 percentage reaching 0.50%, the display will show nothing. The buzzer will sound (beep every 60 seconds) if “bUZ” is turned “On”.
- Alarm 1 Level – and the CO2 percentage reaching the Alarm 1 Relay setting, the display will show “ALr1”. The buzzer will sound (beep every second) if “bUZ” is turned “On”.
- Alarm 2 Level – and the CO2 percentage reaching the Alarm 2 Relay setting, the display will show “ALr2”. The buzzer will sound (beep every second) if “bUZ” is turned “On”.
- Alarm 3 Level – and the CO2 percentage reaching the Alarm 3 Relay setting, the display will show “ALr3”. The buzzer will sound (beep every second) if “bUZ” is turned “On”.
- Trouble – and the device in a trouble state, the display will display the “t” Error code (t01 for example). If the Trouble Fan Setting “tFS” is enabled, the Alarm 1 Relay will activate. See section 5.1.2 “t” Error Codes and section 4.5.11 Trouble Fan Setting – “tFS”.
- Calibration Due – With Calibration Period functionality enabled, if a detector is within 1 month of calibration period, the display will show “dUE” continuously. Calibration Due is resolved only with a successful field calibration.

4.7 Relay Latching

Each alarm relay has the relay latching option. This controls the alarm behavior after an alarm has been activated and the gas concentration returns below the alarm level.

Latching On – When the relay latching option is set to “On” and the gas concentration triggers the alarm, the relay will not deactivate when the gas concentration drops below the alarm level. The power will need to be interrupted or the “ENTER/TEST” button pressed to un-latch (turn off) the relay condition.

When a relay is latched and the reading is below the Alarm threshold or recovered from trouble, the display will flash between “ALrX” and “gas reading” (when display is ON) or solid “ALrX” (when display is OFF) where X is 1,2 or 3 corresponding to Alarm Relay 1, 2 or 3.

Latching Off – With the relay latching option set to “OFF” and the gas concentration dropping below the alarm level, the relays will de-activate and the buzzer will stop.

NOTE: When tFS is “On”, then Alarm Relay 1 is controlled by both A1S and Trouble. So, with tFS “On” and A1L “On” (Alarm Relay 1 set to latched), Alarm Relay 1 will also be latched when the unit goes into trouble.

4.8 Default – Factory Settings

Setting:	Default:
Power Up Test (Put)	Off
Display (dSP)	On
Buzzer (bUZ)	On
Alarm1 Relay Setting (A1S)	0.50
Alarm1 Relay Configuration (A1c)	Normally Open (NO)
Alarm1 Relay Latching (A1L)	Off
Alarm1 Time Weighted Average (A1t)	On
Alarm2 Relay Setting (A2S)	1.50
Alarm2 Relay Configuration (A2c)	Normally Open (NO)
Alarm2 Relay Latching (A2L)	Off
Alarm3 Relay Setting (A3S)	3.00
Alarm3 Relay Latching (A3L)	On
Trouble Fan Setting (tFS)	Off (mapped to Alarm1 relay)
Automatic Background Calibration (Abc)	On
Calibration Interval (CAL) (only visible when Abc is off)	diS

Table 4-1 Default settings

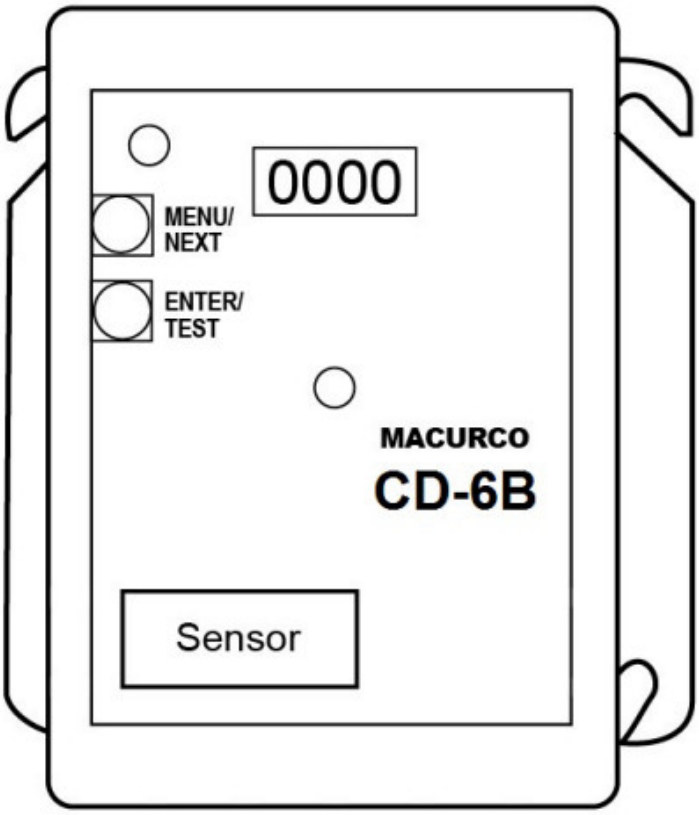

Figure 4-1 Board View

4.8.1 Select Default Configuration – “dEF”
Available options are “YES”, “nO”.
NOTE: This menu cannot be changed when the CD-6B is in calibration due or calibration overdue. (Refer to Section 4.8.16 Calibration Period – “CAL” for information on calibration due and calibration overdue.)

To select the Default Configuration (this will reset the device to its default settings), in normal mode:

1. Push the Next button to get to “Con” or the Configuration menu.
2. Push the Enter button to enter the Con menu.
3. The first selection is the “dEF” or Default setting. Push Enter.
4. If it is already in Default configuration, “YES” will be displayed and there will be no available action. If it is not already in Default configuration, “nO” will be displayed.
5. Push Next to change it to “YES” (display will begin flashing).
6. Push Enter to confirm resetting the device to its default settings (display will stop flashing).
7. Push Enter once more to return to the configuration menu.
8. Push Next until “End” is displayed.
9. Push Enter to return to normal operation.

4.8.2 Select Power-Up Test Setting – “PUt”
Available options are “OFF”, “On”.
To select the Power Up Test Configuration, in normal mode:

1. Push the Next button to get to “Con” or the Configuration menu.
2. Push the Enter button to enter the Con menu.
3. Push Next 1 time to get to “PUt” or Power Up Test Configuration.
4. Push Enter. The display will show the current setting.
5. Push Next to cycle through the available settings (display will begin flashing).
6. Push Enter to confirm the new setting (display will stop flashing).
7. Push Enter once more to return to the configuration menu.
8. Push Next until “End” is displayed.
9. Push Enter to return to normal operation.

4.8.3 Select Display Configuration – “dSP”
Available options are “OFF”, “On”.
To select the Display Configuration, in normal mode:

1. Push the Next button to get to “Con” or the Configuration menu.
2. Push the Enter button to enter the Con menu.
3. Push Next 2 times to get to “dSP” or Display Configuration.
4. Push Enter. The display will show the current setting.
5. Push Next to cycle through the available settings (display will begin flashing).
6. Push Enter to confirm the new setting (display will stop flashing).
7. Push Enter once more to return to the configuration menu.
8. Push Next until “End” is displayed.
9. Push Enter to return to normal operation.

4.8.4 Select Buzzer Configuration – “bUZ”
Available options are “OFF”, “On”.
To select the Buzzer Configuration, in normal mode:

1. Push the Next button to get to “Con” or the Configuration menu.
2. Push the Enter button to enter the Con menu.
3. Push Next 3 times to get to “bUZ” or Buzzer setting.
4. Push Enter. The display will show the current setting.
5. Push Next to cycle through the available settings (display will begin flashing).
6. Push Enter to confirm the new setting (display will stop flashing).
7. Push Enter once more to return to the configuration menu.
8. Push Next until “End” is displayed.
9. Push Enter to return to normal operation.

4.8.5 Select Alarm 1 Relay Setting – “A1S”
Available options are “diS”, 0.25, 0.50, 1.00, 1.50, 2.00, 2.50, 3.00, 3.50, 4.00, 4.50, 5.00.
To select the Alarm 1 Relay Setting, in normal mode:

1. Push the Next button to get to “Con” or the Configuration menu.
2. Push the Enter button to enter the Con menu.
3. Push Next 4 times to get to “A1S” or Alarm 1 Relay Setting.
4. Push Enter. The display will show the current setting.
5. Push Next to cycle through the available settings (display will begin flashing).
6. Push Enter to confirm the new setting (display will stop flashing).
7. Push Enter once more to return to the configuration menu.
8. Push Next until “End” is displayed.
9. Push Enter to return to normal operation.

4.8.6 Select Alarm 1 Relay Config – “A1c”
Available options are “nO”, “nC”.
To select the Alarm 1 Relay Configuration, in normal mode:

1. Push the Next button to get to “Con” or the Configuration menu.
2. Push the Enter button to enter the Con menu.
3. Push Next 5 times to get to “A1c” or Alarm 1 Relay Configuration.
4. Push Enter. The display will show the current setting.
5. Push Next to cycle through the available settings (display will begin flashing).
6. Push Enter to confirm the new setting (display will stop flashing).
7. Push Enter once more to return to the configuration menu.
8. Push Next until “End” is displayed.
9. Push Enter to return to normal operation.

4.8.7 Select Alarm 1 Relay Latching – “A1L”
Available options are “OFF”, “On”.
To select the Alarm 1 Relay Latching configuration, in normal mode:

1. Push the Next button to get to “Con” or the Configuration menu.
2. Push the Enter button to enter the Con menu.
3. Push Next 6 times to get to “A1L” or Alarm 1 Relay Latching.
4. Push Enter. The display will show the current setting.
5. Push Next to cycle through the available settings (display will begin flashing).
6. Push Enter to confirm the new setting (display will stop flashing).
7. Push Enter once more to return to the configuration menu.
8. Push Next until “End” is displayed.
9. Push Enter to return to normal operation.

4.8.8 Select Alarm 1 tWa – “A1t”
Available options are “OFF”, “On”.
To select the Alarm 1 tWa, in normal mode:

1. Push the Next button to get to “Con” or the Configuration menu.
2. Push the Enter button to enter the Con menu.
3. Push Next 7 times to get to “A1t” or Alarm 1 tWa.
4. Push Enter. The display will show the current setting.
5. Push Next to cycle through the available settings (display will begin flashing).
6. Push Enter to confirm the new setting (display will stop flashing).
7. Push Enter once more to return to the configuration menu.
8. Push Next until “End” is displayed.
9. Push Enter to return to normal operation.

4.8.9 Select Alarm 2 Relay Setting – “A2S”
Available options are “diS”, 0.25, 0.50, 1.00, 1.50, 2.00, 2.50, 3.00, 3.50, 4.00, 4.50, 5.00.
To select the Alarm 2 Relay Setting, in normal mode:

1. Push the Next button to get to “Con” or the Configuration menu.
2. Push the Enter button to enter the Con menu.
3. Push Next 8 times to get to “A2S” or Alarm 2 Relay Setting.
4. Push Enter. The display will show the current setting.
5. Push Next to cycle through the available settings (display will begin flashing).
6. Push Enter to confirm the new setting (display will stop flashing).
7. Push Enter once more to return to the configuration menu.
8. Push Next until “End” is displayed.
9. Push Enter to return to normal operation.

4.8.10 Select Alarm 2 Relay Configuration – “A2c”
Available options are “nO”, “nC”.
To select the Alarm 2 Relay Configuration, in normal mode:

1. Push the Next button to get to “Con” or the Configuration menu.
2. Push the Enter button to enter the Con menu.
3. Push Next 9 times to get to “A2c” or Alarm 2 Relay Configuration.

4. Push Enter. The display will show the current setting.
5. Push Next to cycle through the available settings (display will begin flashing).
6. Push Enter to confirm the new setting (display will stop flashing).
7. Push Enter once more to return to the configuration menu.
8. Push Next until “End” is displayed.
9. Push Enter to return to normal operation.

4.8.11 Select Alarm 2 Relay Latching – “A2L”
Available options are “OFF”, “On”.
To select the Alarm 2 Relay Latching configuration, in normal mode:

1. Push the Next button to get to “Con” or the Configuration menu.
2. Push the Enter button to enter the Con menu.
3. Push Next 10 times to get to “A2L” or Alarm2 Relay Latching.
4. Push Enter. The display will show the current setting.
5. Push Next to cycle through the available settings (display will begin flashing).
6. Push Enter to confirm the new setting (display will stop flashing).
7. Push Enter once more to return to the configuration menu.
8. Push Next until “End” is displayed.
9. Push Enter to return to normal operation.

4.8.12 Select Alarm 3 Relay Setting – “A3S”
Available options are “diS”, 0.25, 0.50, 1.00, 1.50, 2.00, 2.50, 3.00, 3.50, 4.00, 4.50, 5.00.
To select the Alarm 3 Relay Setting, in normal mode:

1. Push the Next button to get to “Con” or the Configuration menu.
2. Push the Enter button to enter the Con menu.
3. Push Next 11 times to get to “A3S” or Alarm 1 Relay Setting.
4. Push Enter. The display will show the current setting.
5. Push Next to cycle through the available settings (display will begin flashing).
6. Push Enter to confirm the new setting (display will stop flashing).
7. Push Enter once more to return to the configuration menu.
8. Push Next until “End” is displayed.
9. Push Enter to return to normal operation.

4.8.13 Select Alarm 3 Relay Latching – “A3L”
Available options are “OFF”, “On”.
To select the Alarm 3 Relay Latching configuration, in normal mode:

1. Push the Next button to get to “Con” or the Configuration menu.
2. Push the Enter button to enter the Con menu.
3. Push Next 12 times to get to “A3L” or Alarm3 Relay Latching.
4. Push Enter. The display will show the current setting.
5. Push Next to cycle through the available settings (display will begin flashing).
6. Push Enter to confirm the new setting (display will stop flashing).

7. Push Enter once more to return to the configuration menu.
8. Push Next until “End” is displayed.
9. Push Enter to return to normal operation.

4.8.14 Select Trouble Fan Setting – “tFS”
Available options are “OFF”, “On”.
To select the Trouble Fan Setting, in normal mode:
If turned on, the Trouble Fan Setting will activate when the Alarm 1 relay is activated.

1. Push the Next button to get to “Con” or the Configuration menu.
2. Push the Enter button to enter the Con menu.
3. Push Next 13 times to get to “tFS” or Trouble Fan Setting.
4. Push Enter. The display will show the current setting.
5. Push Next to cycle through the available settings (display will begin flashing).
6. Push Enter to confirm the new setting (display will stop flashing).
7. Push Enter once more to return to the configuration menu.
8. Push Next until “End” is displayed.
9. Push Enter to return to normal operation.

4.8.15 Select Automatic Background Calibration – “Abc”
Available options are “OFF”, “On”.

NOTE: This setting cannot be changed when unit is in Calibration Due or Calibration Overdue (“t 80” error code).
To select the Automatic Background Calibration setting, in normal mode:

1. Push the Next button to get to “Con” or the Configuration menu.
2. Push the Enter button to enter the Con menu.
3. Push Next 14 times (15 times if current setting is “OFF”) to get to “Abc” or Automatic Background Calibration.
4. Push Enter. The display will show the current setting.
5. Push Next to cycle through the available settings (display will begin flashing).
6. Push Enter to confirm the new setting (display will stop flashing).
7. Push Enter once more to return to the configuration menu.
8. Push Next until “End” is displayed.
9. Push Enter to return to normal operation.

4.8.16 Calibration Period – “CAL”
This option is only available when “Abc” is turned “OFF”.

The value selected in Calibration Period settings is number of months. The CD-6B indicates a “calibration due” when it is within 1 month of the calibration period, and “calibration overdue” when the detector has reached or exceeded the calibration period. The Calibration Period Settings cannot be changed if the CD-6B is indicating “calibration due” or “calibration overdue”.

To select the Calibration Period Option, in normal mode:

1. Push the Next button to get to “Con” or the Configuration menu.
2. Push the Enter button to enter the Con menu.

3. Push Next 14 times to get to “CAL” or Calibration Period setting.
4. Push Enter. The display will show the current setting.
5. The default setting is “dIS”. Push Next to change it to 3, 6, 12 or 24 (flashing).
6. Push Enter to confirm the change (solid).
7. Push Enter again to return to “CAL” in the Con menu.
8. Push Next until “End” is displayed.
9. Push Enter to return to normal operation.

Troubleshooting

5.1 On-Board Diagnostics

The CD-6B monitors all critical functions of the unit through software diagnostics that continuously test and verify unit operations.

5.1.1 Trouble Condition

If a problem is found, the unit will switch to a fail-safe/error mode or trouble condition. In this error mode, the

- Alarm 1 Relay will be activated if tFS is On.
- unit will display the error code.
- green status indicator LED light will flash.
- buzzer will chirp intermittently.

To clear this mode, turn off power to the unit for a few seconds or push the ENTER/TEST button (inside the unit). This will cause the unit to restart the 1-minute self-test cycle.

5.1.2 “t” Error Codes

During a trouble condition, the display will show a “t” error code. Trouble is indicated on display by alternating every second “t XX” and “tYYY”, if XX is not zero, or “tYYY” only if XX is zero. Table 1 below shows the description of the problem associated with each “t” error code.

tXX	
t 01	Sensor Fatal Error (transmitted by the sensor) or Wrong Sensor Type (happens when firmware detects that a 5 %VOL sensor is not installed
t 02	Sensor Offset Regulation Error (transmitted by the sensor)
t 04	Sensor Algorithm Error (transmitted by the sensor)
t 08	Sensor Output Error (transmitted by the sensor)
t 10	Sensor Self Diagnostic Error (transmitted by the sensor)
t 20	Sensor Out of Range Error (transmitted by the sensor)
t 40	Sensor Memory Error (transmitted by the sensor)
t 80	Calibration overdue* (set by firmware)
tYYY	
t001	Missing Sensor (At Power Up only)
t004	EEPROM bad checksum
t008	Modbus communication error (during normal operation)
t010	Bad EEPROM
t020	Bad calibration
t040	Factory calibration failure: temperature, zero, span or never calibrated
t080	Factory pressure sensor fail
t100	Under range
t200	Sensor expired (see section 5.3 End-of-Life Signal to resolve error)
t400	Pressure sensor fault
t800	Board not tested

Table 5-1 ”t” Error Code Descriptions

If the trouble condition repeats frequently, check for continuous power and proper voltage. If power is not the problem and a unit has repeating trouble conditions, it may need to be returned to Macurco for service, per these User Instructions.

Multiple Error Codes – If multiple error codes occur simultaneously, the different error codes will be added together into one combined error code. For example, “t 08” and “t 80” occurring simultaneously will display as “t 88”.

If the sum for a digit (ones, tens or hundreds) is greater than 9, it will display the corresponding hexadecimal representation (see Table 2 – Decimal to Hexadecimal conversion below) of the sum. For example, if “t 02” and t “08” exist at same time, the unit will display “t 0A” (2 +8 = 10 and the hexadecimal equivalent of 10 = A). Similarly, if “t 40” and “t 80” exist at the same time, the unit will display “t c0”. This applies for both “t XX” and “tYYY” error codes.

Decimal Number	Hexadecimal Representation shown on display
10	A
11	b
12	c
13	d
14	E
15	F

Table 5-2 – Decimal to Hexadecimal conversion

5.2 Sensor Poisons

Unlike traditional catalytic bead and electrochemical sensors, IR sensors use a light source and a receptor to detect a specific gas. Therefore, the sensor is less likely to be affected by inhibitors or poison significantly enhancing safety and sensor life.

5.3 End-of-Life Signal

The non-replaceable infrared sensor (IR Sensor) of the CD-6B has a long life. Fifteen (15) years after the CD-6B is installed, the sensor end-of-life signal will be activated indicating that the CD-6B has reached the end of its typical usable life. The end-of-life signal will cause an error code t200 “Sensor expired”. See section 5.1.2 “t” Error Codes.

The end-of-life signal can be silenced for 48 hours by pressing the ENTER/TEST button or by temporarily dropping power to the unit. The end-of-life signal provides the user an opportunity to test and/or calibrate the sensor assuring that it is still performing within acceptable parameters though the sensor is nearing the end of its expected life. The silence function will continue to be available for 29 days after the CD-6B initiates the initial end-of-life signal. After this 29-day period, the CD-6B can no longer be silenced, and the unit must be replaced.

WARNING

Do not disassemble unit or attempt to repair or modify any component of this instrument. This instrument contains no user serviceable parts, and substitution of components may impair product performance.

Maintenance

The CD-6B is low maintenance. The unit uses a long life NDIR sensor that has a 15-year life expectancy (in normal conditions).

All maintenance and repair of products manufactured by Macurco are to be performed at the appropriate Macurco manufacturing facility. Macurco does not sanction any third-party repair facilities.

6.1 Calibration

The CD-6B uses an optional automated background calibration “Abc” to set the clean air level. The CD-6B will maintain accuracy if it is exposed to the “clean air reference value” (this reference value is the lowest concentration to which the sensor is exposed) at least once per week.

NOTE: This applies when used in the typical indoor ambient air with weekly unoccupied periods.

If automated background calibration “Abc” is disabled, manual calibration at regular intervals will be required to reliably maintain accuracy (See section 7 Testing). The device can be set to issue calibration reminders using the Calibration Period “CAL” setting (see section 4.8.16).

6.2 Sensor Life Reset

The Sensor Life can be extended only by 1 year, so the sensor life reset option is not available once the extended 1 year is over.

After resetting the sensor life, the unit will still indicate a “t 80” error and will need to be calibrated before it can be

used for the extended 1-year life.

To reset the sensor life,

1. Remove the Philips screw on the front of the CD-6B. Pull the front cover of the unit off.
2. From normal mode, press NEXT four times. The display will show “SEn” or Sensor Mode.
3. Press ENTER. The display will show “rSt” or Reset Sensor Mode.
4. Press ENTER to see the sensor reset status.
5. If the sensor life has already been reset, “don” will be displayed. If it has not been reset, “no” will be displayed. Press NEXT to change it to “YES” (flashing).
6. Press ENTER to confirm the change (solid) and press ENTER again to return to “rSt” in the “SEn” menu.
7. Press NEXT until “End” is displayed then press ENTER to get back to normal operation. The sensor life will be reset for 1 year.

6.3 Cleaning

Cleaning of the external surfaces is best carried out using a damp cloth with a mild detergent or soap. Use a vacuum cleaner with a soft brush to remove dust or contamination under the cover. Do not blow out the sensor with compressed air.

CAUTION

Avoid the use of harsh cleaning materials, abrasives and other organic solvents. Such materials may permanently scratch the surfaces and damage the display window, labels, sensor or instrument housing. High voltage terminals (100-240VAC) are located within this detector, presenting a hazard to service technicians. Only qualified technicians should open the detector case and service the internal circuits. Ensure power is removed from the detector prior to cleaning the unit.

Testing

WARNING

Using a certified gas with a concentration other than the one listed for this detector when conducting a calibration verification test (bump test) will produce inaccurate readings. This means that higher levels of the gas being monitored may be present and could result in overexposure. For proper use, see supervisor or User manual, or contact Technical Support at 1-844-325-3050.

All CD-6B units are factory calibrated and 100% tested for proper operation. During normal operation, the green status indicator LED light will be on steady and the alarm relays will be in standby mode.

The unit also performs a regular automatic self-test during normal operation. If the unit detects an improper voltage or inoperable component, it will default into Error mode. In error mode, the Alarm 1 Relay will be activated if tFS is On, the unit will display the error code, the green status indicator LED light will flash, and the buzzer will chirp intermittently.

7.1 Testing

Before performing a test, check that the green CD-6B status indicator LED light is illuminated continuously. If not, do not proceed with the tests. If the unit is in error mode, contact your local representative or Macurco technical support representative for information on resolving the problem.

7.1.1 Operation Test

An operation test will initiate the following sequence of tests:

1. Buzzer – On for 3 seconds, display flashing bUZ when buzzer is On.
2. Alarm 1 Relay – Energized for 5 seconds, display flashing A1rt when relay is On.
3. Alarm 2 Relay – Energized for 5 seconds, display flashing A2rt when relay is On.
4. Alarm 3 Relay – Energized for 5 seconds, display flashing A3rt when relay is On.

NOTE: If an alarm relay setting has been disabled “diS”, it will not appear in the operation test sequence.

To perform an operation test,

1. Remove the single screw in the middle of the front cover of the CD-6B.
2. Remove the front cover.
3. Observe the LED light on the front of the CD-6B. If the light is solid green proceed to step 5.
4. If the green status indicator LED light is off or flashing, refer to the General section above.
5. Locate the button labeled ENTER/TEST on the left side of the printed circuit board. Press ENTER/TEST.
6. The CD-6B will step through an operation test as described above.
7. When testing is completed, reassemble the unit.

7.1.2 Manual Operation Test

This option gives the user the opportunity to manually initiate an individual test for the buzzer (bUZ), Alarm 1 Relay (A1rt), Alarm 2 Relay (A2rt), Alarm 3 Relay (A3rt), and the sensor response to gas (gtS).

During each test, the following will occur:

- bUZ – Buzzer Test, 3 seconds, display flashing bUZ whe buzzer is On
- A1rt – Alarm 1 Relay Test, energized for 5 seconds, display flashing A1rt
- A2rt – Alarm 2 Relay Test, energized for 5 seconds, display flashing A2rt
- A3rt – Alarm 3 Relay Test, energized for 5 seconds, display flashing A3rt
- gtS – Gas Test, 3 minutes, display flashes between gtS and current gas reading, green LED blinking, relays are not triggered by gas reading, green LED continues blinking for another minute then becomes solid green

NOTE: If an alarm relay setting has been disabled “diS”, the test selection will not be displayed in the test menu.

To perform a manual operation test,

1. From normal operation mode press the NEXT button 2 times to get to the Test Mode (tSt).
2. Press the ENTER button once to get into the Test Menu.
3. Press the NEXT button to scroll through the five test options.
4. Press ENTER to initiate the selected test.
5. Once the test is complete, the display will return to a steady display.
6. Press NEXT until “End” is displayed to exit the test menu.
7. Press ENTER to return to normal mode.

7.2 Calibration Kit

WARNING

The following steps must be performed when conducting a calibration verification test (bump test) and calibration to ensure proper performance of the monitor. Failure to do so may adversely affect product performance.

- When performing a calibration verification test (bump test) and calibration only use certified calibration gas at the required concentration level.

- Do not test with expired calibration gas.
- Do not cover or obstruct display or visual alarm cover.
- Ensure sensor inlets are unobstructed and are free of debris

Failure to follow instructions outlined in this user manual can result in sickness or death.
A Field Calibration Kit, CD6B-FCK, is needed to complete a field calibration. These are available through local distribution.

- Gas cylinder –
  - 17L 400 ppm carbon dioxide (CO2) in air
  - 17L 5% volume carbon dioxide (CO2) in air
- Gas regulator 0.2 LPM
- About two feet of tubing
- CD-6-CH calibration hood
- Carry case

FCK Information
Several detectors can be calibrated with one FCK. The only limitation is the amount of gas in the cylinder. The 17-liter cylinder has approximately 85 minutes of continuous calibration run time. Replacement cylinders are available.
The gas cylinder should be replaced when the pressure gauge on the regulator shows 25-psi or less or has reached its expiration date.

NOTE: For optimum calibration results, it is suggested that the unit be in clean air, green light on, and be in a low ambient air flow.
NOTE: CD-6B must be tested or calibrated at regular intervals in accordance with the requirements of the National Fire Protection Association (NFPA) 720 or local code requirements. It is recommended to test or calibrate CD-6B at least annually.

7.3 Gas Testing

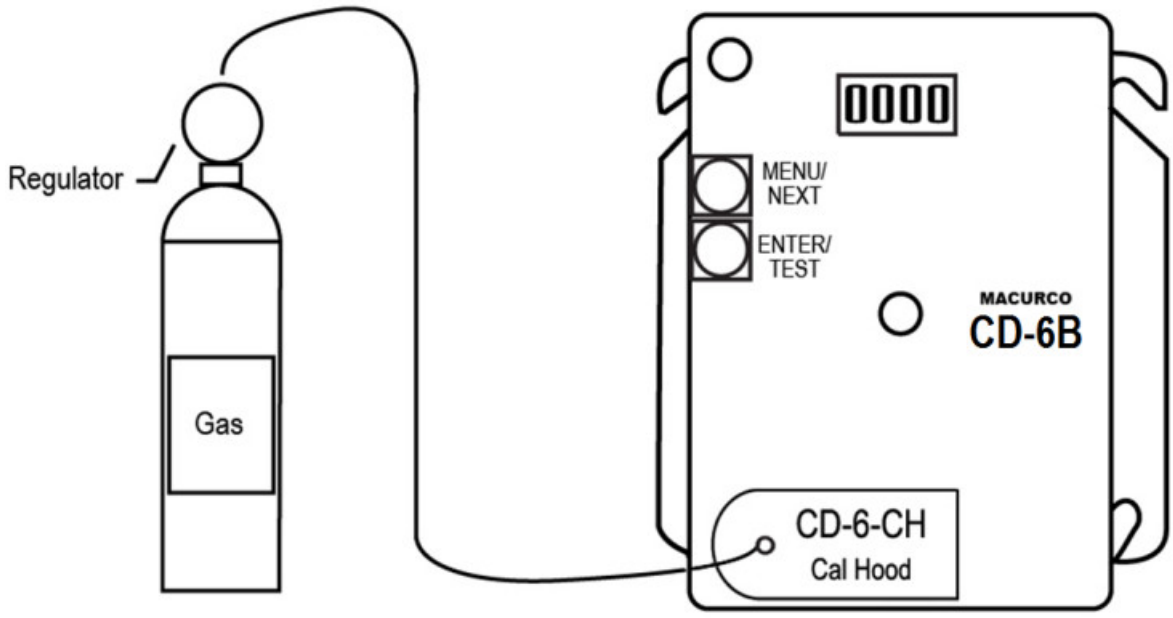

Figure 7-1 CD-6B Calibration Connection

7.3.1 Testing the Alarm Relays

NOTE: The CO2 concentration required to activate the alarm relays depends on the alarm relay settings.

1. Connect the 5% vol. cylinder of carbon dioxide to the regulator.
2. Check the pressure gauge on the regulator. If you have 25-psi or less, you will need to replace the gas canister. Check the expiration date on the cylinder, if it has passed the expiration date the cylinder should be replaced.
3. Place the Test Hood over the CO2 sensor. Turn on the regulator to start the gas flow.
4. The alarm relays should activate according to the settings.
5. With the display function turned “On” and the CO2 concentration reaching the Alarm 1 Relay setting, the display will flash between “ALr1 and “current gas reading”. The buzzer will sound indicating “Alarm” if the buzzer is turned “On”. With the display function turned off the display does not show the CO2 concentration but will show “ALr1” when the Alarm 1 relay is activated.

   NOTE: If the Alarm relay fails to operate within 2 minutes, there are four possibilities:

   a. The detector has the alarm relay disabled (diS). Set the desired Alarm relay to 1.5% and repeat the test.

   b. The gas cylinder is empty, check the pressure gauge. Replace the gas cylinder if 25-psi or less.

   c. Unit needs to be re-calibrated (automated background calibration or manual calibration and retest).

   d. The detector needs servicing (return unit to the factory for servicing).
6. Remove the gas from the sensor and replace the top cover.

7.3.2 Aerosol Test

Macurco does not currently have an aerosol option for testing the CD-6B.

7.4 Field Calibration

If automated background calibration is disabled, a periodic manual field calibration will be required. The CD-6B has a top-level menu “CAL” that can be used to perform a field calibration.
NOTE: The “CAL” menu is not available when “Abc” is turned “On”.

7.4.1 Field Calibration Procedure

For optimum calibration results the unit should be in clean air and be in a low ambient air flow.

To perform a field calibration,

1. Remove the Philips screw on the front of the CD-6B. Remove the front cover.
2. Open the Field Calibration Kit. Connect the 400-ppm carbon dioxide gas cylinder to the regulator.
3. Check the pressure gauge on the regulator. If you have 25-psi or less, you will need to replace the gas canister. Check the expiration date on the cylinder, if it has passed the expiration date the cylinder should be replaced.
4. Assemble regulator, hose, and Calibration Hood and place the hood over the CO2 sensor.
5. Turn on the regulator to start the gas flow and wait with the gas applied continuously.
6. On the detector press the MENU/NEXT button three times to get to the “CAL” menu.
7. Press the ENTER/TEST button.
8. The display will show “tSC” (if automated background calibration “Abc” is turned OFF). Press MENU/NEXT to go to “Spn”.
9. Press ENTER/TEST.
10. Calibration starts and the following sequence will be observed:

    a. c119 and 0.04 flashing and green LED blinking, where the value after c decreases by 2 with every flash

    b. After c90 it will flash between current gas reading and c90, where the value after c decreases by 2 every

flash

c. After 2 minutes, the display will count down showing “CAL7”, “CAL6”, “CAL5”, “CAL4”, “CAL3”, “CAL2”, “CAL1”.

d. The display will show “PASS” alternating with “0.04” after successful field calibration.

e. Green LED flashes for another 1 minute.

f. When green LED is solid, the LED display also goes back to normal displaying the current gas reading.

11. If the calibration fails, the display will flash between “gas reading” and “FAil” for 30 seconds.

    NOTE: The “bad calibration” error code will only be cleared by a successful calibration of the sensor.

    If calibration failure occurs, check the pressure gauge on the regulator. If the pressure is less than 25 psi, the flow of gas may not be adequate to properly calibrate the unit. If there is proper pressure in the cylinder repeat steps 5 through 12. If the unit fails to calibrate twice contact Technical Support: 1-844-325-3050.

    NOTE: It is critical to confirm 400ppm CO2 gas is used for calibration.
12. Once the calibration has passed, remove gas and disassemble the cylinder and regulator.
13. Re-assemble the CD-6B (make sure the LED is aligned with the front case hole).
14. See Calibration Flowchart on the inside of the housing, or section 9.5 CAL Menu.

7.4.2 Time Since Calibration

The CD-6B records the length of time since the last calibration.
NOTE: Time since calibration “tSC” is visible only when the “Abc” option in the configuration menu (see section 4.8.15) is set to “OFF”.

To view the time since calibration,

1. Press MENU/NEXT three times to get to the “CAL” menu.
2. Press ENTER/TEST.
3. The display will show “tSC” (only if automated background calibration “Abc” is turned OFF). Press ENTER/TEST.
4. The display will show the time since calibration. The value is displayed in the format Y.MM where “Y” is number of years and “MM” is number of months. For example, 1 year and 6 months will be displayed “1.06”.
5. Press ENTER/TEST to return to the “CAL” menu.

Appendix A – Table of Figures

Figure 3-2 CD-6B Rear View ……... 8
Figure 3-3 CD-6B Typical Installation wiring diagram …… 9
Figure 3-4 CD-6B Typical Installation Layout …….. 9
Figure 3-5 CD-6B Multiple Device diagram …… 10
Figure 3-6 CD-6B Alarm Control Panel diagram ……. 10
Figure 3-7 CD-6B Alternate Alarm Panel ……..11
Figure 3-8 CD-6B Horn & Strobe Combo Wiring …… 11
Table 4-1 Default settings …….. 15
Figure 4-1 Board View ……16
Table 5-1 ”t” Error Code Descriptions …….. 22
Table 5-2 – Decimal to Hexadecimal conversion ……..23
Figure 7-1 CD-6B Calibration Connection ……..27

Appendix B – Menu Structure

9.1 Main Menu

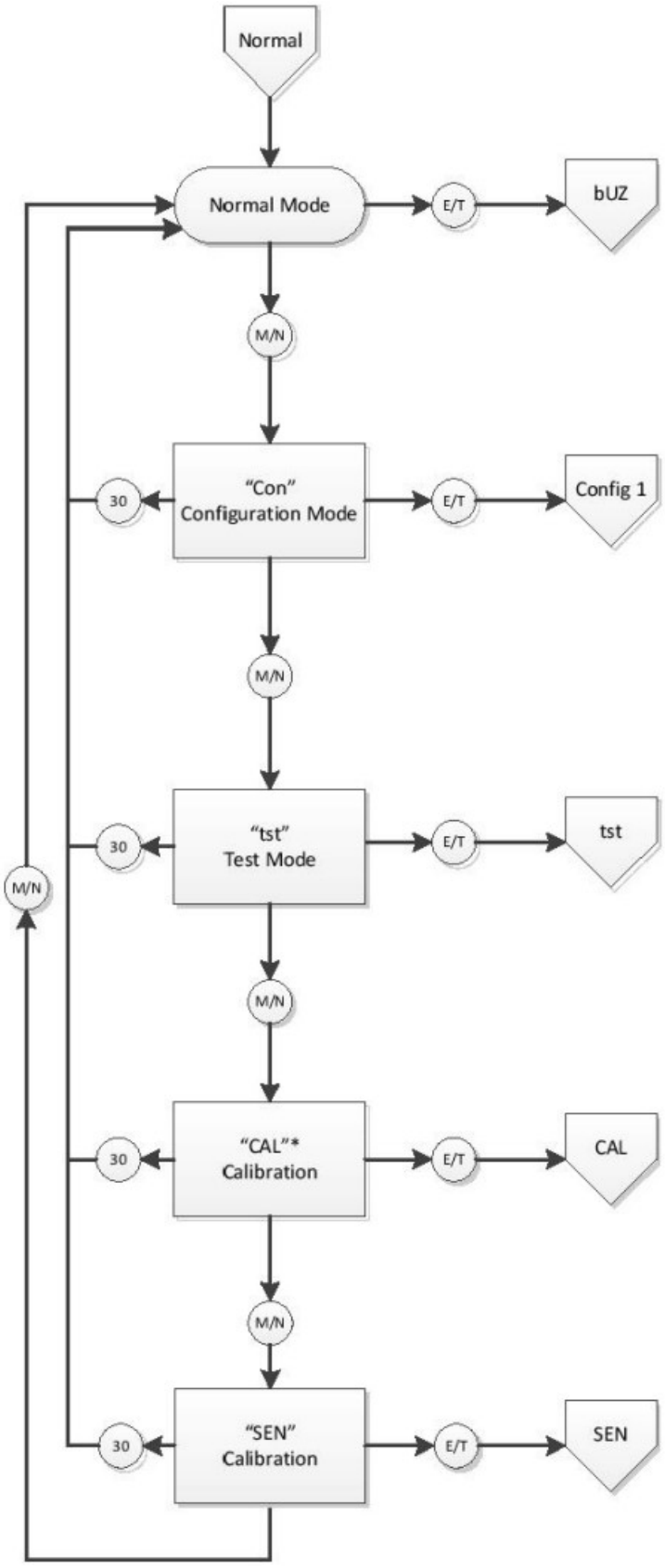

NOTES:

1. Sensor settings are in the sensor settings spreadsheet. Any settings here are examples only.
2. RED indicates where changes are made to the configuration.
3. Quotation marks are what is shown on the display. When there are two strings within quotation marks separated by a slash (e.g. " /_On") this indicates display alternating between the strings.

Menu/Next Button

Enter/Test Button

Wait for 30 seconds

Wait for xx secods

9.2 Auto Test “bUZ” Menu

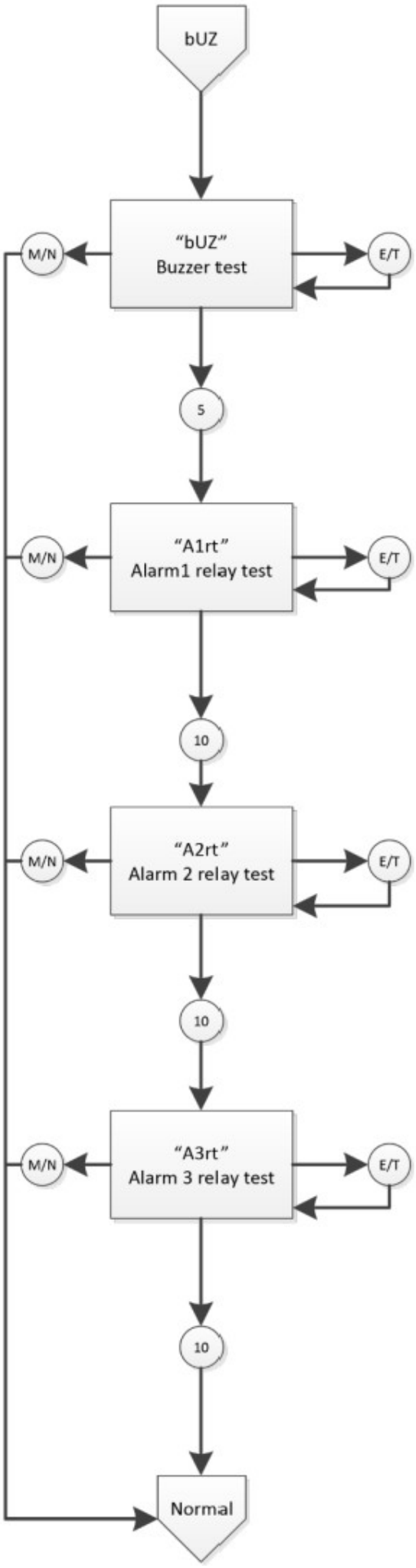
bUZ
"bUZ"
Buzzer test
M/N
E/T
5
"A1rt"
Alarm1 relay test
M/N
E/T
10
"A2rt"
Alarm 2 relay test
M/N
E/T
10
"A3rt"
Alarm 3 relay test
M/N
E/T
10
Normal

9.3 Configuration “CON” Menu

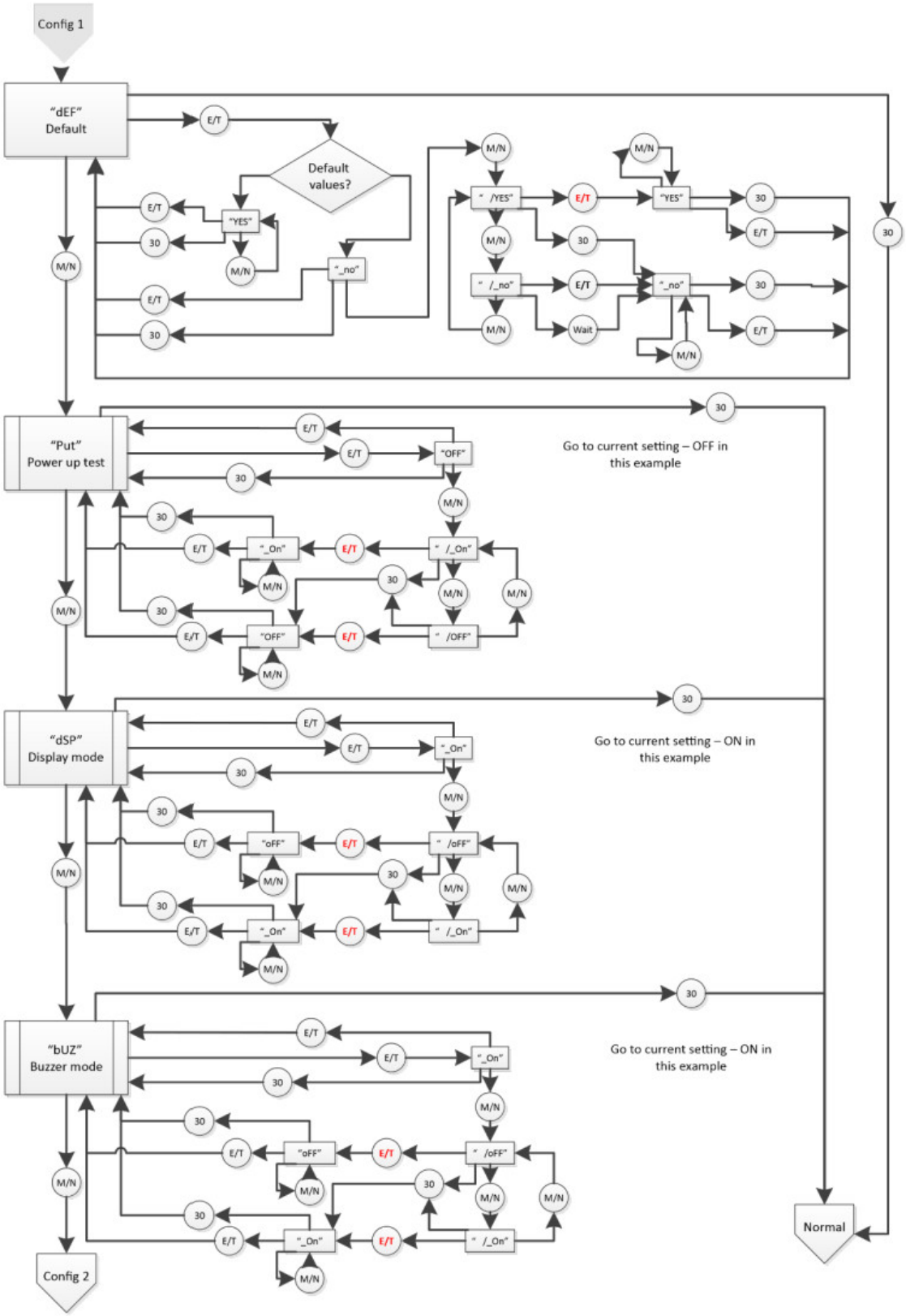

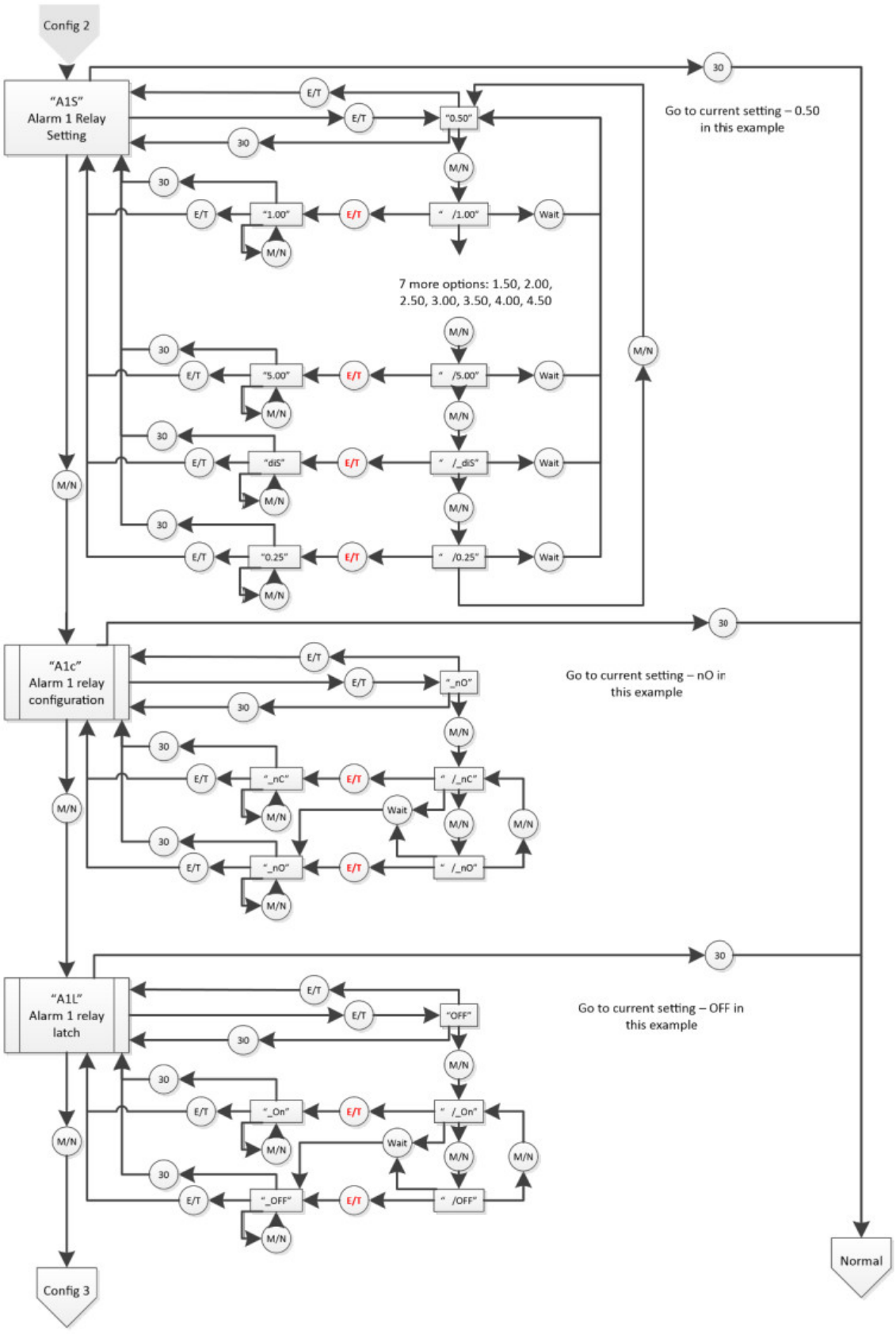
Config 2
"A1S"
Alarm 1 Relay
Setting
E/T
30
M/N
"0.50"
Go to current setting – 0.50
in this example
"1.00"
" /1.00"
Wait
7 more options: 1.50, 2.00,
2.50, 3.00, 3.50, 4.00, 4.50
"5.00"
" /5.00"
"diS"
" /_diS"
"0.25"
" /0.25"
"A1c"
Alarm 1 relay
configuration
"_nO"
"_nC"
" /_nC"
" /_nO"
Go to current setting – nO in
this example
"A1L"
Alarm 1 relay
latch
"OFF"
"_On"
" /_On"
"_OFF"
" /OFF"
Go to current setting – OFF in
this example
Config 3
Normal

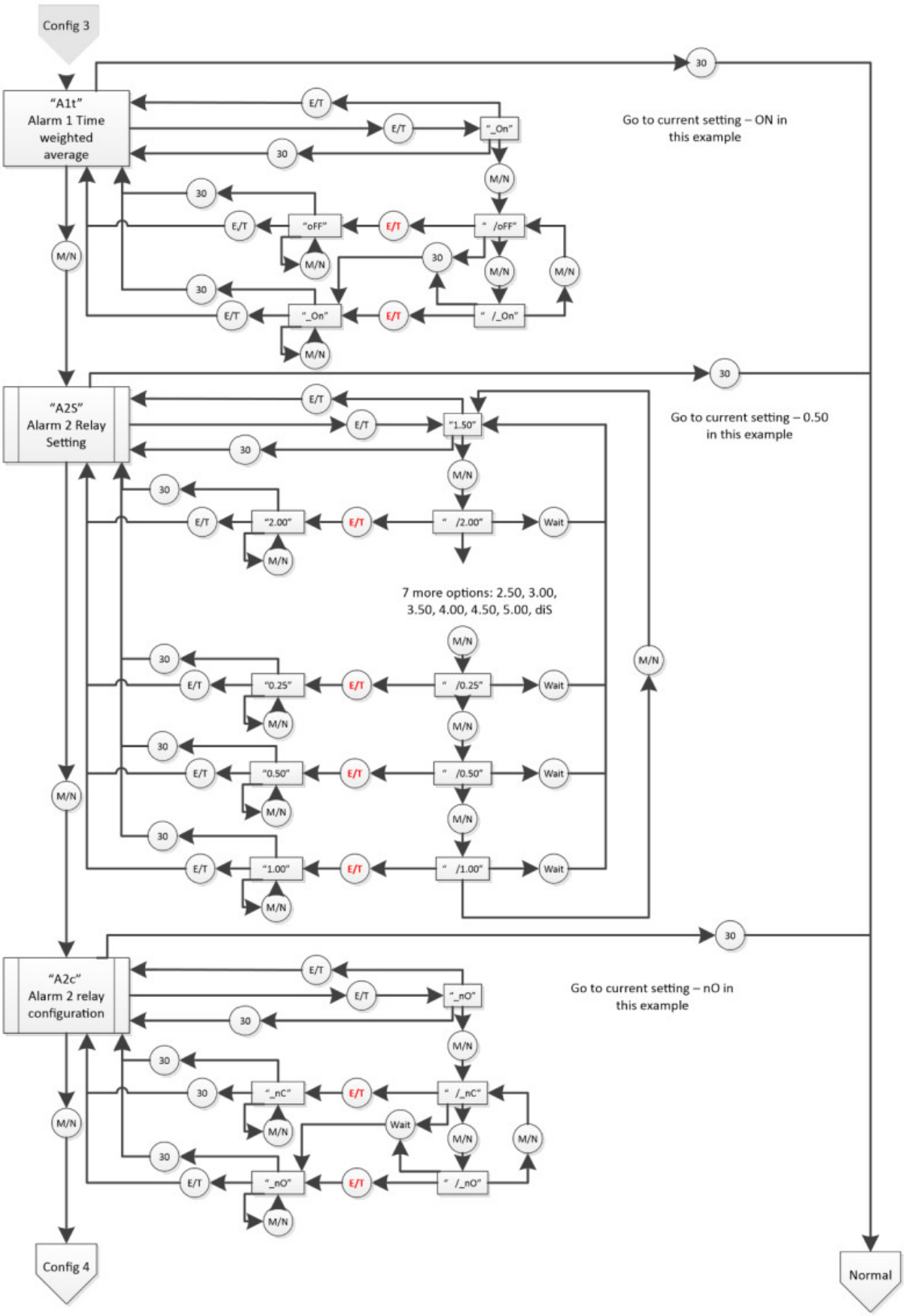
Config 3
"A1t"
Alarm 1 Time weighted average
Go to current setting – ON in this example
"A2S"
Alarm 2 Relay Setting
Go to current setting – 0.50 in this example
7 more options: 2.50, 3.00, 3.50, 4.00, 4.50, 5.00, diS
"A2c"
Alarm 2 relay configuration
Go to current setting – nO in this example
Config 4
Normal
E/T
M/N
30
Wait

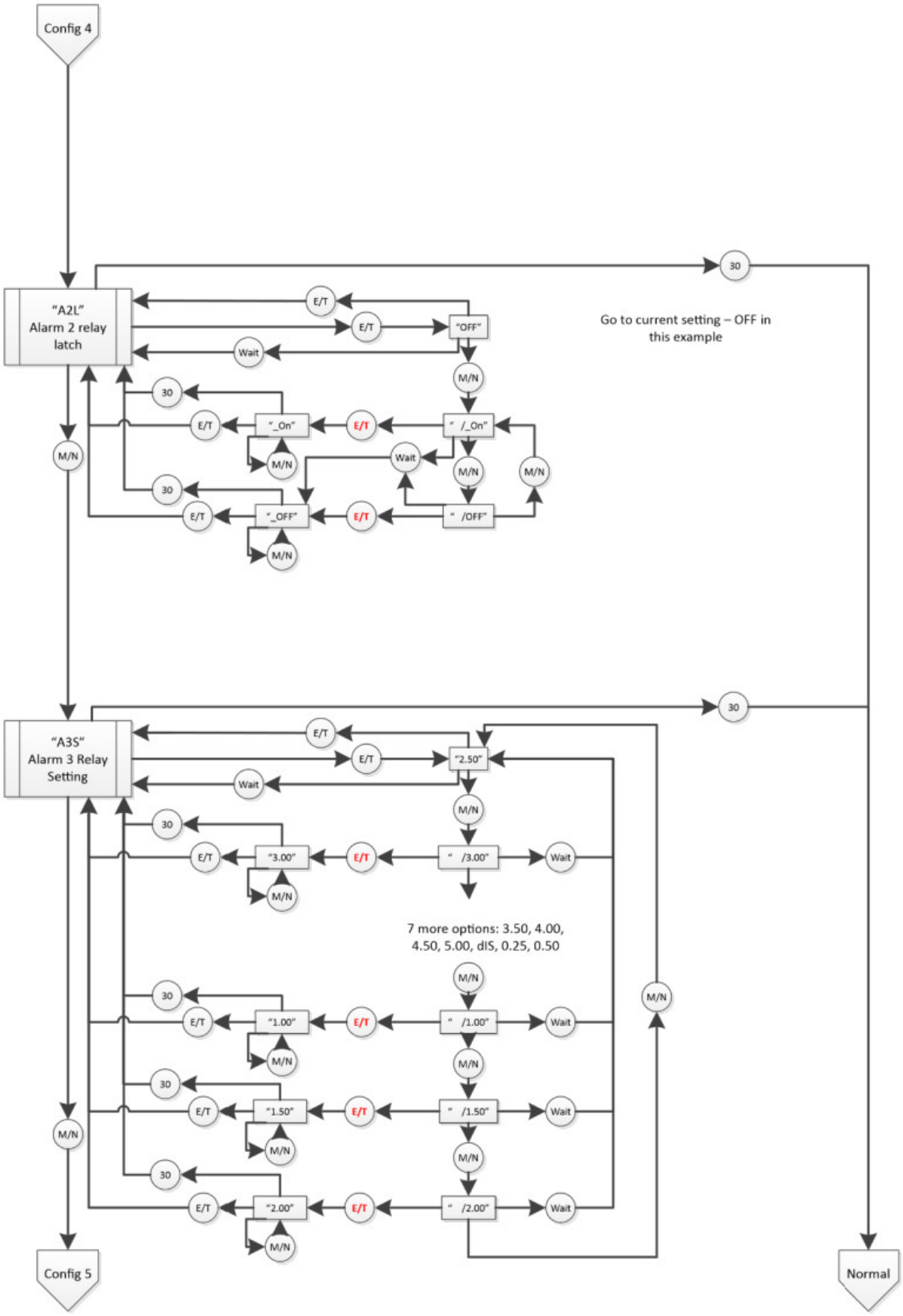
Config 4
"A2L"
Alarm 2 relay
latch
30
E/T
"OFF"
Wait
M/N
Go to current setting – OFF in
this example
"_On"
" /_On"
"_OFF"
" /OFF"
"A3S"
Alarm 3 Relay
Setting
"2.50"
"3.00"
" /3.00"
7 more options: 3.50, 4.00,
4.50, 5.00, dIS, 0.25, 0.50
"1.00"
" /1.00"
"1.50"
" /1.50"
"2.00"
" /2.00"
Config 5
Normal

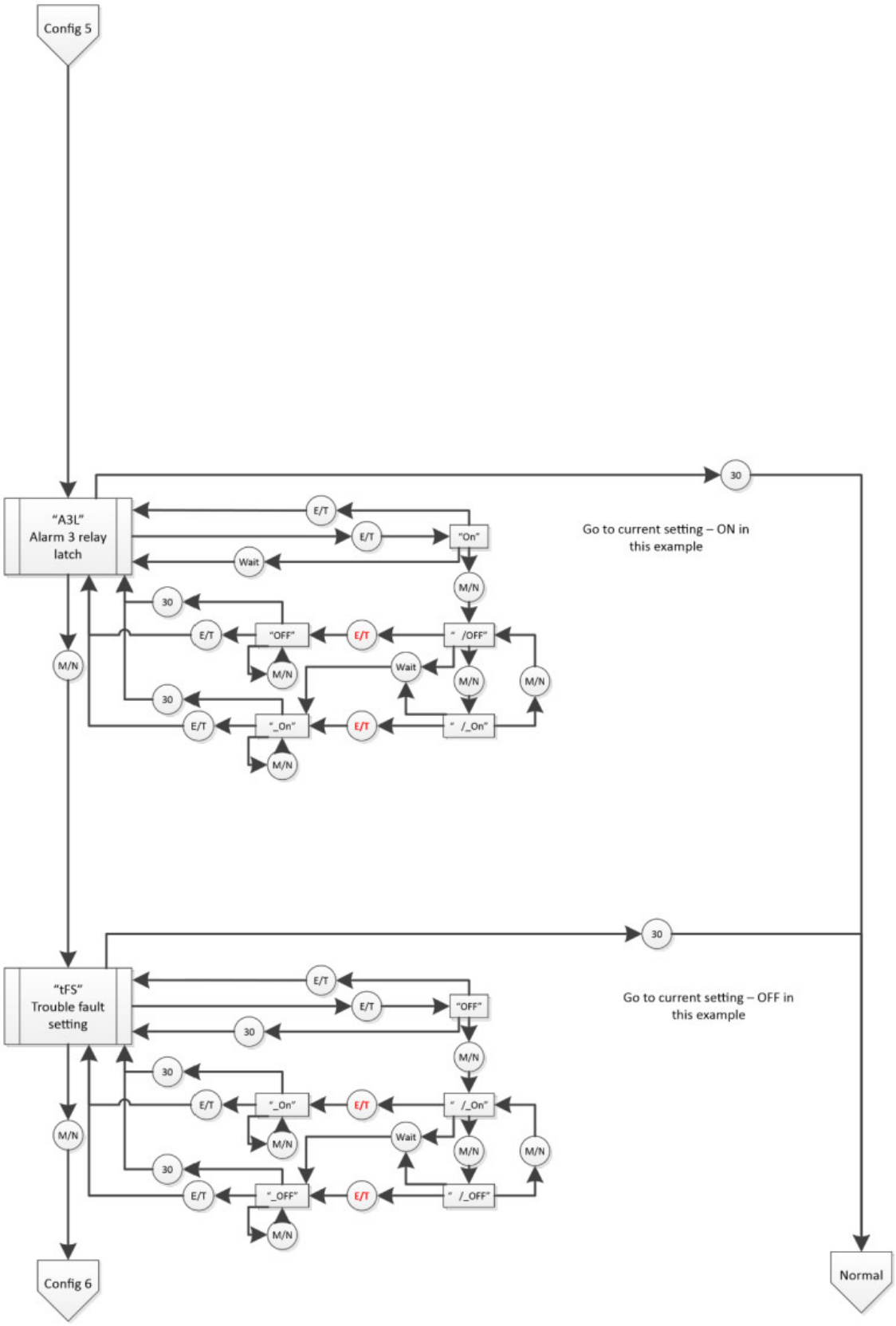
Config 5
"A3L"
Alarm 3 relay
latch
E/T
E/T
"On"
Wait
M/N
30
E/T
"OFF"
E/T
" /OFF"
M/N
Wait
M/N
M/N
30
E/T
"_On"
E/T
" /_On"
M/N
30
Go to current setting – ON in
this example
"tFS"
Trouble fault
setting
E/T
E/T
"OFF"
30
M/N
30
E/T
"_On"
E/T
" /_On"
M/N
Wait
M/N
M/N
30
E/T
"_OFF"
E/T
" /_OFF"
M/N
30
Go to current setting – OFF in
this example
Config 6
Normal

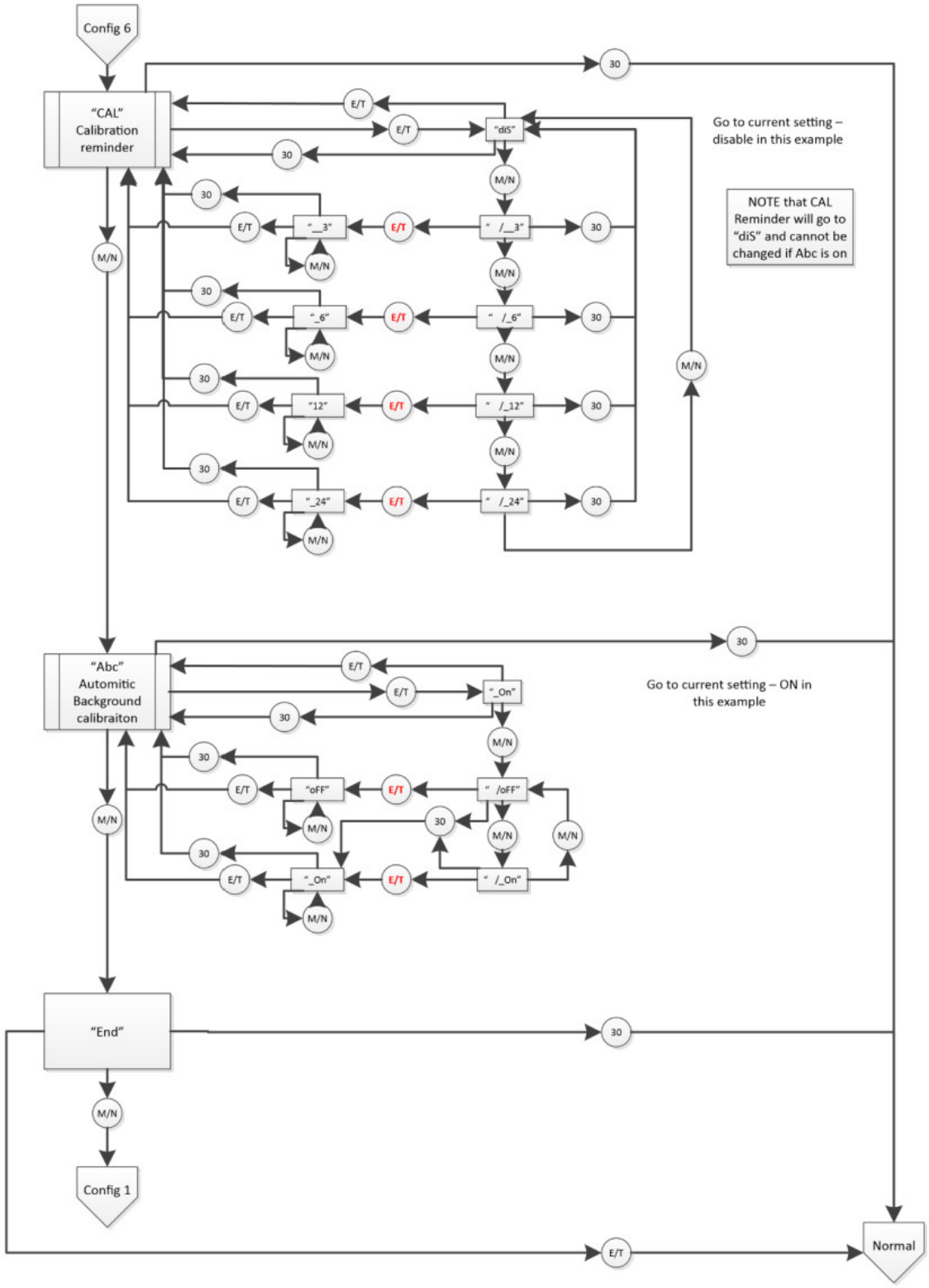

9.4 Select Test "tst" Menu

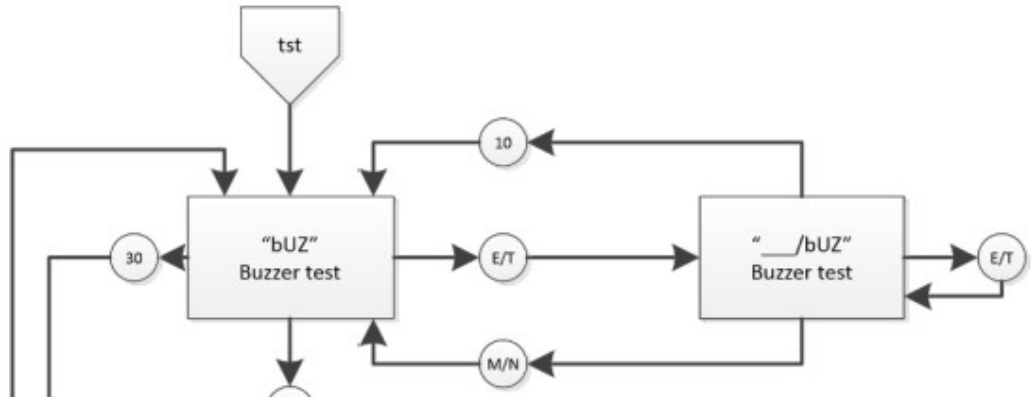

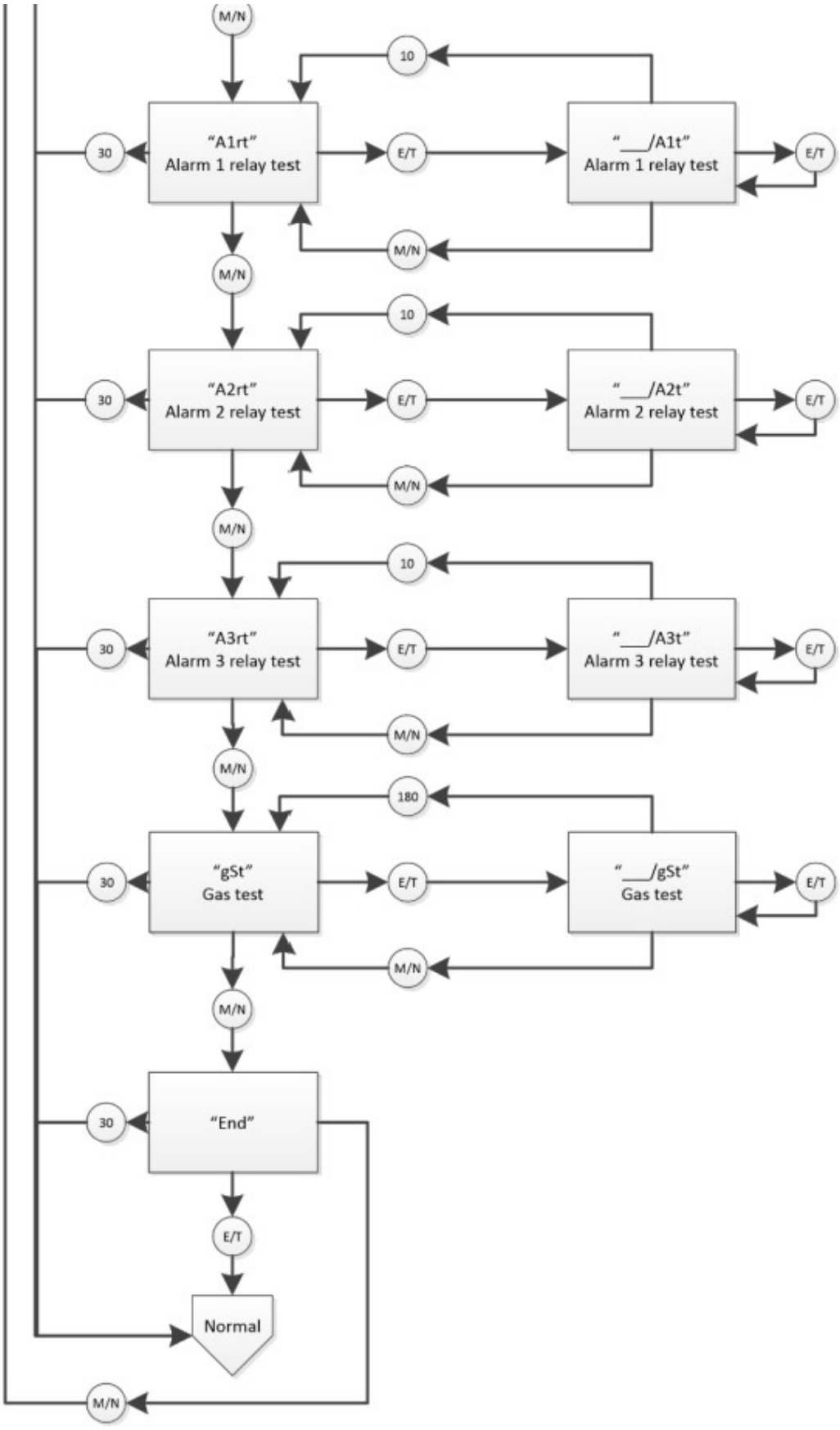

9.5 Calibration "CAL" Menu

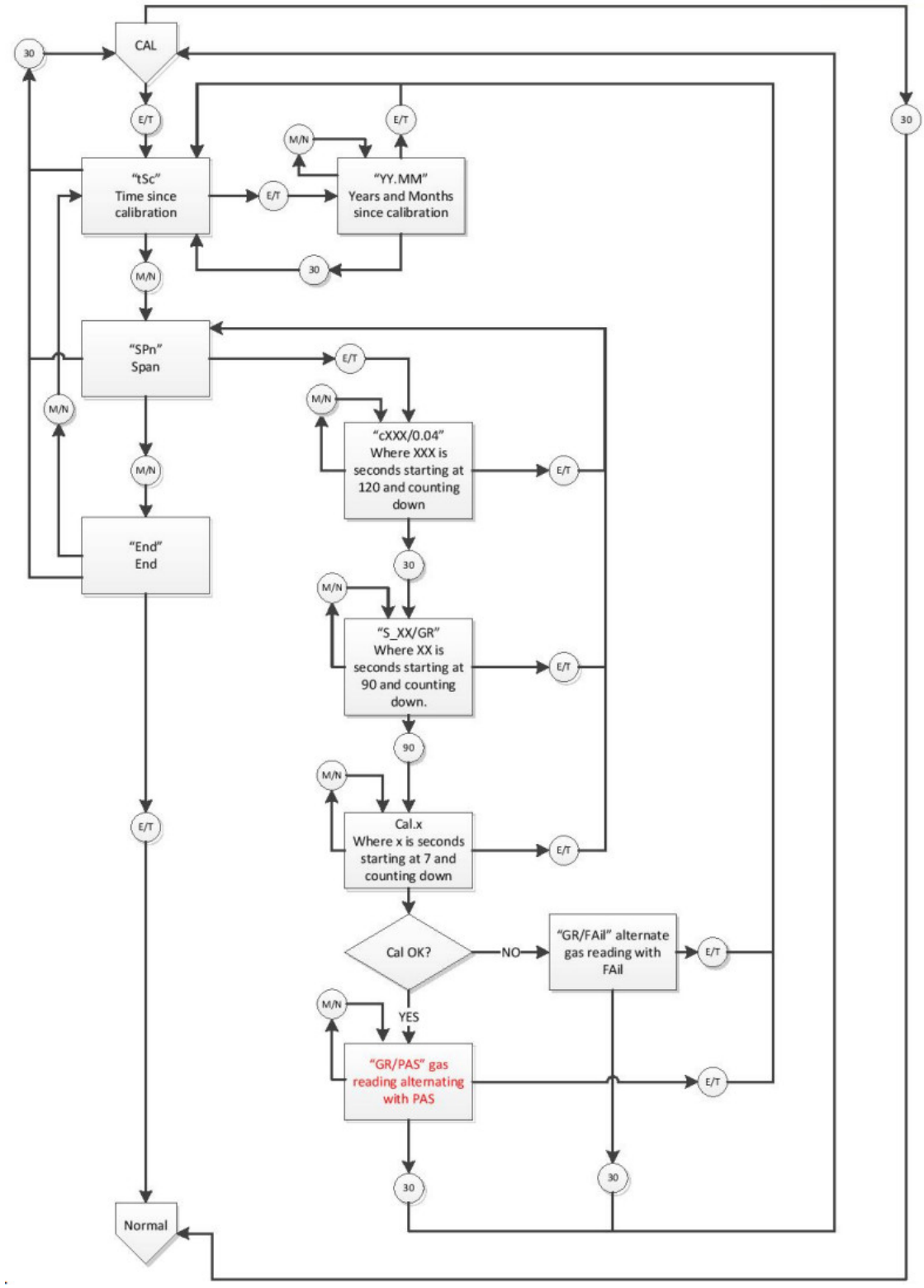

9.6 Sensor Reset "SEN" Menu

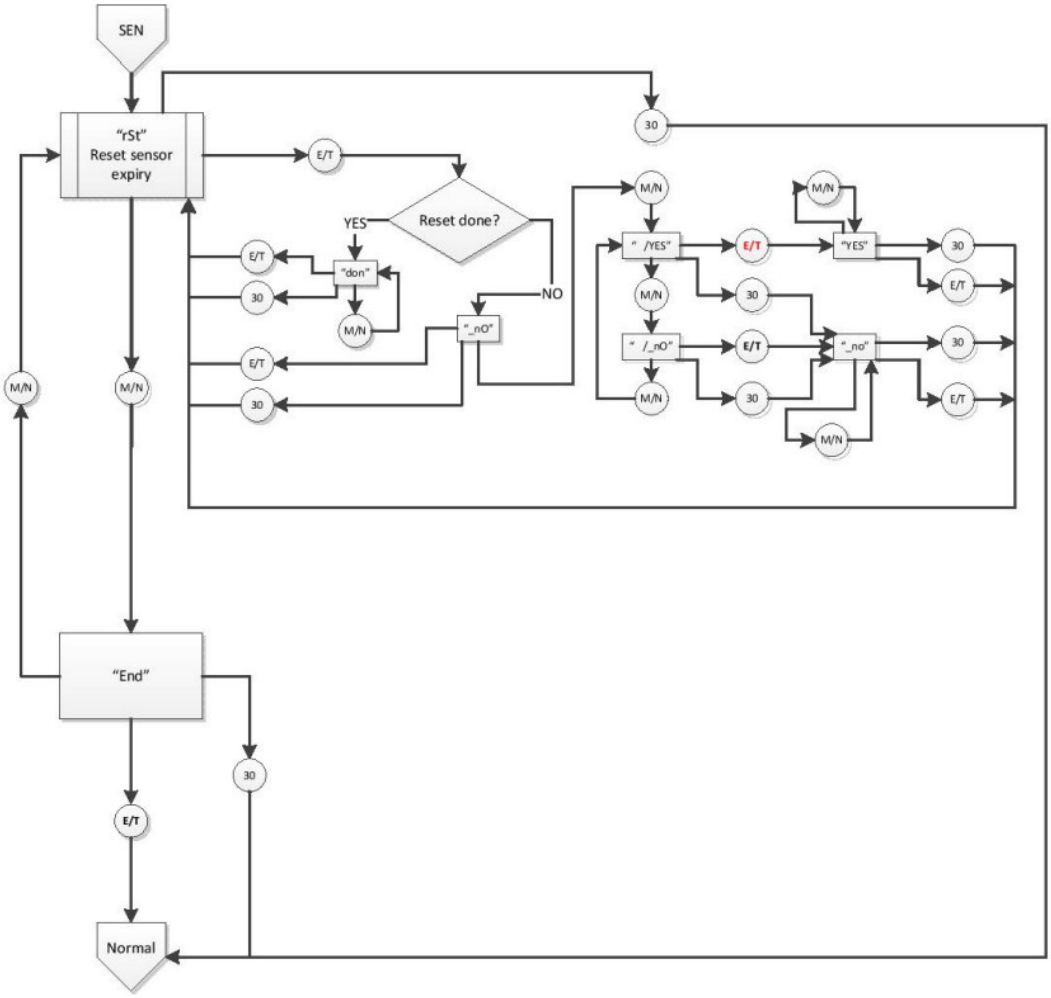

Macurco Gas Detection Product limited warranty

Macurco warrants the CD-6B gas detector will be free from defective materials and workmanship for a period of two (2) years from the date of manufacture (indicated on inside cover of the CD-6B), provided it is maintained and used in accordance with Macurco instructions and/or recommendations. If any component becomes defective during the warranty period, it will be replaced or repaired free of charge, if the unit is returned in accordance with the instructions below. This warranty does not apply to units that have been altered or had repair attempted, or that have been subjected to abuse, accidental or otherwise. The above warranty is in lieu of all other express warranties, obligations or liabilities.

THE IMPLIED WARRANTIES OF MERCHANTABILITY AND FITNESS FOR PARTICULAR PURPOSE ARE LIMITED TO A PERIOD OF TWO (2) YEARS FROM THE PURCHASE DATE.

Macurco shall not be liable for any incidental or consequential damages for breach of this or any other warranty, express or implied, arising out of or related to the use of said gas detector. The manufacturer or its agent's liability shall be limited to replacement or repair as set forth above. Buyer's sole and exclusive remedies are the return of the goods and repayment of the price, or repair and replacement of non-conforming goods or parts.

Macurco Inc.
1504 W 51st St
Sioux Falls, SD 57105
Technical Support Contact Information
Phone: 1-844-325-3050
Fax: 1-605-951-9616
Email: support@macurco.com
Website: www.macuco.com/support/
Rev – 1.0.1
Issue Date: 01.18.2023
Document No: 34-2900-0513-0
© Macurco 2023. All rights reserved.

General Contact Information
Phone : 1-877-367-7891
Fax : 1-605-951-9616
Email : info@macurco.com
Website: www.macurco.com

https://qr.page/g/IM8cOImgvz

REV – 1.0.1
[34-2900-0513-0] www.macurco.com
1-877-367-7891
info@macurco.com
1504 W 51st.
Sioux Falls, SD 57105

Documents / Resources

	MACURCO CD-6B Carbon Dioxide Detector and Controller [pdf] Instruction Manual CD-6B Carbon Dioxide Detector and Controller, CD-6B, Carbon Dioxide Detector and Controller, Dioxide Detector and Controller, Detector and Controller, Controller

References

- macuco.com/support/
- Homepage - Macurco Inc. Macurco Gas Detection
- Homepage - Macurco Inc. Macurco Gas Detection
- User Manual

Manuals+.