OPERATOR'S MANUAL

MODEL #200990
4500W WIRELESS REMOTE START INVERTER GENERATOR

REGISTER YOUR PRODUCT ONLINE

at **championpowerequipment.com**

TAKE IT OUTSIDE™

TAKEYOURGENERATOROUTSIDE.COM

1·877·338·0999

or visit **championpowerequipment.com**

SAVE THESE INSTRUCTIONS. This manual contains important safety precautions which should be read and understood before operating the product. Failure to do so could result in serious injury. This manual should remain with the product.

Specifications, descriptions and illustrations in this manual are as accurate as known at the time of publication, but are subject to change without notice.

This product meets the requirements of the PGMA (Portable Generator Manufacturers' Association) standard ANSI/PGMA G300-2015 (Safety and Performance of Portable Generators).

REV 20210324

Champion Power Equipment, Inc., Santa Fe Springs, CA USA

TAKE IT OUTSIDE™

CARBON MONOXIDE KILLS

CARBON MONOXIDE SAFETY: THE BIG PICTURE

As the only safe way to use a portable generator, taking your generator outside is absolutely mandatory to keep your family safe from carbon monoxide. But there's even more you can do. By educating yourself about all carbon monoxide risks, you'll be better prepared to protect your family from this colorless, oderless threat.

ALWAYS READ THE OPERATOR'S MANUAL FIRST

KNOW THE SYMPTOMS

- Headache
- Nausea
- Shortness of breath
- Dizziness
- Fatigue

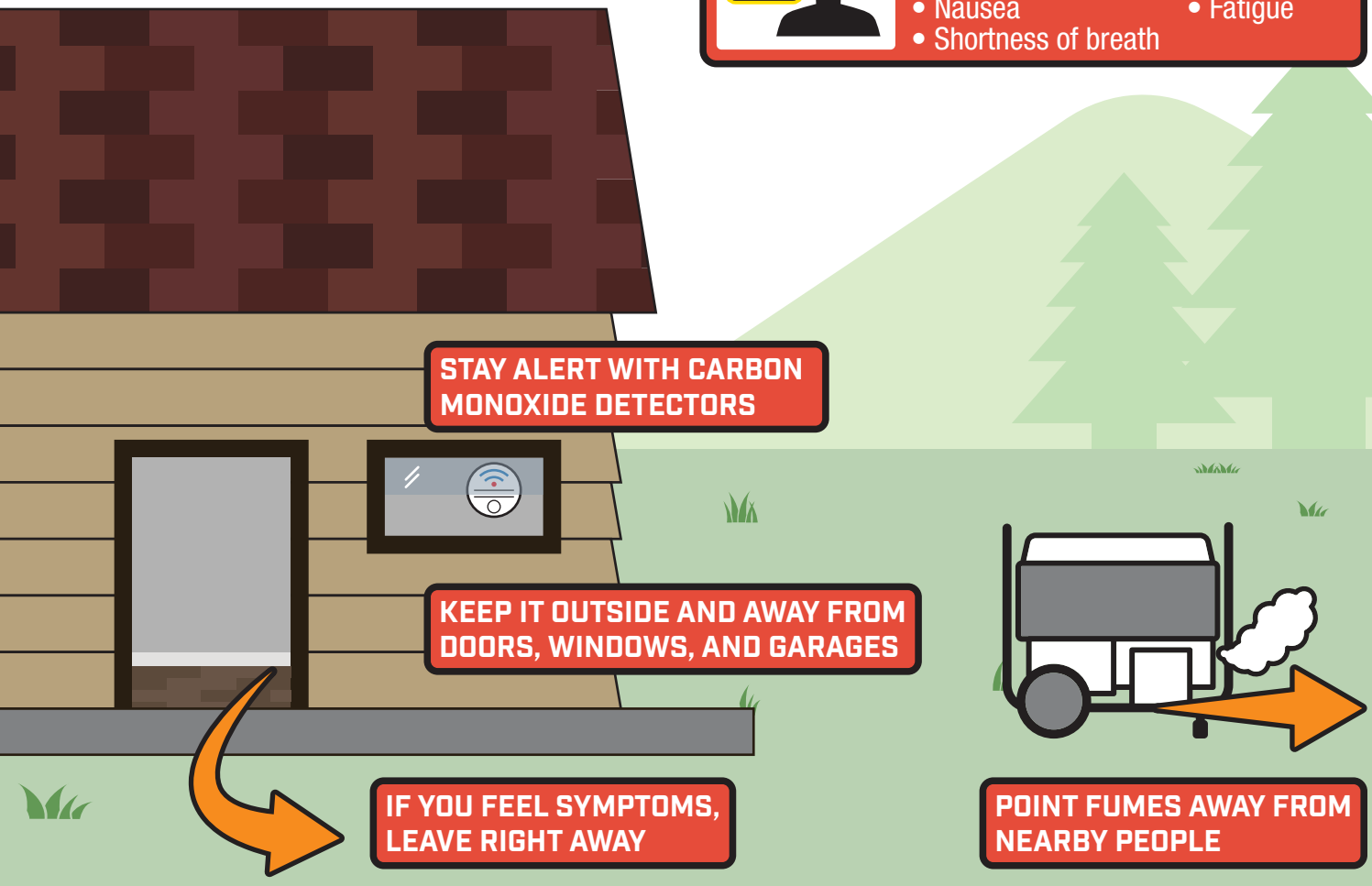

www.TakeYourGeneratorOutside.com

TABLE OF CONTENTS

Introduction **4**

Safety Definitions **4**

Important Safety Instructions **5**

Fuel Safety 7
Lithium-ion Battery Safety 8
Safety and Dataplate Labels 9
Safety Symbols 10
Operation Symbols 12
Quick Start Label Symbols 13

Controls and Features **14**

Generator 14
Control Panel 15
Intelligauge with Power Meter 16
Wireless Remote Control 17
FCC Statement for Remote Control Device 17
Parts Included 18

Assembly **19**

Unpacking 19
Remove Shipping Support Hardware 19
Connect the Battery 19
Add Engine Oil 19
Add Fuel 20
Grounding 22

Operation **22**

Generator Location 22
Surge Protection 23
Wireless Set Button 23
Starting the Engine 24
Manual Choke Start 26
Connecting Electrical Loads 27
Do Not Overload Generator 27
Eco (Economy) Mode 28
Parallel Operation 28
Stopping the Engine 28
Moving the Generator 29
Operation at High Altitude 30

Maintenance **30**

Cleaning the Generator 30
Changing the Engine Oil 31
Cleaning and Adjusting the Spark Plug 31
Cleaning the Air Filter 31
Cleaning the Spark Arrestor 32
Generator Battery 32
Remote Key Fob Battery 33
Adjusting the Governor 33
Maintenance Schedule 33

Storage **34**

Short Term Storage (up to 30 days) 34
Mid Term Storage (30 days – 1 year) 34
Long Term Storage (more than 1 year) 34
Removing from Storage 35

Specifications **36**

Generator Specifications 36
Engine Specifications 36
Oil Specifications 36
Fuel Specifications 36
Battery Specifications 36
Temperature Specifications 36

Troubleshooting **37**

Warranty* **39**

Warranty Qualifications 39
Repair/Replacement Warranty 39
Do Not Return The Unit To The Place Of Purchase 39
Warranty Exclusions 39
Other Exclusions 39
Limits of Implied Warranty and Consequential Damage 39
Contact Information 39

INTRODUCTION

Congratulations on your purchase of a Champion Power Equipment (CPE) product. CPE designs, builds, and supports all of our products to strict specifications and guidelines. With proper product knowledge, safe use, and regular maintenance, this product should bring years of satisfying service.

Every effort has been made to ensure the accuracy and completeness of the information in this manual at the time of publication, and we reserve the right to change, alter and/or improve the product and this document at any time without prior notice.

CPE highly values how our products are designed, manufactured, operated, and serviced as well as providing safety to the operator and those around the generator. Therefore, it is IMPORTANT to review this product manual and other product materials thoroughly and be fully aware and knowledgeable of the assembly, operation, dangers and maintenance of the product before use. Fully familiarize yourself, and make sure others who plan on operating the product fully familiarize themselves too, with the proper safety and operation procedures before each use. Please always exercise common sense and always err on the side of caution when operating the product to ensure no accident, property damage, or injury occurs. We want you to continue to use and be satisfied with your CPE product for years to come.

When contacting CPE about parts and/or service, you will need to supply the complete model and serial numbers of your product. Transcribe the information found on your product's nameplate label to the table below

CPE TECHNICAL SUPPORT TEAM
1-877-338-0999
MODEL NUMBER
200990
SERIAL NUMBER
DATE OF PURCHASE
PURCHASE LOCATION

SAFETY DEFINITIONS

The purpose of safety symbols is to attract your attention to possible dangers. The safety symbols, and their explanations, deserve your careful attention and understanding. The safety warnings do not by themselves eliminate any danger. The instructions or warnings they give are not substitutes for proper accident prevention measures.

⚠ DANGER

DANGER indicates a hazardous situation which, if not avoided, will result in death or serious injury.

⚠ WARNING

WARNING indicates a hazardous situation which, if not avoided, could result in death or serious injury.

⚠ CAUTION

CAUTION indicates a hazardous situation which, if not avoided, could result in minor or moderate injury.

NOTICE

NOTICE indicates information considered important, but not hazard-related (e.g., messages relating to property damage).

IMPORTANT SAFETY INSTRUCTIONS

⚠ WARNING

Cancer and Reproductive Harm – www.P65Warnings.ca.gov

⚠ DANGER

Generator exhaust contains carbon monoxide, a colorless, odorless, poisonous gas. Breathing carbon monoxide will cause nausea, dizziness, fainting or death. If you start to feel dizzy or weak, get to fresh air immediately.

OPERATE GENERATOR OUTDOORS ONLY IN A WELL VENTILATED AREA AND POINT EXHAUST AWAY.

DO NOT operate the generator inside any building, including garages, basements, crawlspaces and sheds, enclosure or compartment, including the generator compartment of a recreational vehicle.

DO NOT allow exhaust fumes to enter a confined area through windows, doors, vents or other openings.

⚠ DANGER

Using a generator indoors **CAN KILL YOU IN MINUTES**. Generator exhaust contains carbon monoxide. This is a poison you cannot see or smell.

NEVER use inside a home or garage, **EVEN IF** doors and windows are open.

ONLY use **OUTSIDE** and far away from windows, doors, and vents.

Install battery-operated carbon monoxide alarms or plug-in carbon monoxide alarms with battery back-up according to the manufacturer's instructions.

⚠ WARNING

Although the generator contains a spark arrester, maintain a minimum distance of 5 ft. (1.5 m) from dry vegetation to prevent fires.

⚠ DANGER

Operate equipment with guards in place.

Rotating parts can entangle hands, feet, hair, clothing and/or accessories. Traumatic amputation or severe laceration can result.

Keep hands and feet away from rotating parts.

Tie up long hair and remove jewelry.

DO NOT wear loose-fitting clothing, dangling drawstrings or items that could become caught.

⚠ DANGER

Generator produces powerful voltage.

DO NOT touch bare wires or receptacles.

DO NOT use electrical cords that are worn, damaged or frayed. Use only Champion electrical cords for proper application.

DO NOT operate generator in wet weather.

DO NOT allow children or unqualified persons to operate or service the generator.

Use a ground fault circuit interrupter (GFCI) in damp areas and areas containing conductive material such as metal decking.

Connection to your home's electrical system requires a listed 30A transfer switch installed by a licensed electrician and approved by the local authority having jurisdiction. The connection must isolate the generator from the utility power and must comply with all applicable laws and electrical codes.

⚠ WARNING

Do not use generator for medical and life support uses.

In case of emergency, call 911 immediately.

NEVER use this product to power life support devices or life support appliances.

NEVER use this product to power medical devices or medical appliances.

Inform your electricity provider immediately if you or anyone in your household depends on electrical equipment to live.

Inform your electrical provider immediately if a loss of power would cause you or anyone in your household to experience a medical emergency.

⚠ WARNING

Spark from removed spark plug wire can result in fire or electrical shock.

When servicing the generator:

Disconnect the spark plug wire and place it where it cannot contact the plug or any other metal object.

DO NOT check for spark with the plug removed.

Use only approved spark plug testers.

⚠ WARNING

Running engines produce heat. Severe burns can occur on contact. Combustible material can catch fire on contact.

DO NOT touch hot surfaces.

Avoid contact with hot exhaust gases.

Allow equipment to cool before touching.

Maintain at least 3 ft. (91.4 cm) of clearance on all sides to ensure adequate cooling.

Maintain at least 5 ft. (1.5 m) of clearance from combustible materials.

⚠ WARNING

Rapid retraction of the recoil cord will pull hand and arm towards the engine faster than you can let go. Broken bones, fractures, bruises or sprains could result. Unintentional startup can result in entanglement, traumatic amputation or laceration.

When starting engine, pull the recoil cord slowly until resistance is felt and then pull rapidly to avoid kickback.

DO NOT start or stop the engine with electrical devices plugged in and turned on.

⚠ CAUTION

Exceeding the generator's running capacity can damage the generator and/or electrical devices connected to it.

DO NOT overload the generator.

DO NOT tamper with the governed speed.

DO NOT modify the generator in any way.

⚠ CAUTION

Improper treatment or use of the generator can damage it, shorten its life or void the warranty.

Use the generator only for intended uses.

Operate only on level surfaces.

DO NOT expose generator to excessive moisture, dust, or dirt.

DO NOT allow any material to block the cooling slots.

If connected devices overheat, turn them off and disconnect them from the generator.

DO NOT use the generator if:

- Electrical output is lost
- Equipment sparks, smokes or emits flames
- Equipment vibrates excessively

⚠ WARNING

This product contains a button battery within the remote key fob. If swallowed, it could cause severe injury or death in just 2 hours. Seek medical attention immediately.

Fuel Safety

⚠ DANGER

GASOLINE AND GASOLINE VAPORS ARE HIGHLY FLAMMABLE AND EXPLOSIVE.

Fire or explosion can cause severe burns or death.

Gasoline and gasoline vapors:

- Gasoline is highly flammable and explosive.
- Gasoline can cause a fire or explosion if ignited.
- Gasoline is a liquid fuel but it's vapors can ignite.
- Gasoline is a skin irritant and needs to be cleaned up immediately if spilled on skin or clothes.
- Gasoline has a distinctive odor, this will help detect potential leaks quickly.
- Gasoline expands or contracts with ambient temperatures. Never fill the gasoline tank to full capacity, as gasoline needs room to expand when temperatures rise.
- In the case of any petroleum gasoline fire, flames should never be extinguished unless the fuel supply valve can be turned OFF. By not doing so, if a fire is extinguished and the supply of fuel is not turned OFF, an explosion hazard could be created.

When adding or removing gasoline:

DO NOT light or smoke cigarettes.

Turn the generator off and let cool for at least two minutes before removing the gasoline cap. Always loosen the cap slowly to relieve pressure in the tank.

Only fill or drain gasoline outdoors in a well-ventilated area.

DO NOT pump gasoline directly into the generator at the gas station. Always use an approved container to transfer the fuel to the generator.

DO NOT overfill the gasoline tank.

Always keep gasoline away from sparks, open flames, pilot lights, heat and other sources of ignition.

When starting the generator:

DO NOT attempt to start a damaged generator.

Always check that the gasoline cap, air filter, spark plug, fuel lines and exhaust system are properly in place.

Always allow spilled gasoline to evaporate fully before attempting to start the engine.

Always be certain that the generator is resting firmly on level ground.

When operating the generator:

DO NOT move or tip the generator during operation.

When transporting or servicing the generator:

Always check that the fuel valve is in the OFF position and the gasoline tank is empty.

For LPG compatible models, check that the LPG cylinder is disconnected and stored securely away from the generator.

Disconnect the spark plug wire.

When storing the generator:

Store away from sparks, open flames, pilot lights, heat and other sources of ignition.

Do not store generator, gasoline or LPG cylinders near furnaces, water heaters, or any other appliances that produce heat or have automatic ignitions.

⚠ DANGER

NEVER place a gasoline container, gasoline tank, LPG cylinder or any combustible material in the path of the exhaust stream during operation of the engine.

⚠ WARNING

Never use a gasoline container, gasoline tank, or any other fuel item that is broken, cut, torn or damaged.

Lithium-ion Battery Safety

Electrolyte inside the battery is harmful to skin and eyes. If the battery leaks and electrolyte gets in your eyes, do not rub them. Instead, rinse them with clean running water and immediately seek medical attention. If left untreated, electrolyte can cause permanent eye injury.

When using the generator:

- Do not use the battery near sources of high heat or fire.
- Do not reverse or short-circuit the positive (+) or negative (-) terminals.
- Do not use the battery in parallel or in series.
- Do not discharge battery in temperatures below 14°F (-10°C) or above 104°F (40°C).

When charging the battery:

- Do not charge the battery with voltage over 15.0V and current over 1.6A.
- Do not charge the battery below 32°F (0°C) or above 113°F (45°C).
- Always remove from the battery cradle before charging separately.
- After charging, leave the battery sitting for 0.5 to 1 hour before checking the voltage. If the voltage is less than 12.8V, additional charging is necessary.
- If the battery becomes hot to the touch, stop charging. Allow battery to cool before resuming.

When storing the generator/battery:

- Always check that the battery connectors between the inverter and the battery are unplugged and placed away from the battery terminals.
- Always inspect the battery case for obvious signs of physical damage or warpage.
- Do not store the battery near sources of high heat or fire.
- Store the battery in a dry, well ventilated area between -4°F (-20°C) and 104°F (40°C).
- Do not store the battery when discharged to 20% or less state of charge (SOC).
- The battery should be charged for 10~30 mins every 180 days when in storage, to keep the battery in good condition.

In case of battery damage:

- If damaged, battery may emit hazardous fumes. If fumes are present, move battery to a well-ventilated area.
- Do not try to repair the battery.
- Dispose of battery in a clear plastic bag and take to your local municipal household hazardous waste (HHW) recycling center. Do not place it the trash for any reason.

Safety and Dataplate Labels

These labels warn you of potential hazards that can cause serious injury. Read them carefully.

If a label comes off or becomes hard to read, contact Technical Support Team for possible replacement.

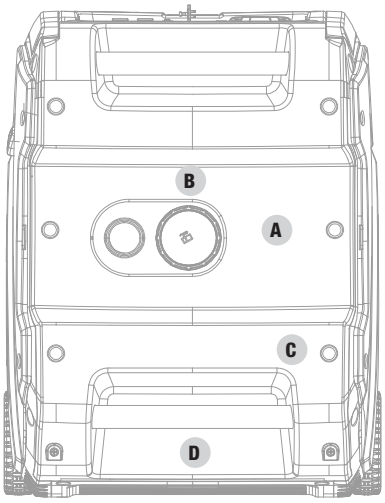

Top

	LABEL	DESCRIPTION
A		Safety Symbols/ CO Danger
B	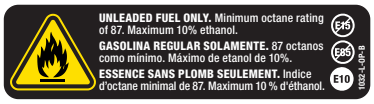	Fuel
C	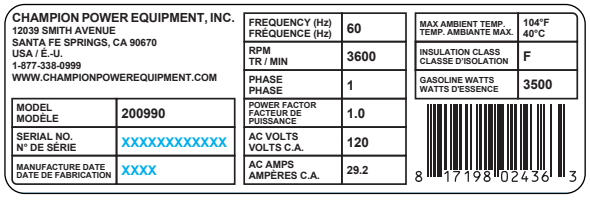	Dataplate
D		Hot Surface

Safety Symbols

Some of the following symbols may be used on this product. Please study them and learn their meaning. Proper interpretation of these symbols will allow you to more safely operate the product.

SYMBOL	MEANING
	Read Operator's Manual. To reduce the risk of injury, user must read and understand operator's manual before using this product.
	Clearance. Keep all objects at least 5 feet (1.5m) from generator. Heat from the muffler and exhaust gas can ignite combustible objects.
	Ground. Consult with local electrician to determine grounding requirements before operation.
	Electric Shock. Failure to use in dry conditions and to observe safe practices can result in electric shock. Improper connections to a building can allow current to backfeed into utility lines, creating an electrocution hazard. A transfer switch must be used when connecting to a building.
	Fire/Explosion. Fuel and its vapors are extremely flammable and explosive. Fire or explosion can cause severe burns or death. Keep generator at least 5 feet (1.5m) from all objects to prevent combustion.
	Hot Surface. To reduce the risk of injury or damage, avoid contact with any hot surface.
	Open Flame Alert. Fuel and its vapors are extremely flammable and explosive. Keep fuel away from smoking, open flames, sparks, pilot lights, heat, and other ignition sources.
	Wet Conditions Alert. Do not expose to rain or use in damp locations except as follows: If you must operate in rain or damp locations, DO NOT operate without proper protection of the electrical components. Use of a safety canopy that is fire retardant and will provide proper air ventilation for the engines exhaust stream can be used. Keep all objects a minimum of 5 feet (1.5m) away from the generator at all times. Heat from the muffler surface and exhaust stream can ignite combustible materials.

SYMBOL	MEANING
	This product uses lithium-ion (Li-ion) batteries. Local, state, or federal laws may prohibit disposal of batteries in ordinary trash. Consult your local waste authority for information regarding available recycling and/or disposal options.
	Blindness or severe burns. Electrolyte solution can cause blindness or severe burns.
	Shield eyes. Explosive gases can cause blindness or injury. If damaged, battery may emit hazardous fumes. If fumes present, move battery to a well-ventilated area.
	Eye protection. Always wear eye protection with side shields marked to comply with ANSI Z87.1.

Operation Symbols

Some of the following symbols may be used on this product. Please study them and learn their meaning. Proper interpretation of these symbols will allow you to more safely operate the product.

SYMBOL	MEANING
	Start
	On
	Stop or Off
	Choke
	Run
USB	**USB Connection Port**
5V 2.1A	**5V Direct Current**
	Battery On
	Battery Off
N	**Neutral Floating.** Neutral circuit **IS NOT** electrically connected to the frame/ground of the generator.
	Circuit Breaker Reset: Push

SYMBOL	MEANING
	RV Ready Receptacle
	Ground Terminal
	Parallel Connection(s)
ECO	**Economy Mode Button**
	Overload Reset Button
	Low Oil
	Wireless Pair
	Gasoline Tank: Full
	Gasoline Tank: Empty
	Power Output. Percentage of available power from generator being used.

Quick Start Label Symbols

Some of the following symbols may be used on this product. Please study them and learn their meaning. Proper interpretation of these symbols will allow you to more safely operate the product.

Starting the Engine

⚠ DANGER

Move generator outside and far away from windows, doors and intake ventilation covers.

1. **Check oil level.**
   Recommended oil is 10W-30.
2. **Check gasoline level.**
   When adding gasoline, use a minimum octane rating of 87 and an ethanol content of 10% or less by volume.
3. Turn battery switch to the **"ON"** position.
4. Turn the EZ Start dial to the **"ON"** position.
5. Press the choke button. **Note:** If battery is dead, charge battery or remove the non recoil side maintenance cover and move choke lever to choke position to start.
6. Pull the recoil cord.
7. Press the choke button.
8. Plug in desired device.

Stopping the Engine

1. Turn off and unplug all connected electrical loads.
2. Turn the EZ Start dial to the **"STOP"** position.
3. Turn battery switch to the **"OFF"** position.

Wireless and Electric Start

See page 22 in "Operation" section.

CONTROLS AND FEATURES

Read this operator's manual before operating your generator. Familiarize yourself with the location and function of the controls and features. Save this manual for future reference.

Generator

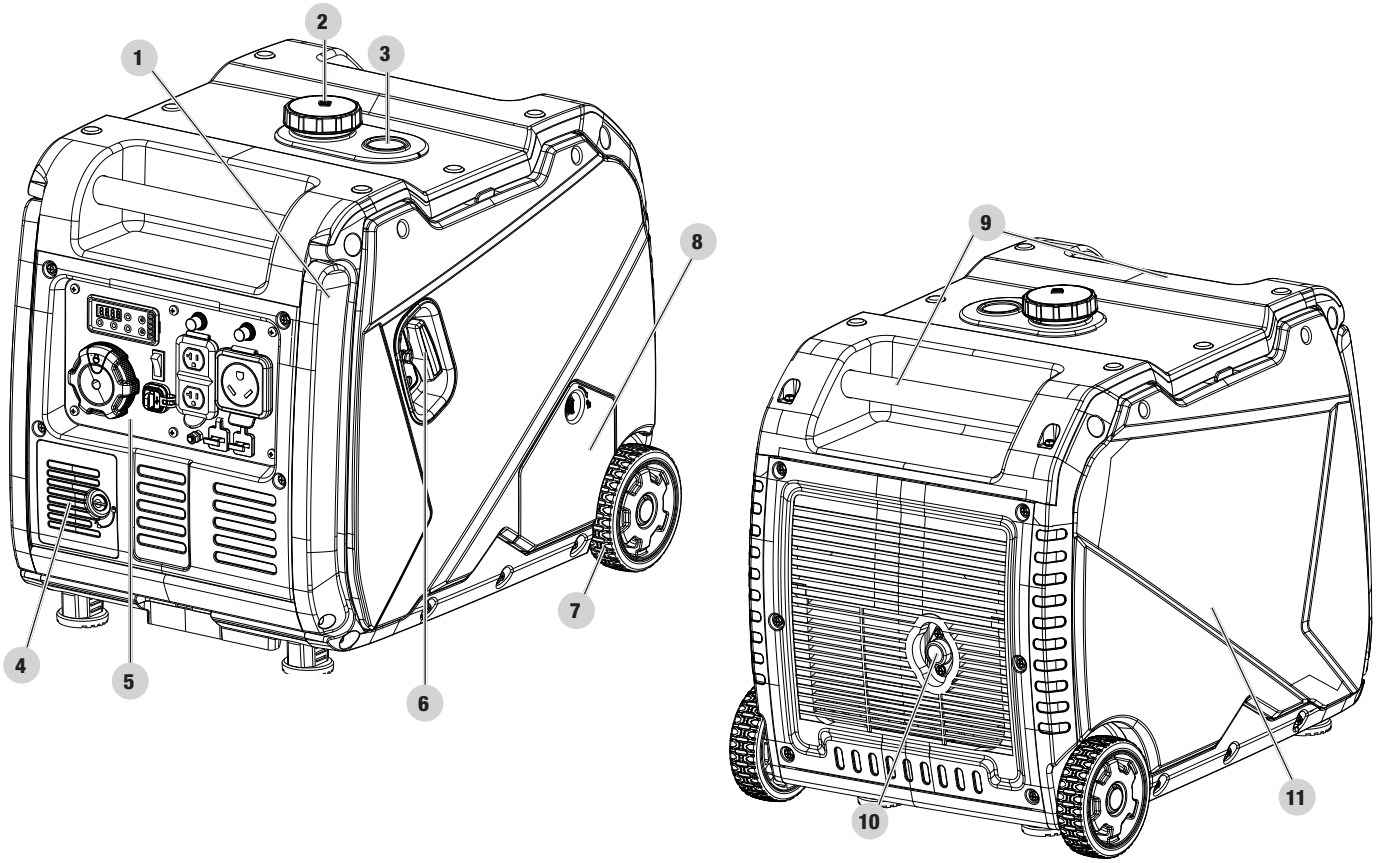

1. **Folding Handle** – Used to move unit by lifting and rolling on wheels. Do not use to lift or carry the unit.
2. **Fuel Cap** – Remove to add fuel.
3. **Fuel Gauge**
4. **Battery Access Cover**
5. **Control Panel** – See *Control Panel* section.
6. **Recoil Starter** – Used to manually start the engine.
7. **Never Flat Wheels** – 5 in. (12.7 cm)
8. **Oil Fill Access Cover**
9. **Carrying Handle(s)** – Used to lift or carry the unit.
10. **Muffler**
11. **Maintenance Cover**

Control Panel

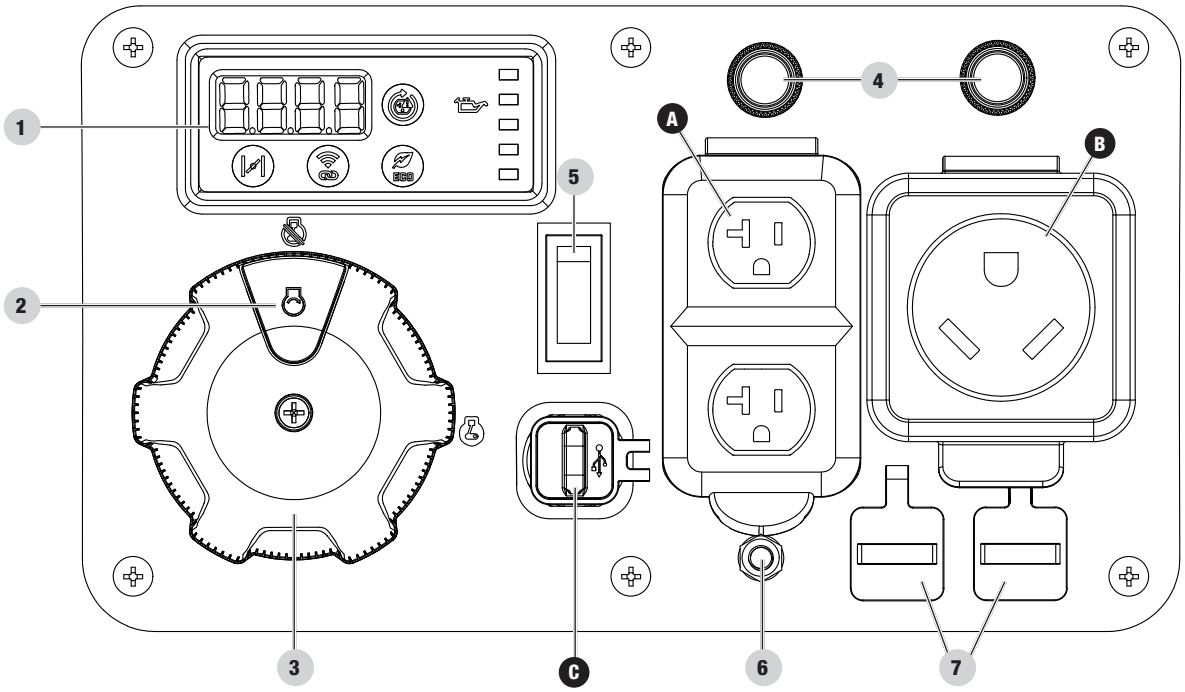

1. **Intelligauge with Power Meter** – See *Intelligauge with Power Meter* section.
2. **Ignition Switch** – Used to START the generator.
3. **EZ Start Dial** – Used to start and stop.
4. **Circuit Breakers (Push Reset)** – Protects the generator against electrical overloads.
5. **Battery Switch** – Enables/disables power supply from battery for remote and electric start.
6. **Ground Terminal** – Consult an electrician for local grounding regulations.
7. **Parallel Outlets** – Used to parallel two inverters together for increased power output. (parallel kit sold separately).

RECEPTACLES		
A		**(2×) 120V AC, 20A (NEMA 5-20R)** May be used to supply electrical power for operation of 120 Volt AC, 20 Amp, single phase, 60 Hz electrical loads.
B		**120V AC, 30A RV (NEMA TT-30R)** May be used to supply electrical power for operation of 120 Volt AC, 30 Amp, single phase, 60 Hz electrical loads.
C		**(2×) 5V DC, 2.1A (USB Type-A)** Each port may be used to supply a maximum of 5V, 2.1A to power cellphones, laptops, tablets, and similar devices.

Intelligauge with Power Meter

The meter is divided into two seperate displays.

The LCD displays each mode for several seconds and then automatically cycles through.

The Power Meter LED displays output in percent (%) with 100% at the top.

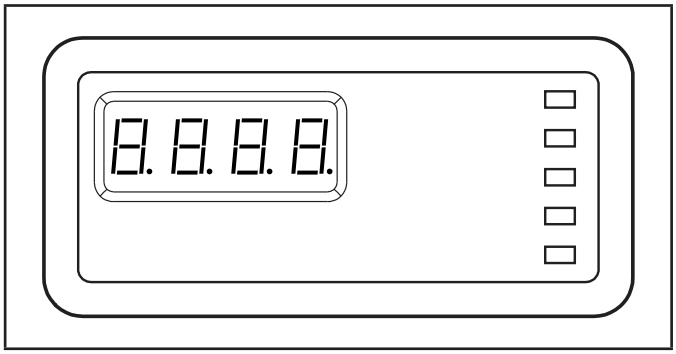

MODE	DESCRIPTION	
Voltage (V)	Output voltage of the generator.	
	Example: 120 volts	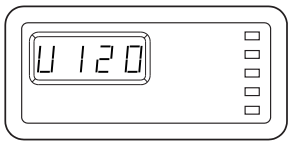
Frequency (H)	Output frequency in hertz.	
	Example: 60.0 hertz	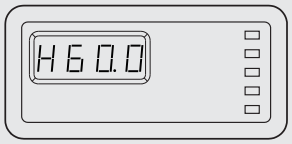
Run Time (R)	Run time of the generator for the current session.	
	Example: 6 hours	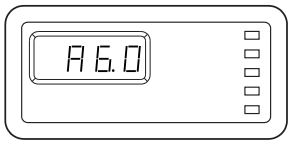
Total Run Time	Total run time of the generator since first operation.	
	Example: 16 hours	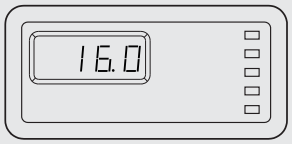
Power Meter	Power Output percentage.	
	Example: 100% Output	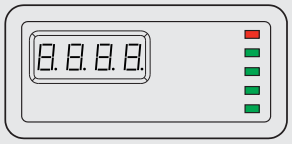

Wireless Remote Control

This generator is equipped with a wireless remote control system for starting and stopping. The system consists of (5) main components:

1. Receiver Control Module (RCM)
2. Remote Control
3. Battery Switch
4. EZ Start Dial
5. Auto-Choke

The Remote Control functions are enabled when:

1. The EZ Start Dial is in the “ON” position, AND
2. The Battery Switch is in the “ON” position.

The Remote Control functions are disabled if either of the above conditions is not met.

To start the generator wirelessly, press the “START” button on the Remote Control one time. The engine will attempt to start (6) times. The RCM controls the Auto-Choke during each attempt to start. If the generator does not start, call Champion Customer Care team for assistance at 1-877-338-0999.

To stop the generator wirelessly, press the “STOP” button on the Remote Control one time.

Remote Control Power Consumption

While the EZ Start Dial is in the “ON” position, the RCM is active and waiting for a remote signal. This function requires electrical current from the battery. If the EZ Start Dial is left in the “ON” position for extended periods (several weeks), the battery can be completely drained.

Moving the EZ Start Dial to the “OFF” position disables the Remote functions, but the RCM still consumes approximately 2 mA from the battery.

To prevent battery drain, press the Battery Switch to the “OFF” position. This disconnects power to the RCM so there is no current draw on the battery.

FCC Statement for Remote Control Device

1. This device complies with Part 15 of the FCC Rules. Operation is subject to the following two conditions:
   1a. This device may not cause harmful interference.
   1b. This device must accept any interference received, including interference that may cause undesired operation.
2. Changes or modifications not expressly approved by the party responsible for compliance could void the user’s authority to operate the equipment.

⚠ NOTICE

This equipment has been tested and found to comply with the limits for a Class B digital device, pursuant to Part 15 of the FCC Rules. These limits are designed to provide reasonable protection against harmful interference in a residential installation. This equipment generates, uses and can radiate radio frequency energy and if not installed and used in accordance with the instructions, may cause harmful interference to radio communications. However, there is no guarantee that interference will not occur in a particular installation. If this equipment does cause harmful interference to radio or television reception, which can be determined by turning the equipment off and on, the user is encouraged to try to correct the interference by one or more of the following measures:

- Reorient or relocate the receiving antenna.
- Increase the separation between the equipment and receiver.
- Connect the equipment into an outlet on a circuit different from that to which the receiver is connected.

Consult dealer or an experienced radio/TV technician for help.

Parts Included

Accessories

Engine Oil ..... 16.9 fl. oz. (500 ml)
Oil Funnel 1
Remote Key Fob 1

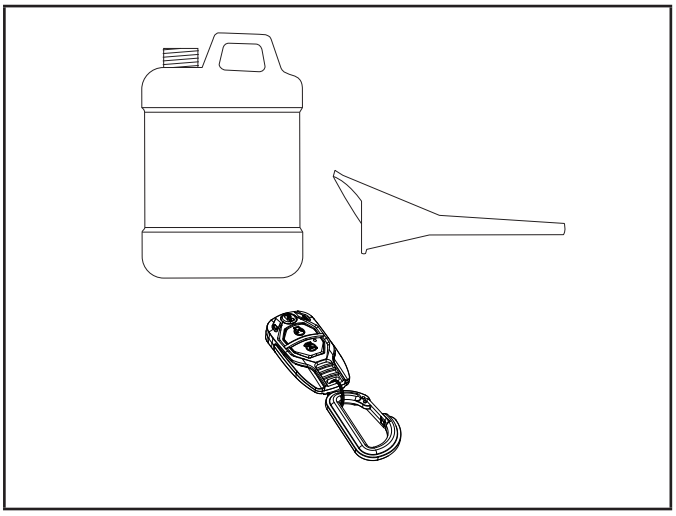

Tools Included

8/10 mm Wrench 1
Spark Plug Socket 1
Reversible Phillips/Flathead Screwdriver 1

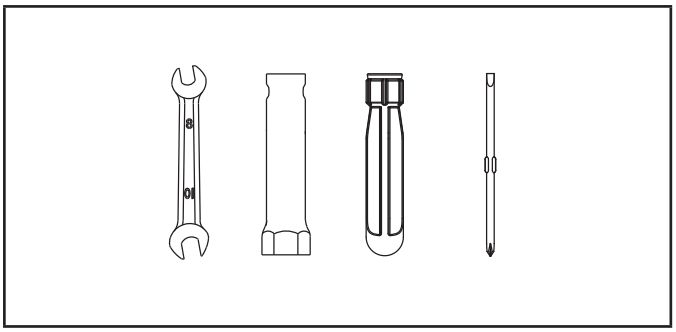

ASSEMBLY

Your generator requires some assembly. It must be properly serviced with fuel and oil before operation.

If you have any questions regarding the assembly of your generator, call our Technical Support Team at 1-877-338-0999. Please have your serial number and model number available.

Unpacking

1. Set the shipping carton on a solid, flat surface.
2. Remove everything from the carton except the generator.
3. By lifting up on the carrying handles, carefully remove the generator from the box (two people lifting is recommended).

Remove Shipping Support Hardware

To protect the generator during shipping, support hardware has been installed between the engine and frame. This hardware MUST BE REMOVED BEFORE adding oil or gasoline to the generator.

NOTICE

DO NOT attempt to run generator without first removing the shipping support hardware. Damage to the generator as a result of not removing the hardware will void the warranty.

1. **BEFORE** filling the engine with oil or gasoline, tip the generator onto the muffler side. Tip onto the flattened cardboard box the generator came in or other protective surface so as to not scratch the enclosure.
2. Remove the four nuts and mounting plates from the bottom side of the generator using the included 8/10 mm wrench. Nuts and spacers can be discarded.
3. Tip the generator upright.

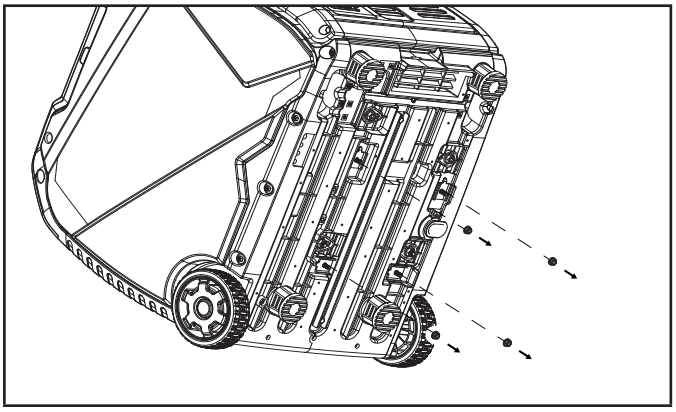

Connect the Battery

1. Remove the non recoil side maintenance cover by removing the two screws with a phillips head screw driver (not included).
2. Push two halves of battery connector together tightly.

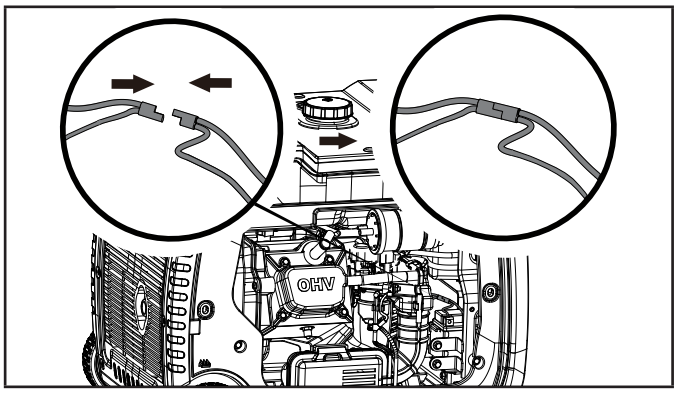

Add Engine Oil

CAUTION

DO NOT attempt to crank or start the engine before it has been properly filled with the recommended type and amount of oil. Damage to the generator as a result of failing to follow these instructions will void your warranty.

NOTICE

The generator rotor has a sealed, pre-lubricated ball bearing that requires no additional lubrication for the life of the bearing.

NOTICE

The recommended oil type for typical use is **10W-30 automotive oil**. However, using the listed conventional oils shown in the “Recommended Engine Oil Type” chart may be used for typical use including the first 5 hours of the break-in run time period of the engine.

If running generator in extreme temperatures, refer to the “Recommended Engine Oil Type” chart.

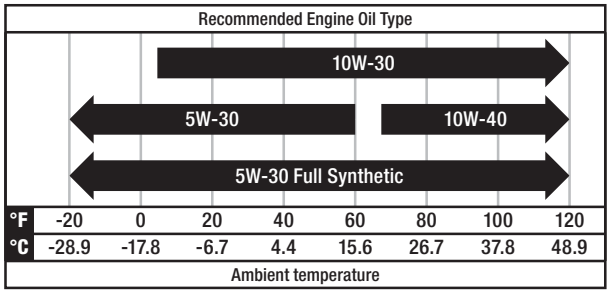

1. Place the generator on a flat, level surface.
2. Turn the oil access cover fastener to the unlocked position and remove the cover.

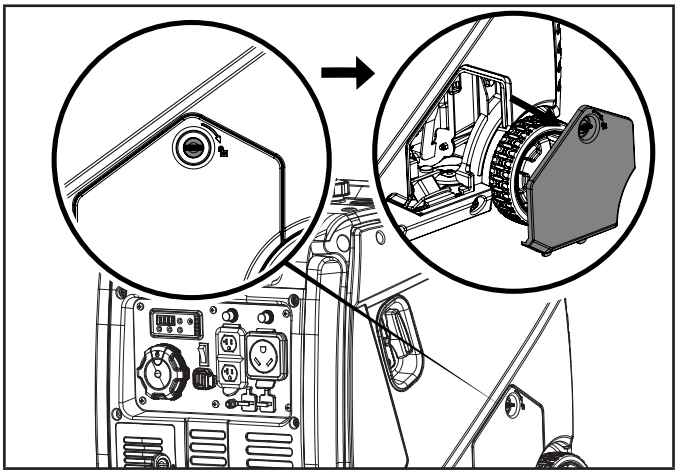

3. Remove oil fill cap/dipstick to add oil.
4. Using a funnel, add up to 16.9 fl. oz. (500 ml) of oil (included). DO NOT OVERFILL. Replace oil fill cap/dipstick and secure maintenance cover.

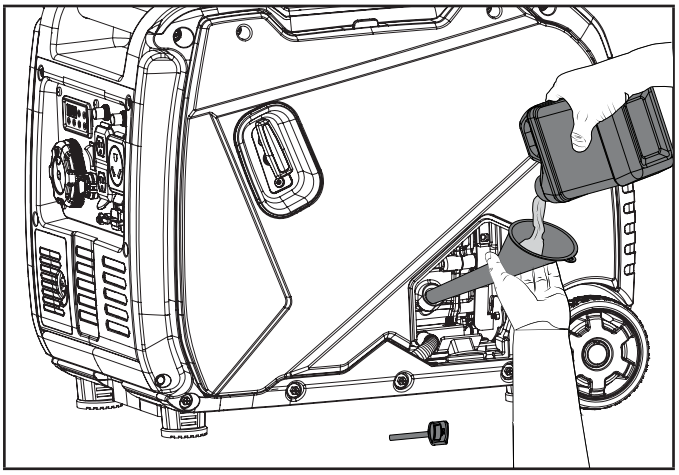

5. Check engine oil level before each use and add as needed.

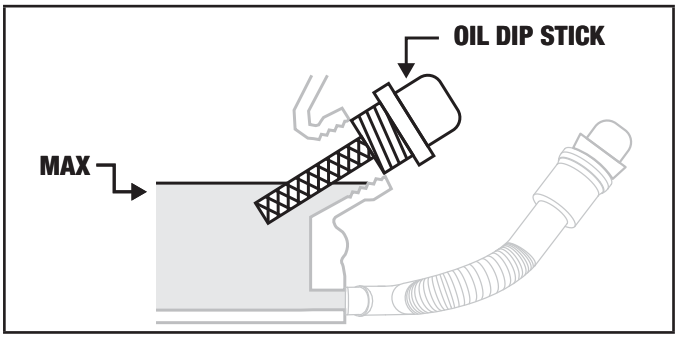

NOTICE

Once oil has been added, a visual check should show oil about 1-2 threads from running out of the fill hole.

When using the dipstick to check oil level, DO NOT screw in the dipstick while checking.

NOTICE

Check oil level often during the break-in period. Refer to the Maintenance section for recommended service intervals.

CAUTION

This engine is equipped with a low oil shut-off and will stop when the oil level in the crankcase falls below the threshold level.

NOTICE

The first 5 hours of run time are the break-in period for the unit. During the break in period stay at or below 50% of the running watt rating and vary the load occasionally to allow stator windings to heat and cool. Adjusting the load will also cause engine speed to vary slightly and help seat piston rings. After the 5 hour break-in period, change the oil.

NOTICE

Synthetic oil may be used after the 5 hour initial break-in period. Using synthetic oil does not decrease the recommended oil change interval. Full synthetic 5W-30 oil will aid in starting in cold ambient < 41º F (5º C) temperatures.

Add Fuel

DANGER

Gasoline vapors are highly flammable and extremely explosive.

DO NOT light or smoke cigarettes. Fire or explosion can cause severe burns or death.

Only fill or drain fuel outdoors in a well-ventilated area.
DO NOT pump gasoline directly into the generator. Use an approved container to transfer the fuel to the generator.

Never use a gasoline container, gasoline tank, or any other fuel item that is broken, cut, torn or damaged.

DO NOT overfill the gasoline tank. Always keep fuel away from sparks, open flames, pilot lights, heat and other sources of ignition.

Use clean, fresh, regular unleaded gasoline with a minimum octane rating of 87 and an ethanol content of 10% or less by volume. E10 E15 E85

DO NOT mix oil with gasoline.

1. Remove the gasoline cap.
2. Slowly add gasoline to the tank. Tank is full when gasoline reaches red circle on screen. DO NOT OVERFILL. Gasoline can expand after filling. A minimum of ¼ in. (6.4 mm) of space left in the tank is required for gasoline expansion, although more than ¼ in. (6.4 mm) is recommended. Gasoline can be forced out of the tank as a result of expansion if overfilled, and can affect the stable running condition of the generator.

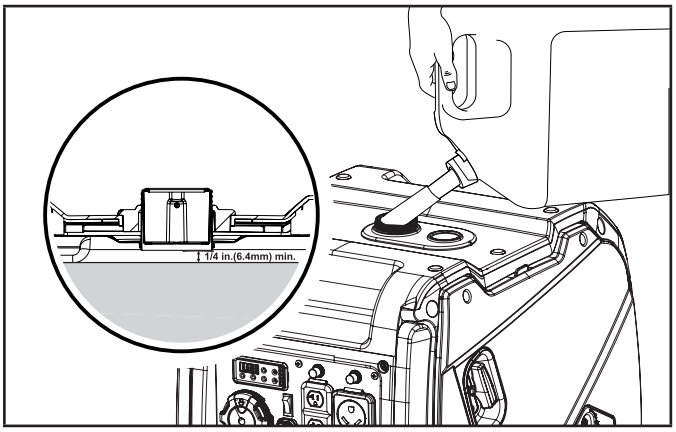

3. The approximate fuel level is shown on the fuel gauge on top of the fuel tank.

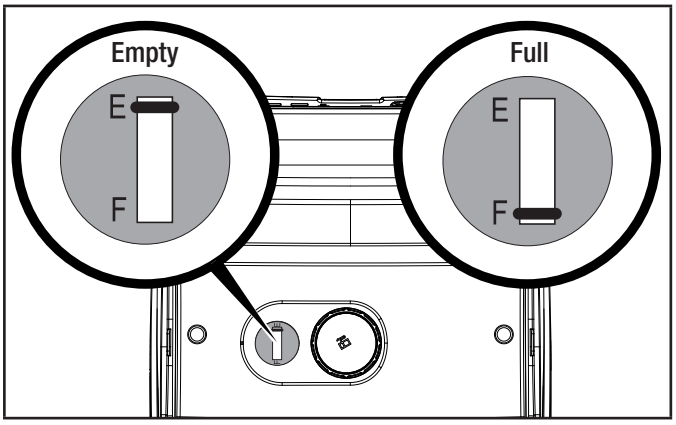

4. Screw on the gasoline cap and wipe away any spilled fuel.

⚠ CAUTION

Use unleaded gasoline with a minimum octane rating of 87 and an ethanol content of 10% or less by volume.

DO NOT light cigarettes or smoke when filling the tank.

DO NOT mix oil and gasoline.

DO NOT overfill the tank. Fill tank to approximately ¼ in. (6.4 mm) below the top of the tank to allow for gasoline expansion.

DO NOT pump gasoline directly into the generator at the pump. Use an approved fuel container to transfer the gasoline to the generator.

DO NOT fill tank indoors.

DO NOT fill tank when the engine is running or hot.

⚠ WARNING

Pouring gasoline too fast through the fuel screen may result in gasoline splashing over the generator and operator while filling.

NOTICE

The generator engine works well with 10% or less ethanol blend gasoline. When using ethanol-gasoline blends there are some issues worth noting:

- Ethanol-gasoline blends can absorb more water than gasoline alone.
- These blends can eventually separate, leaving water or a watery goo in the tank, fuel valve and carburetor. The compromised gasoline can be drawn into the carburetor and cause damage to the engine and/or potential hazards.
- If a fuel stabilizer is used, confirm that it is formulated to work with ethanol-gasoline blends.
- Any damages or hazards caused by using improper gasoline, improperly stored gasoline, and/or improperly formulated stabilizers, are not covered by manufacturer's warranty.

It is advisable to always shut off the gasoline supply and run the engine to starvation after each use. See Storage instructions for extended non-use.

Grounding

Your generator must be properly connected to an appropriate ground to help prevent electric shock.

⚠ WARNING

Failure to properly ground the generator can result in electric shock.

A ground terminal connected to the frame of the generator has been provided (see Controls and Features for terminal location). For remote grounding, connect a length of heavy gauge (12 AWG minimum) copper wire between the generator ground terminal and a copper rod driven into the ground. We strongly recommend that you consult with a qualified electrician to ensure compliance with local electrical codes.

Neutral Floating*

- Neutral circuit **IS NOT** electrically connected to the frame/ground of the generator.
- The generator (stator winding) is isolated from the frame and from the AC receptacle ground pin.
- Electrical devices that require a grounded receptacle pin connection will not function if the receptacle ground pin is not functional.

Neutral Bonded to Frame*

- Neutral circuit **IS** electrically connected to the frame/ground of the generator.
- The generator system ground connects lower frame cross-member below the alternator. The system ground is connected to the AC neutral wire.

**See your Specifications section for specified type of grounding.*

OPERATION

Generator Location

⚠ WARNING

NEVER operate the generator inside any building, garage, basement, crawlspace, shed, enclosure or compartment, including a generator compartment of a recreational vehicle.

NEVER operate or start the generator in the back of an SUV, camper, trailer, truck bed (regular sides, flat or other configuration), under staircases, stairwells, next to walls or buildings or in any other location that will not allow for adequate cooling of the generator or for the proper exit of the exhaust flow from the muffler system.

DO NOT operate or store the generator in wet weather conditions such as rain or snow. Using a generator in wet conditions could result in serious injury or death due to electrocution.

In some state's generators may be required to be registered with the local utility company when used at construction sites and may be subject to additional rules and regulations, consult your local municipal authority.

Generators should always be operated on a flat, level surface at all times (even when not in operation).

Generators must have a minimum of 5 feet (1.5 m) of clearance from all combustible material.

Generators must also have a minimum of 3 feet (91.4 cm) of air flow clearance on all sides to allow for adequate performance cooling, maintenance and servicing.

Always place the generator in a well-ventilated area. NEVER place the generator near air intake vents or where exhaust fumes could be drawn into occupied or confined spaces.

Always carefully consider wind and air currents when positioning generator.

Always allow generators to properly cool before transport or for storage purposes.

Failure to follow proper safety precautions may result in personal injury, damage to the generator and void the manufacturer's warranty.

⚠ WARNING

During operation the muffler and exhaust fumes will become hot. If adequate cooling and breathing space are not supplied, or if the generator is blocked or enclosed, temperatures can become extremely heated and may lead to fire.

Wet Conditions Alert: Do not expose to rain or use in damp locations except as follows:

If you must operate in rain or damp locations, DO NOT operate without proper protection of the electrical components.

Use of a safety canopy that is fire retardant and will provide proper air ventilation for the engines exhaust stream can be used. Keep all objects a minimum of 5 feet (1.5m) away from the generator at all times. Heat from the muffler surface and exhaust stream can ignite combustible materials.

Visit championpowerequipment.com or call to find your Storm Shield cover.

Surge Protection

Electronic devices, including computers and many programmable appliances use components that are designed to operate within a narrow voltage range and may be affected by momentary voltage fluctuations. While there is no way to prevent voltage fluctuations, you can take steps to protect sensitive electronic equipment.

– Install UL1449, CSA-listed, plug-in surge suppressors on the outlets feeding your sensitive equipment.
  Surge suppressors come in single- or multi-outlet styles. They're designed to protect against virtually all short-duration voltage fluctuations.

Wireless Set Button

The wireless set button is a feature that lets the user synchronize the remote key fob to the generator. Up to two remote key fobs can be synchronized to the generator at a time. Follow the proceeding steps to reset a remote or synchronize two remotes:

1. Turn the EZ Start Dial to the "ON" position.

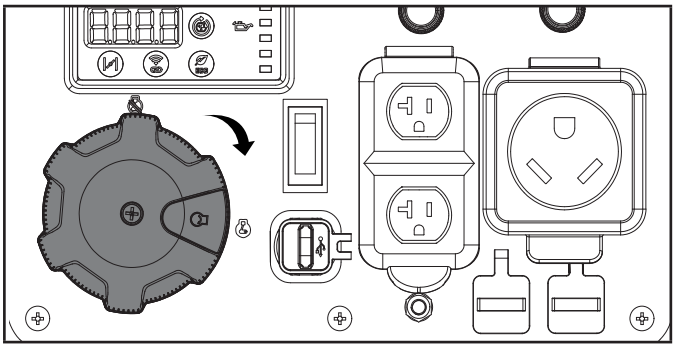

2. Turn the battery switch to the "ON" position.

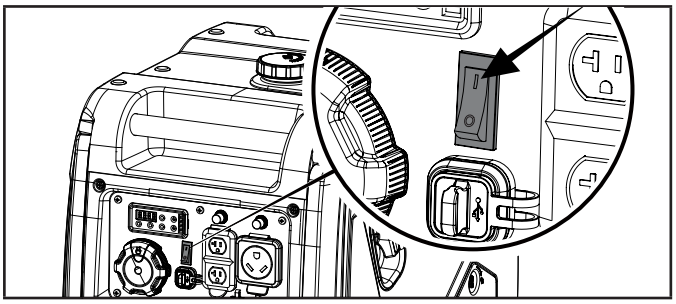

3. Push and hold the wireless set button found on the Intelligauge for approximately three seconds until the button LED illuminates blue.

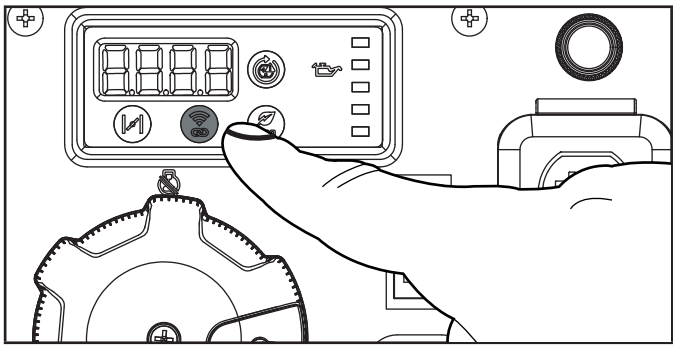

4. Push and release the STOP button on the remote key fob. The blue LED on wireless set button will blink once to indicate program is erased and generator is ready for pairing.

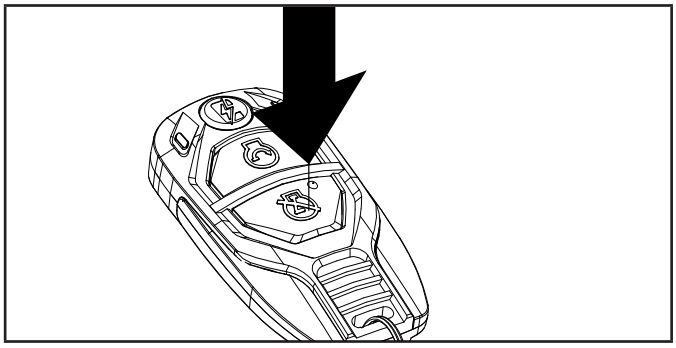

5. Push and release the START button on the remote key fob. The blue LED on wireless set button will blink once to indcate the remote has been programmed.

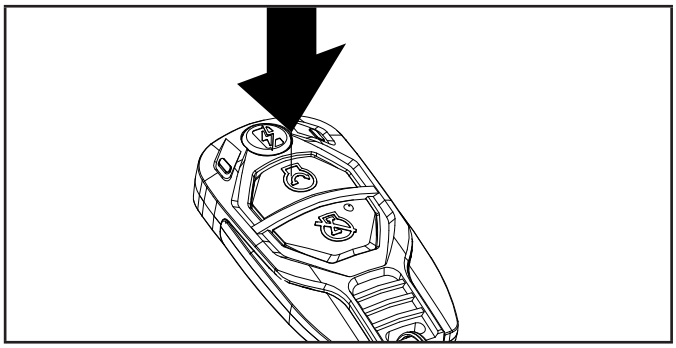

6. Push and hold the wireless set button approximately three seconds until the blue LED on wireless set button turns off.

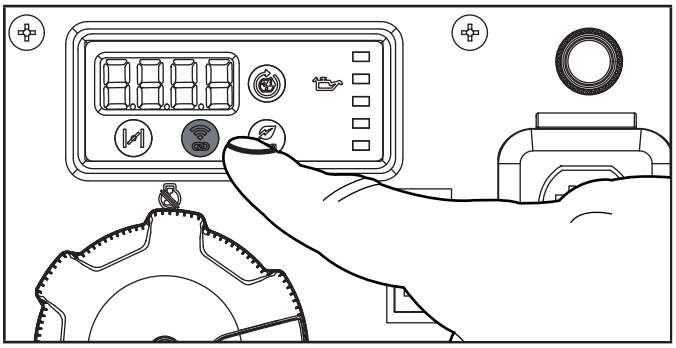

7. Follow the remote START and STOP instructions to verify the remote(s) are working properly.

NOTICE

Two remote key fobs can be synchronized to the generator at one time. If pairing second remote and do not want to erase programming on current remote, skip step 4.

NOTICE

Changing a remote key fob battery may not require the user to reset the remote. If remote does not function after changing the battery, proceed with Wireless Set Button instructions.

Starting the Engine

1. Make certain the generator is on a flat, level surface.

Wireless Remote Start

Wireless remote starting is only possible within 80 feet of the generator.

DO NOT attempt to adjust the choke. The remote system will automatically close and open the choke.

1. Push the battery switch to the “ON” position.

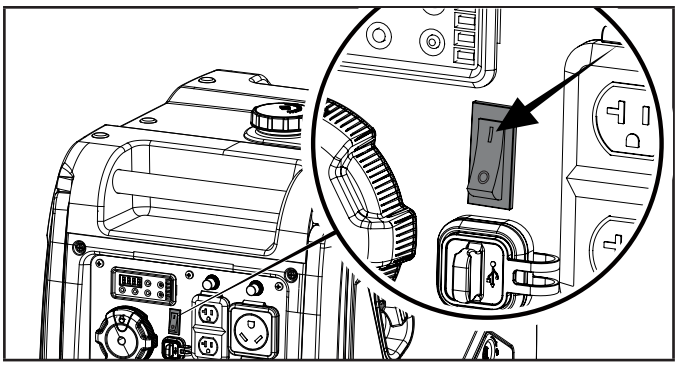

2. Turn the EZ Start Dial to the “ON” position.

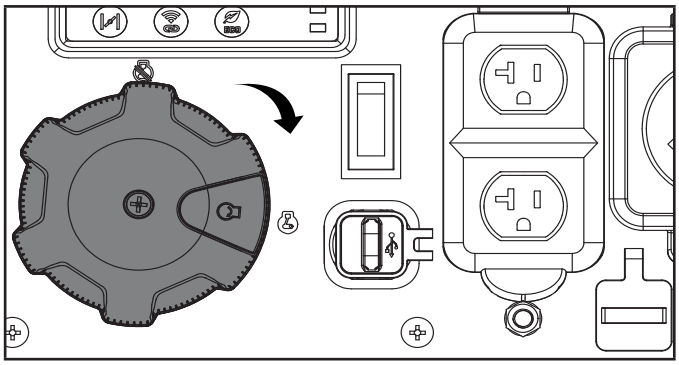

3. Press and release the “START” button on the remote control. DO NOT hold the button down, only press the button once. The engine will attempt to start six times.

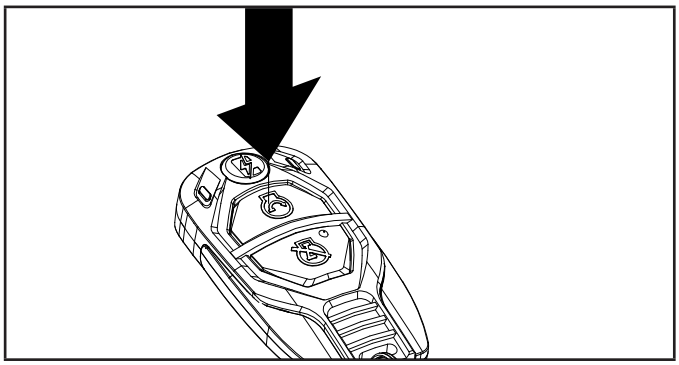

Electric Start

1. Disconnect all electrical loads from the generator. Never start or stop the generator manually with electrical devices plugged in or turned on.
2. Push the battery switch to the “ON” position.

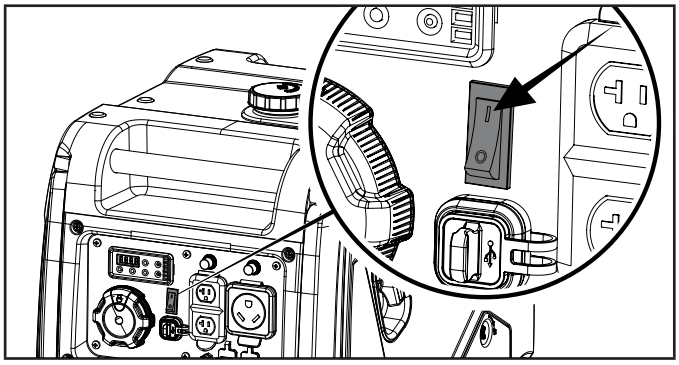

3. Turn the EZ Start Dial to the “ON” position.

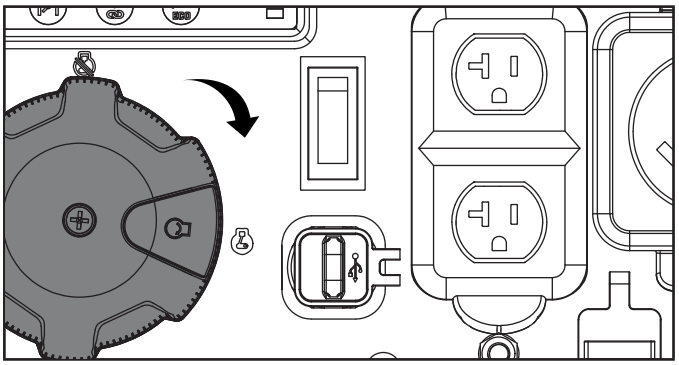

4. Push the choke button one time to set the choke to the “CHOKE” position. Choke button will illuminate when in “CHOKE” position.

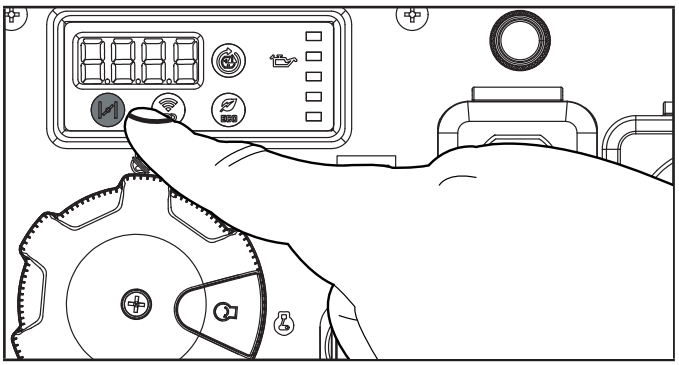

5. Press and hold the yellow ignition switch on the EZ Start Dial toward the center of the dial. Release as the engine begins to start. If the engine fails to start within five seconds, release the switch and wait at least ten seconds before attempting to start the engine again.

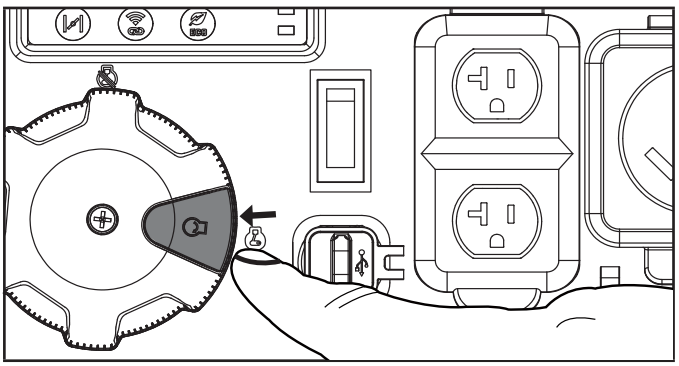

6. Do not over-choke. As soon as engine starts, push the choke button one time to set the choke to the “RUN” position. Choke button will no longer be illuminated when in “RUN” position.

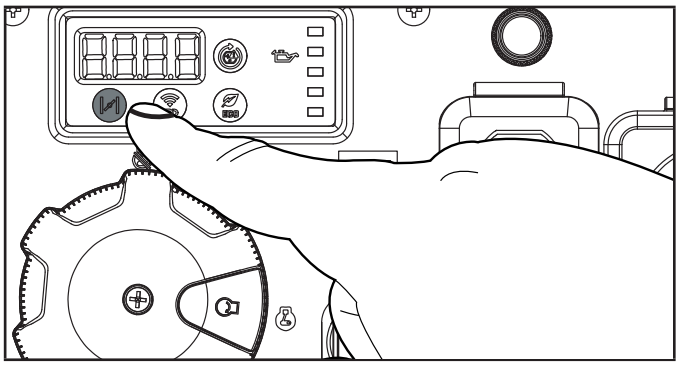

⚠ CAUTION

If the ignition switch is held down in the “START” position longer than 5 seconds it could damage the starter.

Manual Start

1. Disconnect all electrical loads from the generator. Never start or stop the generator manually with electrical devices plugged in or turned on.
2. Push the battery switch to the “ON” position.

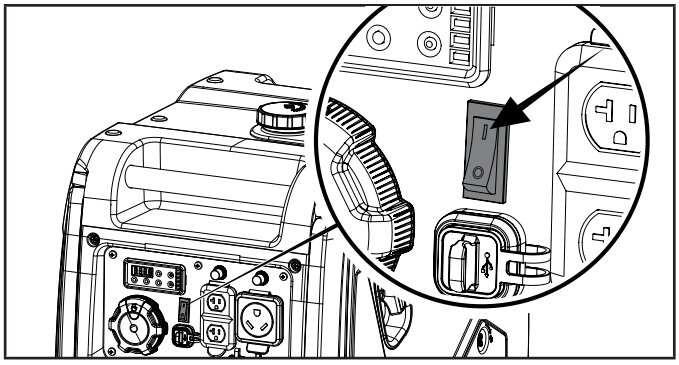

3. Turn EZ Start Dial to the “ON” position.

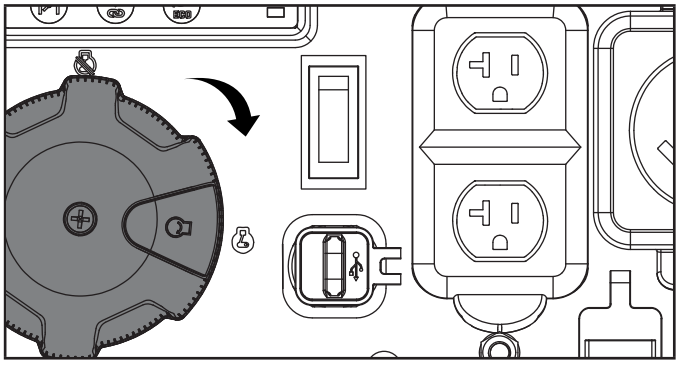

4. Push the choke button one time to set the choke to the "CHOKE" position. Choke button will illuminate when in "CHOKE" position.

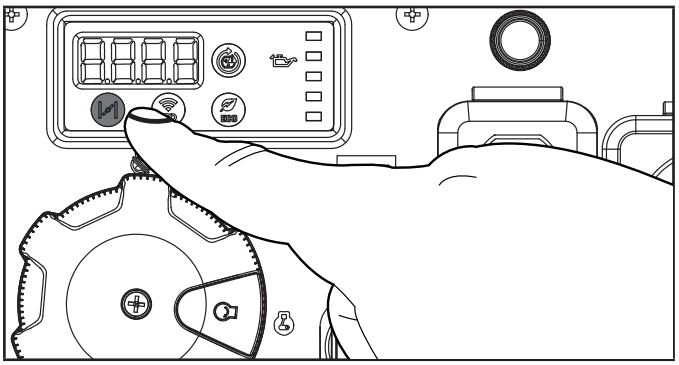

5. Pull the recoil cord slowly until resistance is felt and then pull rapidly.

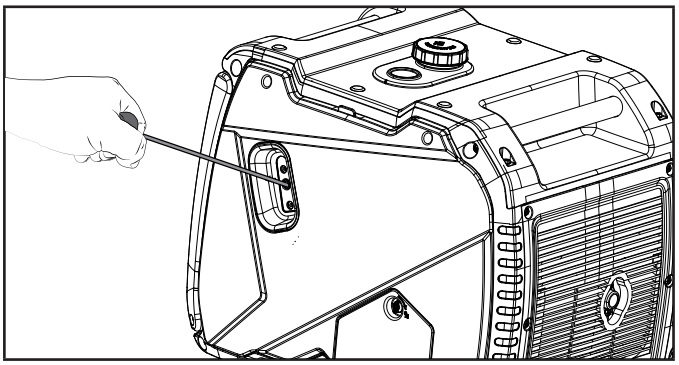

6. Do not over-choke. As soon as engine starts, push the choke button one time to set the choke to the "RUN" position. Choke button will no longer be illuminated when in "RUN" position.

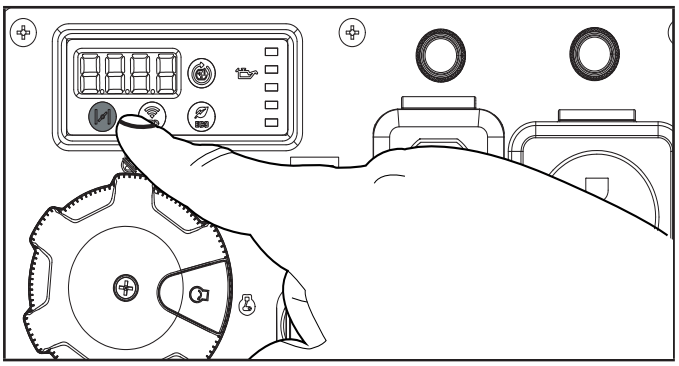

NOTICE

If the engine starts but does not run make certain that the generator is on a flat, level surface. The engine is equipped with a low oil sensor that will prevent the engine from running when the oil level falls below a critical threshold.

Manual Choke Start

If the battery is dead or not able to produce enough current to power the push button choke, the choke itself can be operated manually to help start the engine. To manually choke and start the generator, follow these steps:

1. Loosen the two screws and remove the maintenance cover.

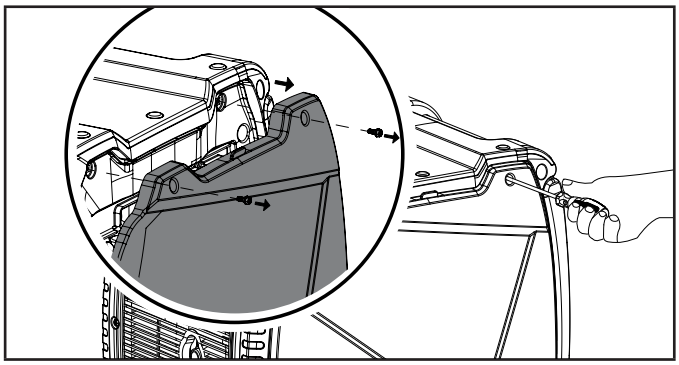

2. Locate the yellow manual choke lever.
3. Turn the choke lever to the "CHOKE" (right) position.

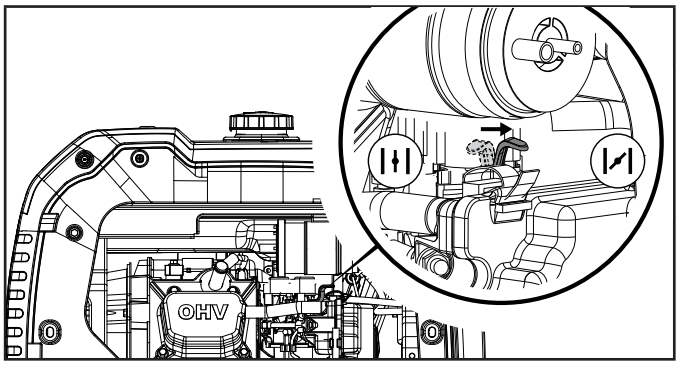

4. Turn the EZ Start Dial to the "ON" position.

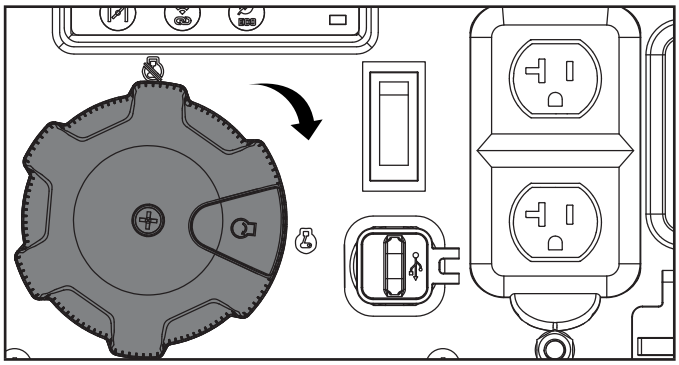

5. Pull the recoil cord until resistance is felt, then pull rapidly.

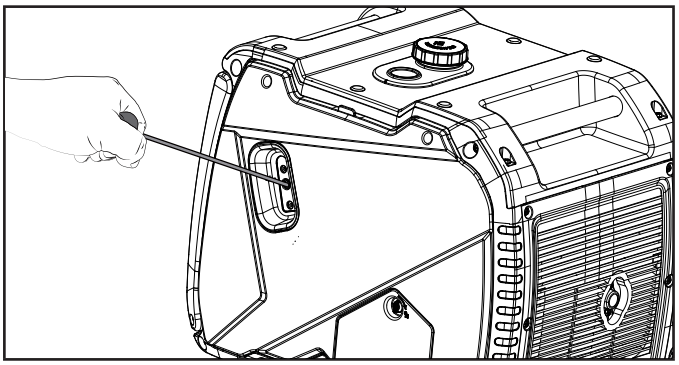

6. Do not over-choke. As soon as engine starts, move the choke lever to the "RUN" (left) position.

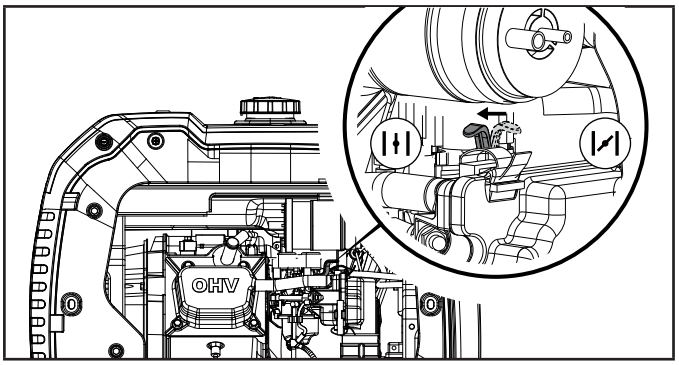

NOTICE

For electric and manual starts only (not wireless remote start): Keep choke in "CHOKE" position for only 1 start attempt. After first start attempt, move the choke to the "RUN" position for up to the next 3 start attempts. Too much choke leads to spark plug fouling/engine flooding due to the lack of incoming air. This will cause the engine not to start.

Connecting Electrical Loads

Let the engine stabilize and warm up for a few minutes after starting.

Plug in and turn on the desired 120 or 240 (if applicable) Volt AC single phase, 60 Hz electrical loads.

– DO NOT connect 3-phase loads to the generator.

– DO NOT overload the generator.

WARNING

Always remember to plug your appliances directly into the generator and do not plug the generator power cord into any electrical outlet or connect to the circuit breaker panel in your home. Connecting a generator to your home's electric utility company's power lines, or to another power source, called 'backfeeding' is a dangerous practice that is illegal in many states and municipalities.

This action if done incorrectly could damage your generator, appliances and could cause serious injury or death to you or a utility worker when attempting to restore power during an outage occurrence in the neighborhood who may then unexpectedly encounter high voltage on the utility line and suffer a fatal shock.

Whether injuries occur or not, if installed incorrectly and not to applicable laws and codes, you may be subject to fines or the utility company may disconnect your home power should this practice be found in your home.

If the generator will be connected to a building electrical system, those connections must isolate the generator power from the utility power. You are responsible for ensuring your generator's electricity does not backfeed into the electric utility power lines. These connections must comply with all applicable laws and codes – Consult your local utility company or a qualified electrician to properly install this connection.

Do Not Overload Generator

Capacity

Follow these simple steps to calculate the running and starting watts necessary for your purposes:

1. Select the electrical devices you plan on running at the same time.
2. Total the running watts of these items. This is the amount of power you need to keep your items running.
3. Identify the highest starting wattage of all devices identified in step 1. Add this number to the number calculated in step 2. Starting wattage is the surge of power needed to start some electric driven equipment. Following the steps listed under "Power Management" will guarantee that only one device will be starting at a time.

4. If the generator power output is cut off due to an overload condition indicated by the AC overload blinking light, lower the load by unplugging one or more items, then press the AC overload reset button before restarting the generator for continued normal operation.

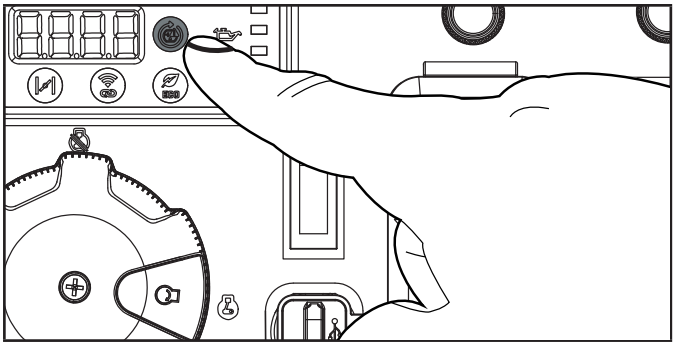

Power Management

Use the following formula to convert voltage and amperage to watts:

Volts × Amps = Watts

To prolong the life of your generator and attached devices, follow these steps to add electrical load:

1. Start the generator with no electrical load attached.
2. Allow the engine to run for several minutes to get up to temperature.
3. Plug in and turn on the first item. It is best to attach the item with the largest load first.
4. Allow the engine to stabilize.
5. Plug in and turn on the next item.
6. Allow the engine to stabilize.
7. Repeat steps 5-6 for each additional item.

NOTICE

Never exceed the specified capacity when adding loads to the generator.

Eco (Economy) Mode

The Eco Mode button can be activated to turn on economy control in order to minimize fuel consumption and noise while operating the unit during times of reduced electrical output. Eco Mode allows the engine speed to idle during periods of non-use.

The engine speed returns to normal when an electrical load is connected. When the economy switch is off, the engine runs at normal speed continuously.

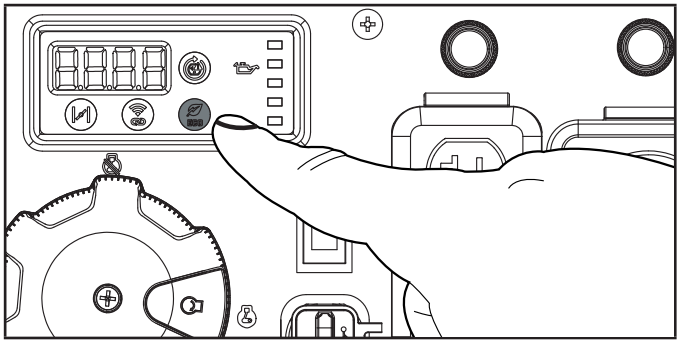

CAUTION

For periods of high electrical load or momentary fluctuations, the Eco Mode should be off.

Parallel Operation

The Champion model 200990 is parallel ready and can be operated in parallel with another Champion unit to increase the total available electrical power. A Champion model 100319 parallel kit (sold separately) is required for parallel operation. For a list of compatible models or to order a parallel kit, please call customer service at 1-877-338-0999 or visit www.championpowerequipment.com.

Detailed instructions for parallel kit installation and operation of the connected generators are provided in the parallel kit operator's manual.

Stopping the Engine

Remote Stop

1. Turn off all electrical connected loads. Never start or stop the generator with electrical devices turned on.
2. Let the generator run at no-load for several minutes to stabilize internal temperatures of the engine and generator.

3. Press the “STOP” button on the remote.

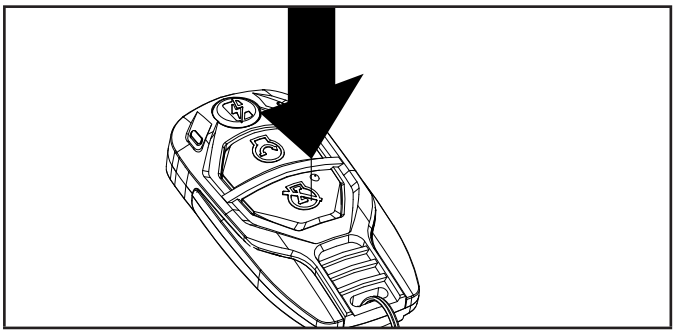

NOTICE

Engine will shut off but the battery switch and EZ Start Dial will remain in the “ON” position waiting for the next start instruction.

To completely shut down the generator, make sure the EZ Start Dial and battery switch are in the “OFF” position when the generator will not be used for an extended period of time.

NOTICE

Battery power is drawn while the generator is in standby mode (battery switch ON).

Do not leave generator in standby mode for an extended period of time or the battery will be completely drained and the wireless remote and electric start feature will no longer function.

Manual Stop

1. Turn off and unplug all electrical connected loads. Never start or stop the generator with electrical devices plugged in or turned on.
2. Let the generator run at no-load for several minutes to stabilize internal temperatures of the engine and generator.
3. Turn the EZ Start Dial to the “OFF” position.

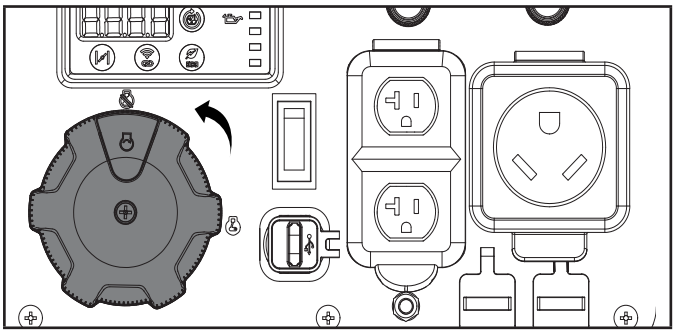

4. *If battery switch is in the “ON” position,* press the battery switch to the “OFF” position.

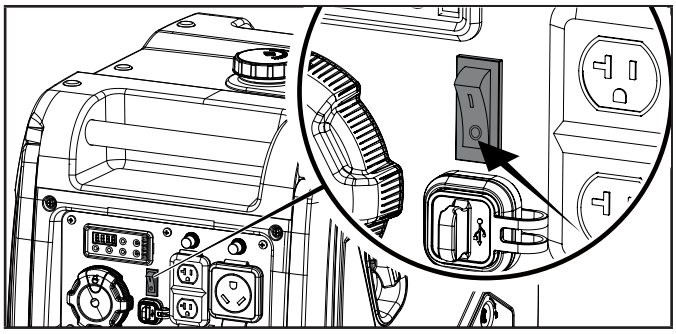

Important: Always ensure that the EZ Start Dial and battery switch are in the “OFF” position when the generator will not be used for an extended period of time.

NOTICE

If the engine will not be used for a period of two (2) weeks or longer, please see the Storage section for proper engine and fuel storage.

Moving the Generator

- NEVER lift or carry the generator using the folding handle.
- ALWAYS place the generator on its wheels in the upright position.
- ALWAYS turn the generator off.
- ALWAYS make sure engine and muffler are cooled down before the generator can be handled safely (typically 15-30 minutes).

1. Begin by raising the folding handle, found on opposite side of wheels.
2. Using the handle, tilt the end of the generator slightly off the ground until balanced on the wheels.
3. While maintaining balance, roll the generator to the desired location.

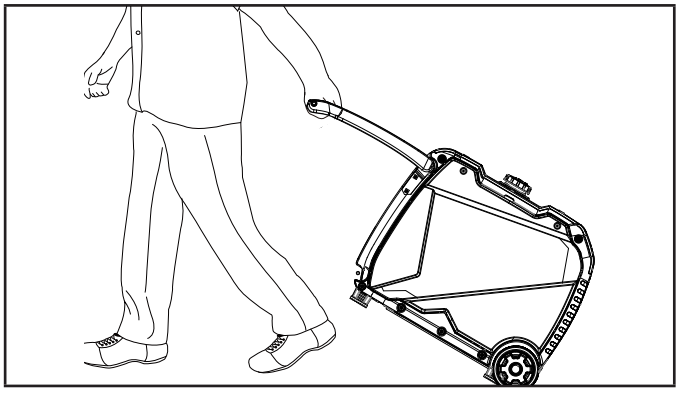

– NEVER tilt sideways while moving the generator.

– Failure to follow these instructions could result in personal injury or damage to the generator.

Operation at High Altitude

The density of air at high altitudes is lower than at sea level. Engine power is reduced as the air mass and air-fuel ratio decrease. Engine power and generator output will be reduced approximately 3½% for every 1000 ft. of elevation above sea level. At high altitudes increased exhaust emissions can also result due to the increased enrichment of the air fuel ratio. Other high altitude issues can include hard starting, increased fuel consumption and spark plug fouling.

To alleviate high altitude issues other than the natural power loss, CPE can provide a high altitude carburetor main jet. The alternative main jet and installation instructions can be obtained by contacting our Technical Support Team. Installation instructions are also available in the Technical Bulletin area of the CPE website.

The part number and recommended minimum altitude for the application of the high altitude carburetor main jet is listed in the following table.

In order to select the correct high altitude main jet it is necessary to identify the carburetor model. For this purpose, a code is stamped on the side of the carburetor. Select the correct high altitude jet part number corresponding to the carburetor code found on your particular carburetor.

Carb. Code	High Alt. Jet Part Number	Min. Altitude
16100-Z1D0510-00A0	16161-Z090410-0000	3000 ft. (914 m)
	16161-Z140310-0000	6000 ft. (1829 m)

⚠ WARNING

Operation using the alternative main jet at elevations lower than the recommended minimum altitude can damage the engine. For operation at lower elevations, the originally supplied standard main jet must be used. Operating the engine with the wrong engine configuration at a given altitude may increase its emissions and decrease fuel efficiency and performance.

MAINTENANCE

Make certain that the generator is kept clean and stored properly. Only operate the unit on a flat, level surface in a clean, dry operating environment. DO NOT expose the unit to extreme conditions, excessive dust, dirt, moisture or corrosive vapors.

⚠ WARNING

Never operate a damaged or defective generator.

⚠ WARNING

Improper maintenance will void your warranty.

NOTICE

For Emission control devices and systems, read and understand your responsibilities for service as stated in the Emission Control Warranty Statement of this manual.

The owner/operator is responsible for all periodic maintenance.

Complete all scheduled maintenance in a timely manner.

Correct any issue before operating the generator.

For service or parts assistance, contact our Technical Support Team at 1-877-338-0999.

Cleaning the Generator

⚠ CAUTION

DO NOT spray generator directly with water.

Water can enter the generator through the cooling slots and damage the generator windings. It can also contaminate the fuel system.

1. Use a damp cloth to clean exterior surfaces of the generator.
2. Use a soft bristle brush to remove dirt and oil.
3. Use an air compressor (25 PSI) to clear dirt and debris from the generator.
4. Inspect all air vents and cooling slots to ensure that they are clean and unobstructed.

To prevent accidental starting, remove and ground the spark plug wire before performing any service.

Changing the Engine Oil

Change oil when the engine is warm. Refer to the oil specification to select the proper grade for your operating environment.

1. Place the generator on a flat level surface.
2. Turn the oil access cover fastener to the unlocked position and remove the cover.
3. Remove the oil drain plug by turning it counter clockwise.

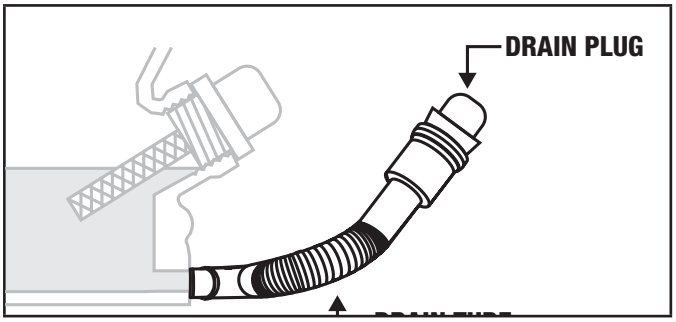

4. Ensure the oil drain hose is lower than the engine and allow the oil to drain completely into an appropriate container.

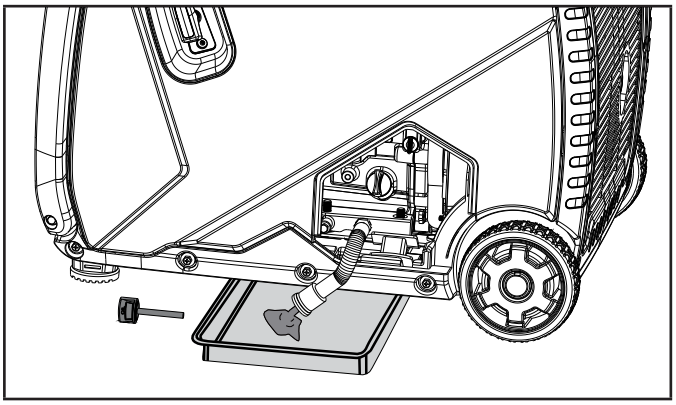

5. Replace the oil drain plug.
6. Add oil according to *Add Engine Oil* in *Assembly* section. DO NOT OVERFILL. Oil not included for routine maintenance.
7. Dispose of used oil at an approved waste management facility.

NOTICE

Once oil has been added, a visual check should show oil about 1-2 threads from running out of the fill hole. If using the dipstick to check oil level, DO NOT screw in the dipstick while checking.

Cleaning and Adjusting the Spark Plug

1. Remove the non recoil side maintenance cover by removing the two screws with a phillips head screw driver (included).
2. Remove the spark plug cable from the spark plug.
3. Use a spark plug socket tool (included), or a 13/16 in. (21 mm) socket (not included) to remove the plug.
4. Inspect the electrode on the plug. It must be clean and not worn to produce the spark required for ignition.
5. Make certain the spark plug gap is 0.028-0.031 in. (0.7-0.8 mm).

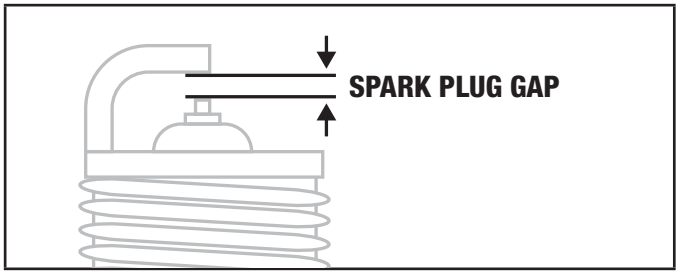

6. Refer to the spark plug types in *Specifications* when replacing the plug.
7. Firmly re-install the plug.
8. Attach the spark plug cable to the spark plug.
9. Reinstall the maintenance cover.

Cleaning the Air Filter

1. Remove the non recoil side maintenance cover by removing the two screws with a phillips head screw driver (included).

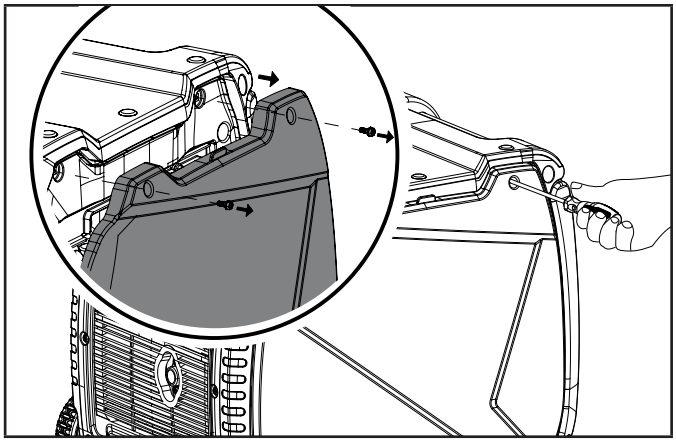

2. Locate the air filter plastic cover and remove by pinching the clips together and pulling the cover off.

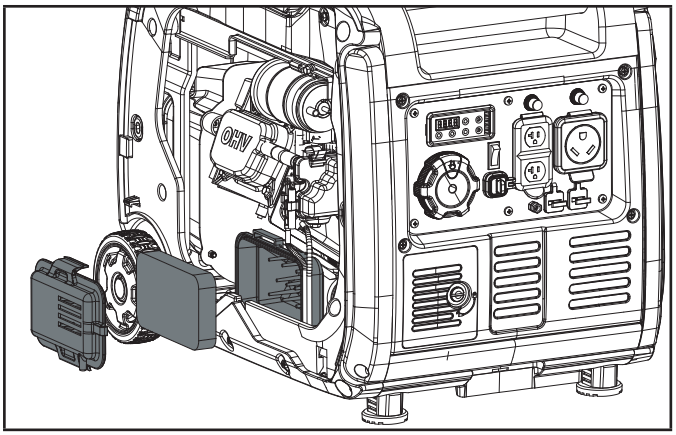

3. Remove the foam element.
4. Wash in liquid detergent and water. Squeeze thoroughly dry in a clean cloth.
5. Saturate in clean engine oil.
6. Squeeze in a clean, absorbent cloth to remove all excess oil.
7. Place the filter in the assembly.
8. Reattach the air filter cover.
9. Reinstall the maintenance cover and tighten the cover screw securely.

Cleaning the Spark Arrestor

1. Allow the engine to cool completely before servicing the spark arrestor.
2. Remove the two screws holding the cover plate which retains the spark arrestor to the muffler.
3. Remove the spark arrestor and spark arrestor screen.
4. Carefully remove the carbon deposits from the spark arrestor and spark arrestor screen with a wire brush.

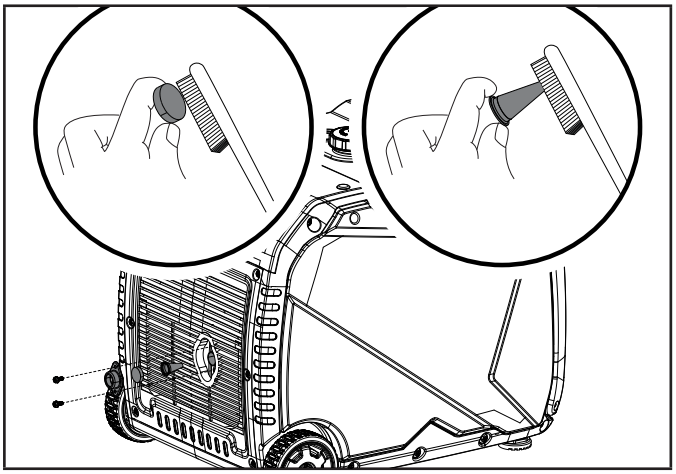

5. Replace the spark arrestor and spark arrestor screen if it they damaged.
6. Position the spark arrestor and spark arrestor screen on the muffler and cover plate and screws removed in step 2.

⚠ CAUTION

Failure to clean the spark arrestor will result in poor engine performance.

NOTICE

Federal and local laws and administrative requirements indicate when and where spark arrestors are required. When ordered, spark arrestors are required for operation of this generator in National Forest lands. In California, this generator must not be used on any forest-covered land, brush-covered land, or grass-covered land unless the engine is equipped with a spark arrestor.

Generator Battery

Your generator is equipped with an automatic battery charging circuit that charges the battery while the engine is running. The battery will maintain a proper charge if the unit is used at least once every 180 days for 2 hours with ECO mode off. If it is used less frequently, the battery should be connected to a trickle charger or battery maintainer (not included) to keep the battery properly charged.

Maximum charging rate should not exceed 1.6 amps. Follow the instructions included with the battery charger. The battery should be fully charged at least twice per year. If the battery is not able to start the engine, it can be started by manually pulling the engine recoil cord. If the battery voltage is extremely low, the charging circuit may not be able to re-charge the battery. In this case, the battery must be connected to a standard automotive style battery charger for re-charging before it can be used.

Disconnect the Battery

1. Pull two halves of battery connector apart.

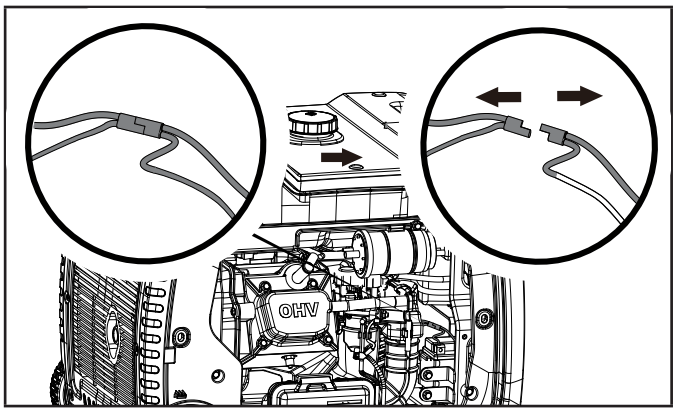

Charge the Battery

For a generator equipped with batteries for electric starting, proper battery maintenance and storage should be followed. A trickle charger or battery maintainer should be used to charge the battery while the generator is in storage. Maximum charging rate should not exceed 1.6 amps. Follow the instructions included with the trickle charger or battery maintainer. The battery should be fully charged at least once per month.

1. Remove the battery from the generator.
2. Charge battery following the battery charger's instructions.
3. After charging, leave the battery for 0.5 to 1 hour before checking the voltage. If the voltage is less than 12.8 volts, additional charging is necessary.

NOTICE

Electrolyte inside the battery is harmful to skin and eyes. If the battery leaks and electrolyte gets in your eyes, do not rub them. Instead, rinse them with clean running water and immediately seek medical attention. If left untreated, electrolyte can cause permanent eye injury.

NOTICE

- Do not charge the battery with charging voltage over 15.0V and charging current over 1.6A.
- Do not charge the battery below 32°F (0°C) or above 113°F (45°C).
- If the battery becomes hot to the touch, stop charging. Allow battery to cool before resuming.

Remote Key Fob Battery

NOTICE

- Always purchase the correct size and grade of battery most suitable for the intended use.
- Clean the battery contacts and also those of the device prior to battery installation.
- Remove batteries from equipment which is not to be used for an extended period of time.
- Remove batteries if consumed or if product is to be left unused for a long time.

Adjusting the Governor

WARNING

Tampering with the factory set governor will void your warranty.

The air-fuel mixture is not adjustable. Tampering with the governor can damage your generator and your electrical devices and will void your warranty. Contact our Technical Support Team at 1-877-338-0999 for all other service and/or adjustment needs.

Maintenance Schedule

Follow the service intervals indicated in the following maintenance schedule.

Service your generator more frequently when operating in adverse conditions.

Contact our Technical Support Team at 1-877-338-0999 to locate the nearest CPE certified service dealer for your generator or engine maintenance needs.

EVERY 8 HOURS OR PRIOR TO EACH USE

- ☐ Check oil level
- ☐ Clean around air intake and muffler

FIRST 5 HOURS (BREAK IN)

- ☐ Change oil

EVERY 50 HOURS OR ANNUALLY

- ☐ Clean air filter
- ☐ Change oil if operating under heavy load or in hot environments

EVERY 100 HOURS OR ANNUALLY

- ☐ Change oil
- ☐ Clean/adjust spark plug
- ☐ Clean spark arrestor
- ☐ Clean fuel valve filter*

EVERY 250 HOURS

- ☐ Clean combustion chamber*
- ☐ Check/adjust valve clearance*

EVERY 3 YEARS

- ☐ Replace fuel line*

** To be performed by knowledgeable, experienced owners or CPE certified service centers.*

STORAGE

⚠ WARNING

To avoid accidental or unintended ignition of your generator during periods of storage, the following precautions should be followed:

– When storing the generator make sure the EZ Start dial is set to the “OFF” position.

Short Term Storage (up to 30 days)

Gasoline in the gasoline tank has a maximum shelf life of up to 1 year with the addition of properly formulated fuel stabilizers and if stored in a cool, dry place. Gasoline in the carburetor, however, may gum up and clog the carburetor if it isn’t used or drained within 2-4 weeks.

If using the generator within 2 weeks, follow the steps according to *Stopping the Engine* section.

1. If not using the generator for 2-4 weeks, begin by making sure all appliances are disconnected from the generator.
2. Start the generator as instructed in *Starting the Engine* section.
3. Let the engine run until fuel starvation has stopped the engine.
4. After the engine stops, turn the EZ Start dial counterclockwise to the “STOP” position.

Mid Term Storage (30 days – 1 year)

Gasoline in the tank has a maximum shelf life of up to 1 year with the addition of a properly formulated fuel stabilizer and stored in a cool, dry place.

1. Be sure all appliances are disconnected from the generator.
2. Add a properly formulated fuel stabilizer to the gasoline tank.
3. Start engine by following directions in the *Starting the Engine* section.
4. Run the generator for 10 minutes so the treated gasoline cycles through the fuel system and carburetor.
5. Let the engine run until fuel starvation has stopped the engine.
6. After the engine stops, turn the EZ Start dial counterclockwise to the “STOP” position.
7. After fuel has run out and the engine has stopped, allow the engine to cool.
8. Remove the non recoil side maintenance cover by removing the two screws with a phillips head screw driver (included).
9. Remove the spark plug and pour about a tablespoon of oil into the cylinder.
10. SLOWLY pull the recoil to rotate the engine to distribute and lubricate the cylinder.
11. Re-install the spark plug and spark plug wire.
12. Re-install the maintenance cover.
13. Clean the generator according to *Cleaning the Generator*.
14. Store the generator in a cool, dry place out of direct sunlight.

Long Term Storage (more than 1 year)

For storage over 1 year, the gasoline tank and carburetor must be completely drained of gasoline.

1. Be sure all appliances are disconnected from generator.
2. Place inverter on blocks to allow appropriate gasoline container or pan to slide under inverter.
3. Remove the non recoil side maintenance cover by removing the two screws with a phillips head screw driver (included).
4. Disconnect the battery by pulling the two halves of battery connector apart.
5. Turn the EZ Start dial clockwise to the full “ON” position.
6. Using a flat head screwdriver, rotate drain screw counterclockwise (3) full turns. Gasoline will drain through clear tubing out underneath the inverter. Make sure draining gasoline empties into an appropriate container.

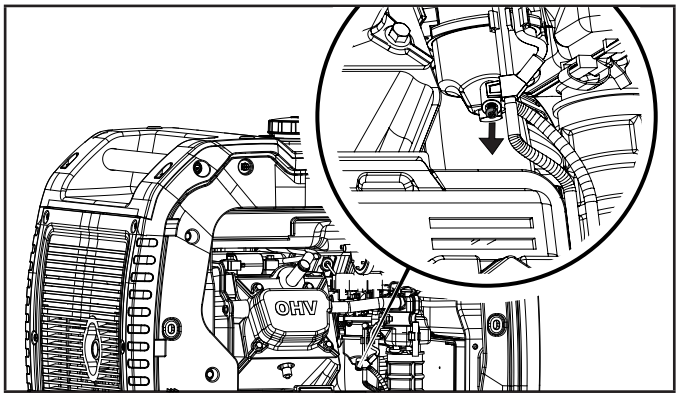

7. When gasoline stops flowing from the clear tube, rotate drain screw clockwise until tight. Properly dispose of the drained gasoline according to local regulations or guidelines.
8. Turn the EZ Start dial to the “STOP” position.
9. Follow steps 8-12 according to Short Term Storage.

Removing from Storage

NOTICE

If the generator has been improperly stored for a period longer than 30 days with ethanol blended gasoline in the gasoline tank and/or carburetor, all fuel must be drained and the carburetor must be thoroughly cleaned of ethanol build up. This process involves technically advanced tasks. For assistance please call our Technical Support Team at 1-877-338-0999.

If the gasoline tank and carburetor were properly emptied of all ethanol blended gasoline prior to the generator being stored, follow the below steps when removing from storage.

1. Be sure the EZ Start dial is in the “STOP” position.
2. Add gasoline to the generator according to *Add Fuel.*
3. Move the EZ Start dial to the “ON” position.
4. After 5 minutes check the carburetor and air filter areas for any leaking gasoline. If any leaks are found, the carburetor will need to be disassembled and cleaned or replaced. If no gasoline leaks are found, turn the EZ Start dial to the “STOP” position.
5. Check engine oil level and add clean, fresh oil if needed. See *Oil Specifications* for proper oil type.
6. Check and clear air filter of any obstructions such as bugs or cobwebs. If necessary, clean air filter according to *Cleaning the Air Filter*.
7. If disconnected, connect the battery by pushing the two halves of battery connector together tightly.
8. Start the generator according to *Starting the Engine*.

SPECIFICATIONS

Generator Specifications

Generator Model	200990
Start Type	Wireless, Electric, Manual
Watts (Starting/Running)	4500/3500
Volts AC	120
AC Amps @ 120V	29.2
Volts DC	5
DC Amps	2.1
Frequency	60 Hz
Phase	Single
Grounding Type	Neutral Floating
Weight	101 lb. (45.6 kg)
Length	23.2 in. (59 cm)
Width	17.7 in. (45 cm)
Height	20.1 in. (51 cm)

Engine Specifications

Model	R210-VP
Displacement	212 cc
Type	4-Stroke OHV

Spark Plug

OEM Type	F6RTC
Replacement Type	NGK BPR6ES or equivalent
Gap	0.028-0.031 in. (0.7-0.8 mm)

Valve

Intake Clearance	0.002-0.006 in. (0.05-0.15 mm)
Exhaust Clearance	0.002-0.006 in. (0.05-0.15 mm)

NOTICE

A technical bulletin regarding valve adjustment procedures is available at www.championpowerequipment.com.

Oil Specifications

DO NOT OVERFILL.

Type	*See following chart
Capacity	16.9 fl. oz. (500 ml)

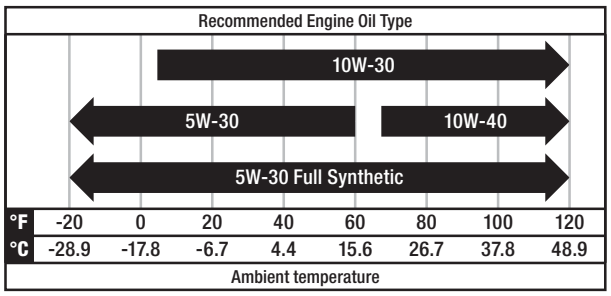

NOTICE

Temperature will affect engine oil and engine performance. Change the type of engine oil used based on temperature shown in the *"Recommended Engine Oil Type"* table.

Fuel Specifications

Use unleaded gasoline with a minimum octane rating of 87 and an ethanol content of 10% or less by volume. DO NOT USE E15 or E85. DO NOT OVERFILL.

Gasoline Capacity	2.3 gal. (8.5 L)

Battery Specifications

Type	Rechargeable, Lithium Ion
Volts DC	12
Capacity	1.6 Ah
Replacement	Contact Customer Service

Temperature Specifications

Manual Starting Temperature Range (°F/°C)	5 to 104/-15 to 40
Remote and Electric Starting Temperature Range (°F/°C)	23 to 104/-5 to 40

NOTICE

An important message about temperature: Your product is designed and rated for continuous operation at ambient temperatures up to 104°F (40°C). When needed, it may be operated at temperatures ranging from 5°F (-15°C) to 122°F (50°C) for short periods of time. If exposed to temperatures outside this range during storage, it should be brought back within this range before operation. In any event, the product must always be operated outdoors, in a well-ventilated area and away from doors, windows and vents.

TROUBLESHOOTING

Problem	Cause	Solution
Engine will not start.	No fuel.	Add fuel.
	Faulty spark plug.	Clean and adjust spark plug or replace.
	Low oil level.	Fill crankcase to the proper level.
		Place generator on a flat, level surface.
	Spark plug wire loose.	Attach wire to spark plug.
	EZ Start dial is in “STOP” position.	See “Starting the Engine” section.
	Old fuel or water in fuel.	Drain fuel and replace with fresh fuel.
	Flooded with fuel.	Let unit stand for 10 mins.
Engine starts but runs roughly.	Choke in the wrong position.	Press choke button until no longer illuminated green. If battery dead, turn choke lever to “RUN” position.
	Dirty air filter.	Clean or replace air filter.
	Dirty fuel valve.	Clean the fuel valve.
	Clogged spark arrestor.	Clean spark arrestor.
Engine will not start wirelessly.	Remote control battery is dead.	Replace remote control battery.
	Generator battery is dead.	Start manually and allow battery to recharge or see “Charge the Battery Section”.
	Battery switch is in the OFF position.	Turn battery switch to ON position.
	Generator out of range of remote signal.	Remote must be with 80 feet of generator.
	Obstructions in between generator and remote.	Clear line of site between generator and remote.
Engine will not start electrically.	Generator battery is dead.	Start manually and allow battery to recharge or see “Charge the Battery Section”.
	Battery switch is in the OFF position.	Turn battery switch to ON position.
Engine shuts down during operation.	Out of fuel.	Fill fuel tank.
	Low oil level.	Fill crankcase to the proper level. Place generator on a flat, level surface.
	Clogged spark arrestor.	Clean spark arrestor.
Generator cannot supply enough power or overheating.	Generator is overloaded.	Review load and adjust. See “Connecting Electrical Loads.”
	Dirty air filter.	Clean or replace air filter.
	Choke in wrong position.	Press choke button until no longer illuminated green. If battery dead, turn choke lever to “RUN” position.
Engine is running but no AC output.	Poor cord connection.	Check all connections.
	Circuit breaker is open.	Reset circuit breaker.
	AC Overload: Button illuminated red.	Reduce AC load and press Overload Reset Button until illuminated green.
	Loose wiring.	Inspect and tighten wiring connections.
	Other.	Contact the help line.

Problem	Cause	Solution
Engine hunts or falters.	Engine governor defective.	Contact the help line.
	Dirty fuel valve.	Clean the fuel valve.
	Carburetor is dirty and running lean.	Contact the help line.
	EZ Start dial in wrong position.	Press choke button until no longer illuminated green. If battery is dead, turn choke lever to the “RUN” position.
Repeated circuit breaker tripping.	Overload.	Review load and adjust. See “Connecting Electrical Loads.”
	Faulty power cords or device.	Check for damaged, bare or frayed wires. Replace defective device.
	Circuit breaker still too hot.	Let unit sit for 5 mins.

For other issues and technical support:

Technical Support Team
Toll Free 1-877-338-0999
support@championpowerequipment.com

WARRANTY*

CHAMPION POWER EQUIPMENT
3 YEAR LIMITED WARRANTY

Warranty Qualifications

To register your product for warranty and FREE lifetime call center technical support please visit:
https://www.championpowerequipment.com/register

To complete registration you will need to include a copy of the purchase receipt as proof of original purchase. Proof of purchase is required for warranty service. Please register within ten (10) days from date of purchase.

Repair/Replacement Warranty

CPE warrants to the original purchaser that the mechanical and electrical components will be free of defects in material and workmanship for a period of three years (parts and labor) from the original date of purchase and 270 days (parts and labor) for commercial and industrial use. Transportation charges on product submitted for repair or replacement under this warranty are the sole responsibility of the purchaser. This warranty only applies to the original purchaser and is not transferable.

Do Not Return The Unit To The Place Of Purchase

Contact CPE's Technical Service and CPE will troubleshoot any issue via phone or e-mail. If the problem is not corrected by this method, CPE will, at its option, authorize evaluation, repair or replacement of the defective part or component at a CPE Service Center. CPE will provide you with a case number for warranty service. Please keep it for future reference. Repairs or replacements without prior authorization, or at an unauthorized repair facility, will not be covered by this warranty.

Warranty Exclusions

This warranty does not cover the following repairs and equipment:

Normal Wear

Products with mechanical and electrical components need periodic parts and service to perform well. This warranty does not cover repair when normal use has exhausted the life of a part or the equipment as a whole.

Installation, Use and Maintenance

This warranty will not apply to parts and/or labor if the product is deemed to have been misused, neglected, involved in an accident, abused, loaded beyond the product's limits, modified, installed improperly or connected incorrectly to any electrical component. Normal maintenance is not covered by this warranty and is not required to be performed at a facility or by a person authorized by CPE.

Other Exclusions

This warranty excludes:

- Cosmetic defects such as paint, decals, etc.
- Wear items such as filter elements, o-rings, etc.
- Accessory parts such as starting batteries, and storage covers.
- Failures due to acts of God and other force majeure events beyond the manufacturer's control.
- Problems caused by parts that are not original Champion Power Equipment parts.

When applicable, this warranty does not apply to products used for prime power in place of a utility.

Limits of Implied Warranty and Consequential Damage

Champion Power Equipment disclaims any obligation to cover any loss of time, use of this product, freight, or any incidental or consequential claim by anyone from using this product.
THIS WARRANTY AND THE ATTACHED U.S. EPA and/or CARB EMISSION CONTROL SYSTEM WARRANTIES (WHEN APPLICABLE) ARE IN LIEU OF ALL OTHER WARRANTIES, EXPRESS OR IMPLIED, INCLUDING WARRANTIES OF MERCHANTABILITY OR FITNESS FOR A PARTICULAR PURPOSE.

A unit provided as an exchange will be subject to the warranty of the original unit. The length of the warranty governing the exchanged unit will remain calculated by reference to the purchase date of the original unit.

This warranty gives you certain legal rights which may change from state to state or province to province. Your state or province may also have other rights you may be entitled to that are not listed within this warranty.

Contact Information

Address

Champion Power Equipment, Inc.
12039 Smith Ave.
Santa Fe Springs, CA 90670 USA
www.championpowerequipment.com

Customer Service

Toll Free: 1-877-338-0999
info@championpowerequipment.com
Fax no.: 1-562-236-9429

Technical Service

Toll Free: 1-877-338-0999
tech@championpowerequipment.com
❗ EMERGENCY 24 HOUR SUPPORT: 1-562-204-1188

*Except as otherwise stipulated in any of the following enclosed Emission Control System Warranties (when applicable) for the Emission Control System: U.S. Environment Protection Agency (EPA) and/or California Air Resources Board (CARB). Whichever warranty applies for the longer period, either this 3 year limited warranty or the applicable Emission Control System Warranty, shall supersede the other.

CHAMPION POWER EQUIPMENT, INC. (CPE), THE UNITED STATES ENVIRONMENTAL PROTECTION AGENCY (U.S. EPA) AND THE CALIFORNIA AIR RESOURCES BOARD (CARB) EMISSION CONTROL SYSTEM WARRANTY

Your Champion Power Equipment (CPE) engine complies with both the U.S. EPA and state of California Air Resources Board (CARB) emissions regulations.

YOUR WARRANTY RIGHTS AND OBLIGATIONS:

The US EPA, California Air Resources Board, and CPE are pleased to explain the Federal and California Emission Control Systems warranty on your 2021 small off-road engine (SORE) and equipment. In the United States and California, new small off-road engines (SORE) and new equipment that use small off-road engines (SORE) must be designed, built and equipped to meet the State's stringent anti-smog standards.

CPE must warrant the emission control system on your small off-road engine (SORE) and equipment for the period of time listed below, provided there has been no abuse, neglect or improper maintenance of your small off-road engine (SORE) and equipment leading to the failure of the emission control system.

Your emission control system may include parts such as the carburetor, fuel-injection system, the ignition system, catalytic converter, fuel tanks, fuel lines (for liquid fuel and fuel vapors), fuel caps, valves, canisters, filters, clamps, connectors, and other associated components. Also included may be hoses, belts, and other emission related assemblies. Where a warrantable condition exits, CPE will repair your small off-road engine (SORE) and equipment at no cost to you including diagnosis, parts and labor.

MANUFACTURER'S WARRANTY COVERAGE:

This Emissions Control System is warranted for two years. If any emissions-related part on your small off-road engine (SORE) and equipment is defective, the part will be repaired or replaced by CPE.

OWNER WARRANTY RESPONSIBILITIES:

As the small off-road engine (SORE) and equipment owner, you are responsible for the performance of the required maintenance listed in your Owner's Manual. CPE recommends that you retain all your receipts covering maintenance on your small off-road engine (SORE) and equipment, but CPE cannot deny warranty coverage solely for the lack of receipts or for your failure to ensure the performance of all scheduled maintenance.

As the small off-road engine (SORE) and equipment owner, you should be aware that CPE may deny you warranty coverage if your small off-road engine (SORE) and equipment or a part has failed due to abuse, neglect, improper maintenance or unapproved modifications.

You are responsible for presenting your small off-road engine (SORE) and equipment to an Authorized CPE service outlet or alternate service outlet as described in (3)(f.) below, CPE dealer or CPE, Santa Fe Springs, Ca. as soon as a problem exists. The warranty repairs shall be completed in a reasonable amount of time, not to exceed 30 days.

If you have any questions regarding your warranty coverage, you should contact:

Champion Power Equipment, Inc.
Customer Service
12039 Smith Ave.
Santa Fe Springs, CA 90670
1-877-338-0999
tech@championpowerequipment.com

EMISSION CONTROL SYSTEM WARRANTY

The following are specific provisions relative to your Emission Control System (ECS) Warranty Coverage.

1. **APPLICABILITY:** This warranty shall apply to 1995 and later model year California small off-road engines (SORE) (for other states, 1997 and later model year engines). The ECS Warranty Period shall begin on the date the new engine or equipment is delivered to its original, end-use purchaser, and shall continue for 24 consecutive months thereafter.

2. **GENERAL EMISSIONS WARRANTY COVERAGE**
   CPE warrants to the original, end-use purchaser of the new engine or equipment and to each subsequent purchaser that each of its small off-road engines (SORE) is:

   2a. Designed, built and equipped so as to conform to U.S. EPA emissions standards for spark- ignited engines at or below 19 kilowatts and all applicable regulations adopted by the California Air Resources Board; and

   2b. Free from defects in materials and workmanship that cause the failure of a warranted part to be identical in all material respects to the part as described in the engine manufacturer's application for certification for a period of two years.

3. **THE WARRANTY ON EMISSION-RELATED PARTS WILL BE INTERPRETED AS FOLLOWS:**

   3a. Any warranted part that is not scheduled for replacement as required maintenance in the Owner's Manual shall be warranted for the ECS Warranty Period. If any such part fails during the ECS Warranty Period, it shall be repaired or replaced by CPE according to Subsection "d" below. Any such part repaired or replaced under the ECS Warranty shall be warranted for a time not less than the remainder of the ECS Warranty Period.

   3b. Any warranted, emissions-related part which is scheduled only for regular inspection as specified in the Owner's Manual shall be warranted for the ECS Warranty Period. A statement in such written instructions to the effect of "repair or replace as necessary" shall advise owners of the warranty coverage for emission related parts. Replacement within the warranty period is covered by the warranty and shall not reduce the ECS Warranty Period. Any such part repaired or replaced under the ECS Warranty shall be warranted for a time not less than the remainder of the ECS Warranty Period.

   3c. Any warranted, emissions-related part which is scheduled for replacement as required maintenance in the Owner's Manual shall be warranted for the period of time prior to the first scheduled replacement point for that part. If the part fails prior to the first scheduled replacement, the part shall be repaired or replaced by CPE according to Subsection "d" below. Any such emissions-related part repaired or replaced under the ECS Warranty, shall be warranted for a time not less than the remainder of the ECS Warranty Period prior to the first scheduled replacement point for such emissions-related part.

   3d. Repair or replacement of any warranted, emissions-related part under this ECS Warranty shall be performed at no charge to the owner at a CPE Authorized Service Outlet.

   3e. The owner shall not be charged for diagnostic labor which leads to the determination that a part covered by the ECS Warranty is in fact defective, provided that such diagnostic work is performed at a CPE Authorized Service Outlet.

   3f. CPE shall pay for covered emissions warranty repairs at non-authorized service outlets under the following circumstances:

      i. The service is required in a population center with a population over 100,000 according to U.S. Census 2000 without a CPE Authorized Service Outlet AND

      ii. The service is required more than 100 miles from a CPE Authorized Service Outlet. The 100 mile limitation does not apply in the following states: Alaska, Arizona, Colorado, Hawaii, Idaho, Montana, Nebraska, Nevada, New Mexico, Oregon, Texas, Utah and Wyoming.

   3g. CPE shall be liable for damages to other original engine components or approved modifications proximately caused by a failure under warranty of an emission-related part covered by the ECS Warranty.

   3h. Throughout the ECS Warranty Period, CPE must maintain a supply of warranted emission-related parts sufficient to meet the expected demand for such emission-related parts and must obtain additional parts if that supply is exhausted.

   3i. Any CPE Authorized and approved emission-related replacement part that do not increase the exhaust or evaporative emissions of the engine or emissions control system may be used in the performance of any ECS Warranty maintenance or repair and will be provided without charge to the owner. Such use shall not reduce CPE's warranty obligation.

   3j. Unapproved add-on or modified parts may not be used to modify or repair a CPE engine. Such use voids this ECS Warranty and shall be sufficient grounds for disallowing an ECS Warranty claim. CPE shall not be liable hereunder for failures of any warranted parts of a CPE engine caused by the use of such an unapproved add-on or modified part.

EMISSION-RELATED PARTS INCLUDE THE FOLLOWING: (using those portions of the list applicable to the engine)

Systems covered by this warranty	Parts Description
Fuel Metering System	Fuel regulator, Carburetor and internal parts
Air Induction System	Air cleaner, Intake manifold
Ignition System	Spark plug and parts, Magneto ignition system
Exhaust System	Exhaust manifold, catalytic converter
Miscellaneous Parts	Tubing, Fittings, Seals, Gaskets, and Clamps associated with these listed systems.
Evaporative Emissions	Fuel Tank, Fuel Cap, Fuel Lines (for liquid fuel and fuel vapors), Fuel Line Fittings, Clamps, Pressure Relief Valves, Control Valves, Control Solenoids, Electronic Controls, Vacuum Control Diaphragms, Control Cables, Control Linkages, Purge Valves, Gaskets, Liquid/Vapor Separator, Carbon Canister, Canister Mounting Brackets, Carburetor Purge Port Connector

TO OBTAIN WARRANTY SERVICE:

You must take your CPE engine or the product on which it is installed, along with your warranty registration card or other proof of original purchase date, at your expense, to any Champion Power Equipment dealer who is authorized by Champion Power Equipment, Inc. to sell and service that CPE product during his normal business hours. Alternate service locations defined in Section (3)(f.) above must be approved by CPE prior to service. Claims for repair or adjustment found to be caused solely by defects in material or workmanship will not be denied because the engine was not properly maintained and used.

If you have any questions regarding your warranty rights and responsibilities, or to obtain warranty service, please write or call Customer Service at Champion Power Equipment, Inc.

Champion Power Equipment, Inc.
12039 Smith Ave.
Santa Fe Springs, CA 90670
1-877-338-0999
Attn.: Customer Service
tech@championpowerequipment.com