Installation, Start-Up, and Service Instructions

CONTENTS

Page
SAFETY CONSIDERATIONS 1
AHRI Certification 2
C-ETL-US Listing 2
Introduction 2
PRE-INSTALLATION 3
Unpack and Inspection 3
Prepare Job Site for Unit Installation 3
Identify and Prepare Units 3
Protect Units from Damage 3
INSTALLATION 3
Step 1 — Place Unit In Position 3
• ALL UNITS (STANDARD)
• TOTAL WEIGHT UNIT CORRECTION FACTOR (LB)
Step 2 — Install Mixing Box 6
• INLET AND OUTLET DAMPERS INSTALLATION
Step 3 — Connect Cooling/Heating Piping 8
• LEAK TESTING
• REFRIGERANT COIL TESTING
• PIPING INSULATION
• CONDENSATE DRAIN
• CONDENSATE FLOAT SWITCH
Step 4 — Make Electrical Connections 18
Step 5 — Ductwork Connection 18
Step 6 — Make Final Preparations 18
START-UP 18
Cooling/Heating System 18
Direct Expansion (DX) Systems 18
Air Balance System 19
Control Board Adjustment 19
Water Balancing System 20
Water Treatment 20
Electronically Commutated Motor (ECM) 20
SERVICE AND MAINTENANCE 20
General 20
Motor/Blower Assembly 20
Coils 23
Electric Resistance Heater Assembly 23
Cabinet/Control Box Maintenance Light 23
Electrical Wiring and Controls 23
Drain 23
Filters — Throwaway 23
Filters — Replacement and Installation 23
Replacement Parts 25
Factory Recommended Spare Parts List 25
APPENDIX A - TYPICAL WIRING DIAGRAMS EXAMPLES 26
START-UP CHECKLIST CL-1

SAFETY CONSIDERATIONS

Installation and servicing of air-conditioning equipment can be hazardous due to system pressure and electrical components. Only trained and qualified service personnel should install, repair, or service air-conditioning equipment.

Untrained personnel can perform basic maintenance functions of cleaning coils and filters and replacing filters. All other operations should be performed by trained service personnel. When working on air-conditioning equipment, observe precautions in the literature, tags and labels attached to the unit, and other safety precautions that may apply.

Follow all safety codes. Wear safety glasses and work gloves. Use quenching cloth for unbrazing operations. Have fire extinguisher available for all brazing operations.

It is important to recognize safety information. This is the safety-alert symbol ⚠. When you see this symbol on the unit and in instructions or manuals, be alert to the potential for personal injury.

Understand the signal words DANGER, WARNING, CAUTION, and NOTE. These words are used with the safety-alert symbol. DANGER identifies the most serious hazards which **will** result in severe personal injury or death. WARNING signifies hazards which **could** result in personal injury or death. CAUTION is used to identify unsafe practices, which **may** result in minor personal injury or product and property damage. NOTE is used to highlight suggestions which **will** result in enhanced installation, reliability, or operation.

⚠ WARNING

ELECTRICAL SHOCK HAZARD

Failure to follow this warning could cause personal injury or death.

Before performing service or maintenance operations on unit, turn off main power switch to unit and install lock(s) and lock-out tag(s). Unit may have more than one power switch.

⚠ CAUTION

CUT HAZARD

Sheet metal parts may have sharp edges or burrs. Use care and wear appropriate protective clothing, safety glasses and gloves when handling parts and servicing air conditioning equipment.

Manufacturer reserves the right to discontinue, or change at any time, specifications or designs without notice and without incurring obligations.

Equipment is initially protected under the manufacturer's standard warranty; however, this warranty is provided under the condition that the steps outlined in this manual for initial inspection, proper installation, commissioning, regular periodic maintenance, and everyday operation of the equipment be followed in detail. This manual should be fully reviewed and understood in advance of initial installation, start-up, and any maintenance. Should any questions arise, please contact your local Sales Representative or the factory BEFORE proceeding.

⚠ WARNING

Never pressurize any equipment beyond specified test pressures listed on the unit rating plate.

Always pressure test with an inert fluid or gas such as clear water or dry nitrogen to avoid possible damage or injury in the event of a leak or component failure during testing.

⚠ CAUTION

Disconnect all power prior to any installation or service (unit may use more than one power source; ensure all are disconnected). Power to remote mounted control devices may not be supplied by unit.

Install approved Lock-Out/Tag-Out protection devices on ALL incoming power sources to equipment being installed or serviced prior to beginning any work. Always verify all incoming power sources are de-energized using an electrical multi-meter.

⚠ WARNING

NO ATTEMPT SHOULD BE MADE TO HANDLE, INSTALL, OR SERVICE ANY UNIT WITHOUT FOLLOWING SAFE PRACTICES REGARDING MECHANICAL EQUIPMENT.

Always use proper equipment support. Secure all pre-installation supports.

⚠ CAUTION

Never wear bulky or loose fitting clothing when working on any mechanical equipment. Gloves should always be worn for protection against sharp sheet metal edges, heat, and other possible injuries. Safety glasses or goggles should always be worn, especially when drilling, cutting, or working with refrigerants, lubricants or cleaning chemicals.

⚠ CAUTION

Always protect adjacent flammable material when welding or soldering. Use a suitable heat shield material to contain sparks or drops of solder. Have a fire extinguisher readily available.

⚠ CAUTION

Always protect chilled and hot water valve bodies, strainers, ball valves, and other flow control related devices from heat caused by soldering or brazing processes.

AHRI Certification

Carrier's Direct Drive Blower Coil units are certified in compliance with Air-Conditioning, Heating, and Refrigeration Institute (AHRI) industry standard AHRI-440 for room fan coil units.

C-ETL-US Listing

Carrier's Direct Drive Series blower coil units are listed by Intertek Testing Services (ITS). ITS's C-ETL-US listing signifies that Carrier's blower coil units have been examined by ITS and comply with the minimum requirements of U.S. and Canadian national product safety standard, UL 60335-2-40/CSA C22.2 No. 236, and that Carrier's manufacturing site has been audited. ITS's re-examination service includes periodic visits to Carrier's factory to ensure continued compliance for all listed products. Refer to Fig. 1 for Proposition 65 Warning information.

Introduction

Carrier fan coil units represent a prudent investment offering trouble free operation and long service with proper installation, operation, and regular maintenance. The equipment covered by this manual is available with a variety of options and accessories. Always consult the approved unit submittals, order acknowledgment, and other manuals for specific details on unit options and accessories. Always follow proper procedures related to safety, handling, installation, operation, and servicing of mechanical equipment as the manufacturer assumes no responsibility for personal injury or property damage resulting from improper or unsafe practices during the handling, installation, service, or operation of any equipment.

⚠ WARNING

This product can expose you to chemicals including Acrylamide, which is known to the State of California to cause cancer and birth defects or other reproductive harm.
For more information, go to www.P65Warnings.ca.gov

⚠ AVERTISSEMENT

Ce produit peut vous exposer à des produits chimiques, y compris l'acrylamide, qui est connu dans l'État de Californie pour causer le cancer et des malformations congénitales ou d'autres problèmes de reproduction. Pour de plus amples informations, prière de consulter www.P65Warnings.ca.gov

⚠ ADVERTENCIA

Este producto puede exponerlo a productos químicos como la acrilamida, que en el estado de California es causante de cáncer y defects de nacimiento u otros daños reproductivos. Para mayor información, visite www.P65Warnings.ca.gov

343839-101 REV.A

Fig. 1 — Proposition 65 Warning Label

PRE-INSTALLATION

Unpack and Inspection

All units are carefully inspected at the factory throughout the manufacturing process under a strict detailed quality assurance program. All major components and sub-assemblies are carefully tested for proper operation and verified for full compliance with factory standards. Operational testing of some customer-furnished components such as DDC (Direct-Digital Controls) controls, pneumatic control valves and switches may be a possible exception.

Each unit is carefully packaged for shipment to prevent damage during normal transit and handling. Equipment should always be stored in a dry and covered place, and in proper orientation marked on the carton.

All shipments are made F.O.B. (free on board) ex-factory and it is the responsibility of the receiving party to inspect the equipment upon arrival. Any obvious damage to the packaging and/or its contents should be recorded on the bill of lading and a claim filed with the freight carrier.

After inspecting condition of packaging exterior, carefully remove each unit from the carton and inspect for hidden damage. Any hidden damage or missing components should be recorded and immediately reported to the carrier and a claim filed. In the event a claim for shipping damage is filed, the unit, shipping carton, and all packing must be retained for physical inspection by the freight carrier. All equipment must be stored in the factory shipping carton with internal packing in place until installation.

At time of receipt, equipment type and arrangement must be verified by review of order documents. Should any discrepancy be found, the local Sales Representative must be notified immediately so that proper action may be taken.

Should any questions arise concerning field warranty repairs, factory must be notified BEFORE any corrective action is taken.

When repairs or alterations can be accomplished locally, the factory must be fully informed of the extent and expected cost of repairs before work begins. When factory operations are required, the factory must be contacted for authorization to return equipment and a Return Authorization Number will be issued.

Unauthorized return shipments of equipment and shipments not marked with an authorization number will be refused. In addition, any claims for unauthorized expenses will not be accepted by the manufacturer.

Prepare Job Site for Unit Installation

To save time and to reduce the possibility of costly errors, set up a complete sample installation in a typical room at the job site. Check all the critical dimensions such as field piping, wiring, and duct connection to ensure they agree with job requirements. Refer to job drawings and product dimension drawings as required. Instruct all trades in their part of the installation. Should any discrepancies be discovered, contact your local representative before continuing with unit installations. See Fig. 2 for unit clearance recommendations.

Identify and Prepare Units

For each unit, confirm incoming and control power requirements match available power source. Refer to unit nameplate and wiring diagram.

1. Review all tags on unit to determine if shipping screws are to be removed. Remove screws as directed.
2. Rotate fan wheel by hand to ensure that fan is unrestricted and can rotate freely. Inspect for shipping damage and fan obstructions. Adjust blower wheel as required.

Protect Units from Damage

Care must be taken to assure that no force or pressure is applied to the coil, piping or drain stub-outs during handling. The equipment covered in this manual IS NOT suitable for outdoor installations. The equipment is never to be stored or installed where it may be subjected to a hostile environment such as rain, snow, or extreme temperatures.

Before, during, and after installation, take specific caution to prevent foreign material such as paint, plaster, and drywall dust from being deposited in the drain pan, on the motor or blower wheels and cooling/heating coils. Failure to do so may have serious adverse effects on unit operation, and in the case of motor and blower assembly, may result in immediate or premature failure and voiding all manufacturers' warranties. Some units and/or job conditions may require some form of temporary covering during construction. While the manufacturer is not involved in the design and selection of support methods and components, it shall be noted that unacceptable system operating characteristics and/or performance may result from improper or inadequate unit structural support. After mounting, the unit is then ready for the various service connections such as water, drain and electrical. Verify which proper type of services are actually provided to the unit. On units requiring chilled water and/or hot water, verify proper line size and water supply availability.

INSTALLATION

Step 1 — Place Unit In Position

ALL UNITS (STANDARD)

Install mixing box when ordered with unit. Follow mixing box installation instructions outlined in the next section. The horizontal blower coil units have 5/8 in. (15.88 mm) knockouts in each corner of the top and bottom panels for 1/2 in. (12.70 mm) all thread (not supplied with unit) to pass through (see Fig. 3-4). Always support the unit at the base until mounting is complete.

Sufficient clearance must be kept for service and maintenance. Minimum recommended clearance for maintenance of the motor and blower wheel is 29 in. (736.60 mm) on each side. Filters can be removed from both sides and the bottom (DHA) or top (DVA) of the filter frame. If side access to the filter is desired, the minimum clearance required is the width of the filter rack plus 6 in. (154.40 mm).

A minimum of 48 in. (121.92 cm) clearance is required between factory supplied electric heater and any combustible materials. (See Fig. 2 for additional clearances information).

For drain pan removal, the recommended clearance should be no less than the width of the unit.

The unit must be mounted level. DO NOT mount the unit on a slope. The drain pan has a built-in slope to ensure proper drainage. Mounting the unit on a slope may result in improper drainage. Field-furnished and installed accessories such as ductwork, mixing boxes, economizers, dampers, etc. must be independently supported or suspended and must not rely on the unit for support.

TOTAL WEIGHT UNIT CORRECTION FACTOR (LB)

See Fig. 5 and 6 for 8-row water-filled coils and double wall construction (see Table 1). For a different number of rows, total unit weight can be determined by:

1. Identify the size of unit and number of rows
2. From Fig. 5 or 6, identify the total weight of the unit
3. From Table 1, identify the correction factor and deduct this factor from the total weight.

See Fig. 5 and 6 for operating weight information. Weight information is based on 8-row water-filled coils and double wall cabinet construction. For a different coil and cabinet options, use the weight correction factor table.

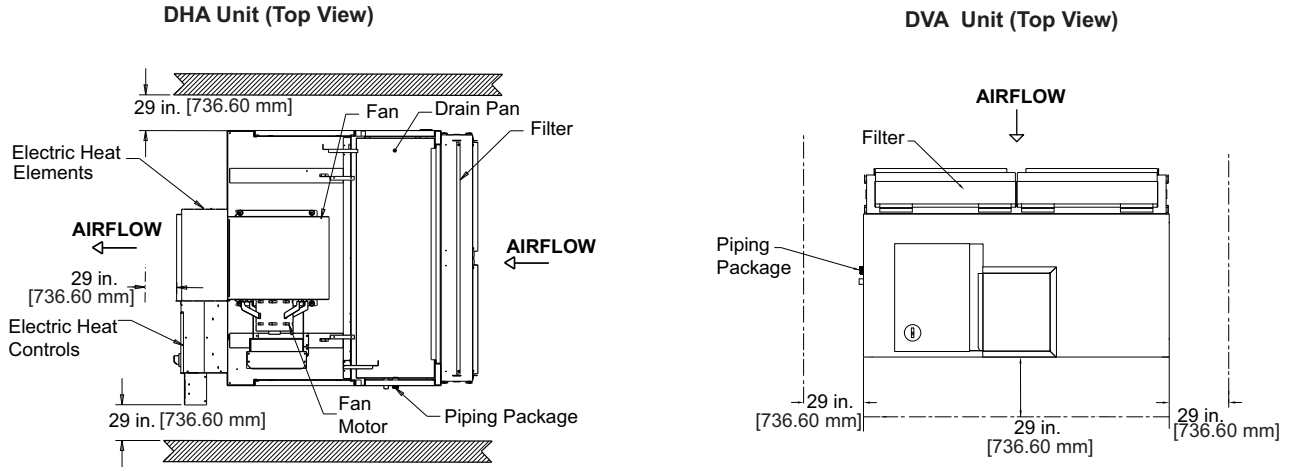

NOTE(S):
a. 29 inches [736.60 mm] is the minimum recommended clearance.
b. For drain pan or coil removal, the recommended clearance should be no less than the width of the unit plus connections.

Fig. 2 — 42DH Horizontal and 42DV Vertical Unit Installation - Recommended Clearances (Top View)

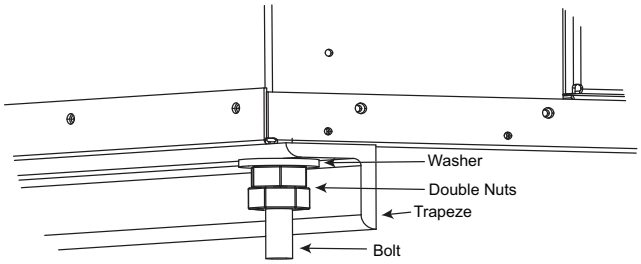

Fig. 3 — DHA Threaded Rod Suspension Mounting Details

Table 1 — Total Unit Weight Adjustment[a]

OPTIONS	42DH, DV UNIT							
	06	08	10	12	16	20	22	30
4-Row Coil	–21	–21	–28	–28	–39	–46	–46	–98
5-Row Coil	–16	–16	–21	–21	–29	–35	–35	–74
6-Row Coil	–11	–11	–14	–14	–20	–23	–23	–49
7-Row Coil	–5	–5	–7	–7	–10	–12	–12	–25
Single Wall Construction	–31	–31	–40	–40	–47	–58	–58	–67

NOTE(S):
a. Unit weights (shown in pounds), ± 10%, are based on the largest water-filled coil.

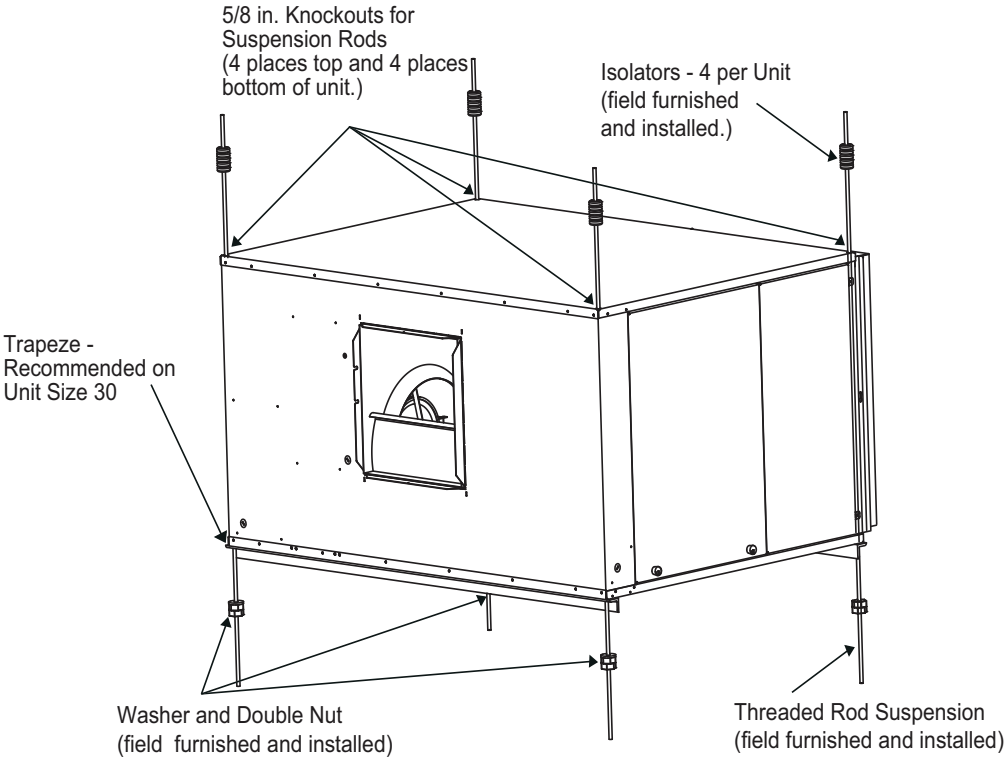

Fig. 4 — Unit Installation - Threaded Rod Suspension

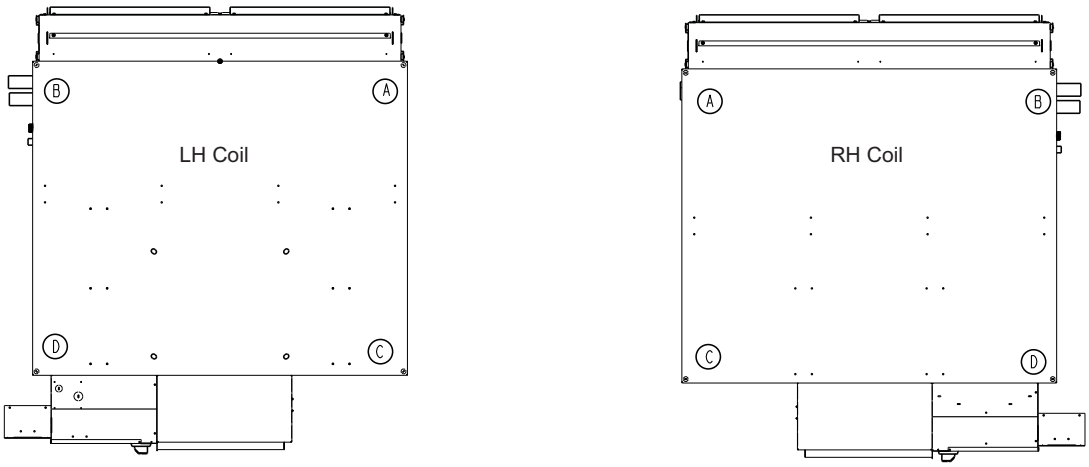

Corner Weights — Horizontal Units (DHA)[a]

UNIT DHA	NO ELECTRIC HEAT (lb)					WITH ELECTRIC HEAT (lb)				
	A	B	C	D	TOTAL	A	B	C	D	TOTAL
06	42	46	36	47	171	42	58	36	66	202
08	41	47	38	45	171	41	58	36	67	202
10	51	53	49	63	217	51	60	56	83	250
12	50	52	51	64	217	50	58	57	85	250
16	65	70	64	75	274	70	69	66	104	309
20	78	90	77	95	340	81	96	77	107	378
22	83	105	80	99	367	86	111	81	111	389
30	103	113	97	117	430	104	120	96	149	469

NOTE(S):

a. Operating weight information is based on 8-row water-filled coils and double wall cabinet construction. For a different coil and cabinet option, use the weight correction factor table.

Fig. 5 — 42DHA Horizontal Unit — Operating/Distributed Weight Calculations

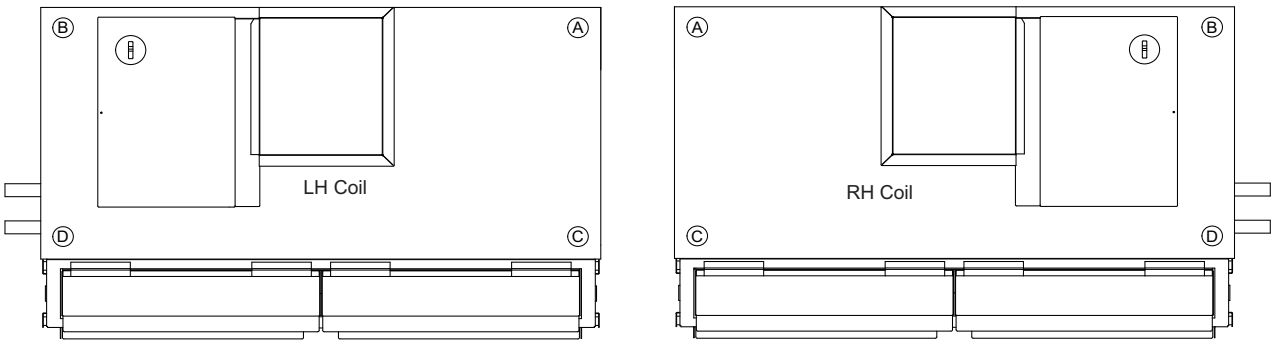

NOTE: Some unit components are removed for clarity.

Corner Weights — Vertical Units (DVA)[a,b]

UNIT DVA	NO ELECTRIC HEAT (lb)					WITH ELECTRIC HEAT (lb)				
	A	B	C	D	TOTAL	A	B	C	D	TOTAL
06	76	38	35	42	191	85	40	44	49	218
08	85	39	37	38	199	94	48	44	47	234
10	78	45	44	78	245	86	58	55	84	283
12	84	45	46	80	255	97	62	58	92	309
16	85	74	62	82	306	105	79	70	92	346
20	90	84	77	88	339	111	88	81	99	379
22	110	90	73	90	363	133	88	92	99	412
30	147	140	113	128	528	160	140	131	137	568

NOTE(S):

a. Unit weights (shown in pounds), ± 10 percent, are based on the largest water-filled coil.
b. The operating weight information is based on 8-row water filled coils and double wall cabinet construction. For different coil and cabinet options, use the weight adjustment table.

Fig. 6 — 42DVA Vertical Unit — Operating/Distributed Weight Calculations

Step 2 — Install Mixing Box

1. Mixing boxes are pre-assembled from the factory for ease of installation. A linkage kit consisting of 2 crank arms, 2 swivels, and either a 25 in. (635 mm) for sizes 06-16 or a 34 in. (863.60 mm) after 34-inch (for sizes 20-30) length of 5/16 in. (7.94 mm) rod is provided for field-installation of an actuator.
2. Assemble the base rails (provided with mixing box). (See Fig. 7.) All hardware required for assembly is included and the base rails are letter coded for ease of assembly. (See Fig. 8.)
3. Place unit on the base rails. Then install mixing box and attach to base rail using the No. 8 x 1/2 in. fasteners (DHA) or No. 12 x 3/4 in. fasteners (DVA) at the locations shown in Fig. 9 and 10.
4. Seal the connection between the mixing box and the return duct flange. Be careful not to tape or seal the filter access panel. For units with 4 in. filters, the mixing box will overhang the end base rail by 2 in. See Fig. 11 for unit dimensions.

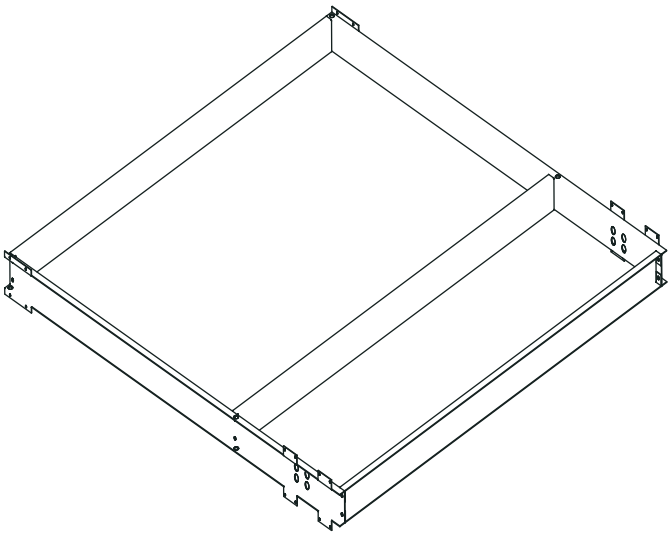

Fig. 7 — Base Rails

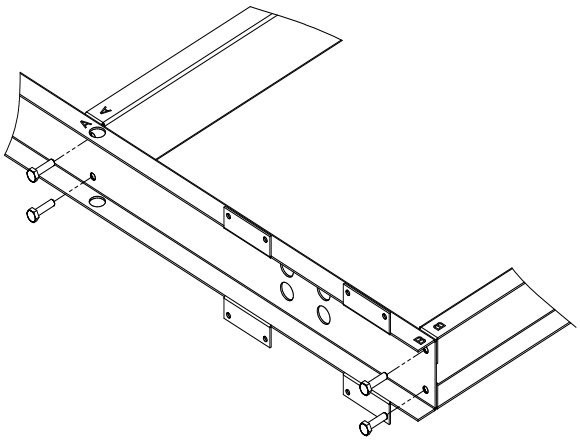

Fig. 8 — Letter Coding on Base Rail Parts

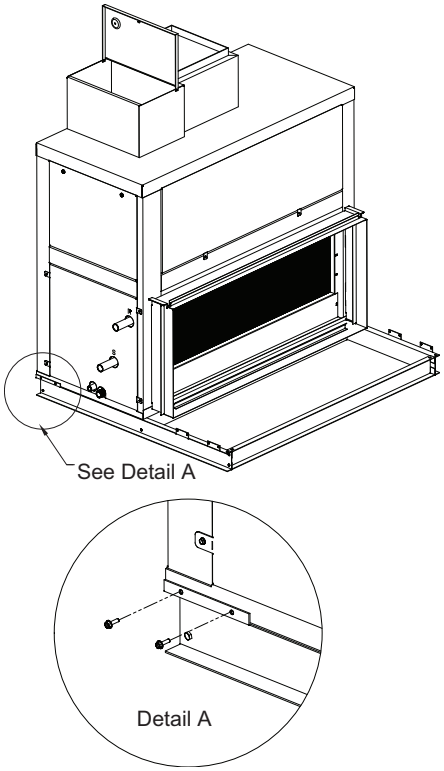

Fig. 9 — 42DV Vertical Units with Mixing Box Option

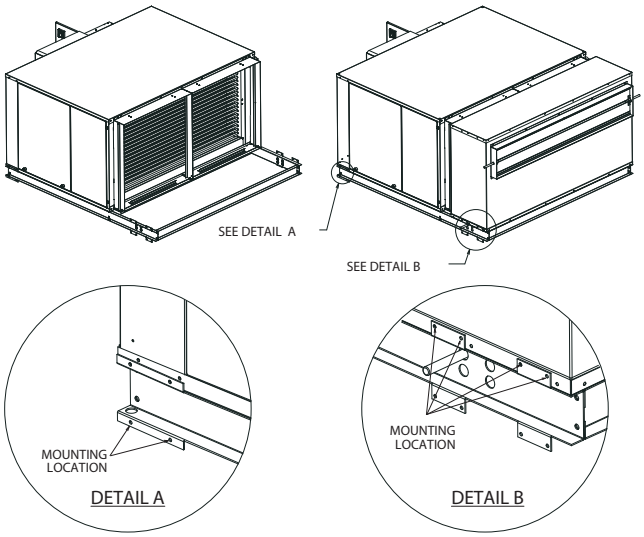

Fig. 10 — 42DH Horizontal Units with Mixing Box Option

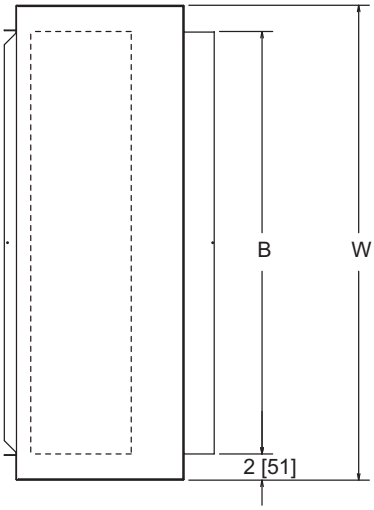

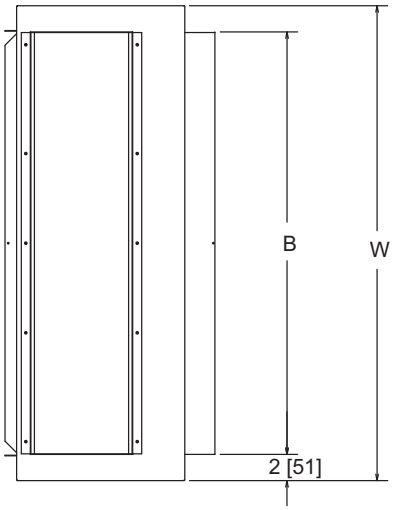

Top Views

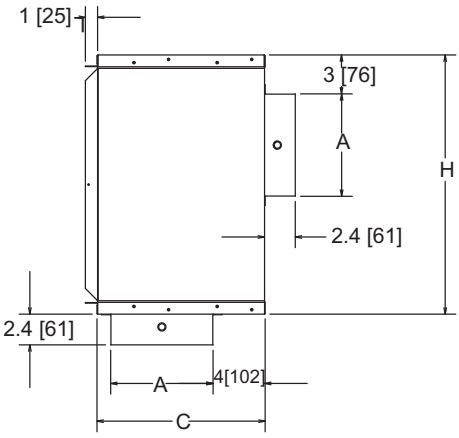

BTM/Rear Inlet - 42DH

NOTE: Dimensions are in inches [mm].

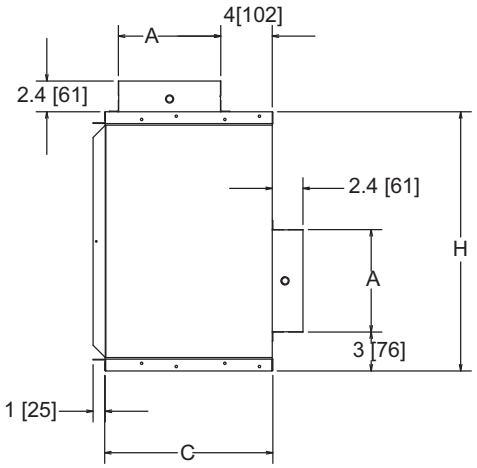

Top/Rear Inlet - 42DH

Top/Front Inlet - 42DV

DIMENSIONS in. [mm]					
42DH, DV UNIT SIZE	**H**	**W**	**A**	**B**	**C**
06	18.50 [470]	28 [711]	6 [711]	24 [610]	11 [279]
08	18.50 [470]	28 [711]	6 [711]	24 [610]	11 [279]
10	20.28 [514]	37 [940]	8 [940]	33 [828]	13 [330]
12	20.28 [514]	37 [940]	8 [940]	33 [828]	13 [330]
16	20.28 [514]	47 [1194]	8 [1194]	43 [1092]	13 [330]
20/22	22.75 [578]	48 [1219]	8 [1219]	44 [1118]	13 [330]
30	31.00 [787]	48 [1219]	10 [1219]	44 [1118]	15 [381]

Fig. 11 — Optional Mixing Box

INLET AND OUTLET DAMPERS INSTALLATION

1. Install actuator per manufacturer's instructions.
2. Adjust damper shafts outward to extend past any obstacles that might cause interference. Do not adjust inward end of shaft within a distance of 2 in. (50.80 mm) of bronze bushing.
3. Position inlet damper and outlet damper to coincide with current or intended position of actuator arm, depending on actuator's position (opened/closed). Note rotation direction of each damper.
4. Install crank arms to each damper shaft approximately parallel to each other while maintaining state/position of dampers. (See Fig. 12.) Check for range of motion clearances before tightening.

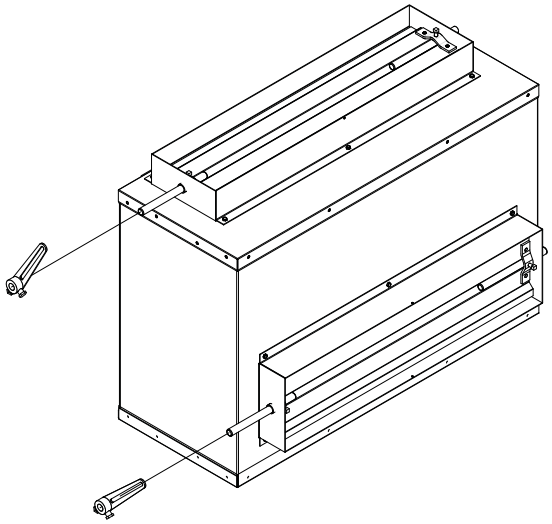

Fig. 12 — Install Crank

5. Install swivels to crank arms and hand tighten. (See Fig. 13.)

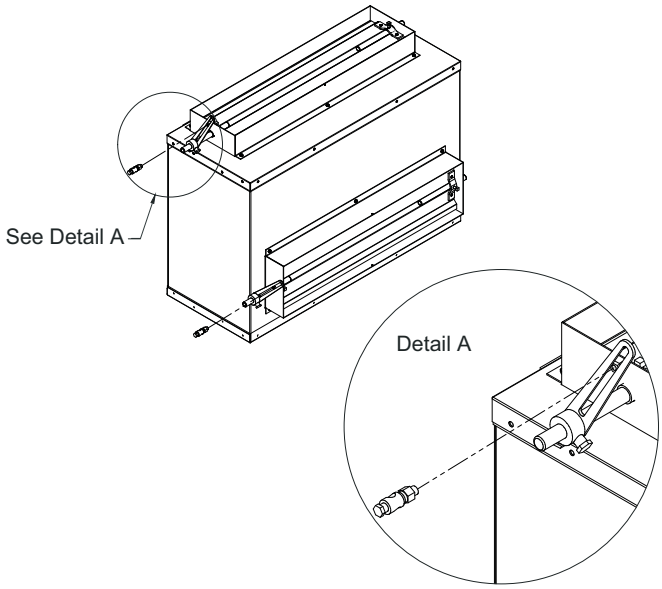

Fig. 13 — Install Swivels

6. Insert 5/16 in. (7.94 mm) damper rod through mounting hole of each swivel. (See Fig. 14.) Position shaft to ensure there is not interference at any point during travel. Tighten rod clamp of swivel onto each damper rod.
7. Confirm correct operation of dampers. Adjust as needed. Tighten remaining fasteners.

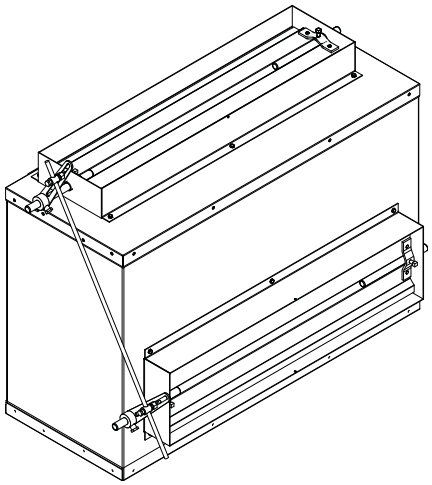

Fig. 14 — Install Damper

Step 3 — Connect Cooling/Heating Piping

CAUTION

Residue and loose particles resulting from manufacturing and field piping techniques such as joint compounds, soldering flux, and metal shavings may be present in the unit and the piping system. This may cause damage to the unit. Ensure system cleanliness when connecting to solar, domestic or potable water systems.

Thoroughly review submittals and product literature detailing unit operation, controls, and connections BEFORE beginning the connection of the various cooling and/or heating mediums to the unit. The supply and return connections are marked with a "HS/CS" meaning Hot/Cold water Supply or inlet and "HR/CR" meaning Hot/Cold water Return or outlet indicating fluid flow direction into and from the coil. Refer to Fig. 16 and 17, and Tables 2 and 3 for hydronic coil details and piping connections. Refer to Fig. 18-21 for unit dimensions.

LEAK TESTING

After securing the connections, test the system for any leaks. Always test hydronic systems with water as some components are not designed to be inert gas pressurized.

Field pressure testing for leaks should not exceed 300 psi for hydronic coil and valve package components. Consult factory if higher limits are required.

CAUTION

Protect all water coils from freezing after initial filling with water. Even if the system is drained, unit coils may still hold enough water to cause damage when exposed to temperatures below freezing.

REFRIGERANT COIL TESTING

Test refrigerant systems with dry nitrogen rather than air to prevent the introduction of moisture into the system. In the event that leaking or defective components are discovered, notify the Sales Representative BEFORE any repairs are attempted. All leaks must be repaired before proceeding with the installation. In DX systems, adequate freeze protection should be field-installed. External equalizer should be installed by others.

PIPING INSULATION

After system integrity has been established, insulate the piping in accordance with the project specifications. This is the responsibility of the installing or insulation contractor.

CONDENSATE DRAIN

Any fan coil unit with a drain pan is recommended to be equipped with a drain trap to provide condensate drainage and prevent property damage.

The drain U-trap should be deep enough to offset maximum unit static pressure difference as shown at Fig. 15, to prevent condensate flowing back to drain pan.

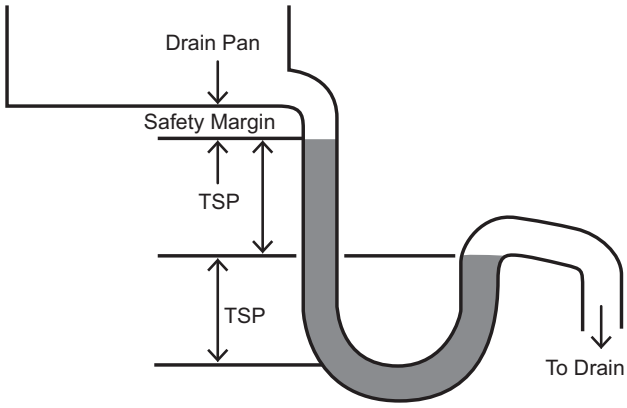

Fig. 15 — Condensate Drain U-Trap

CONDENSATE FLOAT SWITCH

The condensate float switch is used to detect clogged or restricted condensate pan drains. The condensate switch uses a Normally Closed contact to allow the system control power to pass through the switch energizing the water valves and fans allowing normal operation. When an overflow condition is detected by the switch, it opens the NC contacts and de-energizes the water valves and fans.

NOTE: All field wiring must be in accordance with governing codes and ordinances. Any modification of unit wiring without factory authorization will invalidate all factory warranties and nullify any agency listings. The manufacturer assumes no responsibility for any damages and/or injuries resulting from improper field installation and/or wiring.

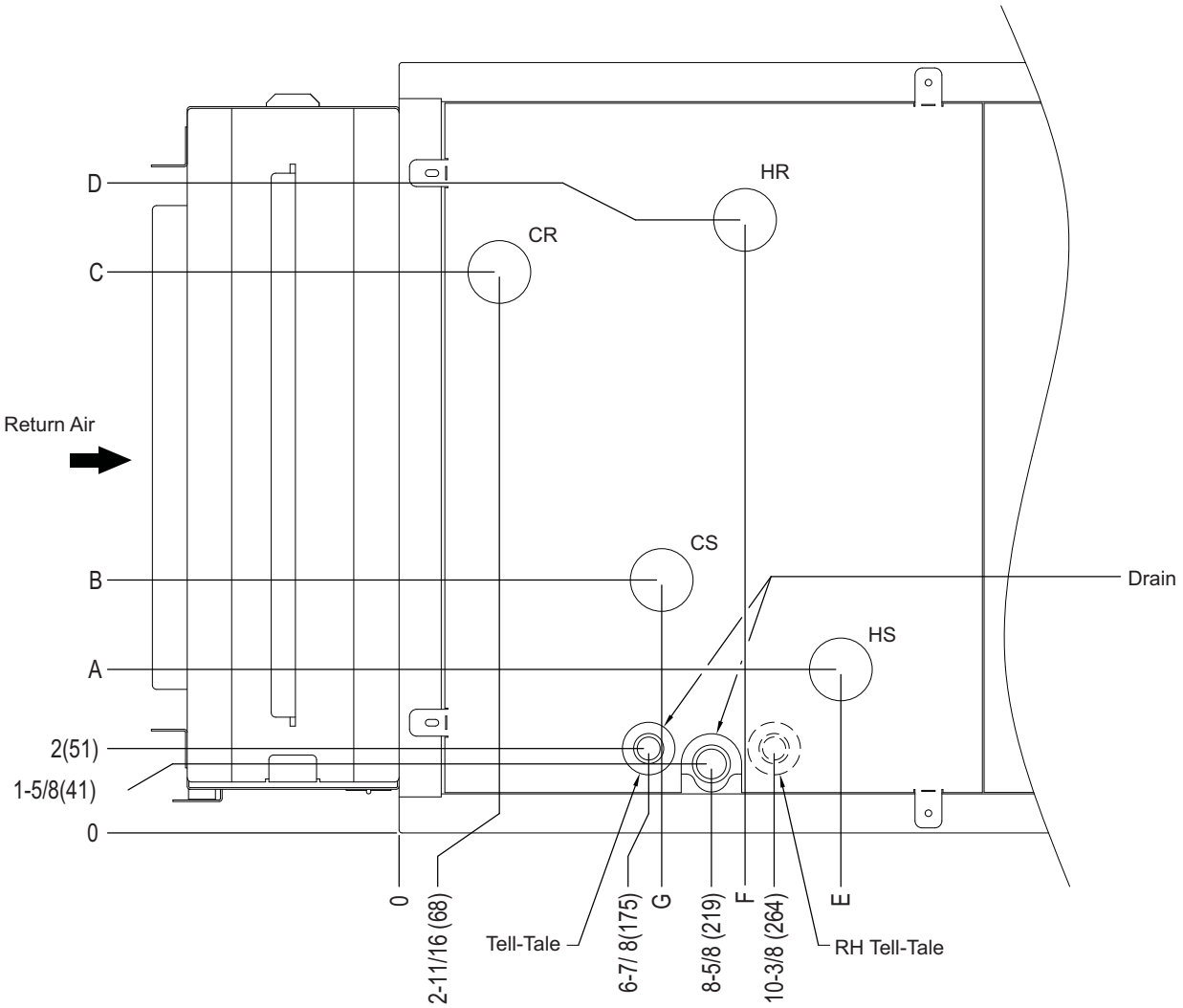

LEGEND
CR — Cold Water Return
CS — Cold Water Supply
HR — Hor Water Return
HS — Hot Water Supply
LH — Left Hand
RH — Right Hand
OD — Outside Dimensions

NOTES: Horizontal, left hand unit with re-heat coil shown. Dimensions in inches (mm).

COIL HEADER CONNECTION SIZE (in.)[a]										
UNIT SIZE	8-ROW		6-ROW		4-ROW		2-ROW HW		1-ROW HW	
	Nominal Size	OD	Nominal Size	OD	Nominal Size	OD	Nominal Size	OD	Nominal Size	OD
06-12	1	1.125	3/4	0.875	3/4	0.875	1/2	0.625	1/2	0.625
16-22	1	1.125	1	1.125	1	1.125	1	1.125	1/2	0.625
30	1-1/2	1.625	1-1/2	1.625	1-1/2	1.625	1-1/2	1.625	1-1/2	1.625

NOTE(S):
a. See table on page 11 for unit size connection locations.

Fig. 16 — 42DH Piping Connection Location (Centerline to Centerline) Hydronic Cooling and Heating Coils

Table 2 — 42DH Hydronic Coil Piping Connections (in.)

UNIT SIZE	COIL ROWS		A	B	C	D	E	F	G
	COOL	HEAT							
06/08	4	—	—	6-1/8	12-3/4	—	—	—	5-15/16
		1	3-1/2			15-1/2	7	7	
		2	3-13/16			15-13/16	7-9/16	7-9/16	
	6	—	—			—	—	—	8-1/8
		1	3-1/2			15-1/2	9-3/16	9-3/16	
		2	3-13/16			15-13/16	9-3/4	9-3/4	
	8	—	—			—	—	—	10-1/4
10/12	4	—	—	7-3/4	14-3/8	—	—	—	5-15/16
		1	5-1/8			17-1/8	7	7	
		2	5-7/16			17-7/16	7-9/16	7-9/16	
	6	—	—			—	—	—	8-1/8
		1	5-1/8			17-1/8	9-3/16	9-3/16	
		2	5-27/61			17-7/16	9-3/4	9-3/4	
	8	—	—			—	—	—	10-1/4
16	4	—	—	7-3/4	15-5/8	—	—	—	5-15/16
		1	LH 10-5/8 RH 13-3/8	7-3/4		12	9-5/8	7	
		2	12	7	16-3/8	13-5/8	10-3/8	7-9/16	
	6	—	—	7-3/4	15-5/8	—	—	—	8-1/8
		1	LH 10-5/8 RH 13-3/8	7-3/4		12	11-13/16	9-3/16	
		2	12	7	16-3/8	13-5/8	12-1/2	9-3/4	
	8	—	—	9-1/2	15-5/8	—	—	—	10-1/4
20/22	4	—	—	7-13/16	18-3/16	—	—	—	5-15/16
		1	LH 11-15/16 RH 14-11/16	7-13/16		13-5/16	9-5/8	7	
		2	11-9/16	7-7/8		15-13/16	9-1/16		5
	6	—	—	7-13/16		—	—	—	8-1/8
		1	LH 11-15/16 RH 14-11/16	7-13/16		13-5/16	11-13/16	9-3/16	
		2	11-9/16	7-7/8		15-13/16	11-1/4		7-1/8
	8	—	—	7-13/16		—	—	—	10-1/4
30	4	—	—	5-15/16	26-5/16	—	—	—	5-15/16
		1	7-1/16			25-13/16	9	7	4-7/8
		2	10-5/16			23-13/16	9-1/8		
	6	—	—			—	—	—	8-1/8
		1	7-1/16			25-13/16	11-1/8	9-1/8	7-1/16
		2	10-5/16			23-13/16	11-5/16		
	8	—	—			—	—	—	10-1/4

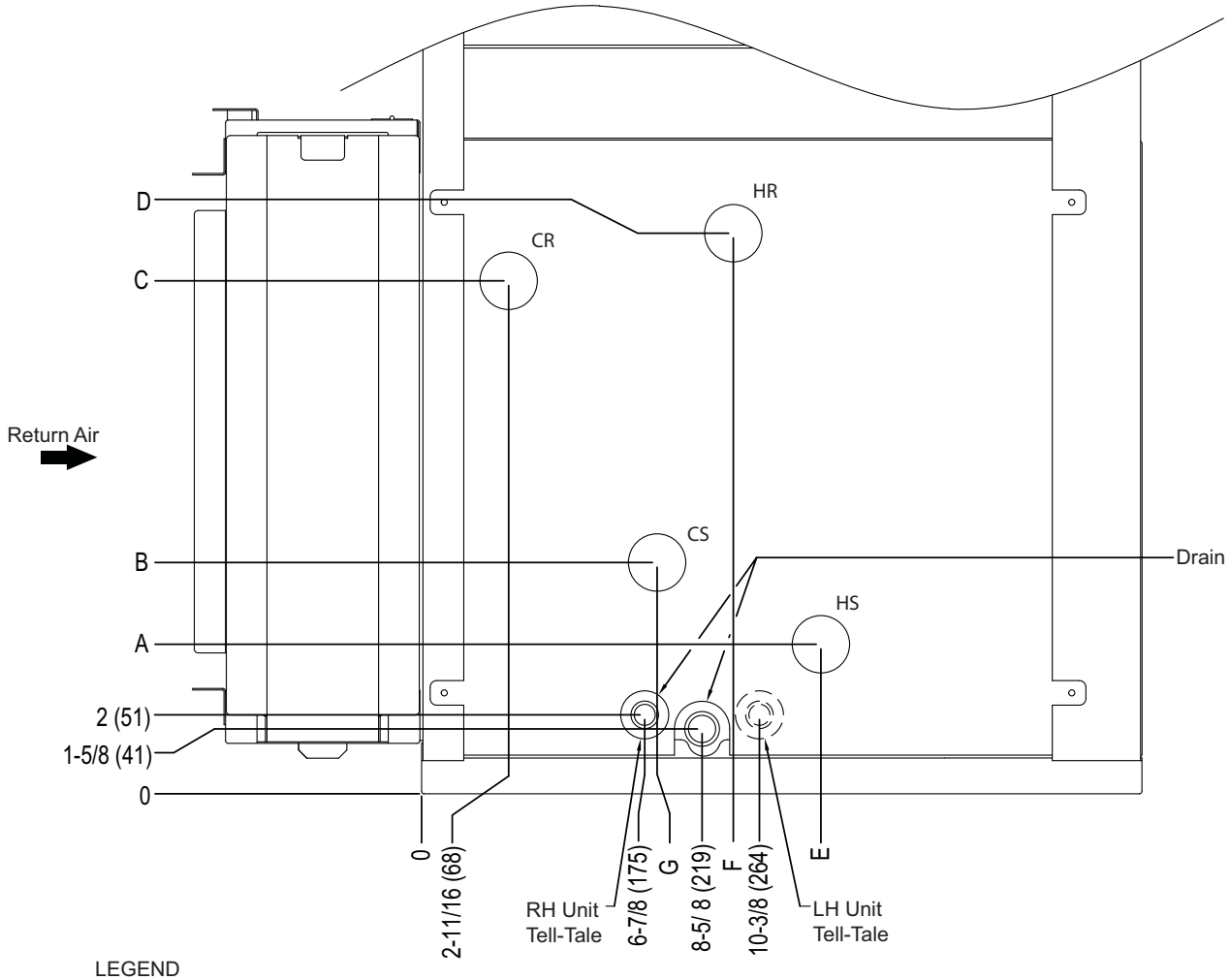

LEGEND
CR — Cold Water Return
CS — Cold Water Supply
HR — Hor Water Return
HS — Hot Water Supply
LH — Left Hand
RH — Right Hand
OD — Outside Dimensions
NOTE: Vertical, right hand unit with re-heat coil shown. Dimensions in inches (mm).

COIL HEADER CONNECTION SIZE (in.)[a]										
UNIT SIZE	8-ROW		6-ROW		4-ROW		2-ROW HW		1-ROW HW	
	Nominal Size	OD	Nominal Size	OD	Nominal Size	OD	Nominal Size	OD	Nominal Size	OD
06-12	1	1.125	3/4	0.875	3/4	0.875	1/2	0.625	1/2	0.625
16-22	1	1.125	1	1.125	1	1.125	1	1.125	1/2	0.625
30	1-1/2	1.625	1-1/2	1.625	1-1/2	1.625	1-1/2	1.625	1-1/2	1.625

NOTE(S):
a. See table on page 13 for unit size connection locations.

Fig. 17 — 42DV Piping Connection Location (Centerline to Centerline) Hydronic Cooling and Heating Coils

Table 3 — 42DV Hydronic Coil Piping Connections (in.)

UNIT SIZE	COIL ROWS		A	B	C	D	E	F	G
	COOL	HEAT							
06/08	4	—	—	6-1/8	12-3/4	—	—	—	5-15/16
		1	3-1/2			15-1/2	7	7	
		2	3-13/16			15-13/16	7-9/16	7-9/16	
	6	—	—			—	—	—	8-1/8
		1	3-1/2			15-1/2	9-3/16	9-3/16	
		2	3-13/16			15-13/16	9-3/4	9-3/4	
	8	—	—			—	—	—	10-1/4
10/12	4	—	—			—	—	—	5-15/16
		1	5-1/8			17-1/8	7	7	
		2	5-7/16			17-7/16	7-9/16	7-9/16	
	6	—	—	7-3/4	14-3/8	—	—	—	8-1/8
		1	5-1/8			17-1/8	9-3/16	9-3/16	
		2	5-27/61			17-7/16	9-3/4	9-3/4	
	8	—	—			—	—	—	10-1/4
16	4	—	—	7-3/4	15-5/8	—	—	—	5-15/16
			LH 10-5/8			—	9-5/8	7	
		1	RH 13-3/8	7-3/4		12	9-5/8	7	
		2	12	7	16-3/8	13-5/8	10-3/8	7-9/16	
	6	—	—	7-3/4	15-5/8	—	—	—	8-1/8
			LH 10-5/8			—	11-13/16	9-3/16	
		1	RH 13-3/8	7-3/4		12	11-13/16	9-3/16	
		2	12	7	16-3/8	13-5/8	12-1/2	9-3/4	
	8	—	—	9-1/2	15-5/8	—	—	—	10-1/4
20/22	4	—	—	7-13/16		—	—	—	5-15/16
		1	LH 11-15/16	7-13/16		13-5/16	9-5/8	7	
			RH 14-11/16						
		2	11-9/16	7-7/8		15-13/16	9-1/16		5
	6	—	—	7-13/16	18-3/16	—	—	—	
		1	LH 11-15/16	7-13/16		13-5/16	11-13/16	9-3/16	8-1/8
			RH 14-11/16						
		2	11-9/16	7-7/8		15-13/16	11-1/4		7-1/8
	8	—	—	7-13/16		—	—	—	10-1/4
30	4	—	—	5-15/16	26-5/16	—	—	—	5-15/16
		1	7-1/16			25-13/16	9		
		2	10-5/16			23-13/16	9-1/8	7	4-7/8
	6	—	—			—	—	—	8-1/8
		1	7-1/16			25-13/16	11-1/8	9-1/8	7-1/16
		2	10-5/16			23-13/16	11-5/16		
	8	—	—			—	—	—	10-1/4

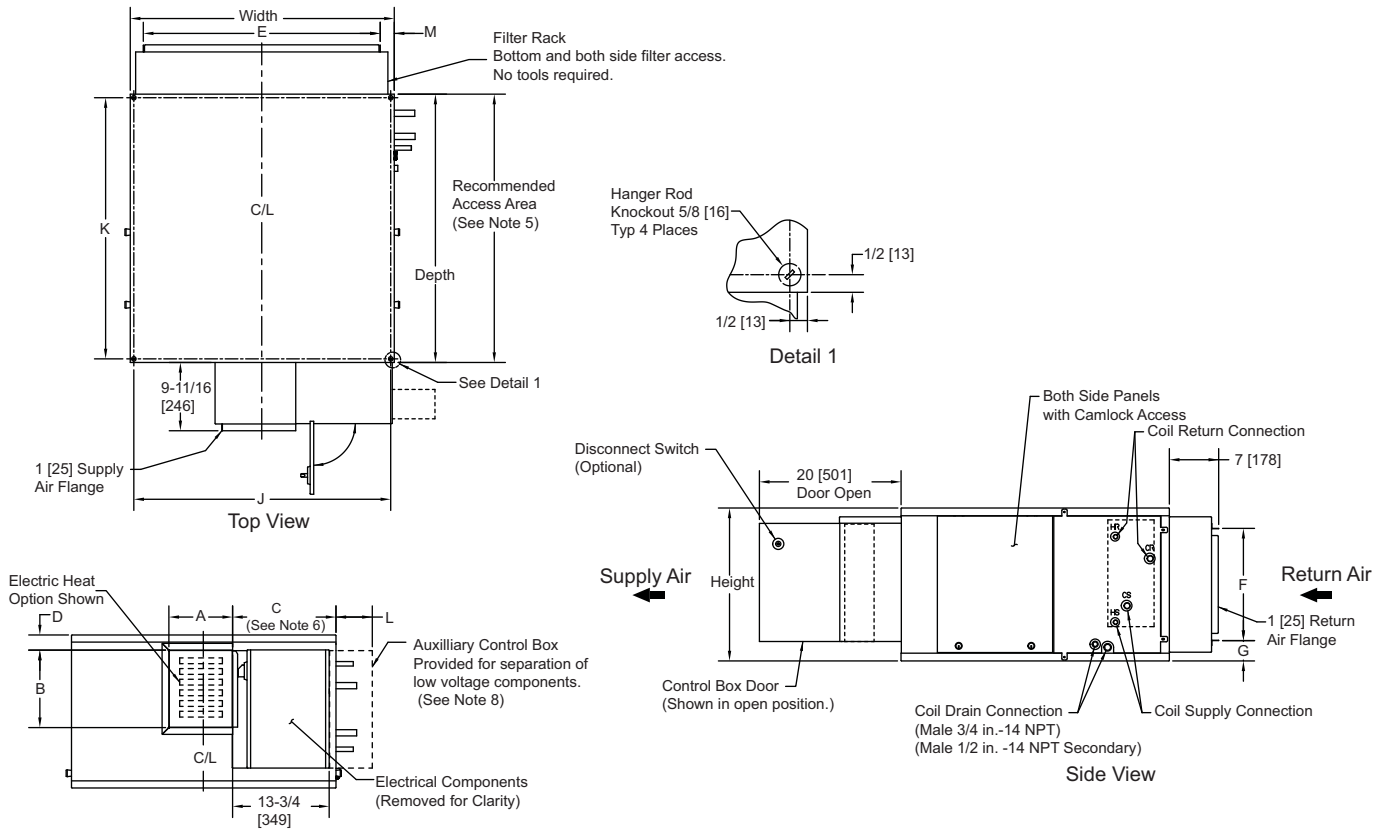

NOTE: Dimensions are in inches [mm].

SIZE	FAN SIZE	DEPTH	WIDTH	HEIGHT	SUPPLY DUCT FLANGES				RETURN DUCT FLANGES			MOUNTING HOLES		AUXILIARY CONTROL BOX	M
					A	B	C	D	E	F	G	J	K	L	
06	9x6	36 [914]	28 [711]	19-3/4 [502]	8-7/8 [225]	10-7/8 [276]	13-3/4 [349]	2-1/4 [57]	24 [610]	16-1/2 [419]	1 [25]	27-1/4 [686]	35-1/4 [895]	5-3/4 [146]	2 [51]
08	9x6	36 [914]	28 [711]	19-3/4 [502]	8-7/8 [225]	10-7/8 [276]	13-3/4 [349]	2-1/4 [57]	24 [610]	16-1/2 [419]	1 [25]	27-1/4 [686]	35-1/4 [895]	5-3/4 [146]	2 [51]
10	9x6	37-1/2 [953]	37 [940]	21-1/2 [546]	10-1/4 [260]	10-7/8 [276]	14-1/2 [368]	2-1/4 [57]	33 [838]	18-1/4 [464]	1 [25]	36-1/4 [921]	37 [940]	5 [124]	2 [51]
12	9x6	37-1/2 [953]	37 [940]	21-1/2 [546]	10-1/4 [260]	10-7/8 [276]	14-1/2 [368]	2-1/4 [57]	33 [838]	18-1/4 [464]	1 [25]	36-1/4 [921]	37 [940]	5 [124]	2 [51]
16	10x7	37-3/4 [959]	47 [1194]	21-1/2 [546]	13 [330]	12 [305]	18-3/8 [467]	2-1/4 [57]	43 [1092]	18-3/4 [527]	1 [25]	46-1/4 [1175]	37 [940]	1-1/4 [32]	1-1/2 [38]
20	11x10	40-1/4 [1022]	48 [1219]	24 [610]	16-1/4 [413]	13 [330]	17-1/4 [438]	2-1/4 [57]	44 [1118]	20-3/4 [527]	1 [25]	47-1/4 [1200]	39-1/2 [1033]	2-3/8 [60]	2 [51]
22															
30	12x12	40-1/4 [1022]	48 [1219]	32-1/4 [819]	16-1/4 [413]	14 [356]	16 [406]	7-1/8 [181]	44 [1118]	29 [737]	1 [25]	47-1/4 [1200]	39-1/2 [1033]	3-3/4 [95]	2 [51]

NOTES:
1. Right hand unit shown; left hand unit opposite.
2. Dimensions are in inches [mm].
3. All dimensions are ± .25 in. [6 mm].
4. Product specifications are subject to changes without notice.
5. Allow adequate spacing or maneuverability around unit to allow service through recommended access area.
6. “C” dimension is measured from coil side of unit.
7. Mixing box option will vary return duct dimensions, refer to mixing box drawing.
8. Auxiliary control box required with 3-speed EC motors and/or cabinet lighting option, not required with low voltage (0-10v) controls.

Fig. 18 — 42DHA Horizontal Direct Drive

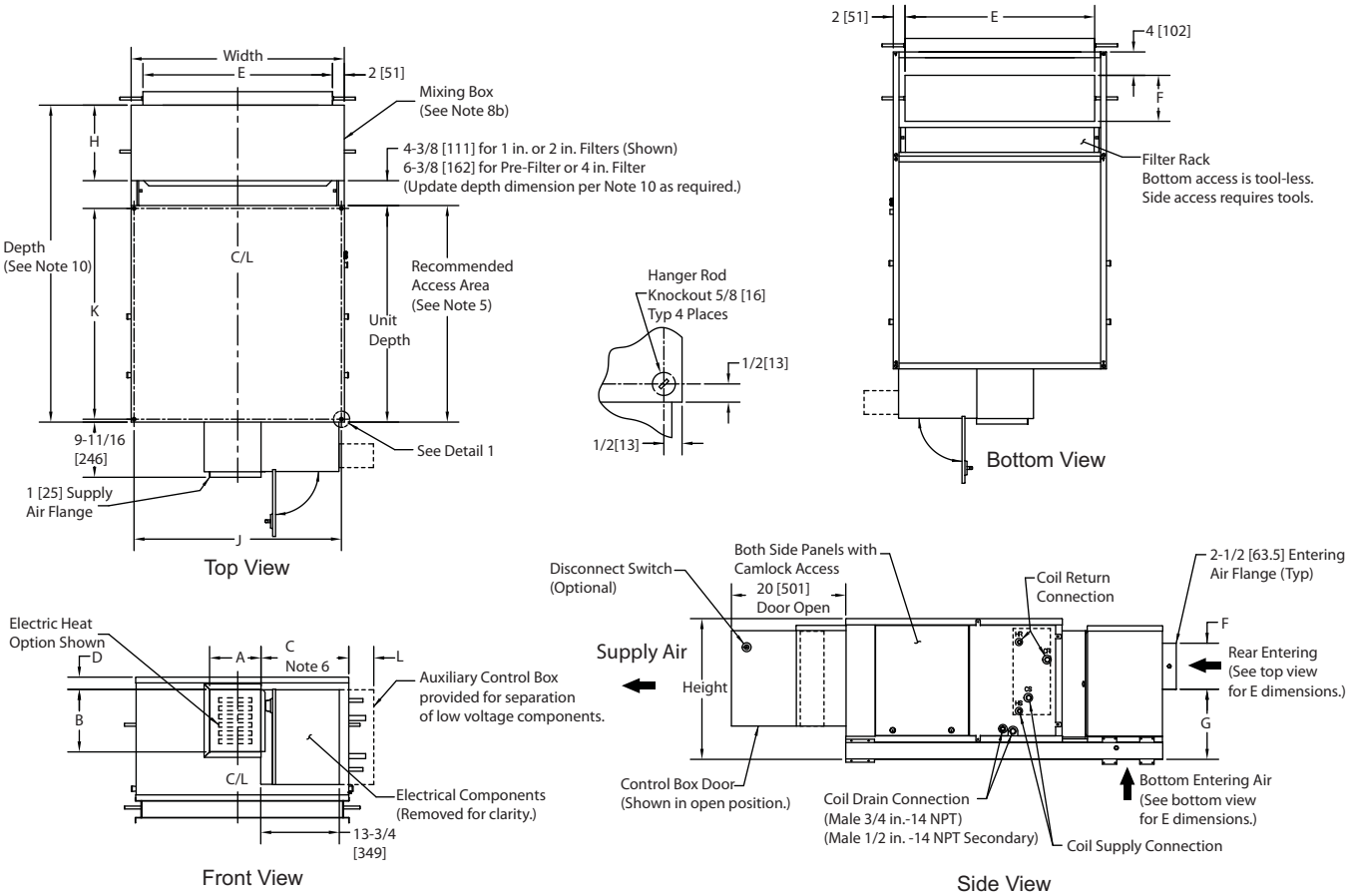

NOTE: Dimensions are in inches [mm].

SIZE	FAN SIZE	DEPTH	UNIT DEPTH	WIDTH	HEIGHT	SUPPLY DUCT				RETURN DUCT			MIX BOX	MOUNTING HOLES		AUXILIARY BOX
						A	B	C	D	E	F	G	H	J	K	L
06	9x6	51-5/8 [1311]	36 [914]	28 [711]	22-3/4 [578]	8-7/8 [225]	10-7/8 [276]	13-3/4 [349]	2-1/4 [57]	24 [610]	6 [152]	12-1/2 [318	11 [279]	27-1/4 [686]	35-1/4 [895]	5-3/4 [146]
08	9x6	51-5/8 [1311]	36 [914]	28 [711]	22-3/4 [578]	8-7/8 [225]	10-7/8 [276]	13-3/4 [349]	2-1/4 [57]	24 [610]	6 [152]	12-1/2 [318]	11 [279]	27-1/4 [686]	35-1/4 [895]	5-3/4 [146]
10	9x6	55-1/8 [1400]	37-1/2 [953]	37 [940]	24-1/2 [622]	10-1/4 [260]	10-7/8 [276]	14-1/2 [368]	2-1/4 [57]	33 [838]	8 [203]	14-1/4 [362]	13 [330]	36-1/4 [921]	37 [940]	5 [124]
12	9x6	55-1/8 [1400]	37-1/2 [953]	37 [940]	24-1/2 [622]	10-1/4 [260]	10-7/8 [276]	14-1/2 [368]	2-1/4 [57]	33 [838]	8 [203]	14-1/4 [362]	13 [330]	36-1/4 [921]	37 [940]	5 [124]
16	10x7	55-3/8 [1407]	37-3/4 [959]	47 [1194]	24-1/2 [622]	13 [330]	12 [305]	18-3/8 [467]	2-1/4 [57]	43 [1092]	8 [203]	14-1/4 [362]	13 [330]	46-1/4 [1175]	37 [940]	1-1/4 [32]
20	11x10	57-3/4 [1467]	40-1/4 [1022]	48 [1219]	27 [686]	16-1/4 [413]	13 [330]	17-1/4 [438]	2-1/4 [57]	44 [1118]	8 [203]	16-3/4 [425]	13 [330]	47-1/4 [1200]	39-1/2 [1033]	2-3/8 [60]
22																
30	12x12	59-3/4 [1518]	40-1/4 [1022]	48 [1219]	35-1/4 [895]	16-1/4 [413]	14 [356]	16 [406]	7-1/8 [181]	44 [1118]	10 [254]	15 [381]	15 [381]	47-1/4 [1200]	39-1/2 [1033]	3-3/4 [95]

NOTES:

1. Right hand unit shown; left hand unit opposite.
2. All dimensions are ± .25 in. [6 mm].
3. Product specifications are subject to changes without notice.
4. Dimensions are in inches [mm].
5. Allow adequate spacing or maneuverability around unit to allow service through recommended access area.
6. “C” dimension is measured from coil side of unit.
7. Mixing box option will vary return duct dimensions, refer to mixing box drawing.
8. Mixing box option includes: a) knockdown base rails for field assembly; which are letter coded for ease of assembly. All assembly hardware included. b) pre-assembled mixing box.
9. Linkage kit supplied with Mixing Box is provided for field installation of actuator, consisting of 2 crank arms, 2 swivels, and either a 25 in. (sizes 06-16) or 34 in. (sizes 20-40) length of 5/16 in. Rod.
10. Add 2 in. [51] if using a prefilter or 4 in. [102] filter.

Fig. 19 — 42DHA Horizontal Direct Drive with Optional Mixing Box

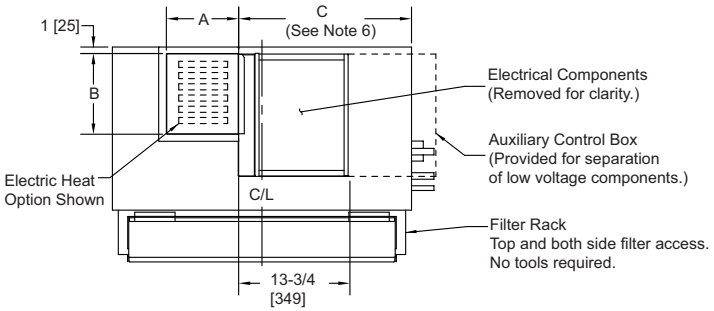

Top View

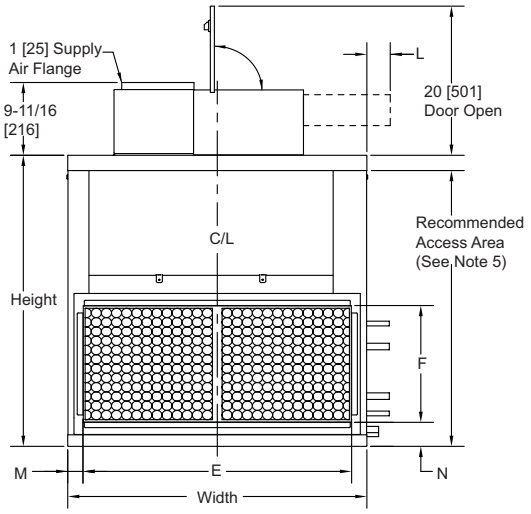

Front View

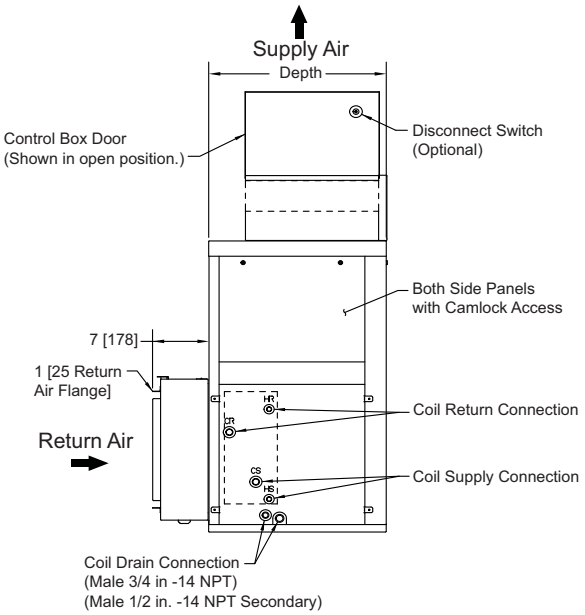

Side View

NOTE: Dimensions are in inches [mm].

SIZE	FAN SIZE	DEPTH	WIDTH	HEIGHT	SUPPLY DUCT			RETURN DUCT		AUXILIARY CONTROL BOX	UNIT SIDE TO DUCT FLANGE	UNIT BOTTOM TO DUCT FLANGE
					A	B	C	E	F	L	M	N
06	9x6	20 [508]	28 [711]	36-1/2 [927]	8-7/8 [225]	10-7/8 [276]	15-1/8 [384]	24 [610]	16-1/2 [419]	4-1/2 [114]	1-7/8 [48]	2-7/8 [73]
08	9x6	20 [508]	28 [711]	36-1/2 [927)	8-7/8 [225]	10-7/8 [276]	15-1/8 [384]	24 [610]	16-1/2 [419]	4-1/2 [114]	1-7/8 [48]	2-7/8 [73]
10	9x6	22 [559]	37 [940]	39-3/8 [1000]	10-1/4 [260]	10-7/8 [276]	21-1/2 [546]	33 [838]	18-1/4 [464]	0 [0]	1-7/8 [48]	2-7/8 [73]
12	9x6	22 [559]	37 [940]	39-3/8 [1000]	10-1/4 [260]	10-7/8 [276]	21-1/2 [546]	33-1/4 [838]	18-1/4 [464]	0 [0]	1-7/8 [48]	2-7/8 [73]
16	10x7	22 [559]	47 [1194]	39-3/8 [1000]	13 [330]	12 [305]	16-5/8 [422]	43 [1092]	18-1/4 [464]	3[76]	1-5/8 [48]	2-7/8 [73]
20/22	11x10	24 [610]	48 [1219]	45-1/8 [1146]	16-1/4 [413]	13 [330]	17-1/8 [435]	44 [1118]	20-3/4 [527]	2-1/2 [64]	1-7/8 [48]	3-1/8 [79]
30	12x12	28 [711]	48 [1219]	54-1/4 [1378]	16-1/4 [413]	14 [356]	16 [406]	44 [1118]	29 [737]	3-5/8 [92]	1-7/8 [48]	2-3/4 [70]

NOTES:

1. Right hand unit shown; left hand unit opposite.
2. Dimensions are in inches [mm].
3. Product specifications are subject to changes without notice.
4. All dimensions are ± .25 in [6 mm].
5. Allow adequate spacing or maneuverability around unit to allow service through recommended access area.
6. “C” dimension is measured from coil side of unit.
7. Mixing box option will vary return duct dimensions, refer to mixing box drawing.

Fig. 20 — 42DVA Vertical Direct Drive

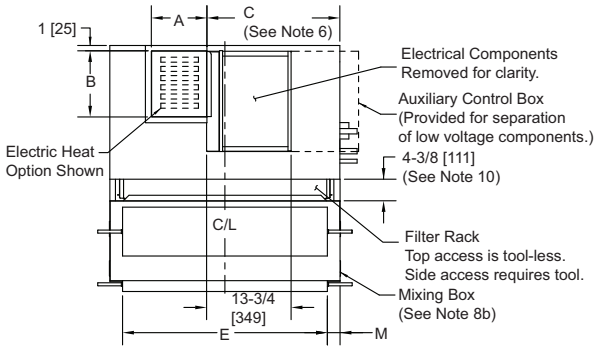

Top View

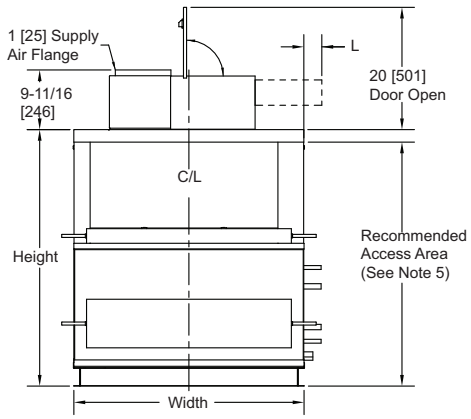

Front View

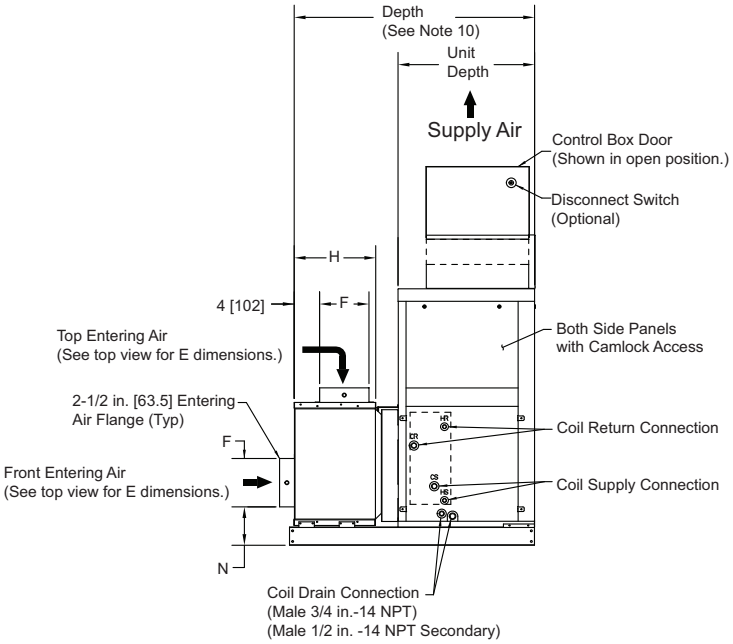

Side View

NOTE: Dimensions are in inches [mm].

SIZE	FAN SIZE	DEPTH	UNIT DEPTH	WIDTH	HEIGHT	SUPPLY DUCT			RETURN DUCT		MIX BOX	AUXILIARY BOX	UNIT SIDE TO DUCT FLANGE	UNIT BOTTOM TO DUCT FLANGE
						A	B	C	E	F	H	L	M	N
06	9x6	35-1/2 [902]	20 [508]	28 [711]	36-1/2 [927]	8-7/8 [225]	10-7/8 [276]	15-1/8 [384]	24 [610]	6 [152]	11 [279]	4-1/2 [114]	1-7/8 [48]	2-7/8 [73]
08	9x6	35-1/2 [902]	20 [508]	28 [711]	36-1/2 [927]	8-7/8 [225]	10-7/8 [276]	15-1/8 [384]	24 [610]	6 [152]	11 [279]	4-1/2 [114]	1[25]	2-7/8 [73]
10	9x6	39-1/2 [1003]	22 [559]	37 [940]	39-3/8 [1000]	10-1/4 [260]	10-7/8 [276]	21-1/2 [546]	33 [838]	8 [203]	13 [330]	0 [0]	1-7/8 [48]	2-7/8 [73]
12	9x6	39-1/2 [1003]	22 [559]	37 [940]	39-3/8 [1000]	10-1/4 [260]	10-7/8 [276]	21-1/2 [546]	33 [838]	8 [203]	13 [330]	0 [0]	1-7/8 [48]	2-7/8 [73]
16	10x7	39-1/2 [1003]	22 [559]	47 [1194]	39-3/8 [1000]	13 [330]	12 [305]	16-5/8 [422]	43 [1092]	8 [203]	13 [330]	3 [76]	1-5/8 [41]	2-7/8 [73]
20/22	11x10	41-1/2 [1054]	24 [610]	48 [1219]	45-1/8 [1146]	16-1/4 [413]	13 [330]	17-1/8 [435]	44 [1118]	8 [203]	13 [330]	2-1/2 [64]	1-7/8 [48]	3-1/8 [79]
30	12x12	47-1/2 [1207]	28 [711]	48 [1219]	54-1/4 [1378]	16-1/4 [413]	14 [356]	16 [406]	44 [1118]	10 [254]	15 [381]	3-5/8 [92]	1-7/8 [48]	2-7/8 [73]

NOTES:

1. Right hand unit shown; left hand unit opposite.
2. Dimensions are in inches [mm].
3. Product specifications are subject to changes without notice.
4. All dimensions are ± .25 in. [6 mm].
5. Allow adequate spacing or maneuverability around unit to allow service through recommended access area.
6. “C” dimension is measured from coil side of unit.
7. Mixing box option will vary return duct dimensions, refer to mixing box drawing.
8. Mixing box option includes: a) knockdown base rails which are letter-coded for field assembly, all assembly hardware included; b) pre-assembled mixing box.
9. Linkage kit supplied with mixing box is provided for field installation of actuator. Kit consists of 2 crank arms, 2 swivels, and either a 25 in. (sizes 06-16) or 34 in.(sizes 20-30) length of 5/16 in. rod.
10. Add 2 in. if using a prefilter or 4 in. filter.

Fig. 21 — 42DVA Vertical Direct Drive with Optional Mixing Box

Step 4 — Make Electrical Connections

The unit serial plate lists the unit electrical characteristics including the required supply voltage, fan and heater amperage and required circuit ampacity. The unit wiring diagram displays all unit and field wiring. Every project is different and each unit on a project may be different, the installer must be familiar with the wiring diagram and serial plate on the unit BEFORE beginning any wiring.

Ensure all field electrical connections are in accordance with unit wiring diagram and all applicable national and local code. The type and size of all wiring and other electrical components including circuit breakers, disconnect switches, etc. shall be determined by the individual job requirements. Verify conductor size is suitable for the distance to the equipment connection and will support the equipment electrical load. All installations including field wiring shall be made in compliance with all governing codes and ordinances. Compliance with all codes is the responsibility of the installing contractor.

All components furnished for field installation by either the factory or the controls contractor shall be located and checked for proper function and compatibility. Inspect all internal components for shipping damage. Inspect all electrical connections within the unit control box and accessories and tighten if necessary.

NOTE: All field wiring must be in accordance with governing codes and ordinances. Any modification of unit wiring without factory authorization will invalidate all factory warranties and nullify any agency listings. The manufacturer assumes no responsibility for any damages and/or injuries resulting from improper field installation and/or wiring.

Step 5 — Ductwork Connection

All ductwork shall be installed in accordance with the project plans and specifications. See Fig. 18-21 for supply and return duct flanges location and dimensions.

NOTE: When installing units that attach to branch duct piping, use industry approved duct standards and configuration such as those published by Air Conditioning Contractors of America (ACCA) or American Society of Heating, Refrigeration and Air Conditioning Engineers (ASHRAE). The standards provide necessary information on sizing, layout and installing supply and return air duct systems.

Flexible duct connections should be used on all air handling equipment. All ductwork and insulation shall be installed to allow proper access to all components for service and repair such as filters, motor/blower assemblies, etc.

Step 6 — Make Final Preparations

1. Power unit(s) off (open unit electrical disconnect) and install lockout tags on all power supplies to the unit.
2. Install field-supplied thermostats and perform all other final wiring needed. Ensure all electrical connections are secure.
3. Perform final visual inspection. All equipment, ductwork, and piping should be inspected to verify all systems are complete and properly installed and mounted, and that no debris or foreign articles are left in the unit(s). Clean dirt, dust, and other construction debris from unit interior. Assess fan wheel and housing and clean if necessary.
4. Verify drain line is properly and securely positioned and that the line is clear. Pour water into drain to verify operation.
5. Rotate fan wheel by hand to be sure it is free and does not rub housing.
6. Install the filter into the filter frame. If field-supplied filters are used, verify filter size (see Filter Sizes table on page 23).
7. Ensure all panels and filters are installed before checking fan operation. Turn on power to the unit.
8. Inspect the fan and motor operation.

START-UP

Before beginning any start-up operation, the start-up personnel shall familiarize themselves with the unit, options and accessories, and control sequence to understand the proper system operation. All personnel shall have a good working knowledge of general start-up procedures and have the appropriate start-up and balancing guides available for consultation.

The building must be completely finished including doors, windows, and insulation. All internal walls and doors should be installed. In some cases, the interior decorations and furniture may influence overall system performance. The entire building should be as complete as possible before beginning any system balancing.

Cooling/Heating System

Prior to the water system start-up and balancing, flush the chilled/hot water systems to clean out dirt and debris which may have collected in the piping during construction. During this procedure, all unit service valves must be in the closed position to prevent foreign matter from entering the unit and clogging the valves and metering devices. Strainers shall be installed in the piping mains to prevent such material from entering units during normal operation.

During system filling, air venting from the unit is accomplished by the use of the standard, manual air vent fitting, or the optional, automatic air vent fitting installed on the coil. (See Fig. 22.) Manual air vents are basic Schrader valves that could be accessed from the coil side of the unit and are located between the coil header and end sheet. To vent the air from the coil, depress the valve until the air has vented the coil. When water begins to escape through the valve, release the valve.

Automatic air vents may be unscrewed one turn counterclockwise to speed initial venting, but should be screwed in for automatic venting after start-up operations.

Fig. 22 — Air Vents

⚠ CAUTION

The air vent provided on the unit is not intended to replace the main system air vents and may not release air trapped in other parts of the system. Independently inspect the entire system for potential air traps and vent those areas as required. In addition, some systems may require repeated venting over a period of time to properly eliminate air from the system.

Direct Expansion (DX) Systems

NOTE: Operation of DX equipped fan coils at any fan speed other than high fan speed is not approved and will void the manufacturer's limited warranty.

IMPORTANT: 42DH/42DV is a partial unit and shall only be connected to an appliance suitable for the same refrigerant.

IMPORTANT: 42DH/42DV is a PARTIAL UNIT AIR CONDITIONER, complying with PARTIAL UNIT requirements of Standard UL 60335-2-40 / CSA C22.2 No. 60335-2-40, or UL 60335-2-40/CSA C22.2 No. 235. The unit must only be connected to other units that have been confirmed as also complying with these requirements.

IMPORTANT: Do not operate fan coils with a DX evaporator coil plus contiguous hydronic coil without use of a suitable glycol solution that is approved for use by the manufacturer. Failure to follow this instruction will void the manufacturer's limited warranty.

IMPORTANT: Should the evaporator freeze due to inadequate airflow for any reason, damage may occur to adjacent water or steam coil tubing. This type of issue is due to product misapplication and voids the manufacturer's limited warranty.

Air Balance System

All ductwork must be complete and connected. All filters and access doors and panels must be properly installed to establish actual system operating conditions BEFORE beginning air balancing operations.

Each individual unit and the attached ductwork is a unique system with its own operating characteristics. For this reason, air balancing is normally done by balance specialists who are familiar with all procedures required to properly establish air distribution and fan-system operating conditions. These procedures shall not be attempted by unqualified personnel.

After proper system operation is established, the actual unit air delivery and the actual fan motor amperage draw for each unit should be recorded in a convenient place for future reference.

Control Board Adjustment

Adjusting the low, medium and high potentiometer requires the use of multi-meter capable of measuring 0-10 vdc. (See Fig. 23.) For control box layout see Fig. 24.

⚠ CAUTION

Only trained and qualified individuals should attempt to adjust or service components on any energized electrical equipment. Failure to follow established safety rules and guidelines could result in serious injury or death.

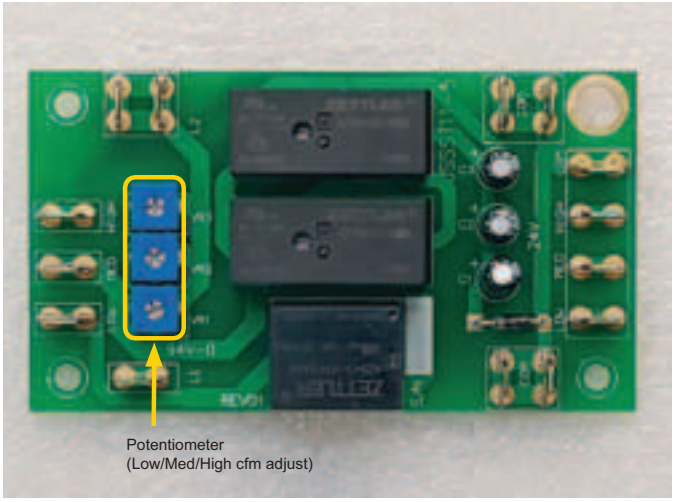

Fig. 23 — Motor Control Board

When the 42DH/DV unit is shipped from the factory with motor control board (which has High, Med and Low airflow settings), it is pre-programmed at the factory to "High" speed and delivers the airflow and cooling/heating capacity specified at the time of order, while Medium and Low speeds are set to defaults based on High speed. Should airflow require adjustment after installation, the control board settings for Low, Medium and High could be adjusted by turning screws (as shown in Fig. 23) using a small Phillips screwdriver. It will adjust the control voltage to the motor. A clockwise rotation increases the voltage to the motor, while counter clockwise rotation reduces it.

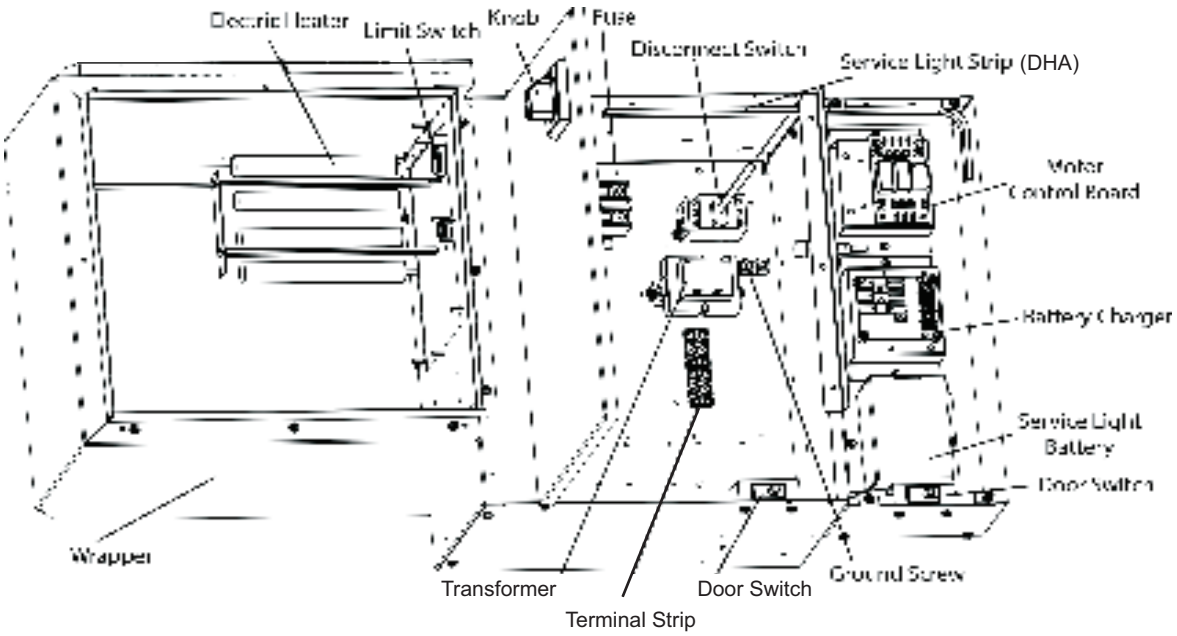

Fig. 24 — Control Box Layout

⚠ CAUTION

On 42DH/DV units with electric heat the factory default setting for low airflow prevents nuisance tripping of the electric heat protection circuit. Turning the low speed screw counter clockwise can cause interruptions in the heating performance of the unit due to the activation of this protective circuit.

When unit is ordered with Proportional Control, IEC Ratings Program will identify the High and Low speed control voltage range in which to program the Thermostat/Controller.

⚠ CAUTION

Turning the voltage up past the setting for high speed may introduce the risk of condensate blow off which may result in damage to the unit.

Unit must be powered to perform the following procedure. Set the electrical multimeter to VDC (Volts Direct Current). Attach the RED positive (+) lead of the meter to the DC OUTPUTS. LOW, MED, and HIGH are typically connected together.

1. Close either the low, MED, and HIGH speed relay contacts by applying 24 vac to the corresponding LOW, MED and HIGH 24 vac INPUT and COM.
2. Measure voltage at the DC OUTPUTS and adjust the potentiometer for that speed. (VR1 LOW, VR2 MED, VR3 HIGH)
3. In order to achieve higher cfm, turn the potentiometer clockwise.

NOTE: For specific voltages adjustment please contact Carrier factory representative.

Water Balancing System

A complete knowledge of the hydronic system, along with its components and controls, is essential to proper water system balancing. This procedure shall not be attempted by unqualified personnel. The system must be complete, and all components must be in operating condition BEFORE beginning water system balancing operations.

Each hydronic system has different operating characteristics depending on the devices and controls used in the system. The actual balancing technique may vary from one system to another.

After the proper system operation is established, record the appropriate system operating conditions such as various water temperatures and flow rates in a convenient place for future reference.

Before, and during water system balancing, conditions may exist due to incorrect system pressures which may result in noticeable water noise or undesirable valve operation. After the entire system is balanced, these conditions will not exist on properly designed systems.

Water Treatment

Proper water treatment is a specialized industry. Carrier recommends consulting a water treatment expert to analyze water for compliance with water quality parameters listed below, and to recommend an appropriate water treatment regimen. Water treatment experts are able to recommend typical additives such as rust inhibitors, scaling preventative, antimicrobial growth agents, or algae preventatives. Anti-freeze solutions may also be used to lower the freezing point.

Carrier water coil tubes and headers are constructed of copper. Multiple brass alloys may be present in the valve package. It is the user's responsibility to ensure tube and piping materials furnished by Carrier are compatible with treated water. (See Table 4.) Failure to provide proper water quality may affect the fan coil units' warranty.

Table 4 — Water Quality Parameters

WATER CONTAINING	REQUIRED CONCENTRATION
Sulphate	Less than 200 ppm
pH	7.0-8.5
Chlorides	Less than 200 ppm
Nitrate	Less than 100 ppm
Iron	Less than 4.5 mg/l
Ammonia	Less than 2.0 mg/l
Manganese	Less than 0.1 mg/l
Dissolved Solids	Less than 1000 mg/l
CaCO3 Hardness	300-500 ppm
CaCO3 Alkalinity	300-500 ppm
Particulate Quantity	Less than 10 ppm
Particulate Size	800 micron max

Electronically Commutated Motor (ECM)

All 42DHA units are equipped with Electronically Commutated Motors (ECM) — constant speed brushless DC, which are easily adjustable in the field for desired performance. Motors are pre-programmed for constant speed mode. 1/2 HP and 1 HP motors have integrated control module with overload and short circuit protection. 1-1/2 HP and 3 HP motors have remote mounted control module with overload and short circuit protection. Control module is mounted in the cabinet interior.

SERVICE AND MAINTENANCE

General

Each unit has an individual operating environment and conditions that dictate its maintenance schedule. A formal schedule of regular maintenance and an individual unit log should be established and maintained. This will achieve maximum performance and preserve the service life of each unit.

Observe and adhere to all safety precautions contained in the preface of this manual during all service and maintenance operations.

For more detailed information of service operations consult a Carrier Sales Representative or the factory.

Motor/Blower Assembly

⚠ WARNING

Failure to follow this warning could result in personal injury or death. Please wait 5 minutes after disconnecting power before opening the motor.

Fan operation type is determined by the control components and their method of wiring. This may vary from unit to unit. Refer to the wiring diagram attached to each unit for individual operating characteristics and Fig. A-U in Appendix A starting on page 26 for the typical wiring diagram examples. See Tables 5-7 for motor performance and heater availability.

All motors have permanently lubricated ball bearings. No field lubrication is required.

Should the motor/blower assembly require service, it may be removed from unit to facilitate operations such as motor or blower wheel/housing replacement, etc.

Dirt and dust must not be allowed to accumulate on blower wheel or housing. This can result in an unbalanced blower wheel condition which will damage a blower wheel or motor. The wheel and housing must be cleaned periodically using a vacuum cleaner and a brush taking care not to dislodge factory balancing weights on the blower wheel blades.

Table 5 — Motor Performance Data (Full Load Amps)[a,b]

MOTOR TYPE	VOLTAGE V-PH-Hz	42DH/DV UNIT SIZE			
		06, 10	08, 12, 16, 20	22	30
		MOTOR HORSEPOWER AND FLA (HP)			
		1/2	1	1-1/2	3
1-PHASE SINGLE SPEED STANDARD EFFICIENCY	115/1/50-60	6.40	10.70	N/A	N/A
	208/1/50-60	3.80	6.30	N/A	N/A
	230/1/50-60	3.60	5.80	N/A	N/A
	277/1/50-60	3.20	5.10	N/A	N/A
3-PHASE SINGLE SPEED STANDARD EFFICIENCY	208/3/50-60	2.00	3.70	4.4	8.9
	230/3/50-60	1.85	3.30	4.4	8.9
	460/3/50-60	1.00	1.75	2.2	4.4

NOTE(S):

a. Motor Full Load amps refer to National Electric Code (NEC) amps; actual motor nameplate amps may vary.
b. Motors are UL recognized, constant speed brushless DC type, open drip proof, ball bearing, multi-voltage options, 0-10v control.

Table 6 — Single Phase Electric Heater Availability[a,b]

kW	ELECTRIC HEATER AMPS				42DH/DV UNIT SIZE (HEATER STAGES)											
	SINGLE PHASE (1 OR 2 STAGE)				06		08		10		12		16		20	
	120v	208v	240v	277v	1 stg	2 stg	1 stg	2 stg	1 stg	2 stg	1 stg	2 stg	1 stg	2 stg	1 stg	2 stg
1.0	8.3	4.8	4.2	3.6	X	—	X	—	—	—	—	—	—	—	—	—
1.5	12.5	7.2	6.3	5.4	X	—	X	—	X	—	X	—	—	—	—	—
2.0	16.7	9.6	8.3	7.2	X	—	X	—	X	—	X	—	—	—	—	—
2.5	20.8	12.0	10.4	9.0	X	—	X	—	X	—	X	—	X	—	—	—
3.0	25.0	14.4	12.5	10.8	X	X	X	X	X	X	X	X	X	X	—	—
3.5	29.2	16.8	14.6	12.6	X	X	X	X	X	X	X	X	X	X	X	X
4.0	33.3	19.2	16.7	14.4	X	X	X	X	X	X	X	X	X	X	X	X
4.5	37.5	21.6	18.8	16.2	X	X	X	X	X	X	X	X	X	X	X	X
5.0	—	24.0	20.8	18.1	X	X	X	X	X	X	X	X	X	X	X	X
6.0	—	28.8	25.0	21.7	X	X	X	X	X	X	X	X	X	X	X	X
7.0	—	33.7	29.2	25.3	—	—	X	X	X	X	X	X	X	X	X	X
8.0	—	38.5	33.3	28.9	—	—	X	X	X	X	X	X	X	X	X	X
9.9	—	—	—	35.7	—	—	—	—	X	X	X	X	X	X	X	X
12.0	—	—	—	43.3	—	—	—	—	—	—	X	X	X	X	X	X

NOTE(S):

a. Electric Heating Capacities BTUh) = Heater kW x 3413.
b. Electric Heater Amperage for Single-phase Power = (Heater kW x 1000)/Applied Voltage.

LEGEND

X — Available Option
— — Not Available

Table 7 — Three Phase Electric Heater Availability[a,b]

kW	ELECTRIC HEATER AMPS THREE PHASE (1, 2 OR 3 STAGE)			UNIT SIZE (HEATER STAGES)																	
				06		08		10		12			16			20/22			30		
	208v	240v	480v	1 stg	2 stg	1 stg	2 stg	1 stg	2 stg	1 stg	2 stg	3 stg	1 stg	2 stg	3 stg	1 stg	2 stg	3 stg	1 stg	2 stg	3 stg
1.0	2.8	2.4	1.2	X	—	X	—	—	—	—	—	—	—	—	—	—	—	—	—	—	—
1.5	4.2	3.6	1.8	X	—	X	—	X	—	X	—	—	—	—	—	—	—	—	—	—	—
2.0	5.6	4.8	2.4	X	—	X	—	X	—	X	—	—	—	—	—	—	—	—	—	—	—
2.5	6.9	6.0	3.0	X	—	X	—	X	—	X	—	—	X	—	—	—	—	—	—	—	—
3.0	8.3	7.2	3.6	X	—	X	—	X	—	X	—	—	X	—	—	—	—	—	—	—	—
3.5	9.7	8.4	4.2	X	—	X	—	X	—	X	—	—	X	—	—	X	—	—	—	—	—
4.0	11.1	9.6	4.8	X	X	X	X	X	X	X	X	—	X	X	—	X	X	—	—	—	—
4.5	12.5	10.8	5.4	X	X	X	X	X	X	X	X	—	X	X	—	X	X	—	—	—	—
5.0	13.9	12.0	6.0	X	X	X	X	X	X	X	X	—	X	X	—	X	X	—	—	—	—
6.0	16.7	14.4	7.2	X	X	X	X	X	X	X	X	—	X	X	—	X	X	—	X	X	—
7.0	19.4	16.8	8.4	—	—	X	X	X	X	X	X	—	X	X	—	X	X	—	X	X	—
8.0	22.2	19.2	9.6	—	—	X	X	X	X	X	X	—	X	X	—	X	X	—	X	X	—
9.9	27.5	23.8	11.9	—	—	—	—	X	X	X	X	—	X	X	—	X	X	—	X	X	—
12.0	33.3	28.9	14.4	—	—	—	—	—	—	X	X	X	X	X	X	X	X	X	X	X	X
14.0	38.9	33.7	16.8	—	—	—	—	—	—	—	—	—	X	X	X	X	X	X	X	X	X
15.0	41.6	36.1	18.0	—	—	—	—	—	—	—	—	—	X	X	X	X	X	X	X	X	X
16.0	—	38.5	19.2	—	—	—	—	—	—	—	—	—	X	X	X	X	X	X	X	X	X
18.0	—	—	21.7	—	—	—	—	—	—	—	—	—	—	—	—	X	X	X	X	X	X
19.9	—	—	23.9	—	—	—	—	—	—	—	—	—	—	—	—	X	X	X	X	X	X
25.0	—	—	30.1	—	—	—	—	—	—	—	—	—	—	—	—	—	—	—	X	X	X
30.0	—	—	36.1	—	—	—	—	—	—	—	—	—	—	—	—	—	—	—	X	X	X

NOTE(S):

a. Electric Heating Capacities BTUh) = Heater kW x 3413.
b. Electric Heater Amp. for 3-phase Power = (Heater kW x 1000)/(Applied Voltage x 1.73).

LEGEND

X — Available Option
— — Not Available

Coils

Coils should be cleaned by brushing the entering air face between fins with a stiff brush. Brushing should be followed by cleaning with a vacuum cleaner. If a compressed air source is available, the coil may also be cleaned by blowing air through the coil fins from the leaving air face. This should again be followed by vacuuming. Units equipped with regularly replaced air filters will require less frequent coil cleaning.

Electric Resistance Heater Assembly

Electric resistance heaters typically require no scheduled maintenance when unit air filters are changed properly. The operation and service life may be affected by other conditions and equipment in the system. The two most important operating conditions for an electric heater are proper airflow and proper supply voltage. High supply voltage and/or poorly distributed or insufficient airflow over the element will result in element overheating and possible limit switch openings.

This condition may result in the heater cycling on the high limit thermal cutout. Open-strip heaters have an automatic reset switch and high-limit thermal switch as a backup. Automatic reset limit switches reset after the heater has cooled down. High-limit thermal switches must be replaced once the circuit has been broken.

The high-limit thermal cutout device is a safety device only, not intended for continuous operation. This device only operates when a problem exists; ANY condition that causes high-limit cutout MUST be corrected immediately. High supply voltage also causes excessive amperage draw, and may trip the circuit breaker or blow the fuse(s) on incoming power supply.

After proper airflow and supply power are assured, regular filter maintenance is important to provide clean air over the heater. Dirt allowed to deposit on the heating element will cause hot spots and eventual element burn through. These hot spots will normally not be enough to trip the high-limit thermal cut-out device, and may not be evident until actual heater element failure.

Cabinet/Control Box Maintenance Light

An optional light-emitting diode (LED) service light provides a source of illumination in the main unit cabinet and the control box during routine maintenance and troubleshooting in dark ceiling spaces.

When power is turned “OFF” for maintenance or troubleshooting, the control box/cabinet light will turn “ON” as soon as control box/cabinet door is open (see Fig. 24).

Electrical Wiring and Controls

Refer to wiring diagram attached to unit for type and number of controls provided on each unit. Refer to Fig. A-U in Appendix A starting on page 26 for typical wiring diagrams examples.

Verify integrity of all electrical connections at least twice during the first year of operation. Subsequently, all controls must be inspected periodically for proper operation. Some components may experience erratic operation or failure due to age. Wall thermostats may also become clogged with dust and lint, and must be periodically inspected and cleaned to provide reliable operation.

When replacing any components such as fuses or relays, use only the exact type, size and voltage component as furnished from the factory. Any deviation without factory-authorization could result in personnel injury or damage to the unit. This will also void all factory warranties. NOTE: Only factory supplied replacement parts ensure that the warranty and agency status remain in effect. All repair work shall be done in such a manner as to maintain the equipment in compliance with governing codes, ordinances and testing agency listings.

Drain

Inspect drain before initial start-up, and prior to each cooling season to assure that drain trap and line are clear. When clogged, clear the debris so condensate easily flows.

Periodically inspect drain during cooling season to maintain a free-flowing condensate. Units are provided with a secondary or “tell-tale” drain connection that will indicate a clogged main-drain line by flow from “tell-tale” connection.

Should algae and/or bacteria growth become a concern, consult an air conditioning and refrigeration supply organization familiar with local conditions for chemicals, or other solutions available to control these agents.

Filters — Throwaway

Throwaway type filters; commonly used on fan coil units must be replaced on a regular basis. The time between replacement should be established based on regular inspection of filter, and also recorded in the log for each unit. Refer to Table 8 for appropriate filter dimensions compatible with each unit size. If replacement filters are not purchased from factory, filters used should be the same type and size as factory, or recommended by factory. Extended surface filters must not be used due to high air pressure drops encountered with these types of filters being incompatible with the type of fan coil unit covered in this manual. Consult factory for applications using filter types other than factory standard or optional product.

Table 8 — Filter Sizes

UNIT SIZE 42DH/DV	FILTER QTY	NOMINAL FILTER SIZES in. (mm)
06	1	16-1/2 x 24 (419 x 610)
08	1	16-1/2 x 24 (419 x 610)
10	1	18-1/4 x 33 (464 x 838)
12	1	18-1/4 x 33 (464 x 838)
16	2	18-1/2 x 21-1/2 (464 x 546)
20/22	2	20-1/2 x 22 (521 x 559)
30	2	29 x 22 (737 x 559)

Filters — Replacement and Installation

Each unit is equipped with return air filters. Filters must be periodically replaced.

The units’ filters are 1 in., 2 in., or 4 in. thick. Filters can be easily accessed from the side or bottom (42DH - horizontal unit) or side and top (42DV - vertical unit) of the filter rack (see Fig. 25 or 26).

To remove filters from the side of the filter rack:

1. Remove the side access panel (A) of the filter rack by pulling tab at the bottom (42DH)/top (42DV) of the panel to free from magnets, and lower (42DH)/lift (42DV) it out of the slot (B) in the top (42DH)/bottom (42DV) of the filter frame.
2. Pull out dirty filters.
3. Replace with new appropriate size filters.
4. To re-install side access panel into filter rack:
   a. Insert the tab of panel into the slot in filter frame's top (42DH)/bottom (42DV) (B).
   b. Rotate panel toward the frame, ensure magnets are engaged.

To remove filters from the bottom of the filter rack (42DH):

1. Open hinged bottom access panel (C) - pull down to disengage magnets.
2. Pull out dirty filters.
3. Replace with new appropriate size filters.
4. Secure bottom access panels, make sure magnets are re-engaged.

To remove filters from the top of the filter rack (42DV):

1. Open hinged top access panel (C) - pull up to disengage magnets.
2. Pull out dirty filters.
3. Replace with new appropriate size filters.
4. Secure top access panels, make sure magnets are re-engaged.

The 42DH/DV units are designed to accept various filter sizes depending on job requirements. Each filter frame is equipped with filter support angle brackets (D) and 1 in. or 2 in. filter slots on all four sides of filter frame. The filter support angle brackets (D) are designed to provide guidance and support to the new filter as it is being inserted.

In order to accommodate 1 in. and 2 in. filters, the bracket should be inserted into corresponding slots on all sides of the filter frame (see Fig. 25 or 26) and secured with screws. When 4 in. filter is installed, the brackets should be stored for future use with different filter thickness, or discarded if 4 in. filter will be always used.

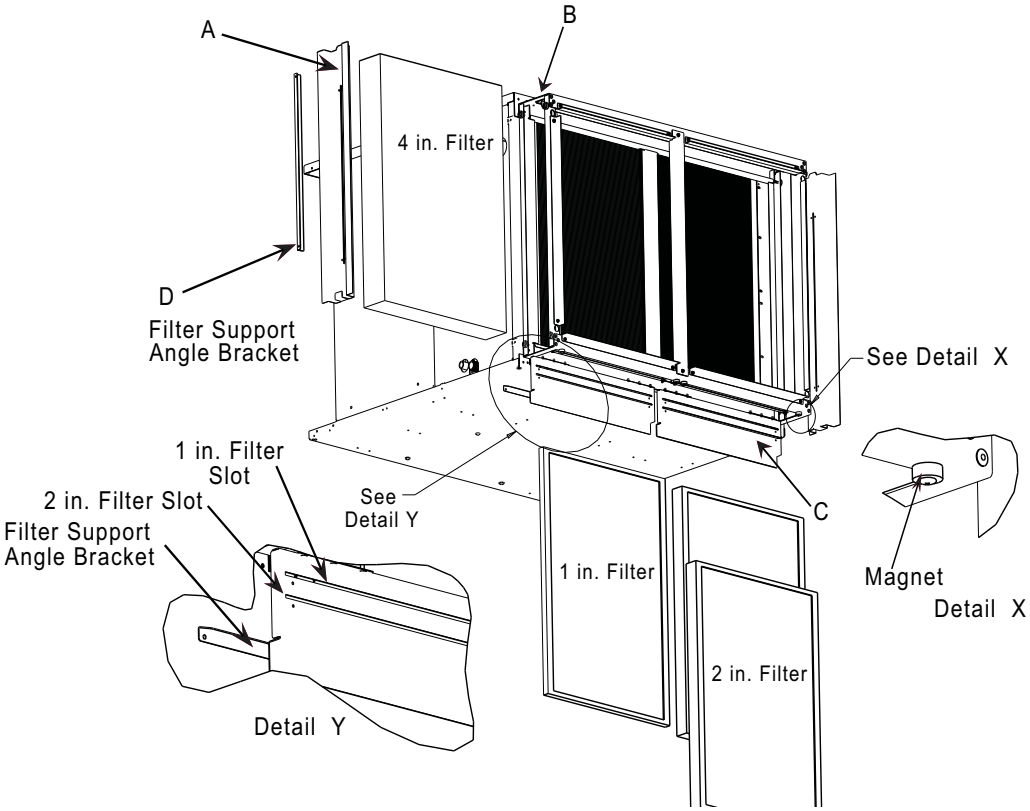

Fig. 25 — 42DH Filter Rack

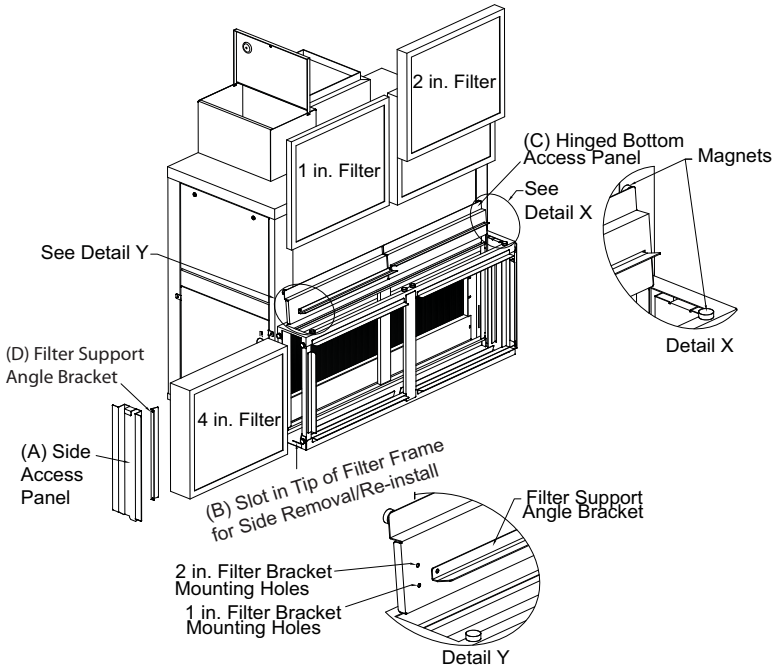

Fig. 26 — 42DV Filter Rack

Replacement Parts

Use factory replacement parts wherever possible to maintain optimal unit performance, factory conditioned operating characteristics, and testing agency listings.

Replacement parts are available for purchase via local Carrie Sales Representative.

Contact local Sales Representative and/or factory prior to ALL unit modifications. ALL modifications not preauthorized by factory could result in personnel injury, unit damage, and void ALL factory warranties.

When ordering, provide the following to ensure proper part identification:

1. Complete unit model number
2. Unit serial number
3. Unit hand connection (right or left hand) when facing air stream, hand is determined by looking at the front of the unit and locating where the control valve is mounted (on the right or left side).
4. Complete part description including all numbers. For Warranty Replacements, provide all of the above, and unit shipping code (located on the upper right-hand corner of serial plate). Contact factory for authorization to return any parts including defective parts replaced by warranty. All shipments returned to factory must be endorsed with factory provided return authorization number.

Factory Recommended Spare Parts List

- transformer
- fuse
- fuse holder
- ECM board (must be programmed by factory prior to shipment)
- wire harness overflow switch
- lower rubber isolator
- motor/motor mount (motor must be programmed by factory prior to shipment)
- blower housing
- filter
- heater element
- auto reset heater limit switch
- manual reset limit switch

APPENDIX A — TYPICAL WIRING DIAGRAM EXAMPLES

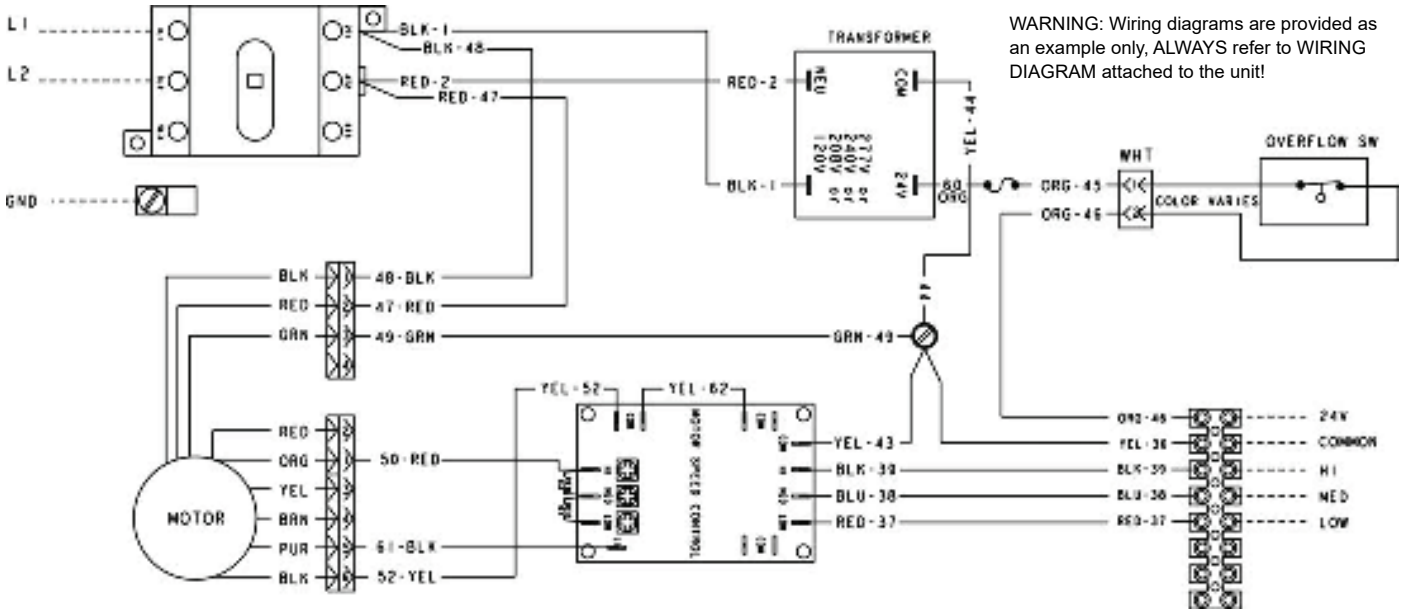

Fig. A — No Electric Heat, Single Phase Power with Control Board

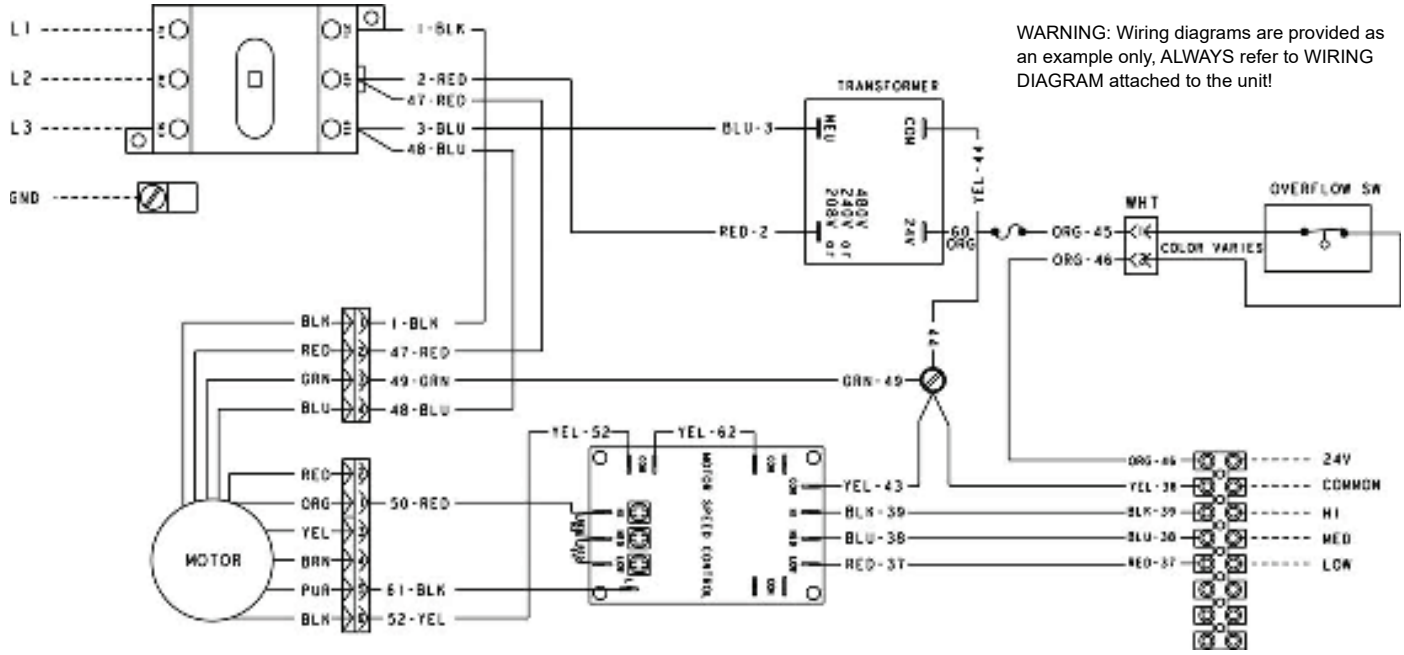

Fig. B — No Electric Heat, Three Phase Power with Control Board

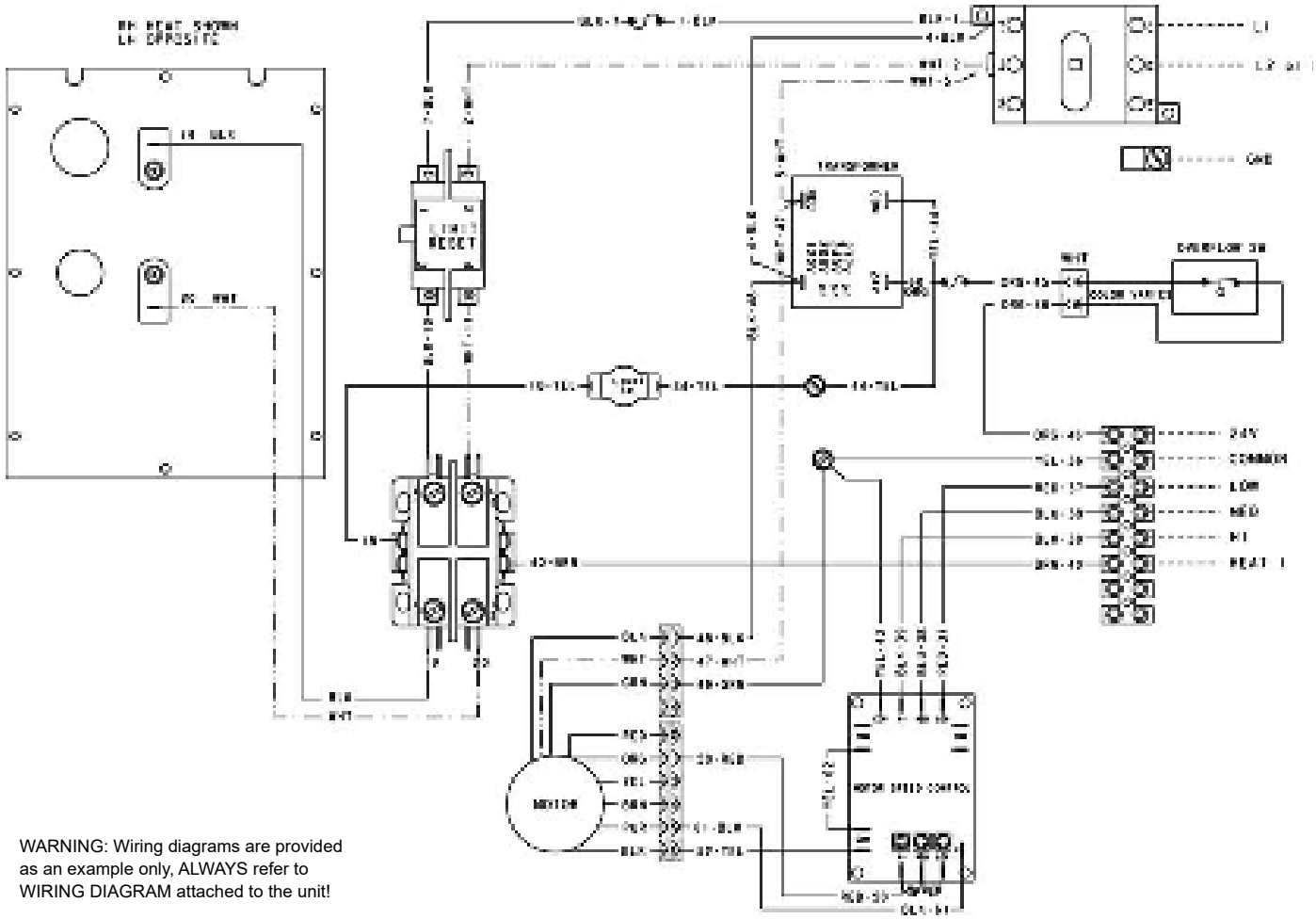

WARNING: Wiring diagrams are provided as an example only, ALWAYS refer to WIRING DIAGRAM attached to the unit!

Fig. C — Single Element Heater, Single Stage Heat, Single Phase Power with Control Board

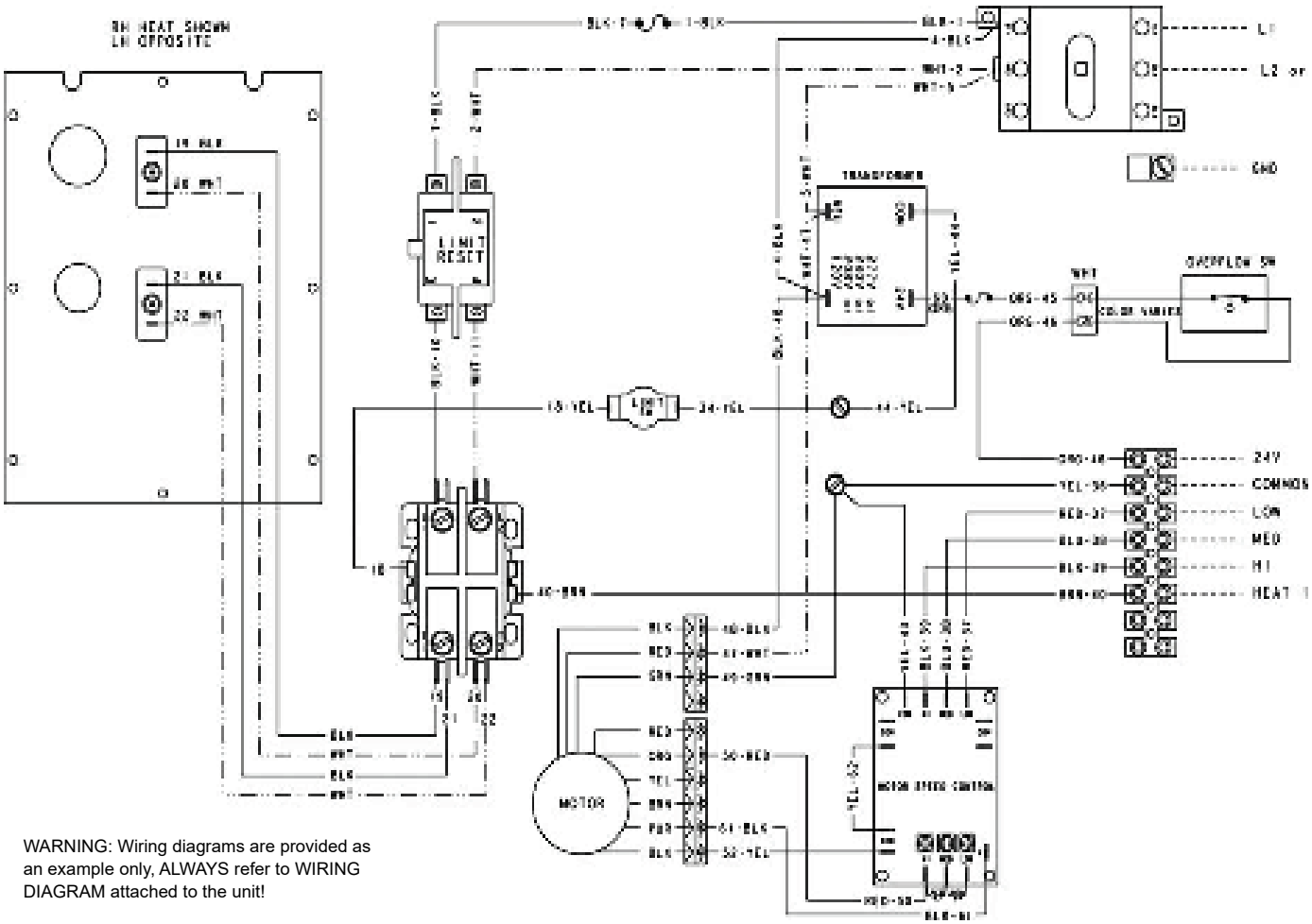

WARNING: Wiring diagrams are provided as an example only, ALWAYS refer to WIRING DIAGRAM attached to the unit!

Fig. D — Two Element Heater, Single Stage Heat, Single Phase Power with Control Board

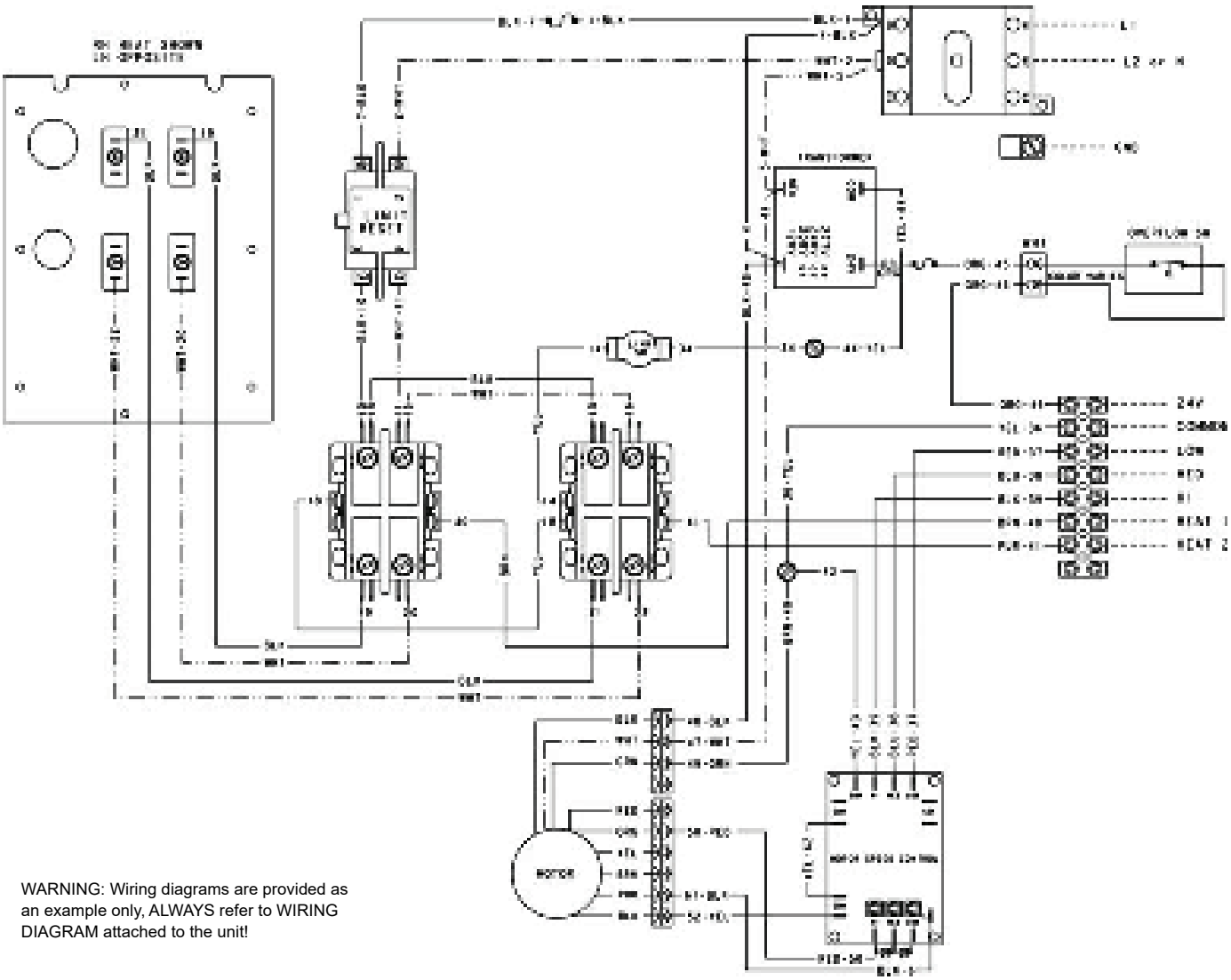

WARNING: Wiring diagrams are provided as an example only, ALWAYS refer to WIRING DIAGRAM attached to the unit!

Fig. E — Two Element Heater, Two-Stage Heat, Single Phase Power with Control Board

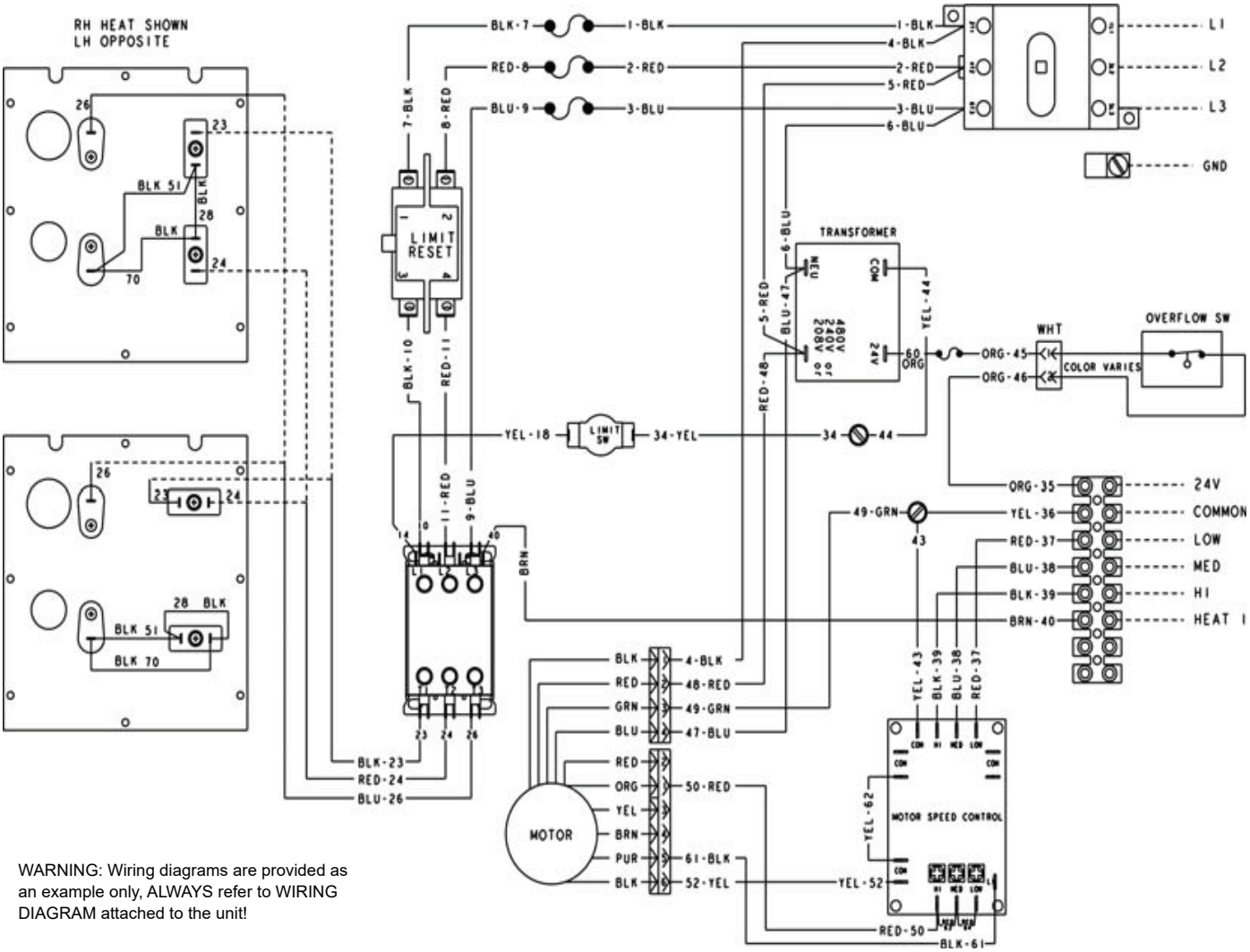

Fig. F — Three Element Heater, Single Stage Heat, Three Phase Power with Control Board

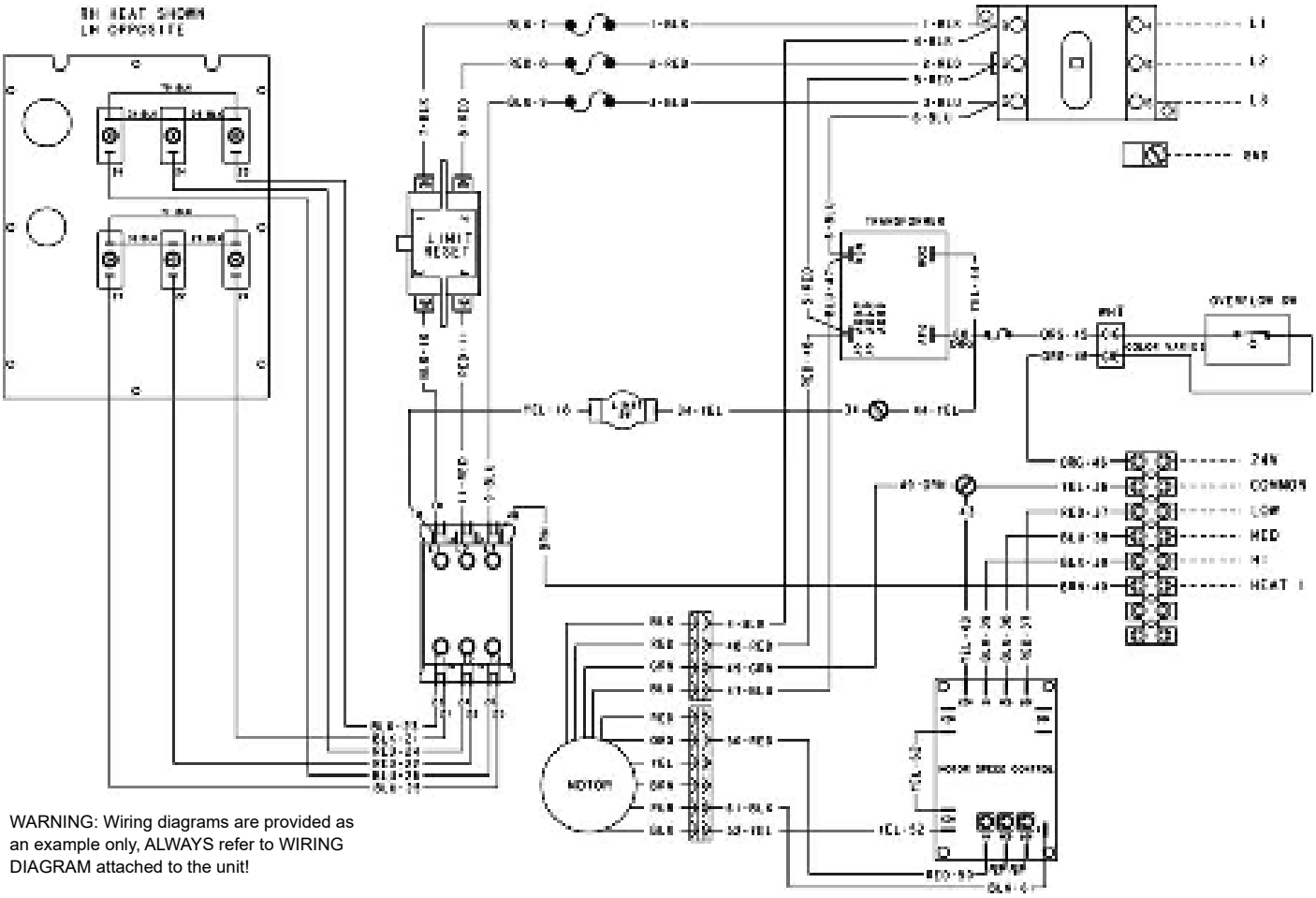

WARNING: Wiring diagrams are provided as an example only, ALWAYS refer to WIRING DIAGRAM attached to the unit!

Fig. G — Six Element Heater, Single Stage Heat, Three Phase Power with Control Board

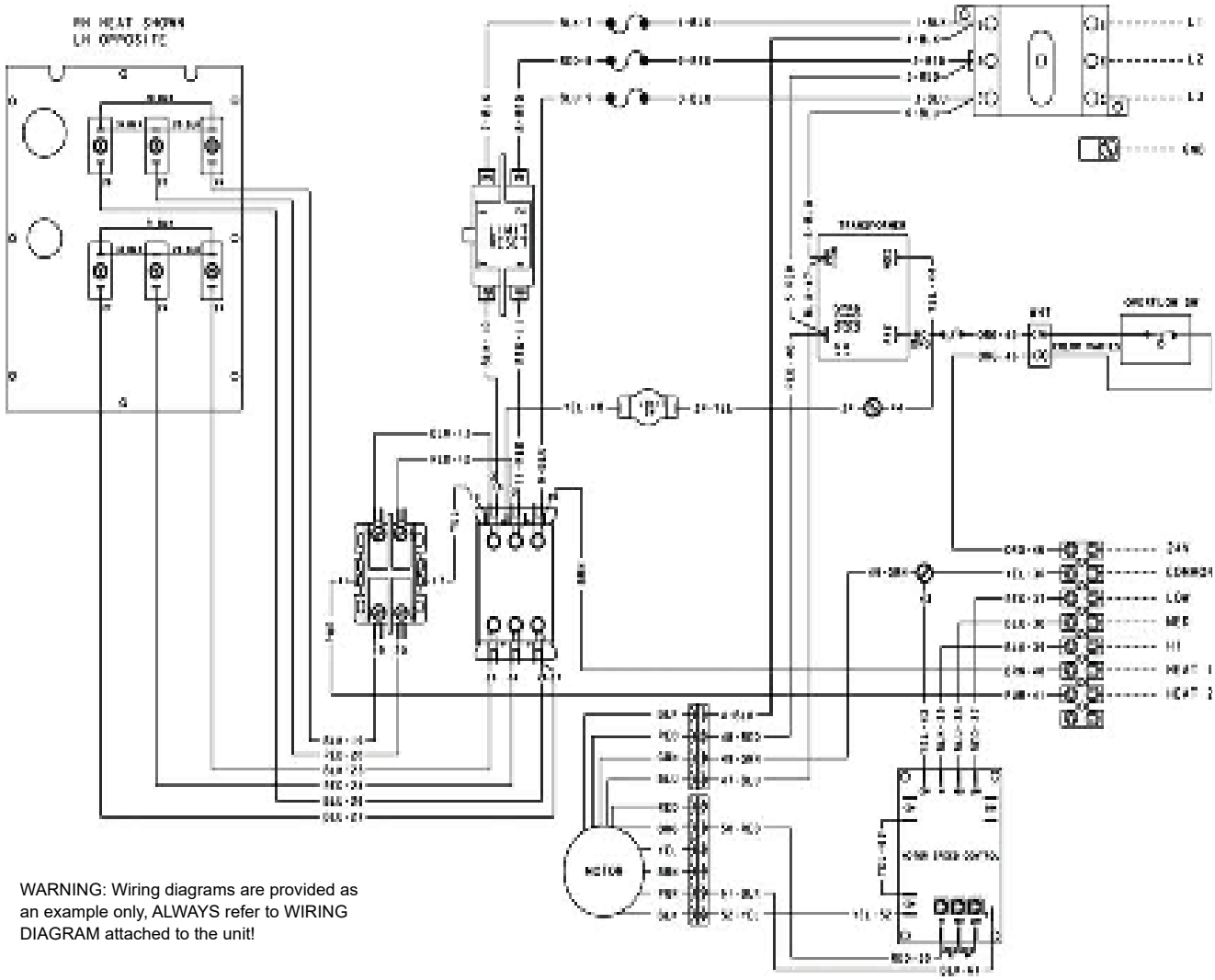

WARNING: Wiring diagrams are provided as an example only, ALWAYS refer to WIRING DIAGRAM attached to the unit!

Fig. H — Six Element Heater, Two Stage Heat, Three Phase Power with Control Board

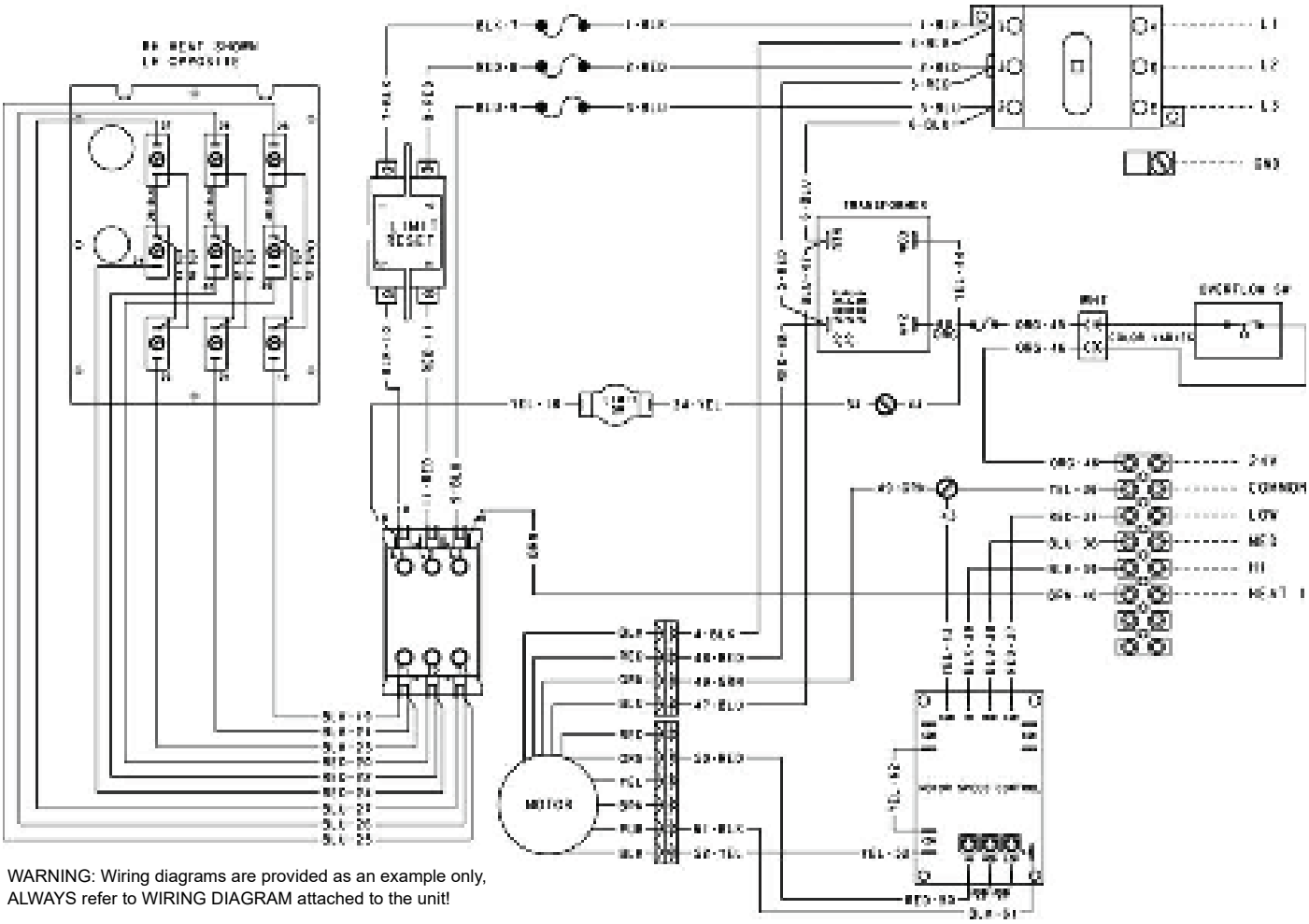

WARNING: Wiring diagrams are provided as an example only, ALWAYS refer to WIRING DIAGRAM attached to the unit!

Fig. I — Nine Element Heater, Single Stage Heat, Three Phase Power with Control Board

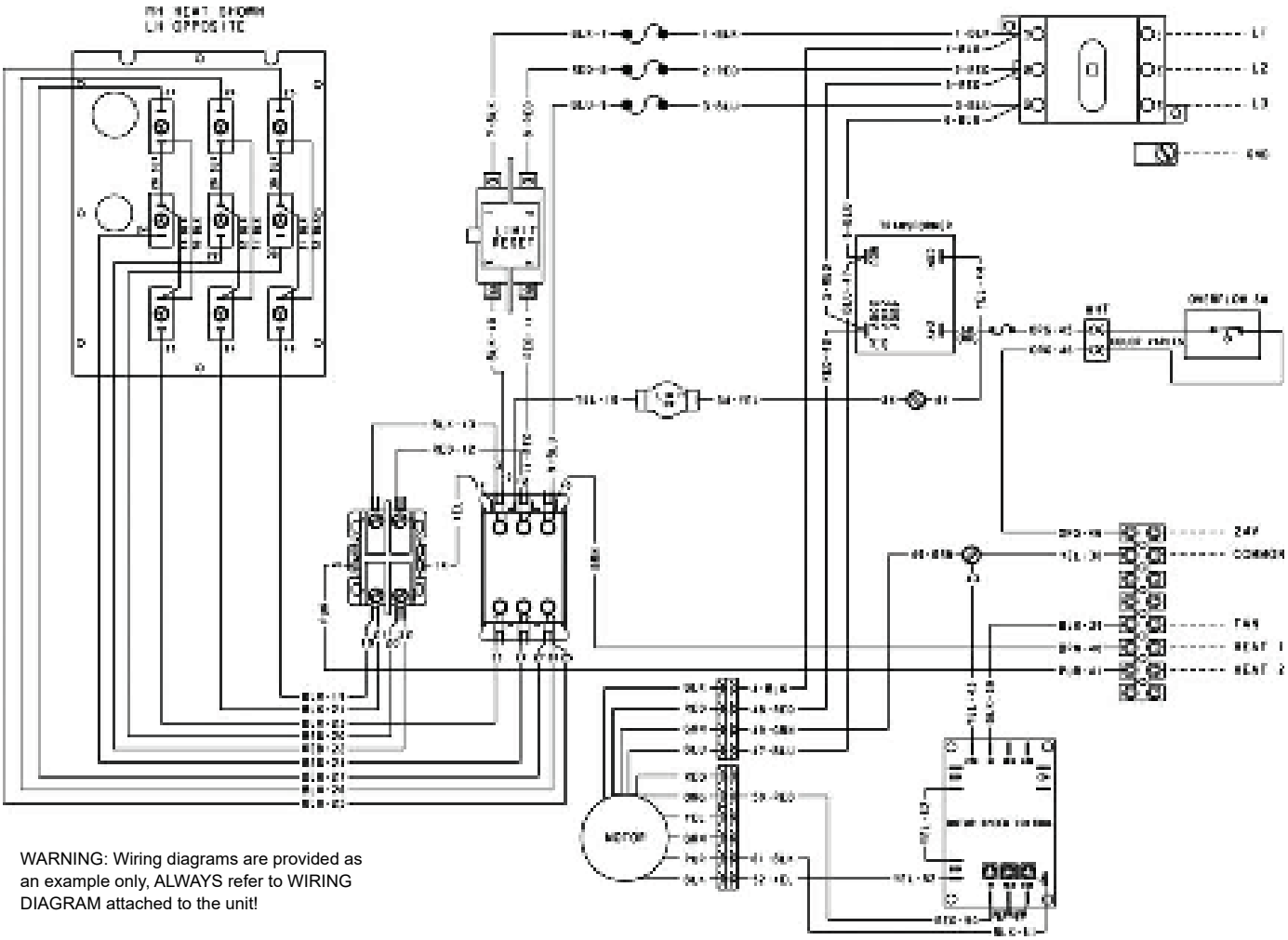

WARNING: Wiring diagrams are provided as an example only, ALWAYS refer to WIRING DIAGRAM attached to the unit!

Fig. J — Nine Element Heater, Two Stage Heat, Three Phase Power with Control Board

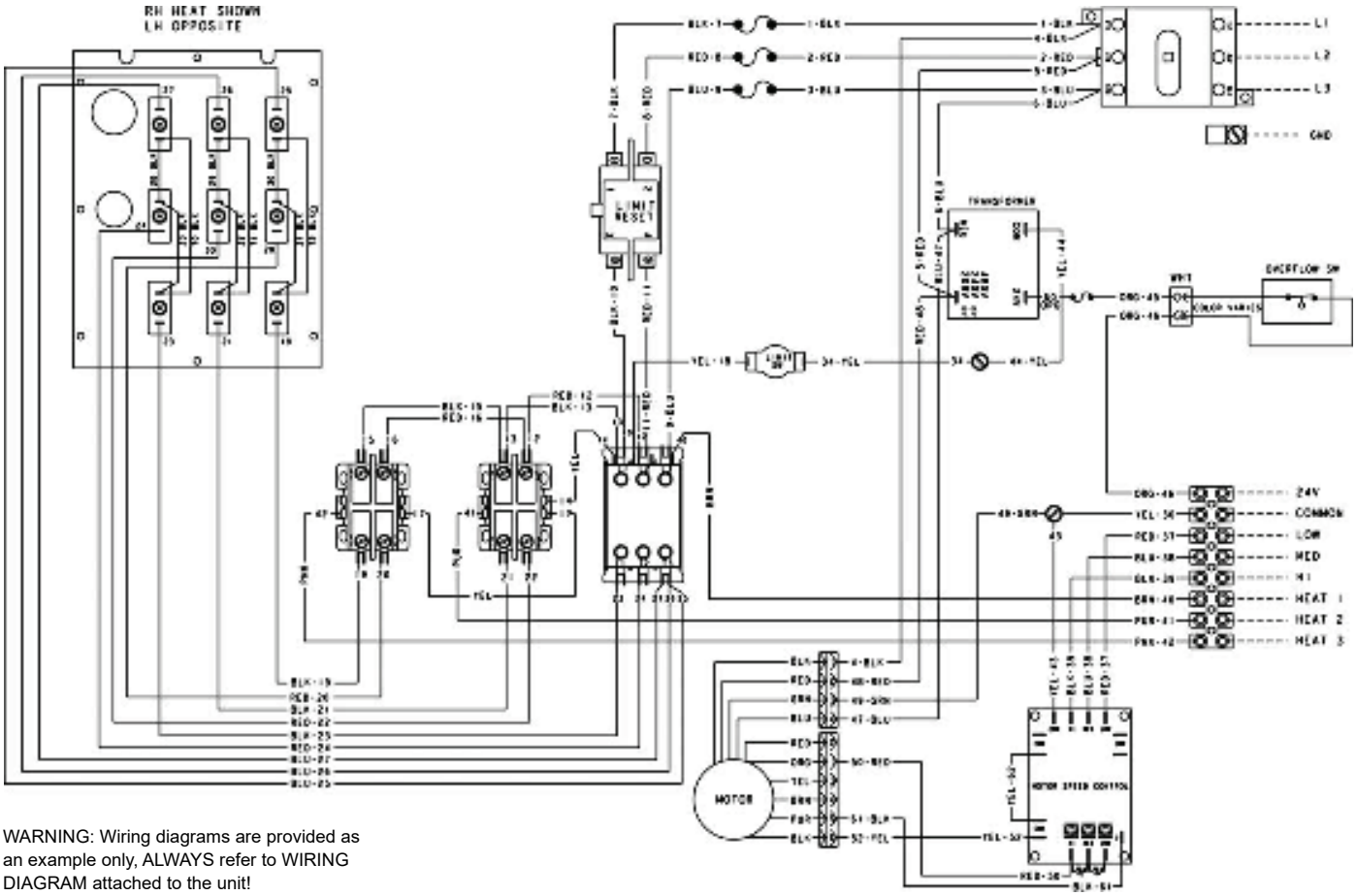

WARNING: Wiring diagrams are provided as an example only, ALWAYS refer to WIRING DIAGRAM attached to the unit!

Fig. K — Nine Element Heater, Three Stage Heat, Three Phase Power with Control Board

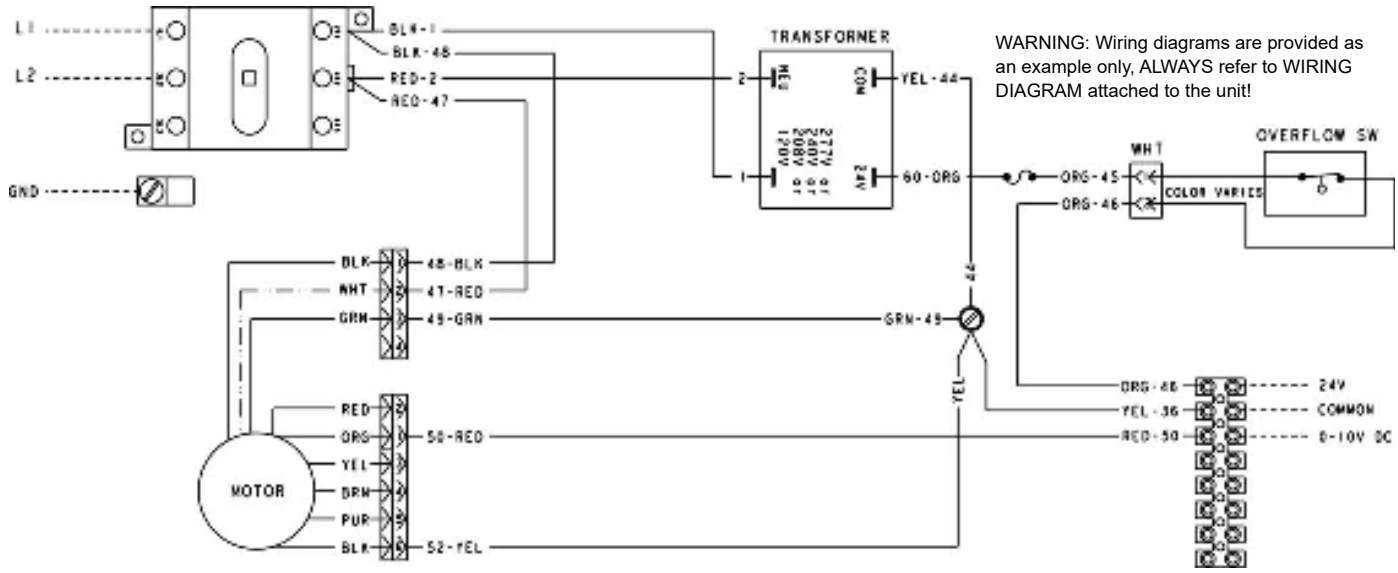

Fig. L — No Electric Heat, Single Phase Power without Control Board

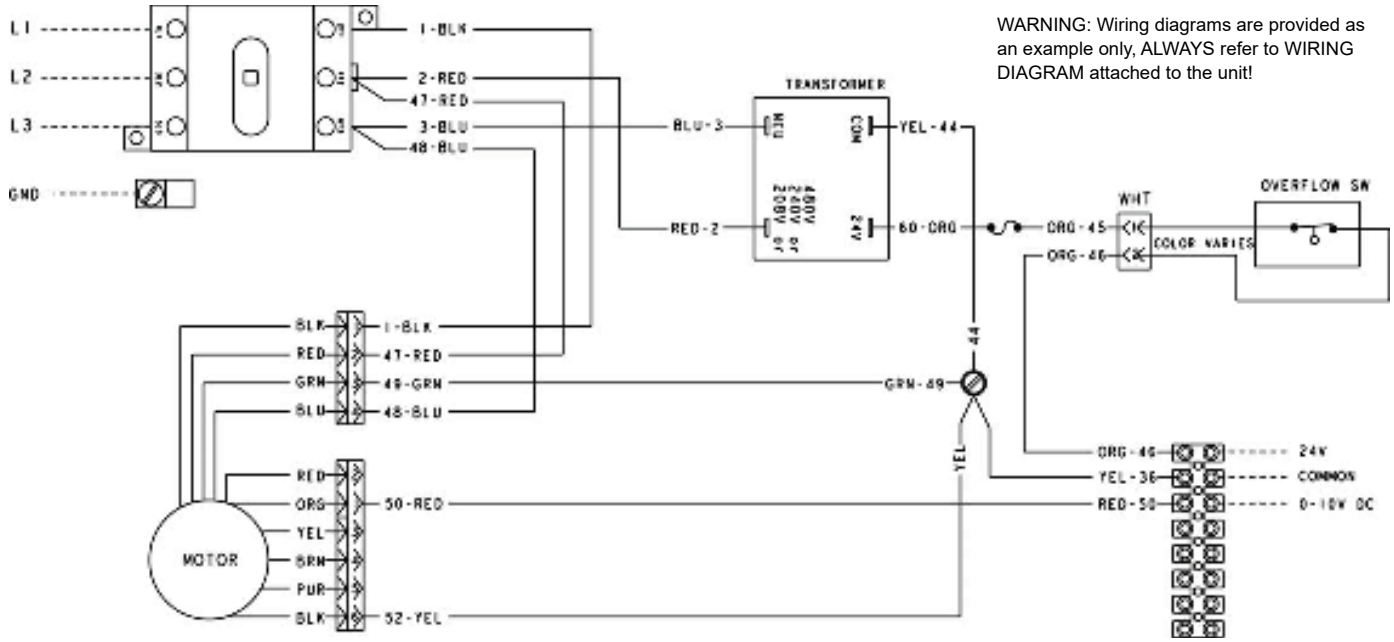

Fig. M — No Electric Heat, Three Phase Power without Control Board

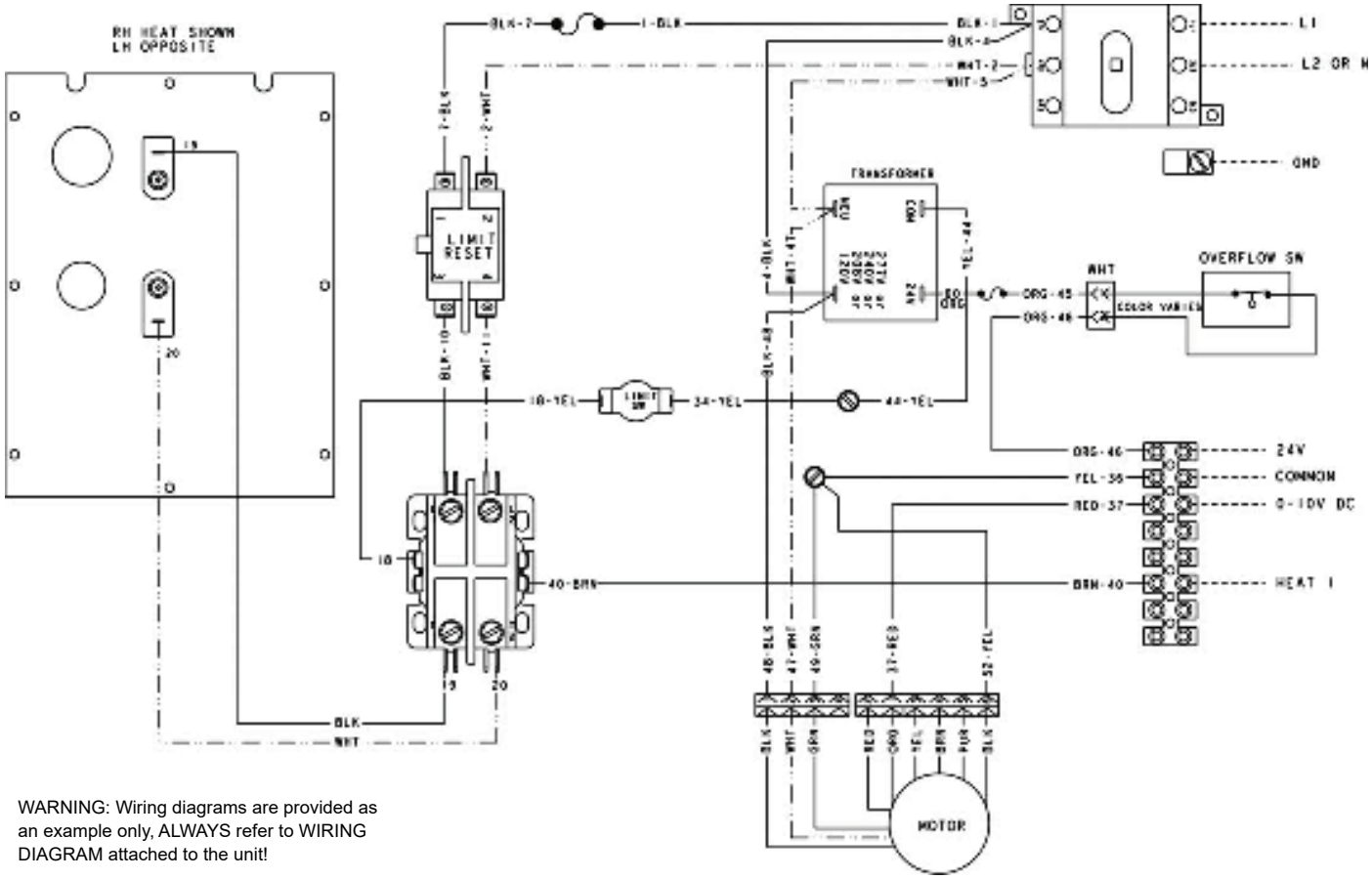

WARNING: Wiring diagrams are provided as an example only, ALWAYS refer to WIRING DIAGRAM attached to the unit!

Fig. N — Single Element Heater, Single Stage Heat, Single Phase Power without Control Board

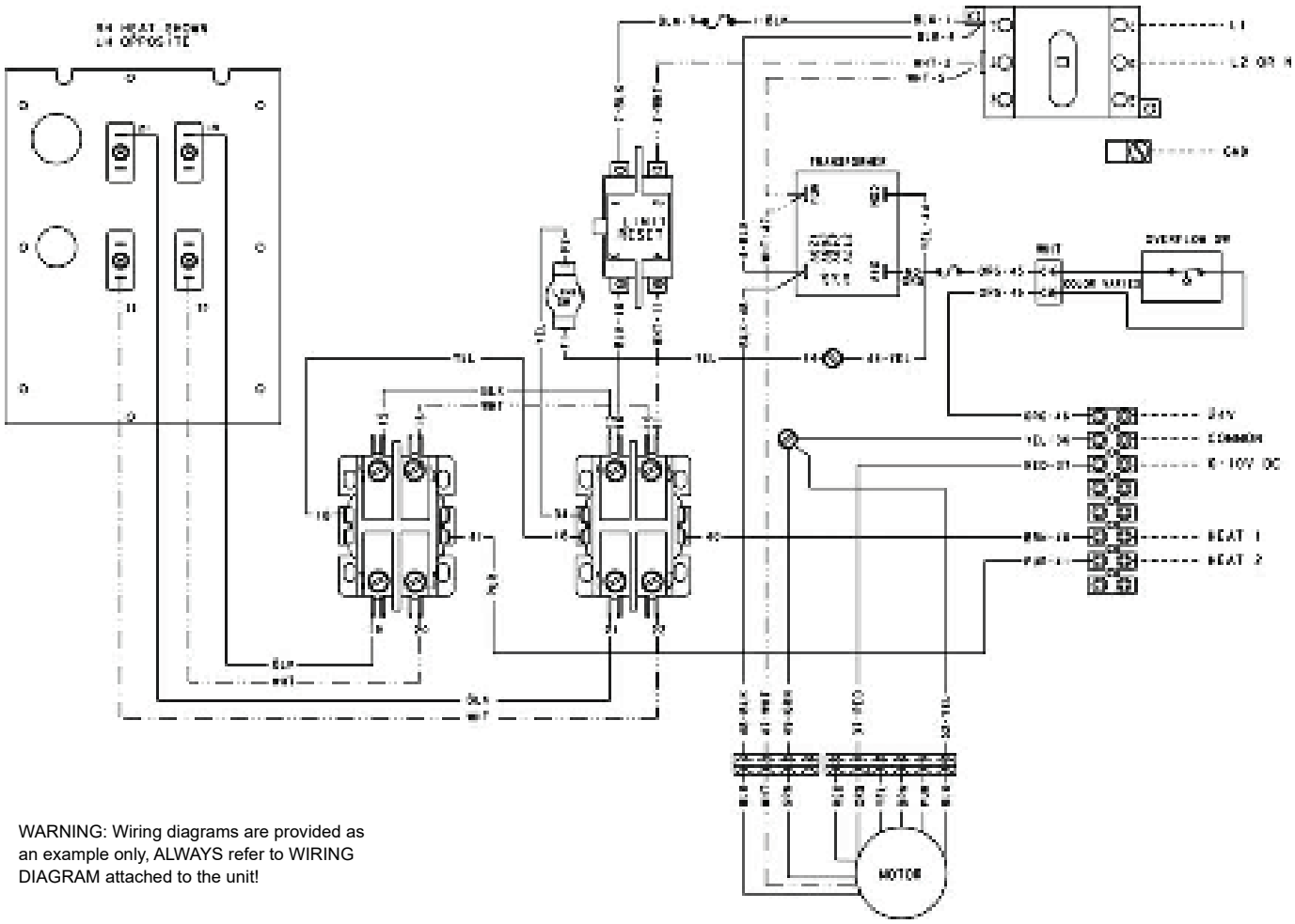

WARNING: Wiring diagrams are provided as an example only, ALWAYS refer to WIRING DIAGRAM attached to the unit!

Fig. O — Two Element Heater, Two Stage Heat, Single Phase Power without Control Board

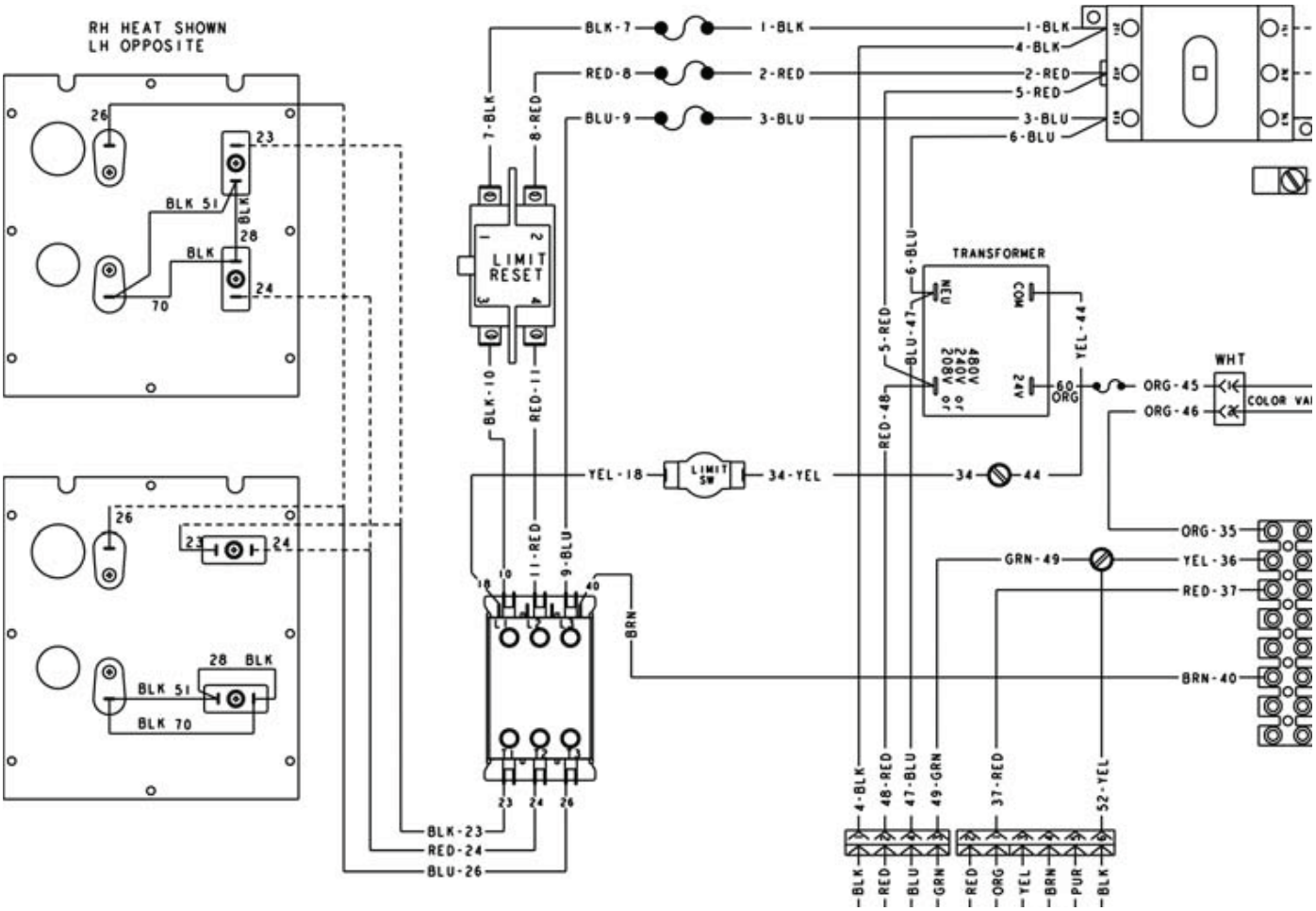

WARNING: Wiring diagrams are provided as an example only, ALWAYS refer to WIRING DIAGRAM attached to the unit!

Fig. P — Three Element Heater, Single Stage Heat, Three Phase Power without Control Board

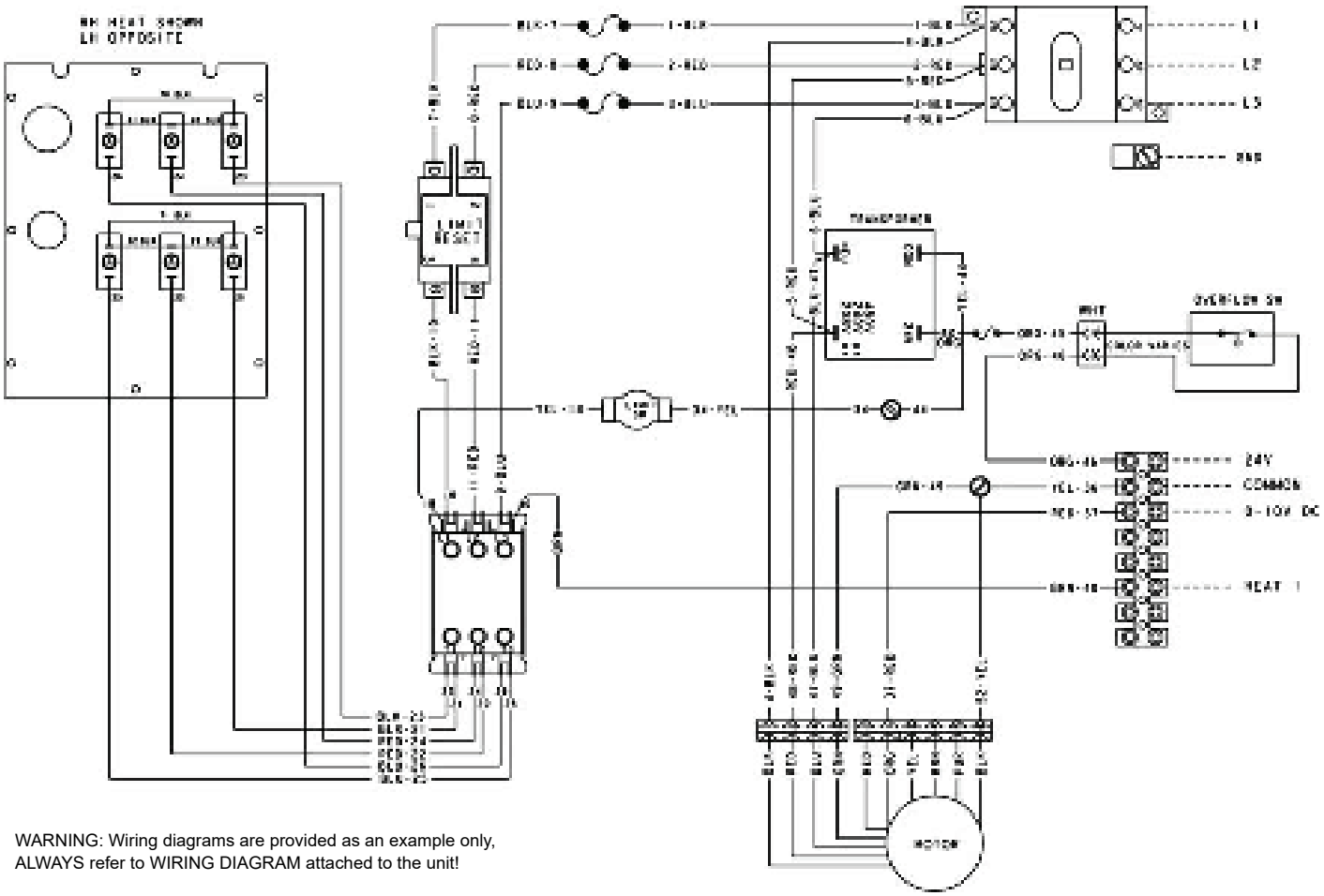

WARNING: Wiring diagrams are provided as an example only, ALWAYS refer to WIRING DIAGRAM attached to the unit!

Fig. Q — Six Element Heater, Single Stage Heat, Three Phase Power without Control Board

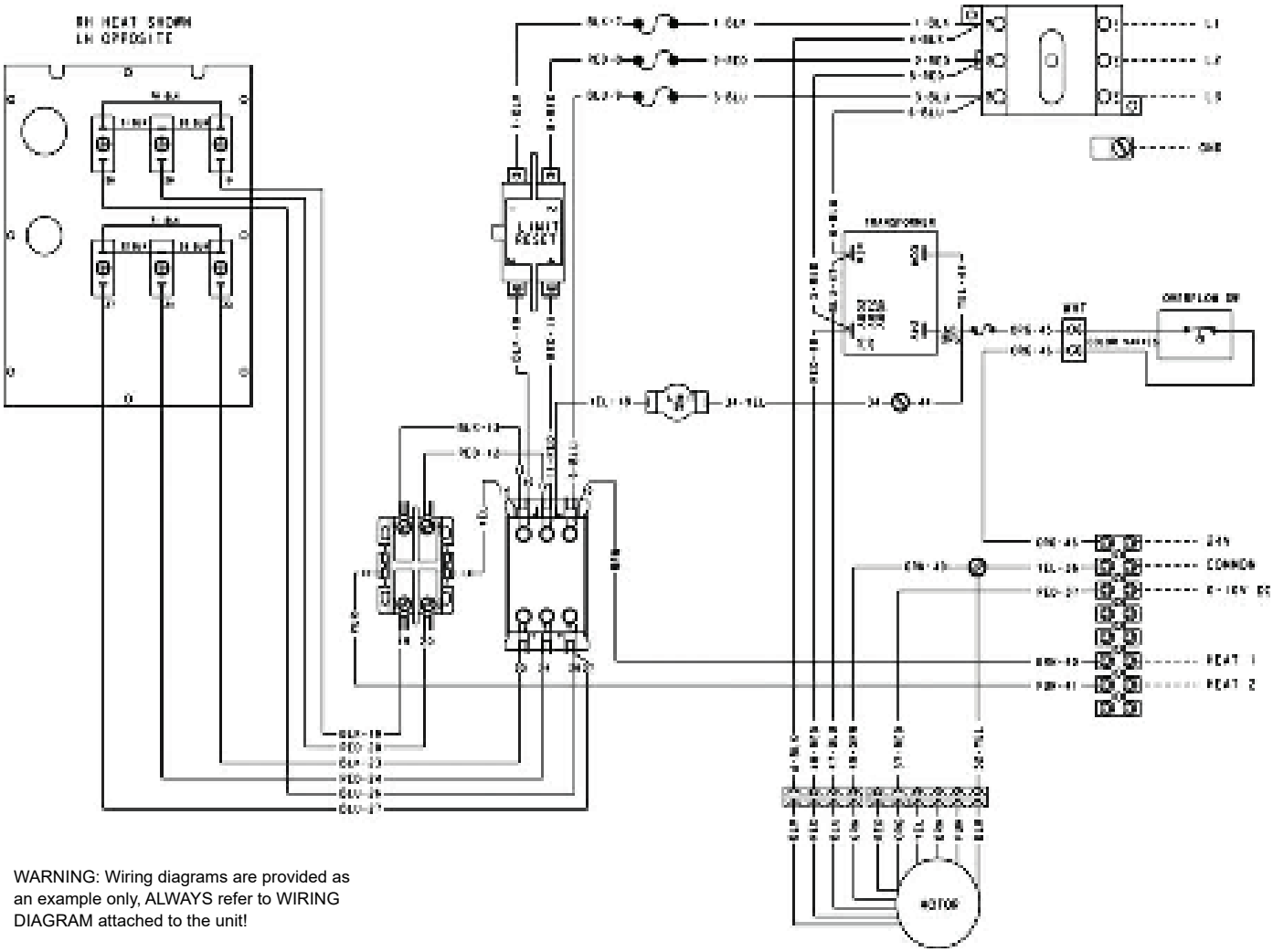

WARNING: Wiring diagrams are provided as an example only, ALWAYS refer to WIRING DIAGRAM attached to the unit!

Fig. R — Six Element Heater, Two Stage Heat, Three Phase Power without Control Board

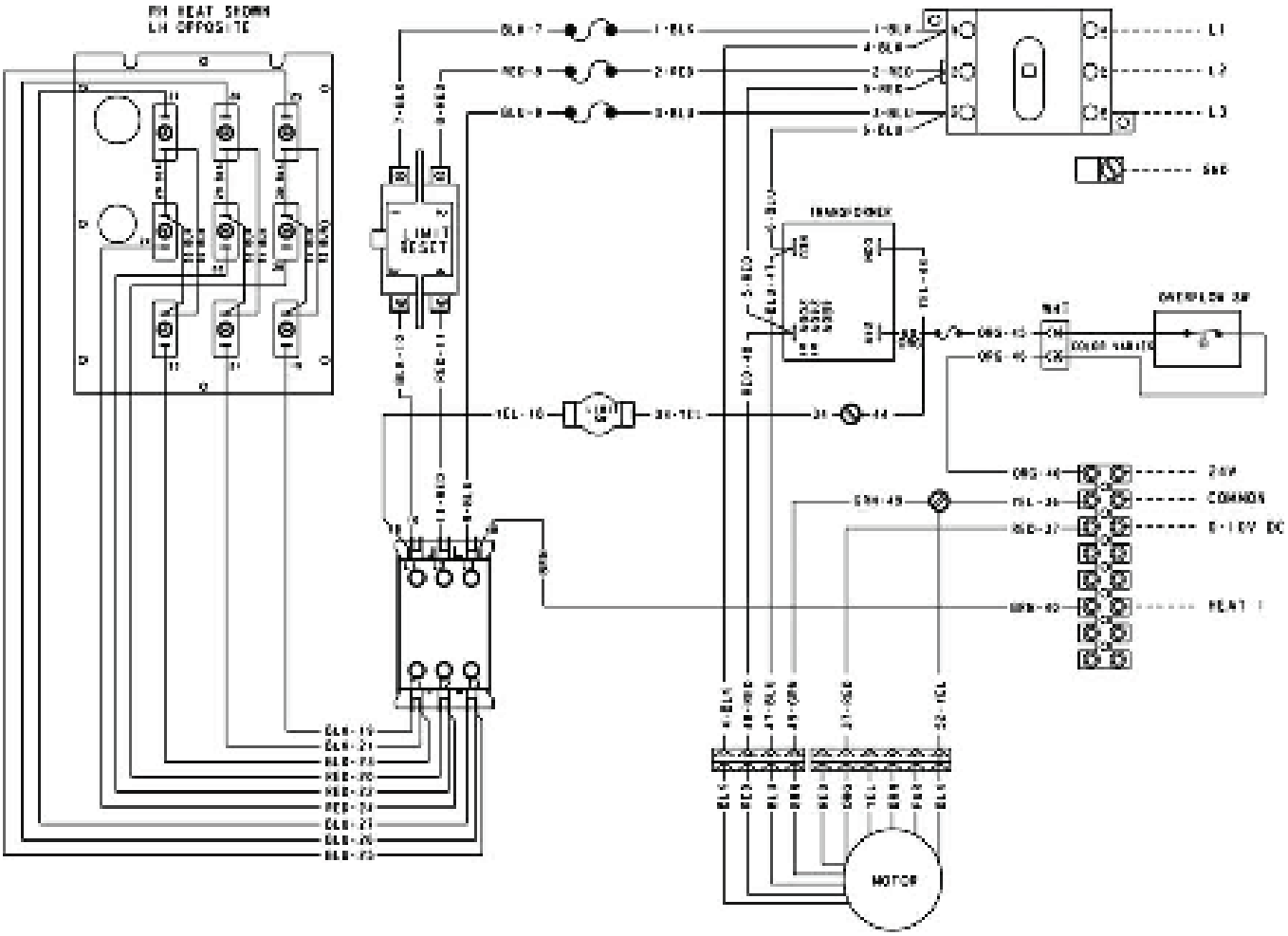

WARNING: Wiring diagrams are provided as an example only, ALWAYS refer to WIRING DIAGRAM attached to the unit!

Fig. S — Nine Element Heater, Single Stage Heat, Three Phase Power without Control Board

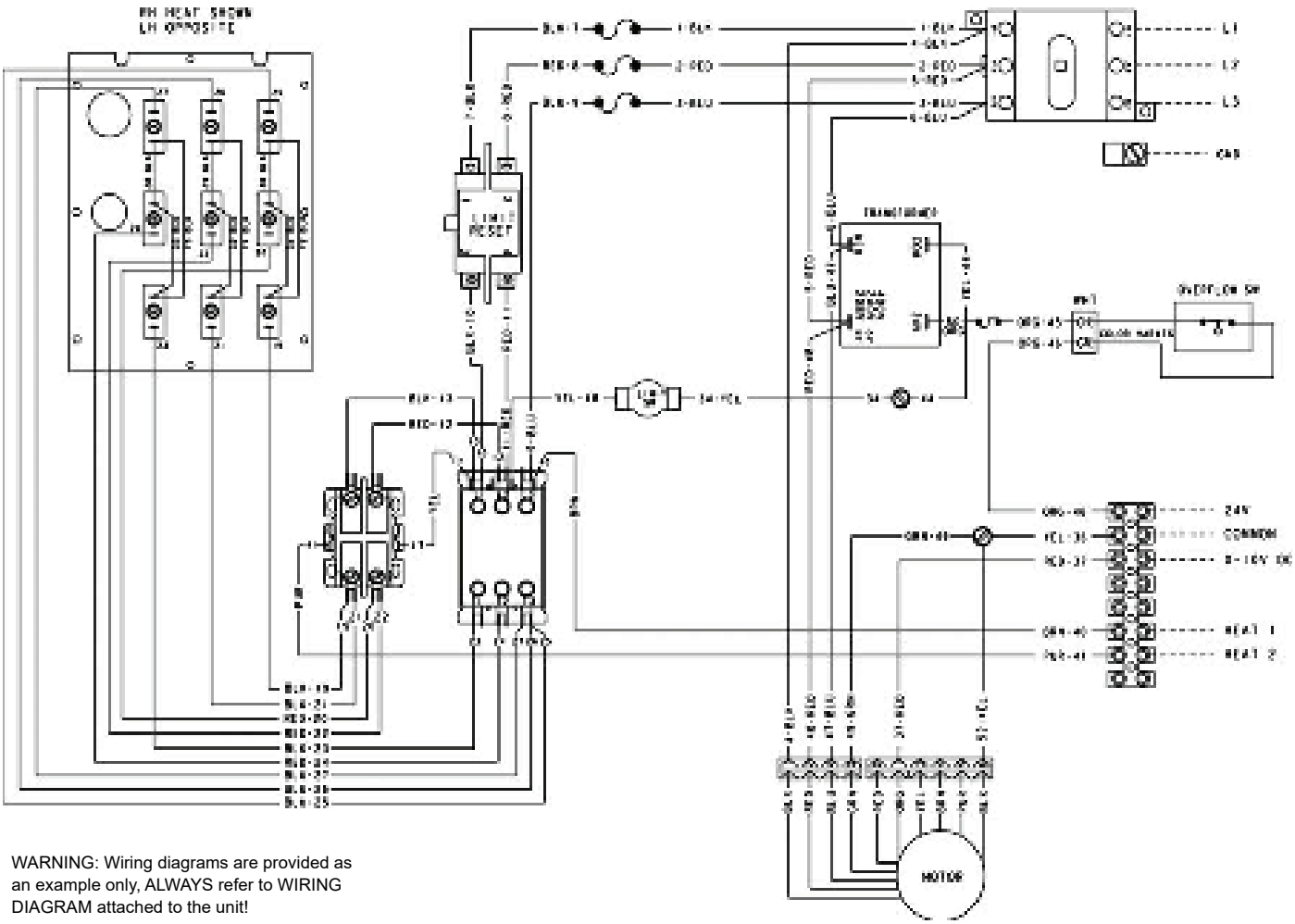

WARNING: Wiring diagrams are provided as an example only, ALWAYS refer to WIRING DIAGRAM attached to the unit!

Fig. T — Nine Element Heater, Two Stage Heat, Three Phase Power without Control Board

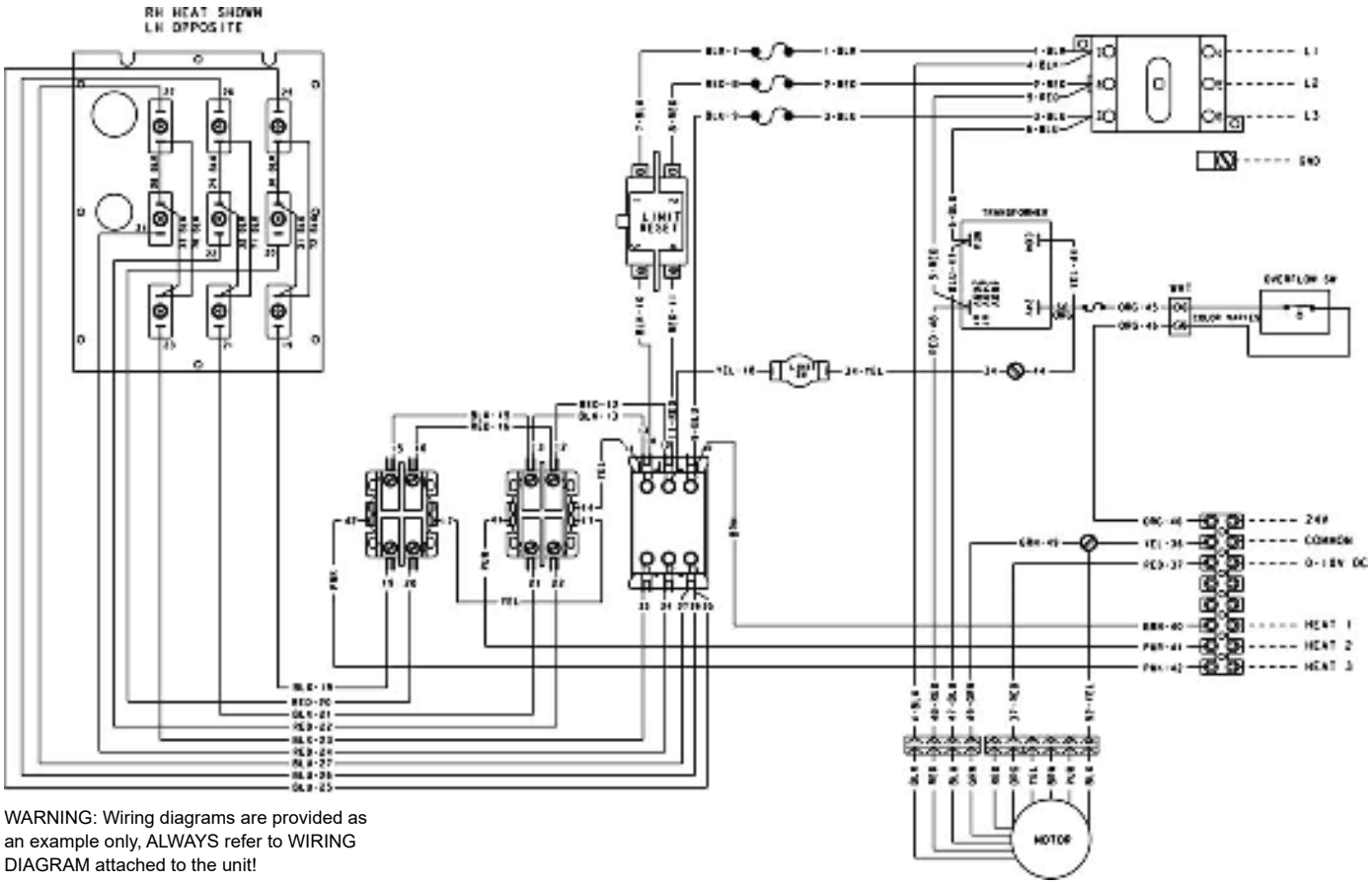

WARNING: Wiring diagrams are provided as an example only, ALWAYS refer to WIRING DIAGRAM attached to the unit!

Fig. U — Nine Element Heater, Three Stage Heat, Three Phase Power without Control Board

© 2025 Carrier

START-UP CHECKLIST

NOTE: To avoid injury to personnel and damage to equipment or property when completing the procedures listed in this start-up checklist, use good judgment, follow safe practices, and adhere to the safety considerations/information as outlined in preceding sections of this Installation, Start-Up, and Service document.

The reliable operation and long service life of this equipment can be improved with proper installation, operation and regular maintenance. The equipment is initially protected under Carrier's standard warranty. This warranty is provided under the condition that the following steps be followed in detail. Should any questions arise, please contact your local sales representative or the factory before attempting any installation or operation of the equipment.

I. Preliminary Information

Model No. _____ Serial No. _____

Additional Accessories _____

Receiving and Inspection

Was the unit received undamaged? (Y/N) _____

Is there any shipping damage? (Y/N) _____

If so, where: _____

_____

Will this damage prevent unit start-up? (Y/N) _____

Was the unit received complete as ordered? (Y/N) _____

Are "furnish only" parts accounted for? (Y/N) _____

Is the unit arrangement/hand correct? (Y/N) _____

Is the unit structural support complete and correct? (Y/N) _____

Handling and Installation

Is the unit secured and mounted properly? (Y/N) _____

Are mounting grommets/isolators used? (Y/N) _____

Is the unit mounted level and square? (Y/N) _____

Is proper access provided for the unit and accessories? (Y/N) _____

Is the proper electrical service provided? (Y/N) _____

Is the proper overcurrent protection provided? (Y/N) _____

Is the proper service switch/disconnect provided? (Y/N) _____

Is the chilled water line properly sized to the unit? (Y/N) _____

Is the hot water line properly sized for the unit? (Y/N) _____

Is the refrigerant line properly sized to unit? (Y/N) _____

Are all services to unit in code compliance? (Y/N) _____

Are all shipping screws and braces removed? (Y/N) _____

Is the unit protected from dirt and foreign matter? (Y/N) _____

Cooling/Heating Connections

Is field piping connected to unit? (Y/N) _____

Has all piping been pressure tested for leaks? (Y/N) _____

Are drain line and traps installed, as required? (Y/N) _____

Is all piping and valves insulated, as required? (Y/N) _____

Manufacturer reserves the right to discontinue, or change at any time, specifications or designs without notice and without incurring obligations.

Ductwork Connections

Are ductwork, fittings and grilles installed as required?	(Y/N) _____
Are flexible duct connections at unit?	(Y/N) _____
Are the proper supply and return grille type and size used?	(Y/N) _____
Is all ductwork insulated, as required?	(Y/N) _____
Is outside air controlled for freeze protection?	(Y/N) _____

Electrical Connections

Refer to unit wiring diagram to ensure connections were made.	
Connect incoming power service or services.	_____
Install and connect "furnish only" parts.	_____
Is all field wiring in code compliance?	(Y/N) _____

II. Unit start-up

Perform general visual unit and system inspection	_____
Check all wiring for secure connections	_____
Tighten all set screws	_____
Check condensate drain connection	_____
Verify trap is deep enough	_____
Prime the trap with water	_____
Check supply and return water connections for leaks	_____
Fill systems with water/refrigerant	_____
Open air vent on top of coil to vent air out of system	_____
Flush water systems	_____
Record electrical supply voltage	_____
Check for proper fan rotation	_____
Ductwork and grilles in place	_____
All unit panels and filters in place	_____
Start fans, pumps, chillers, etc.	_____
Check for overload conditions of all units	_____
Check all ductwork and units for air leaks	_____
Balance water systems, as required	_____
Balance air systems, as required	_____
Record all final settings for future use	_____
Check piping and ductwork for noise or vibration	_____
Check all dampers for proper operation	_____
Verify proper cooling operation	_____
Verify proper heating operation	_____
Reinstall all covers and access panels	_____
Verify proper condensate drainage	_____

III. RECOMMENDED MAINTENANCE

Quarterly

Change air filters	_____

Annually–In Addition to Quarterly Maintenance

Inspect all wiring connections and tighten, if necessary	_____
Clean coil and drain pan	_____
Clean blower wheel as needed	_____

CUT ALONG DOTTED LINE

CUT ALONG DOTTED LINE

© 2025 Carrier