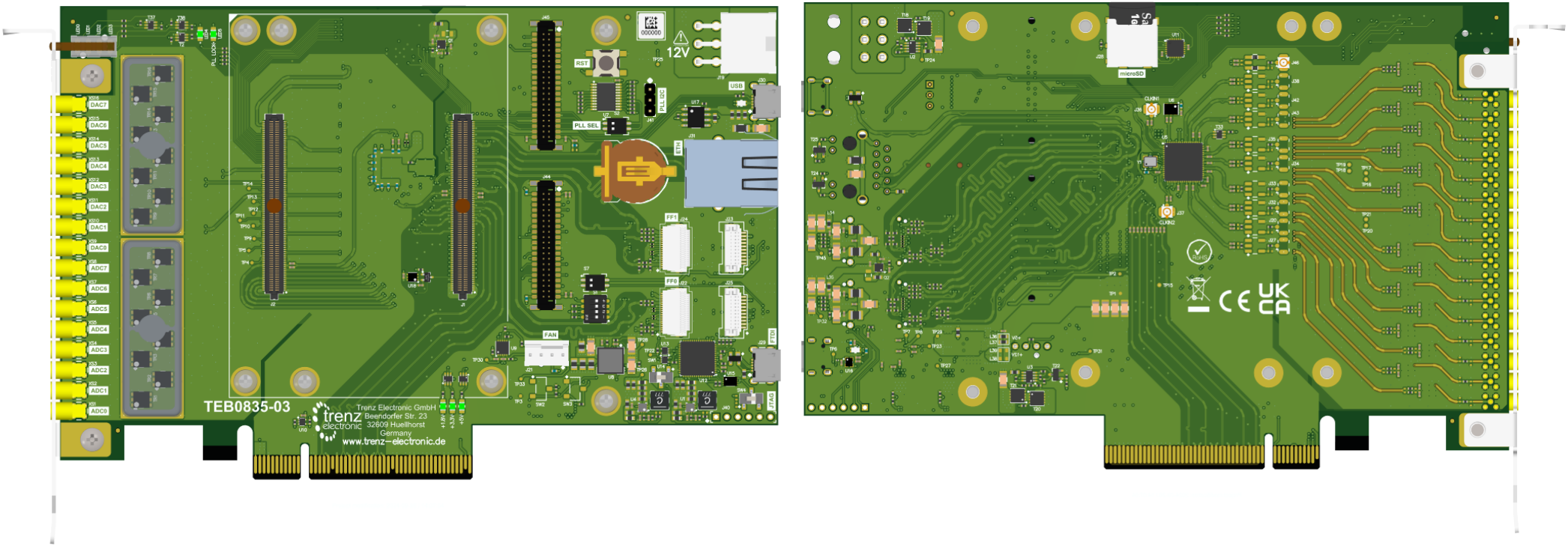

Variant B is compatible with modules that have VIN = 5V to 12V

Regarding the usage of our schematics and alike documentation for Trenz baseboard TEB0835 .
Baseboard is Open Source Hardware and therefore free to use, adapt and can be modified to suit your needs as described in the "The MIT License".
Permission is hereby granted, free of charge, to any person obtaining a copy of this hardware and associated documentation files (the "Product"), to deal in the Product without restriction, including without limitation the rights to use, copy, modify, merge, publish, distribute, sublicense, and/or sell copies of the Product, and to permit persons to whom the Product is furnished to do so.
Schematics and other handouts serve for informational purposes only!

Design drawn by: IG		Title: Legal Notices	
Checked by: MR			
Assembly variant: B		A4	Number: TEB0835 B	Rev. 03
Created by: IG			
Modified by: IG		Date: 2024-05-14	Copyright: Trenz Electronic GmbH	Page 1 of 28
Modified at: 05.06.2025		Filename: Legal Notices.SchDoc	

REVISION HISTORY

REV	Description	
-01	Initial revision	IG
-02	1 All module's mount holes are connected to GND; 2 CLK_Connectors. Added baluns for each clock inputs; 3 Internal DSPLL is changed on SI5395A-A-GM; 4 Added ability to use internal DSPLL as a source for each clock; 5 Added clock inputs CLKIN1, CLKIN2 and clock outputs OUT1 , OUT2 connected to DSPLL.; 6 All clock traces are matched with tolerance 0.2 mm; 7 Lengths of inputs ADC0, ADC2, ADC4, ADC6 are matched with tolerance 0.2 mm; 8 Lengths of outputs DAC0 and DAC2 are matched with tolerance 0.2 mm; 9 Lengths of outputs DAC4, DAC5, DAC6, DAC7 are matched with tolerance 0.2 mm; 10 In REV02: FTDI is powered from 3.3V_Module; 11 Signal PLL_INTR_N is removed; 12 Signal BOARD_PG is renamed in MODULE_PG; 13 Added ability to select enable signal for internal DC-DCs 3.3V and 1.8V. 14 Added JTAG connector J40. 15 Added VBAT schematic. Added a holder for CR1220 3V battery. 16 Resistor R4 changed to 10K (was 1K).	IG
-03	1. Added "Legal Notices" page. 2. Added "Power Diagram" page. 3. Added "Clock Diagram" page. 4. Page "TEB0835" is updated: a. Added a table of I2C Slaves. b. Added PCIe-bracket MECH1. c. Added four plastic standoffs MP1-MP4 (D01468). 5. Page "ADC_Input_Connectors_1": a. Connector designators are changed: J1 → XS1, J5 → XS2, J3 → XS3, J7 → XS4. b. Type of RF connectors XS1, XS2, XS3, XS4 are changed: SMA (5-1814400-1) → SMP (734060241). c. Balun designators are changed: T2 → TR1, T6 → TR2, T4 → TR3, T8 → TR4. d. Type of the baluns TR1, TR2, TR3, TR4 are changed: TCM2-33WX+ → TCM2-43X+. e. Resistors are changed: R10 (DNP) → R10 (1 MOhm), R11 (DNP) → R11 (1 MOhm), R7 (590 Ohm) → R7 (1 MOhm), R6 (17,4 Ohm) → R6 (0 Ohm), R9 (17,4 Ohm) → R9 (0 Ohm), R8 (590 Ohm) → R8 (1 MOhm),R38 (DNP) → R38 (1 MOhm), R39 (DNP) → R39 (1MOhm), R35 (560 Ohm) → R35 (1MOhm), R34 (17,4 Ohm) → R34 (0 Ohm), R37 (17,4 Ohm) → R37 (0 Ohm), R36 (590 Ohm) → R36 (1 MOhm), R24 (DNP) → R24 (1 MOhm), R25 (DNP) → R25 (1 MOhm), R21 (590 Ohm) → R21 (1 MOhm), R20 (17,4 Ohm) → R20 (0 Ohm), R23 (17,4 Ohm) → R23 (0 Ohm), R22 (590 Ohm) → R22 (1 MOhm), R52 (DNP) → R52 (1 MOhm), R53 (DNP) → R53 (1 MOhm), R49 (590 Ohm) → R49 (1 MOhm), R48 (17,4 Ohm) → R48 (0 Ohm), R51 (17,4 Ohm) → R51 (0 Ohm), R50 (590 Ohm) → R50 (1 MOhm). f. Net names are changed: ADC0_IN → ADC_IN0, ADC4_IN → ADC_IN1, ADC2_IN → ADC_IN2, ADC6_IN → ADC_IN2. g. Net names are changed: ADC_S4 → ADC_S1, ADC_S6 → ADC_S3. h. Net names are changed: ADC_B4_(N/P) → ADC_B1_(N/P), ADC_C4_(N/P) → ADC_C1_(N/P), ADC4_(N/P) → ADC1_(N/P), ADC_B6_(N/P) → ADC_B3_(N/P), ADC_C6_(N/P) → ADC_C3_(N/P), ADC6_(N/P) → ADC3_(N/P). i. Added mech part Shield1 (3670412). 6. Page "ADC_Input_Connectors_2": a. Connector designators are changed: J2 → XS5, J4 → XS6, J6 → XS7, J8 → XS8. b. Type of RF connectors XS5, XS6, XS7, XS8 are changed: SMA (5-1814400-1) → SMP (734060241). c. Balun designators are changed: T3 → TR5, T5 → TR6, T7 → TR7, T9 → TR8. d. Type of the baluns TR5, TR6, TR7, TR8 are changed: TCM2-33WX+ → TCM2-43X+. e. Resistors are changed: R17 (DNP) → R17 (1 MOhm), R18 (DNP) → R18 (1 MOhm), R14 (590 Ohm) → R14 (1 MOhm), R13 (17,4 Ohm) → R13 (0 Ohm), R16 (17,4 Ohm) → R16 (0 Ohm), R15 (590 Ohm) → R15 (1 MOhm), R45 (DNP) → R45 (1 MOhm), R46 (DNP) → R46 (1 MOhm), R42 (590 Ohm) → R42 (1 MOhm), R41 (17,4 Ohm) → R41 (0 Ohm), R44 (17,4 Ohm) → R44 (0 Ohm), R43 (590 Ohm) → R43 (1 MOhm), R31 (DNP) → R31 (1 MOhm), R32 (DNP) → R32 (1 MOhm), R28 (590 Ohm) → R28 (1 MOhm), R27 (17,4 Ohm) → R27 (0 Ohm), R30 (17,4 Ohm) → R30 (0 Ohm), R29 (590 Ohm) → R29 (1 MOhm),	IG

REV	Description	
	R27 (17,4 Ohm) → R27 (0 Ohm), R30 (17,4 Ohm) → R30 (0 Ohm), R29 (590 Ohm) → R29 (1 MOhm), R59 (DNP) → R59 (1 MOhm), R60 (DNP) → R60 (1 MOhm), R56 (590 Ohm) → R56 (1 MOhm), R55 (17,4 Ohm) → R55 (0 Ohm), R58 (17,4 Ohm) → R58 (0 Ohm), R57 (590 Ohm) → R57 (1 MOhm). f. Net names are changed: ADC1_IN → ADC_IN4, ADC3_IN → ADC_IN5, ADC5_IN → ADC_IN6, ADC7_IN → ADC_IN7. g. Net names are changed: ADC_S1 → ADC_S4, ADC_S3 → ADC_S5, ADC_S5 → ADC_S6. h. Net names are changed: ADC_B1_(N/P) → ADC_B4_(N/P), ADC_C1_(N/P) → ADC_C4_(N/P), ADC1_(N/P) → ADC4_(N/P), ADC_B3_(N/P) → ADC_B5_(N/P), ADC_C3_(N/P) → ADC_C5_(N/P), ADC3_(N/P) → ADC5_(N/P), ADC_B5_(N/P) → ADC_B6_(N/P), ADC_C5_(N/P) → ADC_C6_(N/P), ADC5_(N/P) → ADC6_(N/P). 7. Page "DAC_Output_Connectors_1": a. Connector designators are changed: J9 → XS9, J10 → XS10, J11 → XS11, J12 → XS12. b. Type of RF connectors XS9, XS10 are changed: SMA (5-1814400-1) → SMP (734060241). c. Type of RF connectors XS11, XS12 are changed: U.FL (U.FL-R-SMT-1) → SMP (734060241). d. Balun designators are changed: T10 → TR9, T12 → TR10, T13 → TR11, T11 → TR12. e. Type of the baluns TR9, TR10, TR11, TR12 are changed: TCM2-33WX+ → TCM2-43X+. f. Net names are changed: DAC0_OUT → DAC_OUT0, DAC1_OUT → DAC_OUT1, DAC2_OUT → DAC_OUT2, DAC3_OUT → DAC_OUT3. g. Resistors are changed: R66 (DNP) → R66 (1 MOhm), R67 (DNP) → R67 (1 MOhm), R63 (590 Ohm) → R63 (1 MOhm), R62 (17,4 Ohm) → R62 (0 Ohm), R65 (17,4 Ohm) → R65 (0 Ohm), R64 (590 Ohm) → R64 (1 MOhm), R73 (DNP) → R73 (1 MOhm), R74 (DNP) → R74 (1 MOhm), R70 (590 Ohm) → R70 (1 MOhm), R69 (17,4 Ohm) → R69 (0 Ohm), R72 (17,4 Ohm) → R72 (0 Ohm), R71 (590 Ohm) → R71 (1 MOhm), R80 (DNP) → R80 (1 MOhm), R81 (DNP) → R81 (1 MOhm), R77 (590 Ohm) → R77 (1 MOhm), R76 (17,4 Ohm) → R76 (0 Ohm), R79 (17,4 Ohm) → R79 (0 Ohm), R78 (590 Ohm) → R78 (1 MOhm), R87 (DNP) → R87 (1 MOhm), R88 (DNP) → R88 (1 MOhm), R84 (590 Ohm) → R84 (1 MOhm), R83 (17,4 Ohm) → R83 (0 Ohm), R86 (17,4 Ohm) → R86 (0 Ohm), R85 (590 Ohm) → R85 (1 MOhm). h. Added mech part Shield2 (3670412). 8. Page "DAC_Output_Connectors_2": a. Connector designators are changed: J13 → XS13, J14 → XS14, J15 → XS15, J16 → XS16. b. Type of RF connectors XS13, XS14, XS15, XS16 are changed: U.FL (U.FL-R-SMT-1) → SMP (734060241). c. Balun designators are changed: T14 → TR13, T15 → TR14, T16 → TR15, T17 → TR16. d. Type of the baluns TR13, TR14, TR15, TR16 are changed: TCM2-33WX+ → TCM2-43X+. e. Net names are changed: DAC4_OUT → DAC_OUT4, DAC5_OUT → DAC_OUT5, DAC6_OUT → DAC_OUT6, DAC7_OUT → DAC_OUT7. f. Resistors are changed: R94 (DNP) → R94 (1 MOhm), R95 (DNP) → R95 (1 MOhm), R91 (590 Ohm) → R91 (1 MOhm), R90 (17,4 Ohm) → R90 (0 Ohm), R93 (17,4 Ohm) → R93 (0 Ohm), R92 (590 Ohm) → R92 (1 MOhm), R101 (DNP) → R101 (1 MOhm), R102 (DNP) → R102 (1 MOhm), R98 (590 Ohm) → R98 (1 MOhm), R97 (17,4 Ohm) → R97 (0 Ohm), R100 (17,4 Ohm) → R100 (0 Ohm), R99 (590 Ohm) → R99 (1 MOhm), R108 (DNP) → R108 (1 MOhm), R109 (DNP) → R109 (1 MOhm), R105 (590 Ohm) → R105 (1 MOhm), R104 (17,4 Ohm) → R104 (0 Ohm), R107 (17,4 Ohm) → R107 (0 Ohm), R106 (590 Ohm) → R106 (1 MOhm), R115 (DNP) → R115 (1 MOhm), R116 (DNP) → R116 (1 MOhm), R112 (590 Ohm) → R112 (1 MOhm), R111 (17,4 Ohm) → R111 (0 Ohm), R114 (17,4 Ohm) → R114 (0 Ohm), R113 (590 Ohm) → R113 (1 MOhm).	IG

trenz electronic	Title: Revision_Changes		
A4	Number: TEB0835 B		Rev. 03
Date: 2024-12-17	Copyright: Trenz Electronic GmbH		Page 2 of 28
Filename: Revision_Changes_1.SchDoc			

REVISION HISTORY

REV	Description	
	9. Page "CLK_Connectors_1": R161, R166, R175, R226, R229, R232 (DNP) → (1 MOhm). 10. Page "CLK_Connectors_2": a. Type of J36 connector are changed: U.FL (U.FL-R-SMT-1) → SMA (R125426000). b. Added RFSoC PL synchronisation scheme via B65_L11_(P/N) from PLL CLKOUT8_(P/N). Also added possibility of synchronisation from external source via J42, R158, T34, C124, C126. c. Added RFSoC PL synchronisation scheme via B65_L12_(P/N) from PLL CLKOUT7_(P/N). Also added possibility of synchronisation from external source via J43, R242, T35, C129, C131. d. Added RFSoC Module PLL synchronisation. External clock can be applied to EXT_CLK_IN1_(P/N) via SMA J46 (R125426000), R224, T36 or R287. 11. Page "B2B_JB1": a. B2B connector designator is changed: J17 → JB1. b. Module power rail is renamed to V_Module. c. Added TP33. 12. Page "B2B_JB2": a. B2B connector designator is changed: J18 → JB2. b. Pins 1 and 2 of JB2 connected to GND. c. Clock CLKA_(P/N) (JB2:36 and JB2:38) connected to J45 (A2 and B1). d. B65_L1_(P/N) (JB2:15 and JB2:17) connected to J45 (B7 and A8). e. B65_L2_(P/N) (JB2:6 and JB2:4) connected to J45 (B13 and A14). f. B65_L3_(P/N) (JB2:3 and JB2:5) connected to J45 (B12 and A12). g. B65_L4_(P/N) (JB2:16 and JB2:14) connected to J45 (B16 and A17). h. B65_L5_(P/N) (JB2:10 and JB2:8) connected to J45 (B15 and A15). i. B65_L6_(P/N) (JB2:11 and JB2:13) connected to J45 (B9 and A9). j. B65_L8_(P/N) (JB2:19 and JB2:21) connected to J45 (B6 and A6). k. B65_L9_(P/N) (JB2:7 and JB2:9) connected to J45 (B10 and A11). l. B65_L11_(P/N) (JB2:22 and JB2:20) connected to CLKOUT8 on page "CLK_Connectors_2". m. B65_L12_(P/N) (JB2:18 and JB2:16) connected to CLKOUT7 on page "CLK_Connectors_2". n. B65_L13_(P/N) (JB2:25 and JB2:23) connected to CLKOUT9A on page "DSPLL". o. B65_L16_(P/N) (JB2:24 and JB2:26) connected to J45 (B18 and A18). p. EXT_CLK_IN1_(P/N) connected to balun T36 on page "CLK_Connectors_2". q. Schematic of battery supply is changed: diode D13 moved to LDO U18 input, C86 (4,7uF) → C86 (470nF), U18 (TPS780180300) → U18 (TPS7A0212PDBVR). r. Status LEDs D6-D10 are renamed to LED0_LED3, D11 is removed. The LEDs are moved to "EXT_Connectors" page. s. Resistors are changed: R216-R221 (330 Ohms) → R216-R221 (33 Ohms). t. Added terminators R120, R291, R193 on clocks output CLKD, CLKE, CLKF. 13. Page "POWER": a. Capasitor C37 are changed 10nF → 1nF to adjust inrush current. b. Transistors T18-T21 (SIS444DN-T1-GE3 - EOL) are replaced with SIS4604LDN-T1-GE3. 14. Page "PWR_1V8": a. DC-DC U1 TPS82085SIL converter replaced by TPS62913RPUR for noise reduction and VIN 12V capability. 15. Page "PWR_3V3": a. DC-DC U4 TPS82085SIL converter replaced by TPS62913RPUR for noise reduction and VIN 12V capability. 16. Page "PWR_5V": a. Added a switch SW3 to disable DC-DC U8. b. Added a switch SW2 to enable discontinuos mode of DC-DC U8. c. Added inductors L38 and L39 for connecting V_MODULE to 12V. 17. Page "I2C_MUX": a. Added pull-up resistors R262 - R265. 18. Page "SD": a. The load switch Q1 is replaced by MP5077GG-Z with integrated overload protection circuitry. 19. Page "FTDI": a. Added LDO regulator U19, diodes D6, D7, C217, L19 to provide 3.3V_FTDI voltage. b. Added JTAG switch U14. c. Resistors R237-R240 are removed. d. UART buffer U13 is replaced SN74LVC1G07DRL→ SN74AVC4T774RSVR. e. Added USB filter L25	IG

REV	Description	
	20. Page "MicroUSB": a. Resistor R223 is DNP by default. 21. Page DSPLL: a. CLKOUT7 connected to B65_L12. b. CLKOUT8 connected to B65_L11. c. CLKOUT9 connected to SYSREFCLK. d. CLKOUT9A connected toB65_L13. e. CLKIN3 doesn't use. 22. Page FireFly: a. Added detect network R246-R383 according to FireFly specification. 23. Page FF_0_1: a. Added power switch Q2. b. Added terminators R296-R299, RR302,R303, R307-R310, R312, R313, R317, R320, R403-R05, R408. c. Added a slide switch S7 for FireFly configuration. d. Added pull-up resistors R288, R289, R390, R387, R409, R410. 24. Added page EXT_Connectors: a. Added MIO connector J44 and GPIO connector J45. b. Added transistors T2, T37, T38. c. Added a lightpipe LP1.	IG
-03	25. Changed screws MECH3, MECH4 from metric M3 to inch UNC4-40 1/4". 26. Added covers MECH2; MECH5 3671412 for Shield1 and Shield2. 27. Resistor R181 replaced with 0 Ohm to switch U8 in discontinuos mode of operation. 28. Capacitors C62, C63, C64 are marked as DNP for noise reduction.	IG 29.04.25

trenz electronic	Title: Revision_Changes		
A4	Number: TEB0835 B		Rev. 03
Date: 2025-04-29	Copyright: Trenz Electronic GmbH		Page 3 of 28
	Filename: Revision_Changes_2.SchDoc		

Power-on sequencing

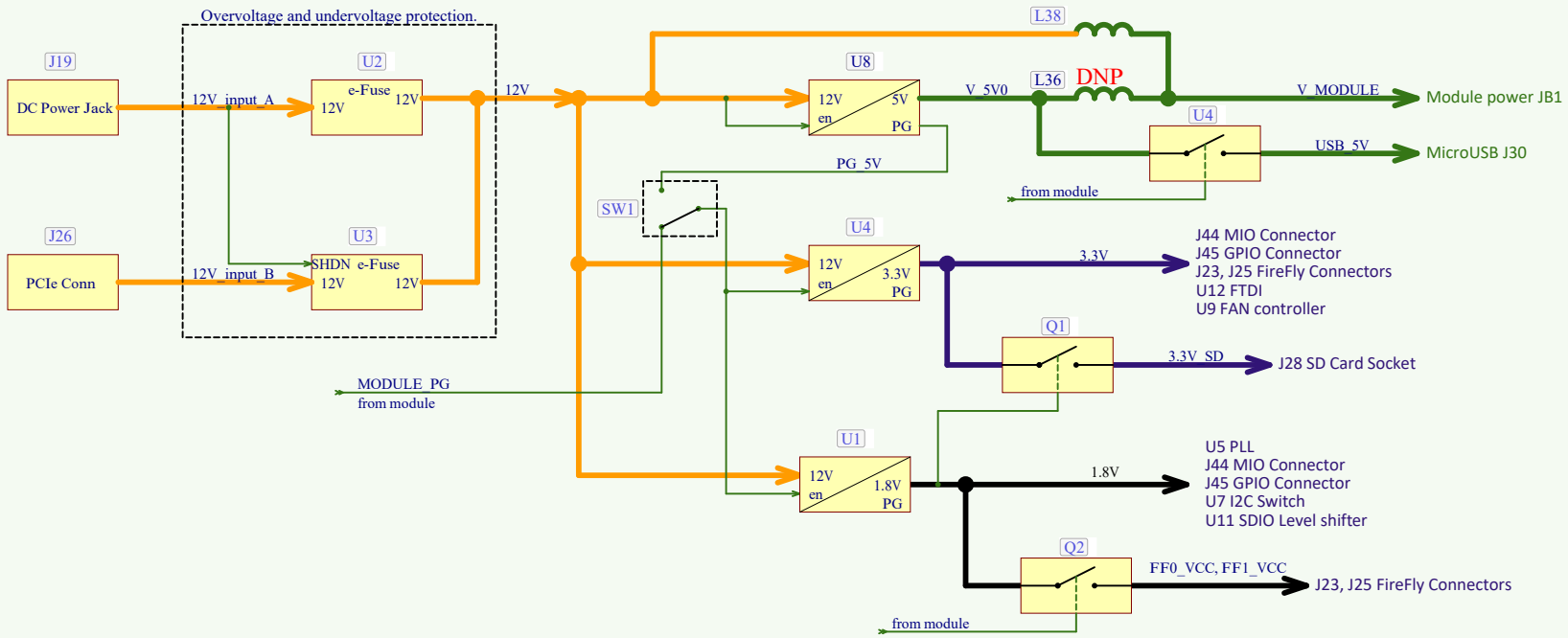

Supported Voltage Ranges:

Power Rail	Direction	Range	Tolerance	Description	Note
12V_input_A	IN	12V	±10%	External Power	MiniFit 6-pin conn
12V_input_B	IN	12V	±10%	External Power	PCIe Edge conn
V_MODULE	OUT	5V	±3%	Micromodule Power	12V±10% (Option)
5V	OUT	5V	±3%	MicroUSB	-
3.3V	OUT	3.3V	±3%	J44, J45 FireFly conn	-
3.3V_SD	OUT	3.3V	±3%	J28 SD Card Socket	-
1.8V	OUT	1.8V	±3%	J44, J45 FireFly conn	-
FF0_VCC	OUT	1.8V	±3%	J44 FireFly conn	-
FF1_VCC	OUT	1.8V	±3%	J45 FireFly conn	-

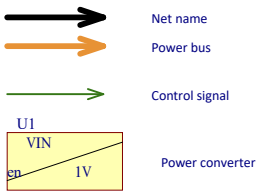

trenz electronic	Title: Power_Diagram		
A4	Number: TEB0835 B		Rev. 03
Date: 2024-05-14	Copyright: Trenz Electronic GmbH		Page4 of 28
Filename: Power_Diagram.SchDoc			

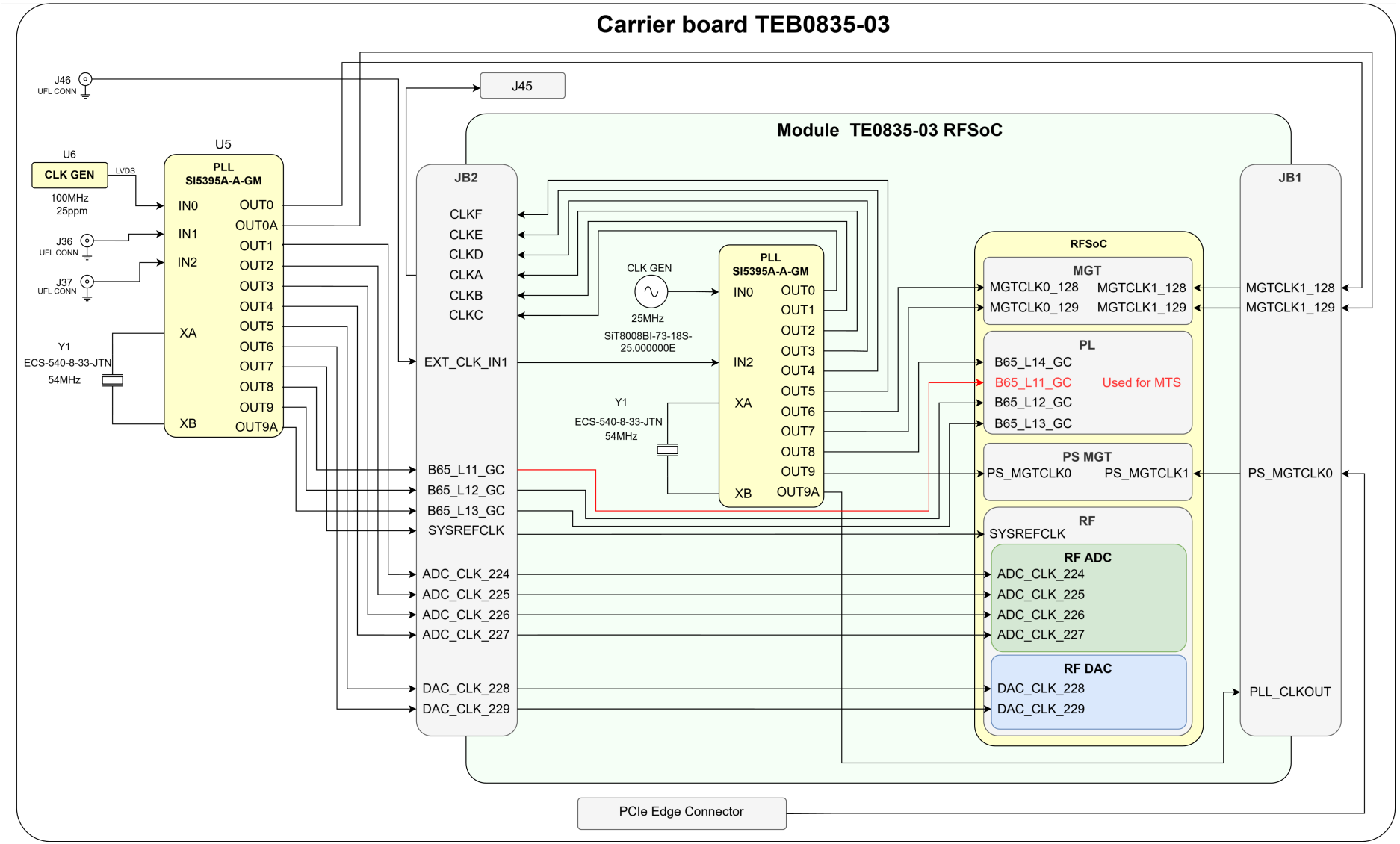

trenz electronic	Title: Clock_Diagram		
A4	Number: TEB0835 B		Rev. 03
Date: 2024-12-17	Copyright: Trenz Electronic GmbH		Page 5 of 28
	Filename: Clock_Diagram.SchDoc		

A1
ADC_Input_Connectors_1.SchDoc

A2
ADC_Input_Connectors_2.SchDoc

A3
B2B_JB1.SchDoc

A4
B2B_JB2.SchDoc

A5
CLK_Connectors_1.SchDoc

A6
CLK_Connectors_2.SchDoc

A7
DAC_Output_Connectors_1.SchDoc

A8
DAC_Output_Connectors_2.SchDoc

A9
DSPLL.SchDoc

A10
ETH-PHY.SchDoc

A11
EXT_Connectors.SchDoc

A12
FireFly.SchDoc

A13
FTDI.schdoc

A14
I2C_MUX.SchDoc

A15
MicroUSB.SchDoc

A16
PCIE_CONN.SchDoc

A17
POWER.SchDoc

A18
SD.SchDoc

Table of I2C Addresses

I2C Address	Designator	Description
0x70	U7	I2C Multiplexer
0x4C	U9	FAN Controller
0x68	U5	PLL

Special notes:

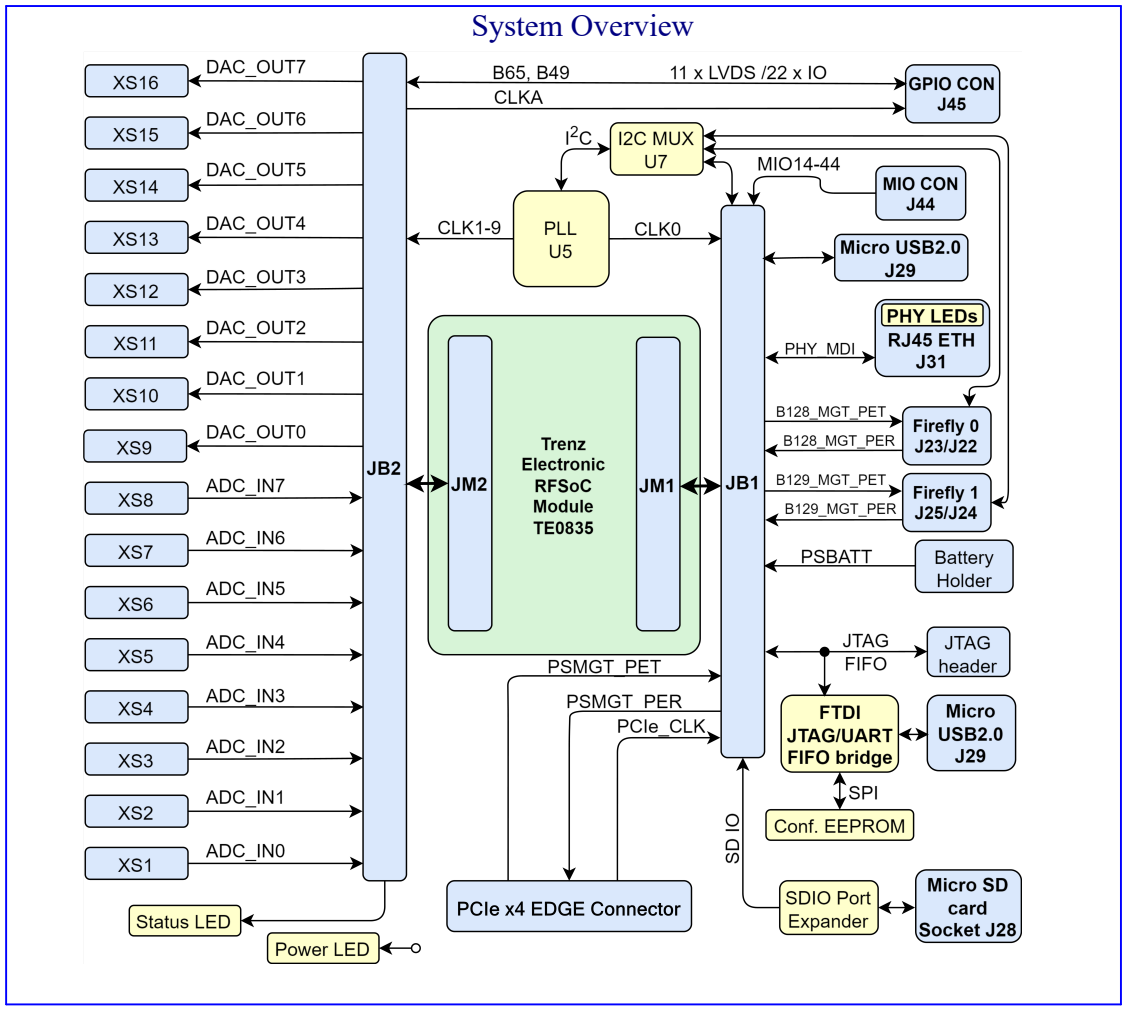

PM1 PM2 PM3

FIDU-DOT - mini FIDU-DOT - mini FIDU-DOT - mini

PM4 PM5 PM6

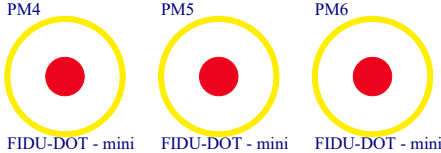

FIDU-DOT - mini FIDU-DOT - mini FIDU-DOT - mini

MECH1

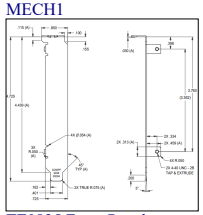

TE0835 Front Panel

Screw UNC4-40 1/4"

Screw UNC4-40 1/4"

Serial1
Serial
Serialnumber 6,3 x 6.3mm

UKCA
UKCA Logo on Top Overlay
UKCA-TOPOVERLAY

LOGO1
TE Logo PRINT Layer
LOGO PRINT

MP1 MP2 MP3 MP4

D01468 D01468 D01468 D01468

Title: TEB0835			
A4	Number: TEB0835 B		Rev. 03
Date: 2025-05-19	Copyright: Trenz Electronic GmbH		Page 6 of 28
Filename: TEB0835.SchDoc			

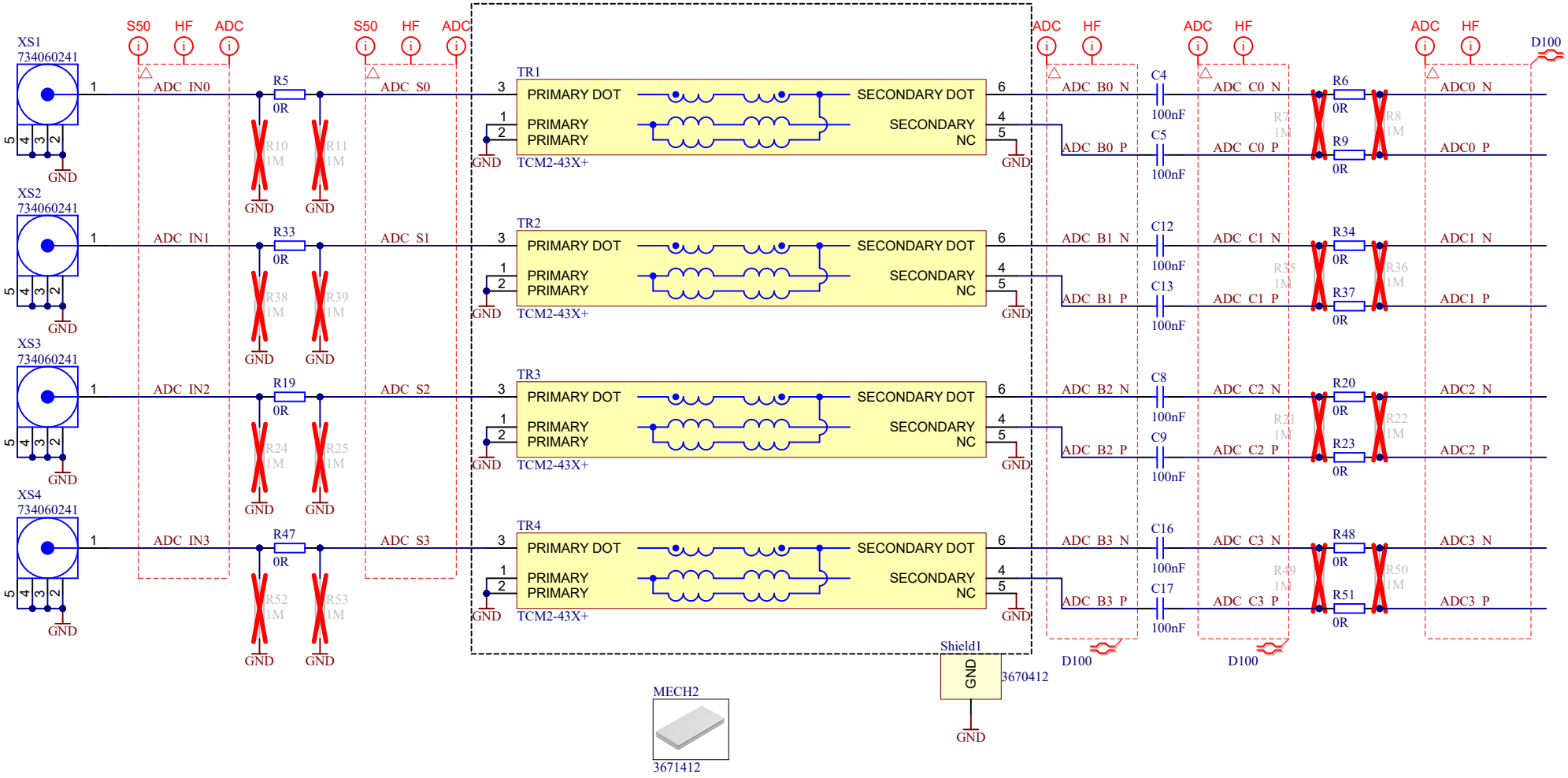

trenz electronic	Title: ADC_Input_Connectors_1		
A4	Number: TEB0835 B		Rev. 03
Date: 2025-04-29	Copyright: Trenz Electronic GmbH		Page 7 of 28
	Filename: ADC_Input_Connectors_1.SchDoc		

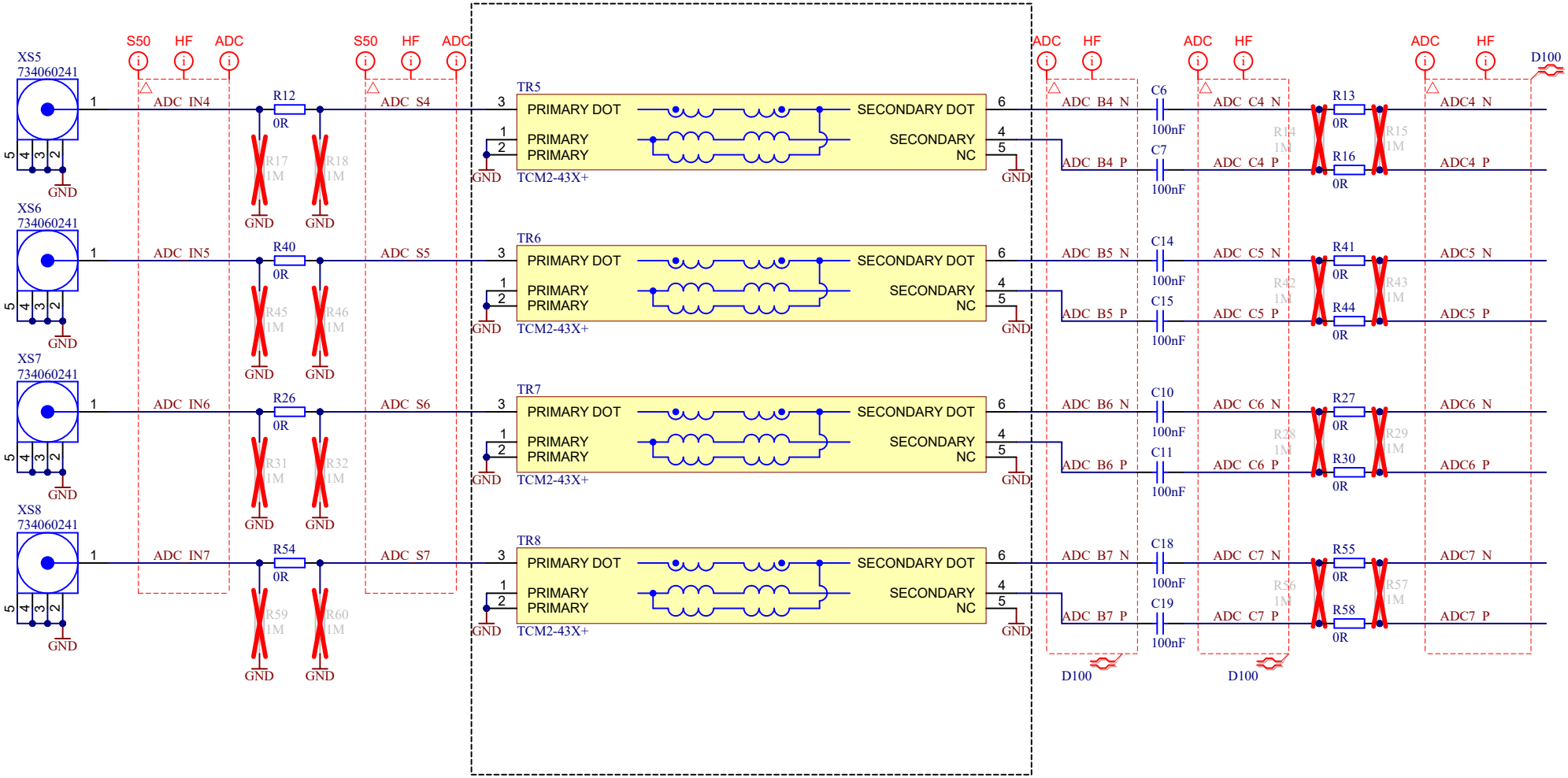

trenz electronic	Title: ADC_Input_Connectors_2		
A4	Number: TEB0835 B		Rev. 03
Date: 2024-12-17	Copyright: Trenz Electronic GmbH		Page 8 of 28
	Filename: ADC_Input_Connectors_2.SchDoc		

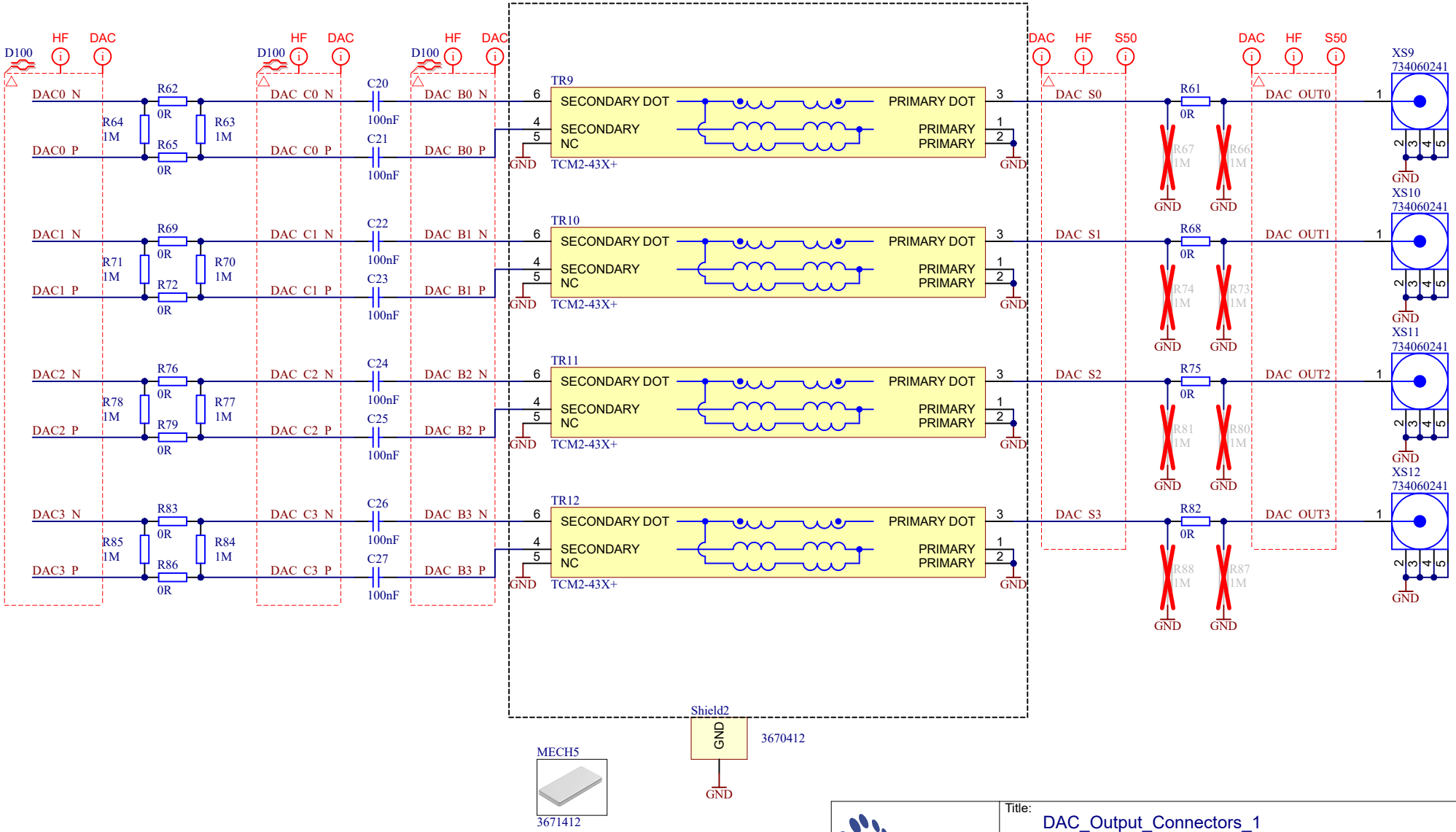

trenz electronic	Title: DAC_Output_Connectors_1		
A4	Number: TEB0835 B		Rev. 03
Date: 2025-04-29	Copyright: Trenz Electronic GmbH		Page 9 of 28
	Filename: DAC_Output_Connectors_1.SchDoc		

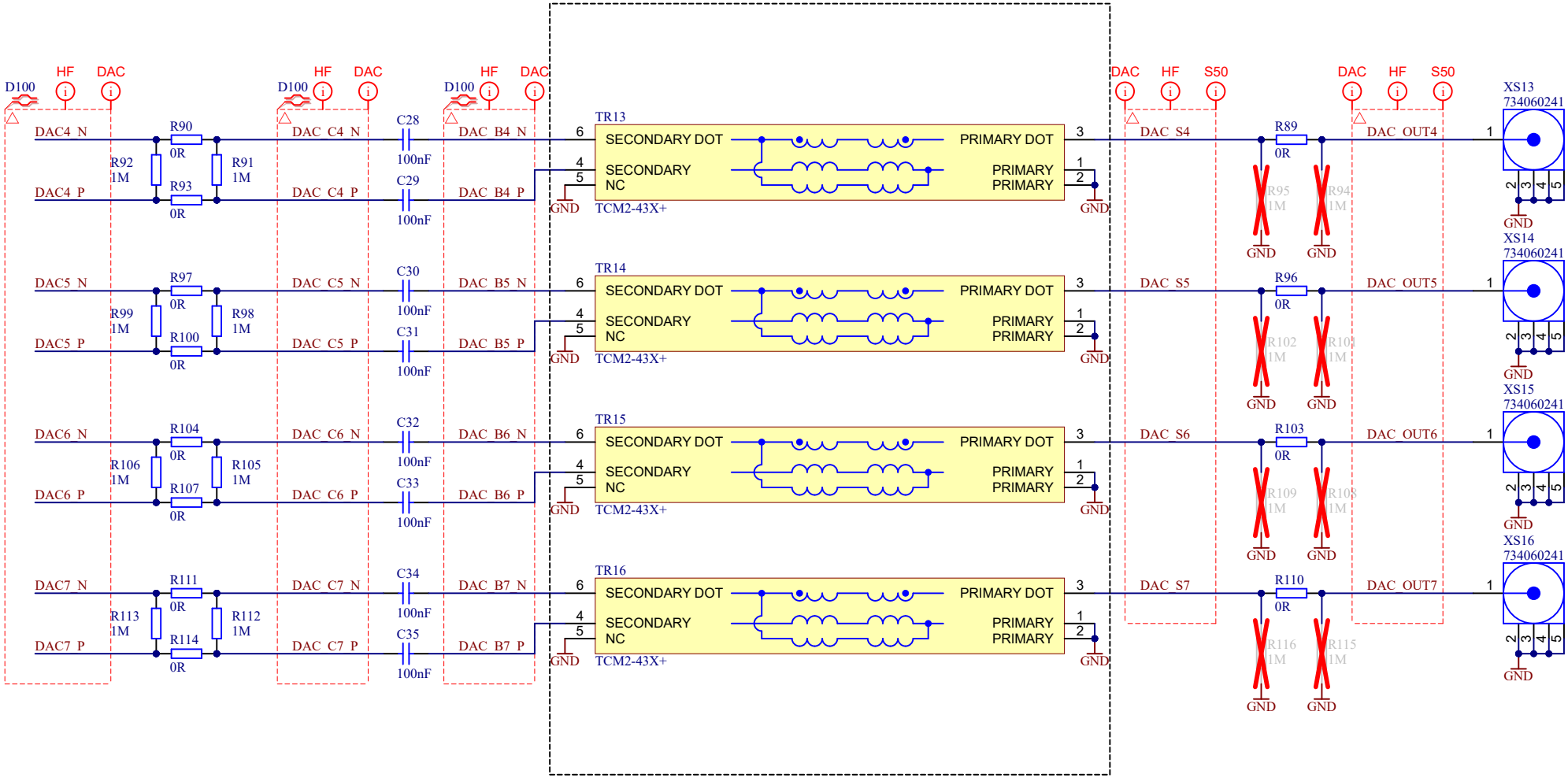

trenz electronic	Title: DAC_Output_Connectors_2		
A4	Number: TEB0835 B		Rev. 03
Date: 2024-12-17	Copyright: Trenz Electronic GmbH		Page 10 of 28
Filename: DAC_Output_Connectors_2.SchDoc			

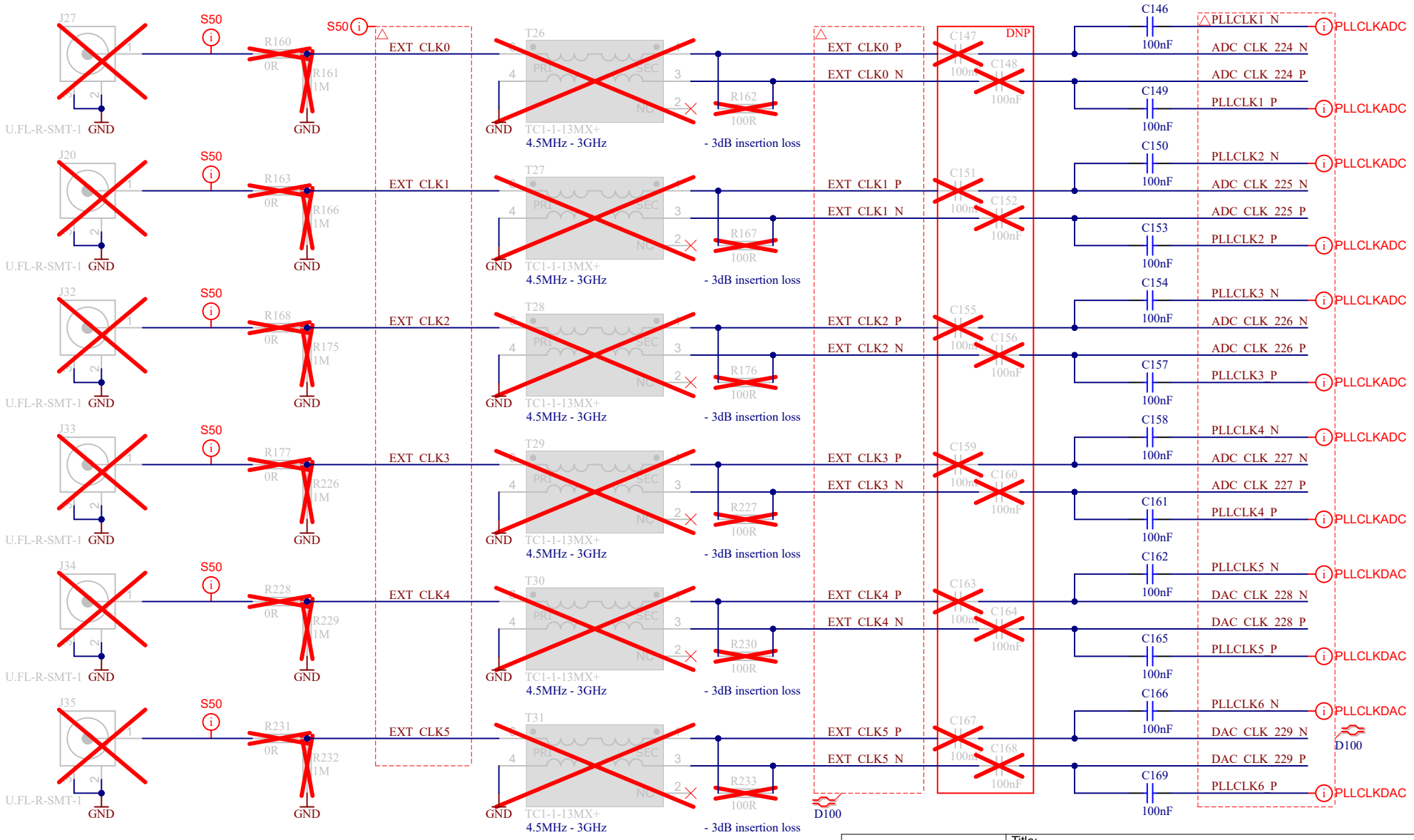

trenz electronic	Title: CLK_Connectors_1		
A4	Number: TEB0835 B		Rev. 03
Date: 2024-12-17	Copyright: Trenz Electronic GmbH		Page 11 of 28
	Filename: CLK_Connectors_1.SchDoc		

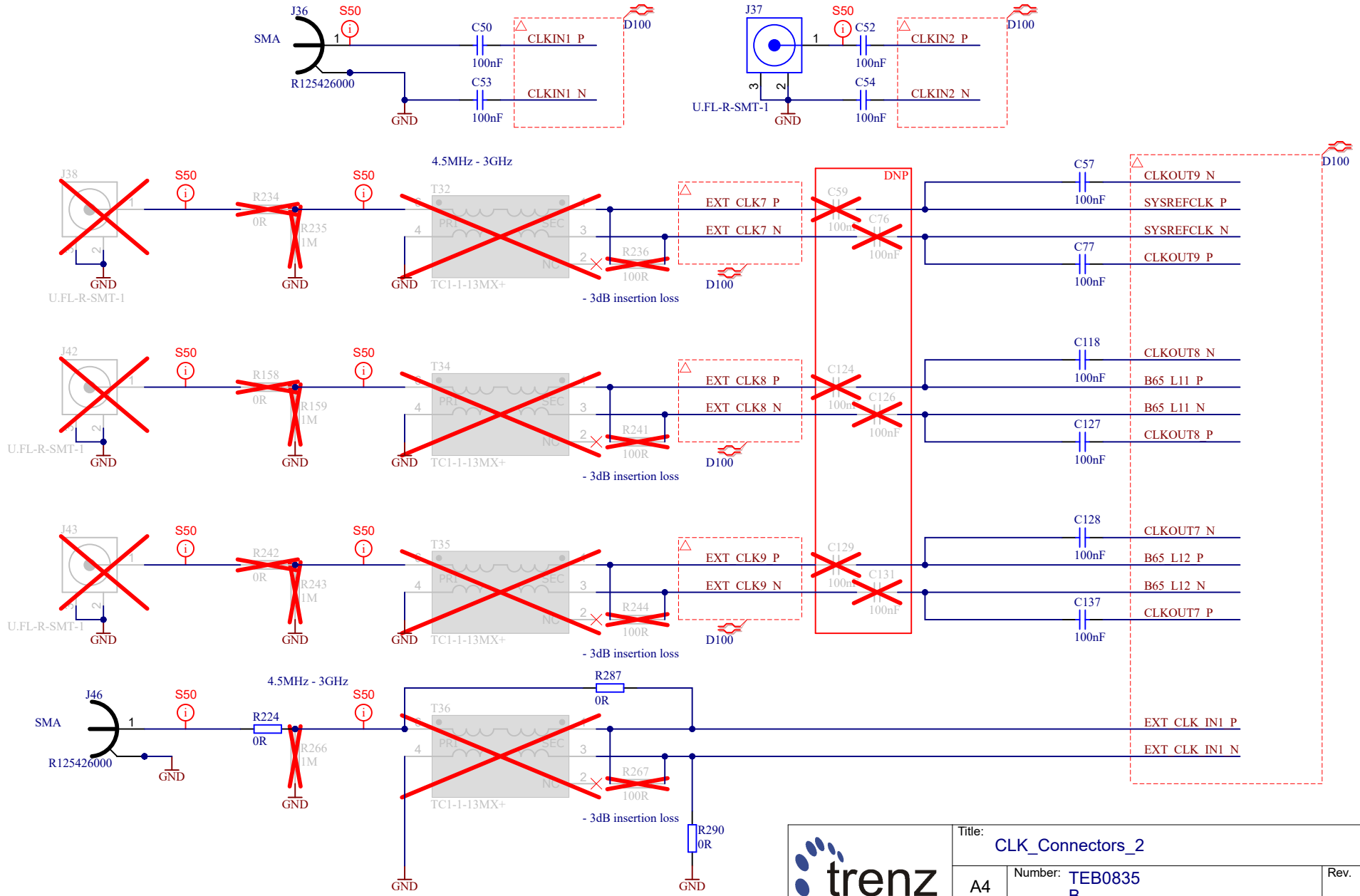

trenz electronic	Title: CLK_Connectors_2		
A4	Number: TEB0835 B		Rev. 03
Date: 2024-12-17	Copyright: Trenz Electronic GmbH		Page 12 of 28
	Filename: CLK_Connectors_2.SchDoc		

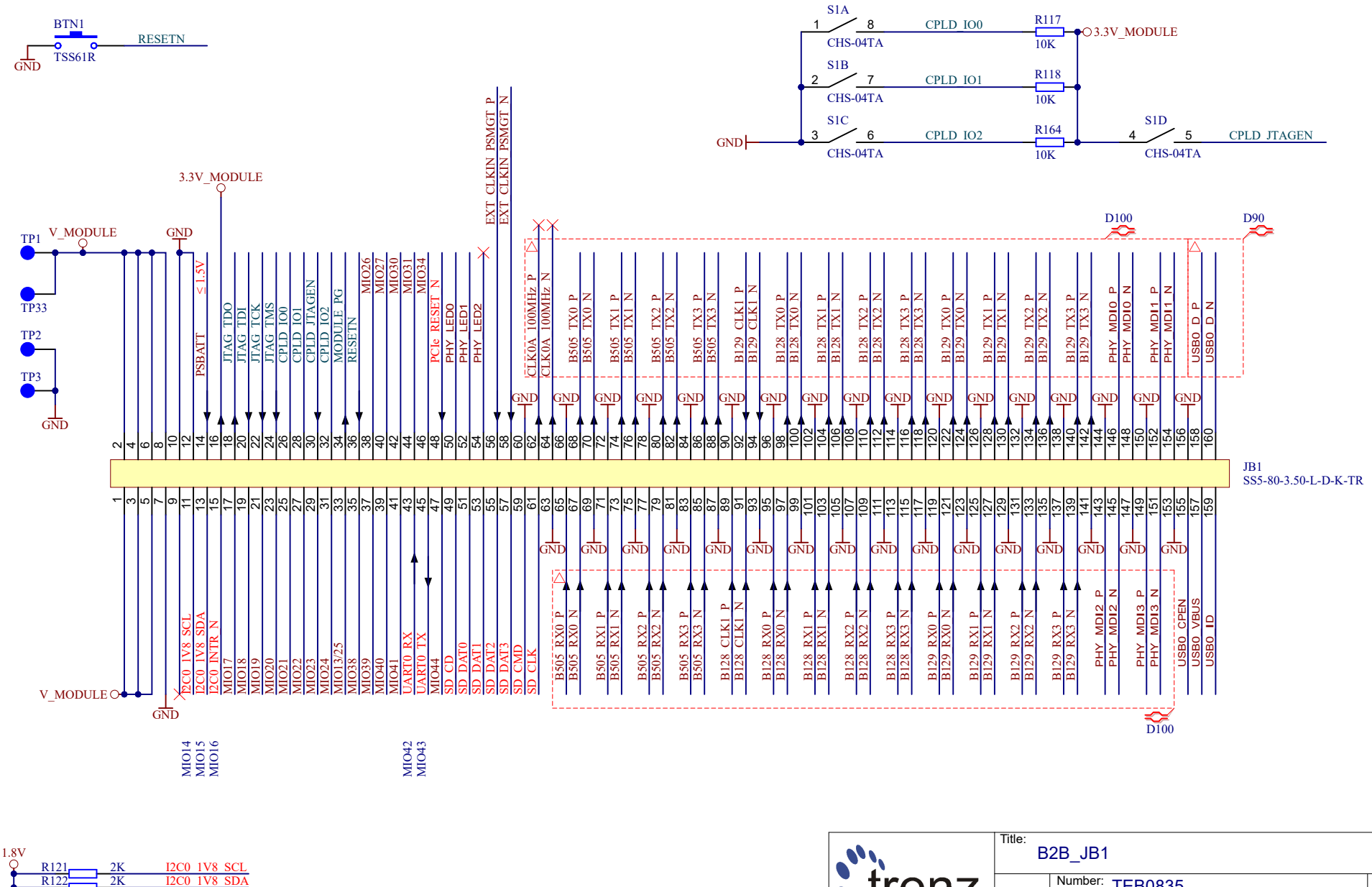

Title: B2B_JB1		
A4	Number: TEB0835 B	Rev. 03
Date: 2025-03-28	Copyright: Trenz Electronic GmbH	Page 13 of 28
Filename: B2B_JB1.SchDoc		

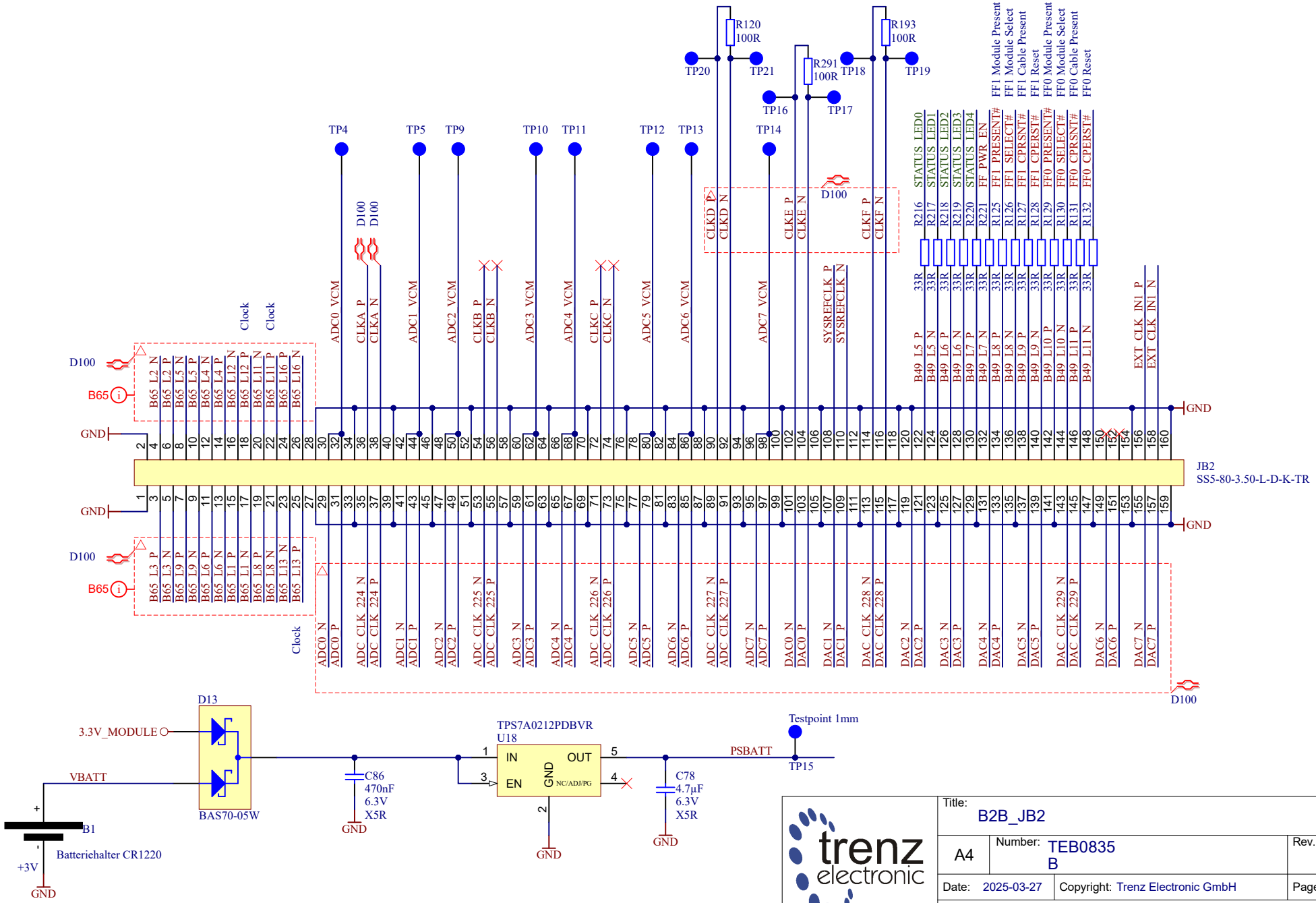

trenz electronic

Title: B2B_JB2			
A4	Number: TEB0835 B		Rev. 03
Date: 2025-03-27	Copyright: Trenz Electronic GmbH		Page 14 of 28
Filename: B2B_JB2.SchDoc			

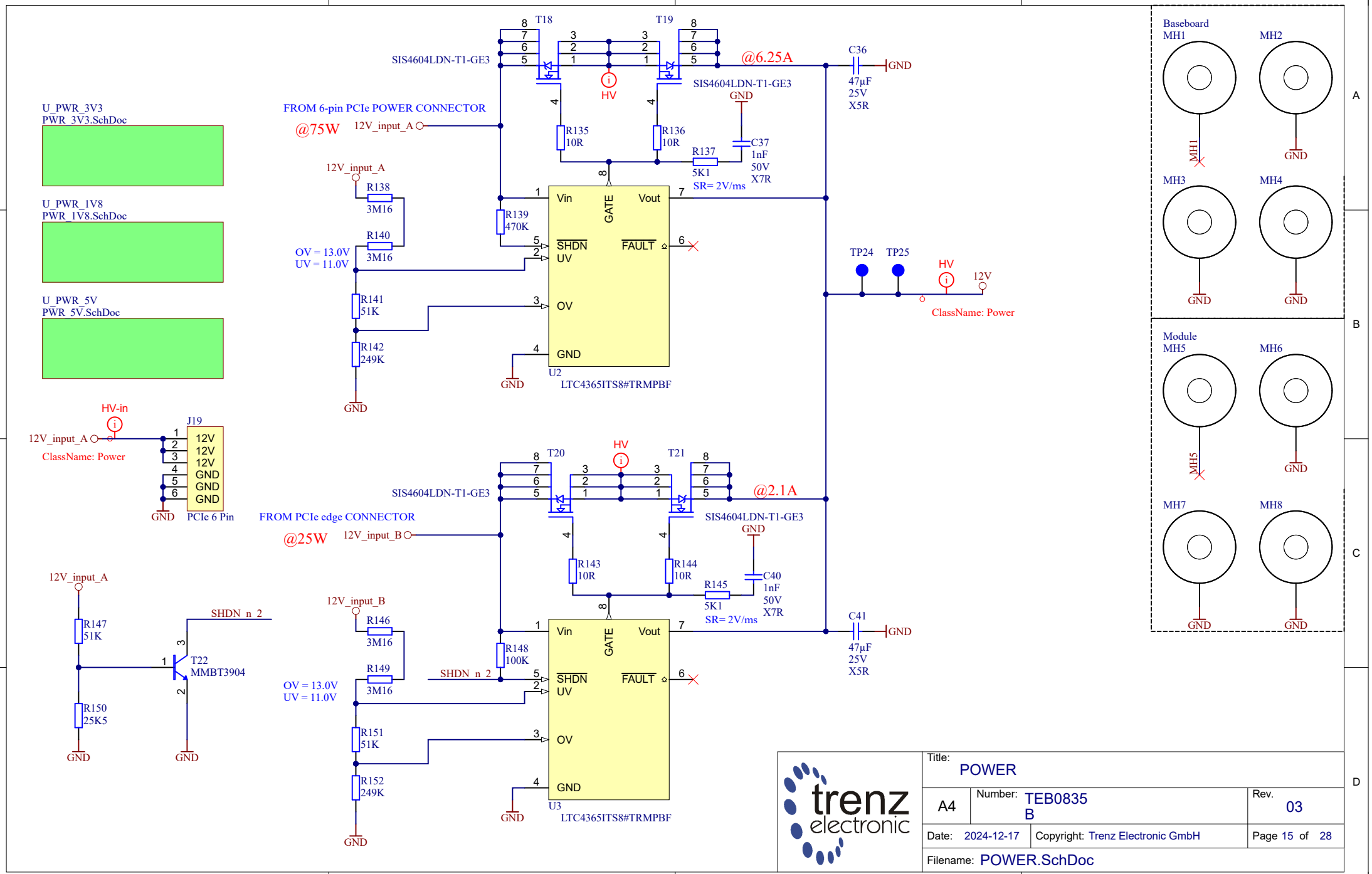

trenz electronic	Title: POWER		
A4	Number: TEB0835 B		Rev. 03
Date: 2024-12-17	Copyright: Trenz Electronic GmbH		Page 15 of 28
	Filename: POWER.SchDoc		

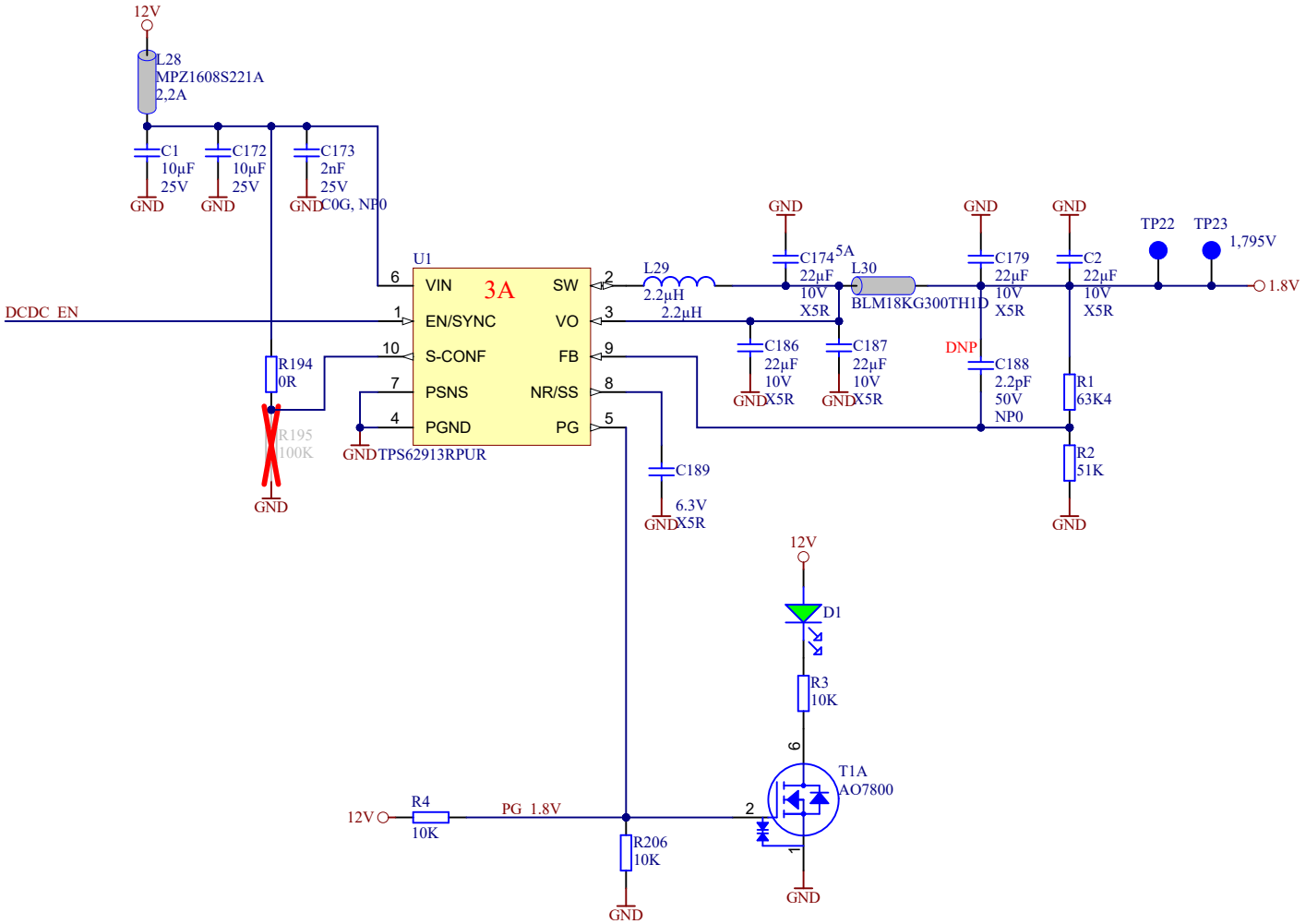

trenz electronic	Title: PWR_1V8		
A4	Number: TEB0835 B		Rev. 03
Date: 2024-12-17	Copyright: Trenz Electronic GmbH		Page 16 of 28
	Filename: PWR_1V8.SchDoc		

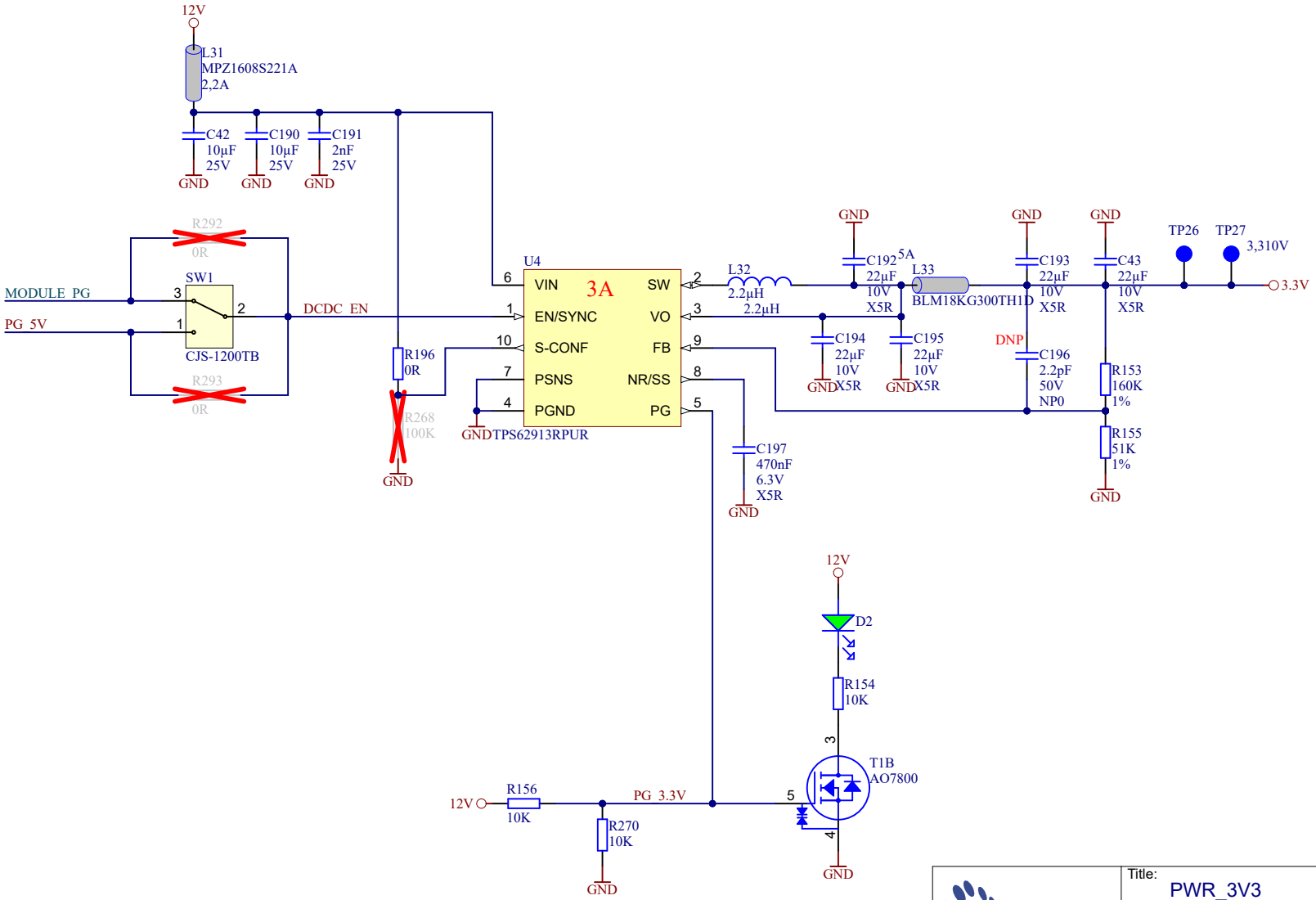

trenz electronic

Title: PWR_3V3		
A4	Number: TEB0835 B	Rev. 03
Date: 2024-12-17	Copyright: Trenz Electronic GmbH	Page 17 of 28
Filename: PWR_3V3.SchDoc		

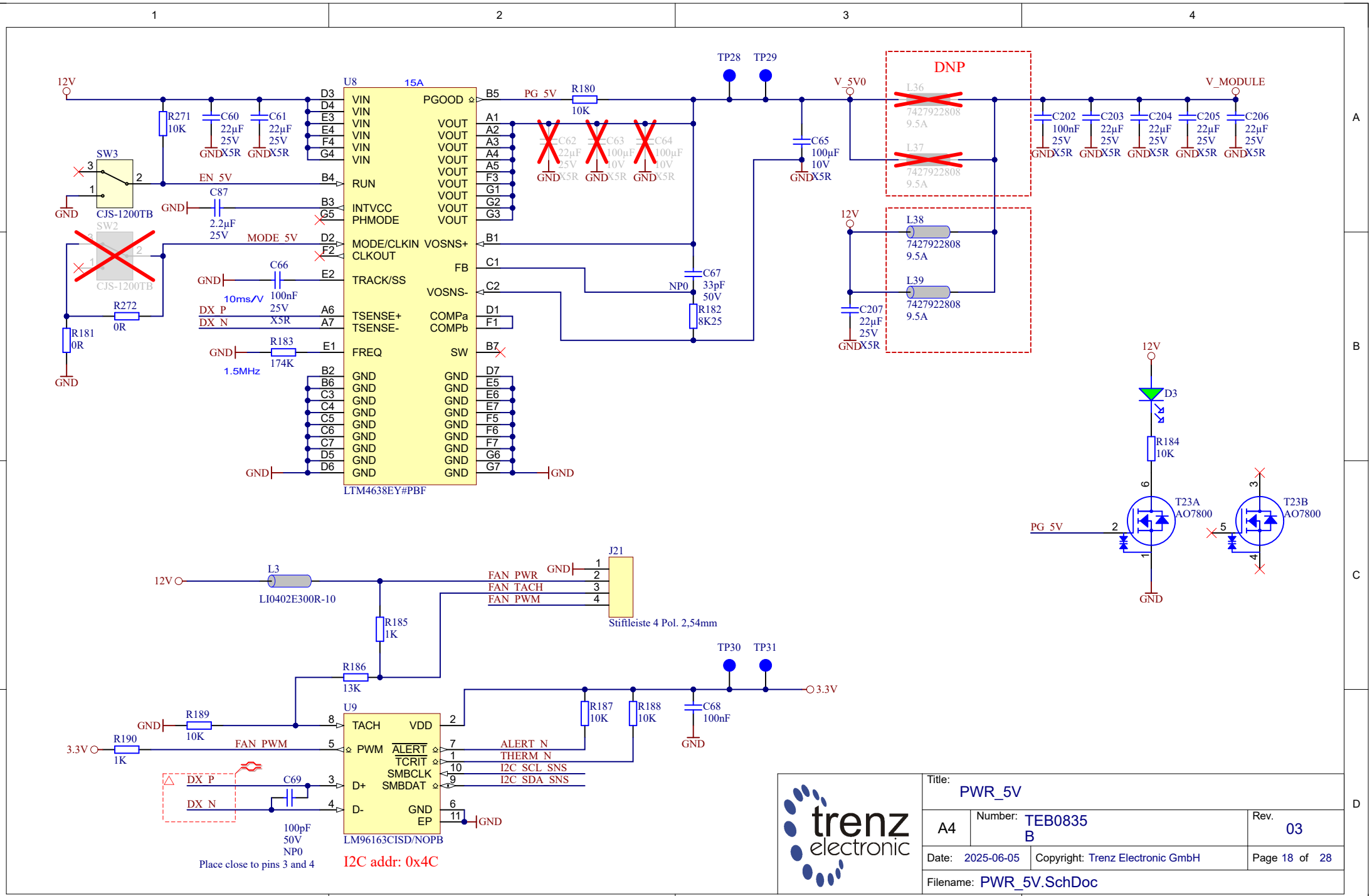

trenz electronic	Title: PWR_5V		
A4	Number: TEB0835 B		Rev. 03
Date: 2025-06-05	Copyright: Trenz Electronic GmbH		Page 18 of 28
	Filename: PWR_5V.SchDoc		

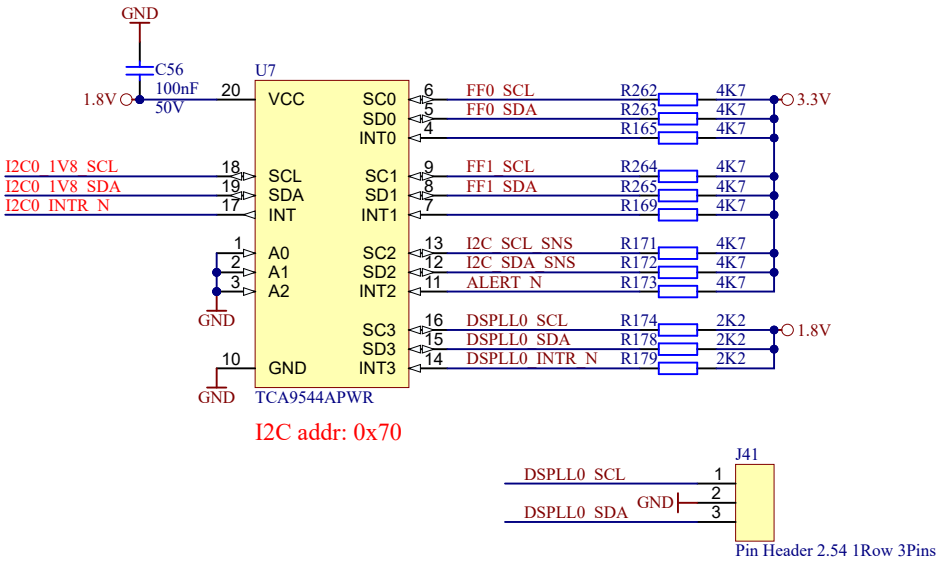

trenz electronic	Title: I2C_MUX		
A4	Number: TEB0835 B		Rev. 03
Date: 2024-12-17	Copyright: Trenz Electronic GmbH		Page 19 of 28
	Filename: I2C_MUX.SchDoc		

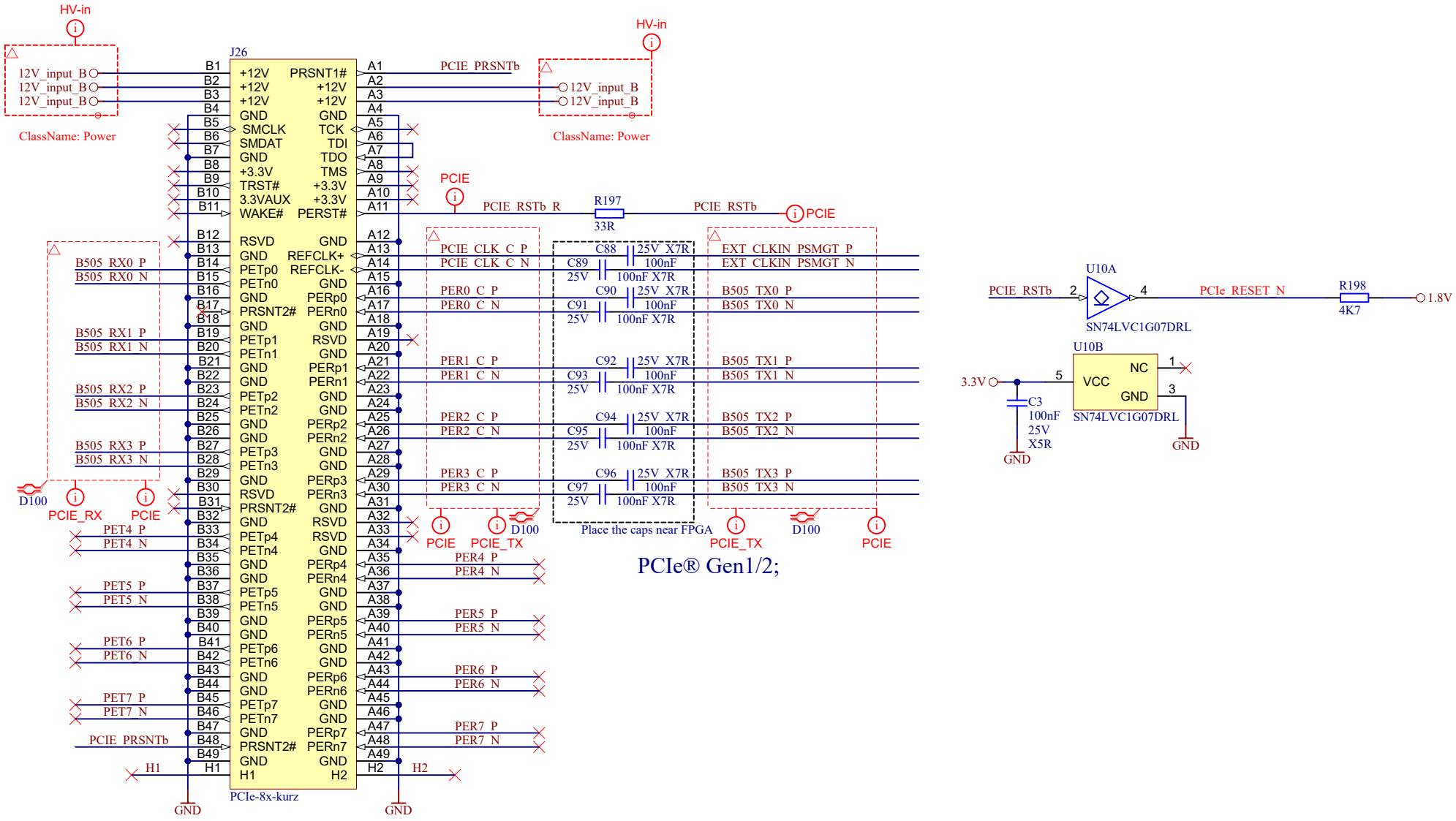

Title: PCIE_CONN		
A4	Number: TEB0835 B	Rev. 03
Date: 2024-12-17	Copyright: Trenz Electronic GmbH	Page 20 of 28
Filename: PCIE_CONN.SchDoc		

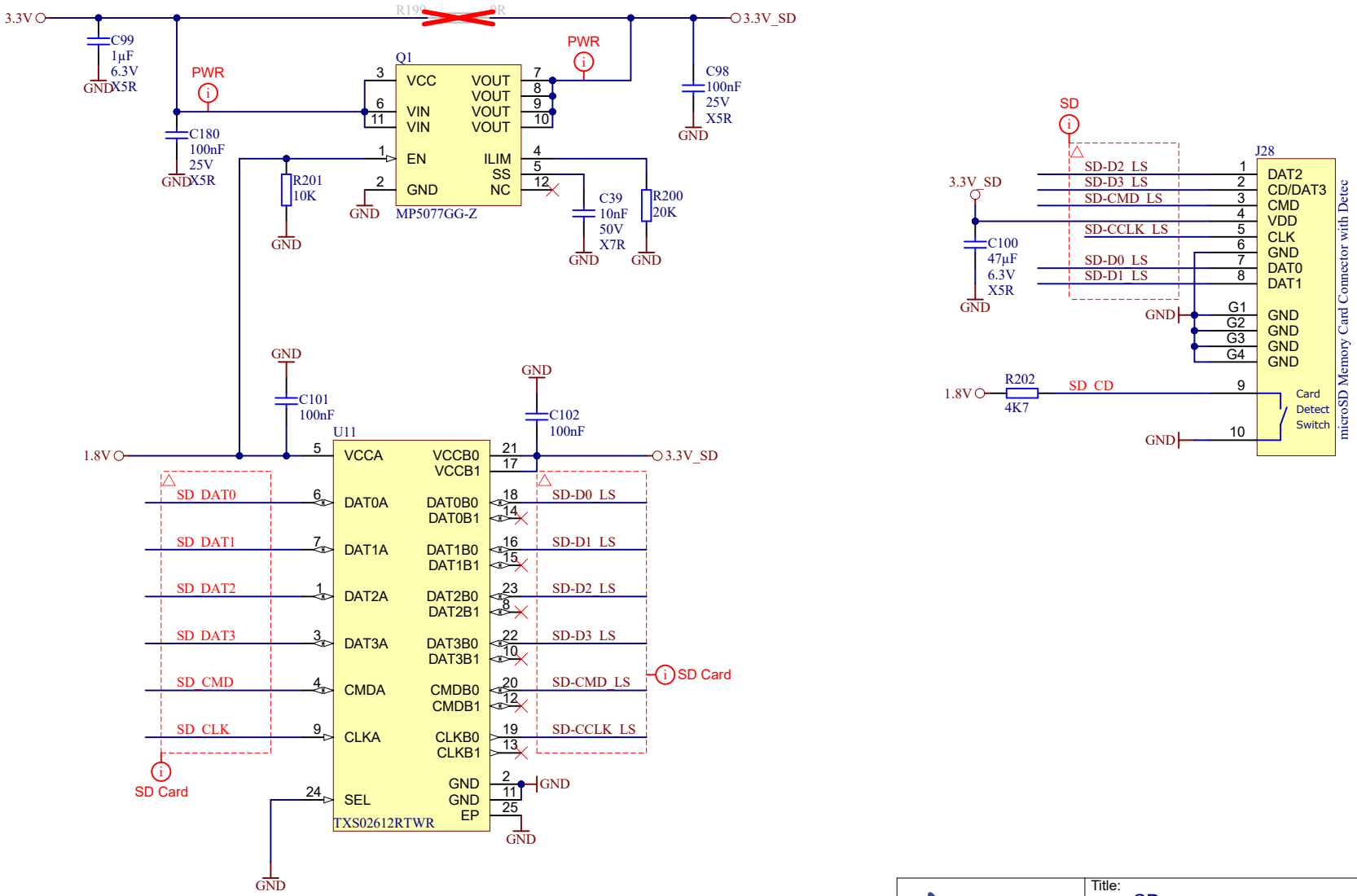

trenz electronic	Title: SD		
A4	Number: TEB0835 B		Rev. 03
Date: 2024-12-17	Copyright: Trenz Electronic GmbH		Page 21 of 28
	Filename: SD.SchDoc		

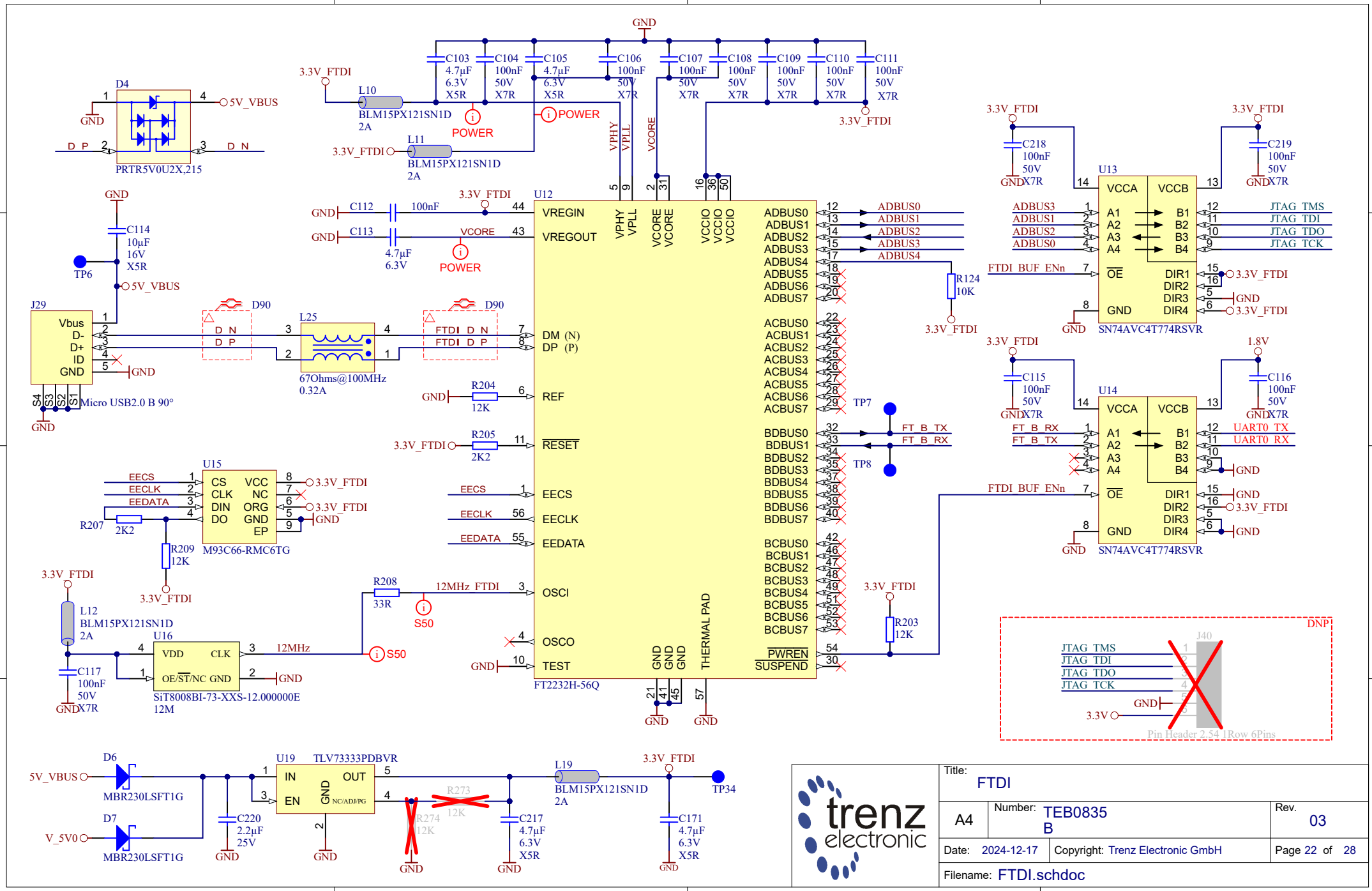

Title: FTDI		
A4	Number: TEB0835 B	Rev. 03
Date: 2024-12-17	Copyright: Trenz Electronic GmbH	Page 22 of 28
Filename: FTDI.schdoc		

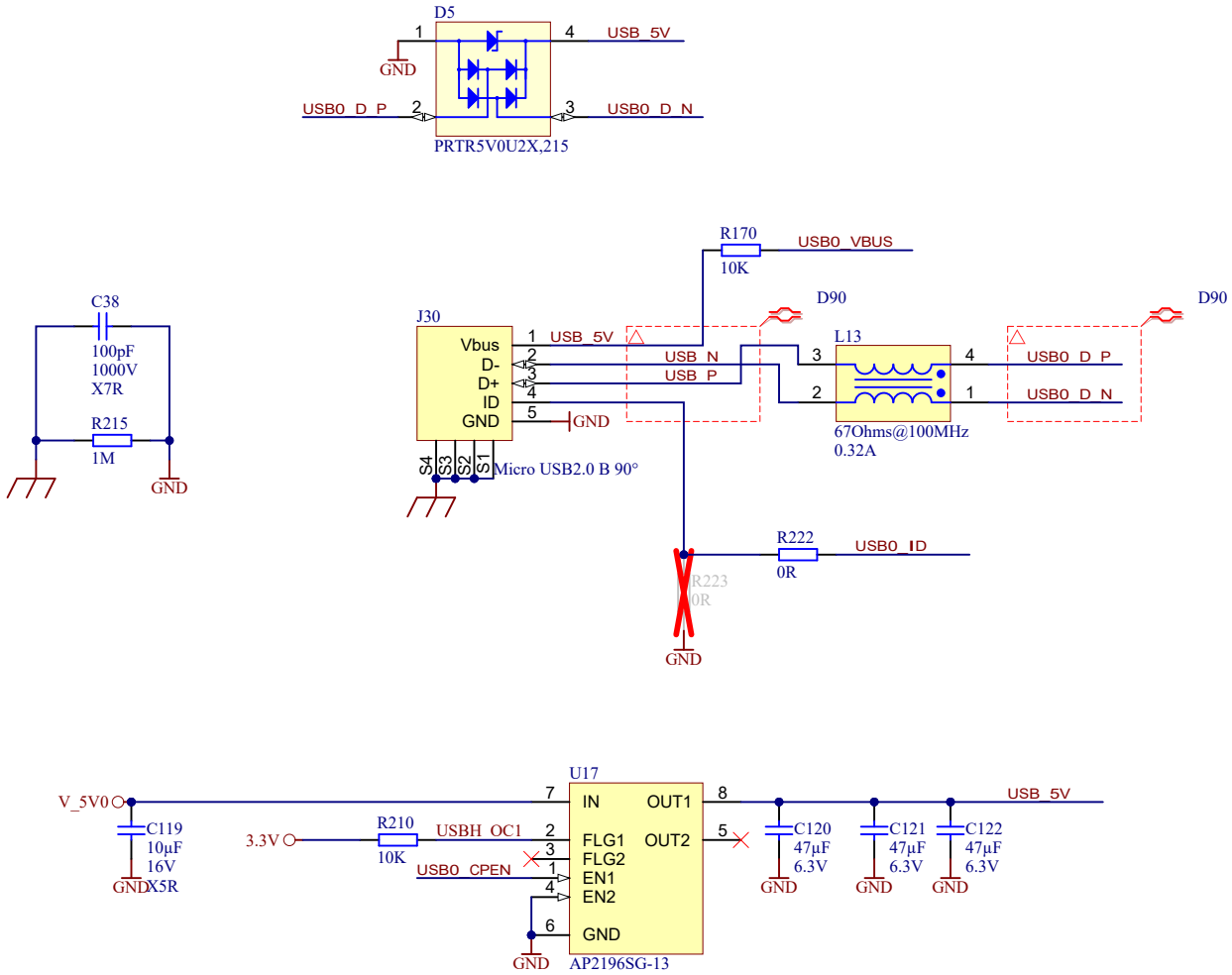

trenz electronic	Title: MicroUSB		
A4	Number: TEB0835 B		Rev. 03
Date: 2024-12-17	Copyright: Trenz Electronic GmbH		Page 23 of 28
Filename: MicroUSB.SchDoc			

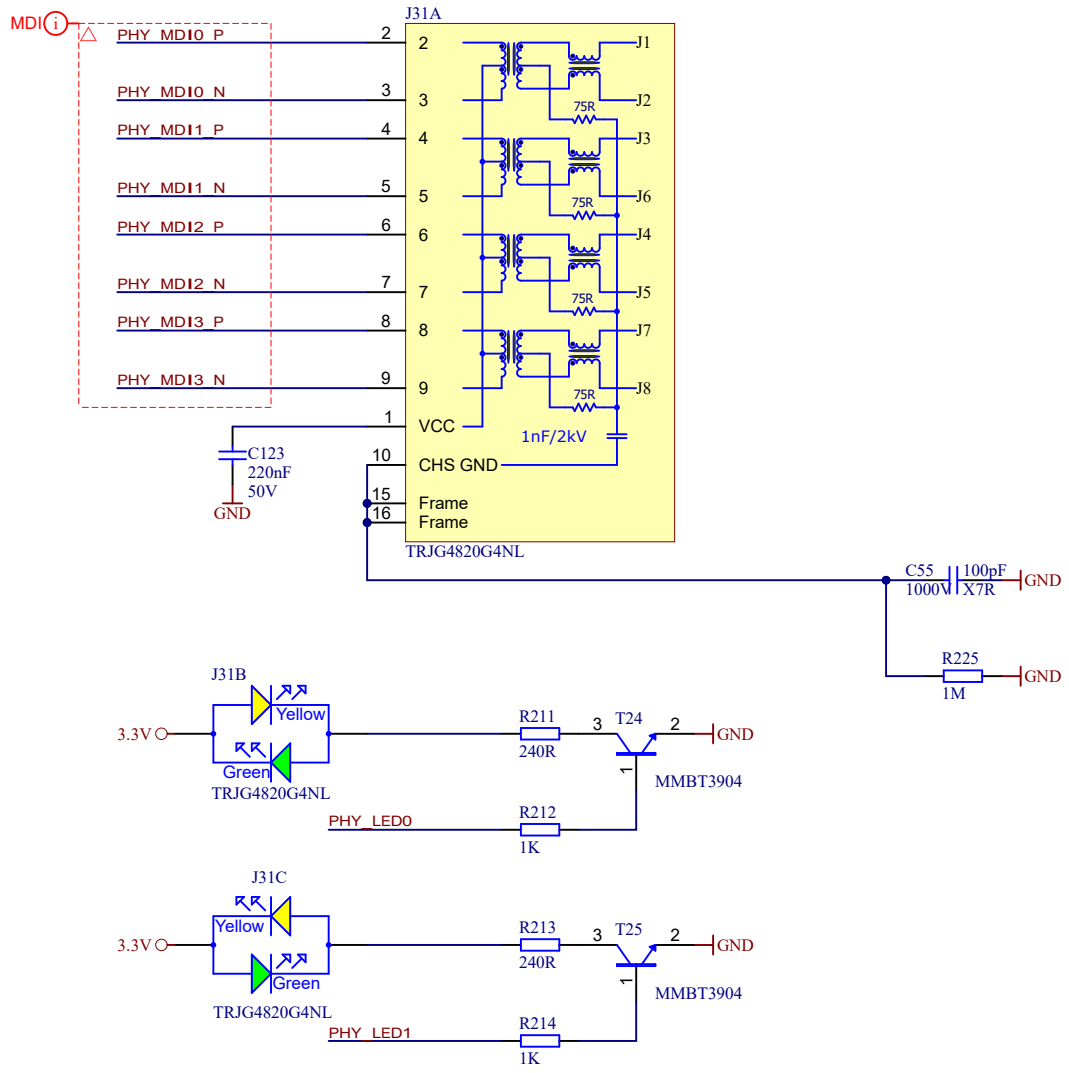

trenz electronic	Title: ETH-PHY		
A4	Number: TEB0835 B		Rev. 03
Date: 2024-12-17	Copyright: Trenz Electronic GmbH		Page 24 of 28
	Filename: ETH-PHY.SchDoc		

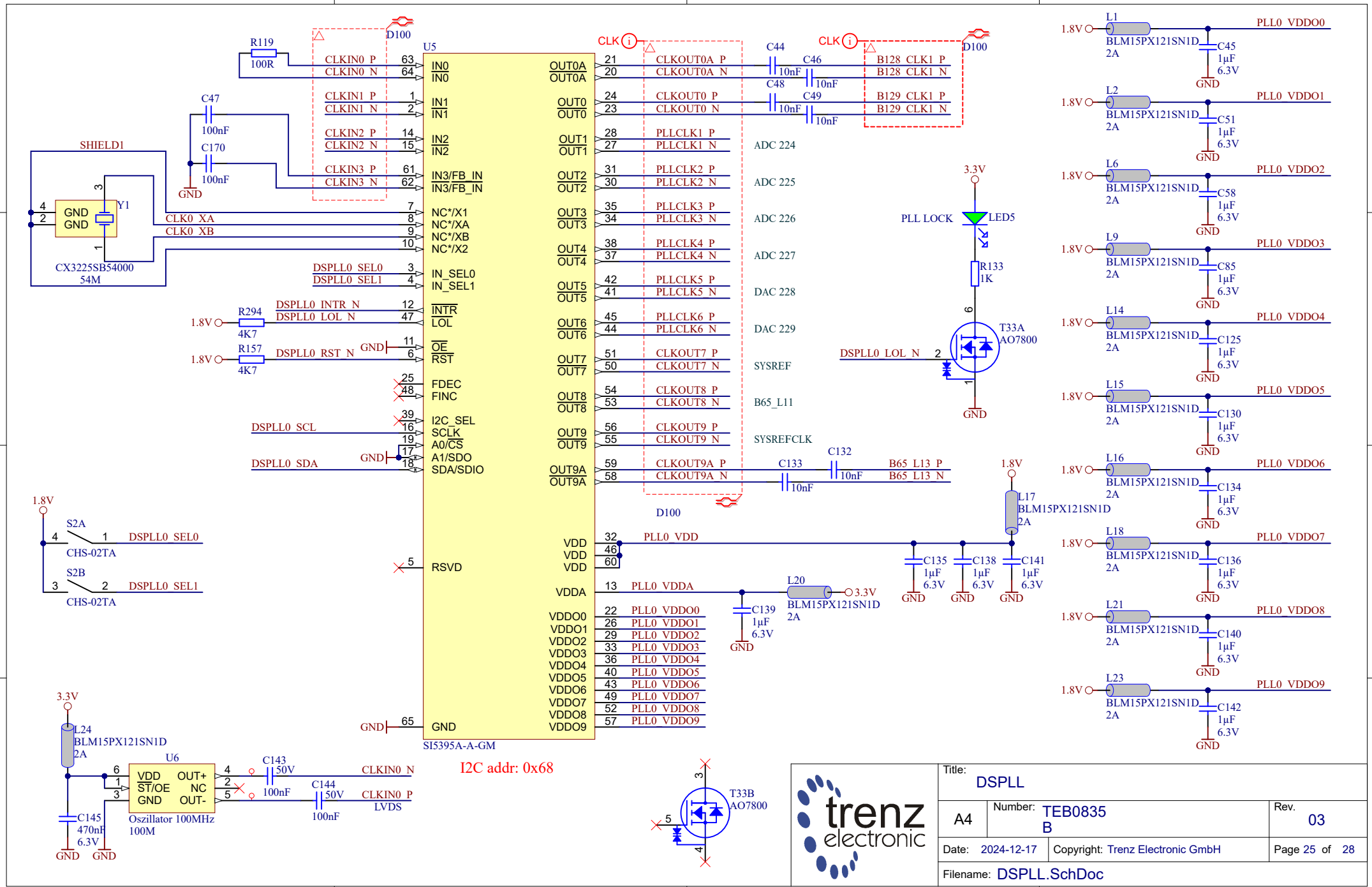

Title: DSPLL

A4 | Number: TEB0835 B | Rev. 03

Date: 2024-12-17 | Copyright: Trenz Electronic GmbH | Page 25 of 28

Filename: DSPLL.SchDoc

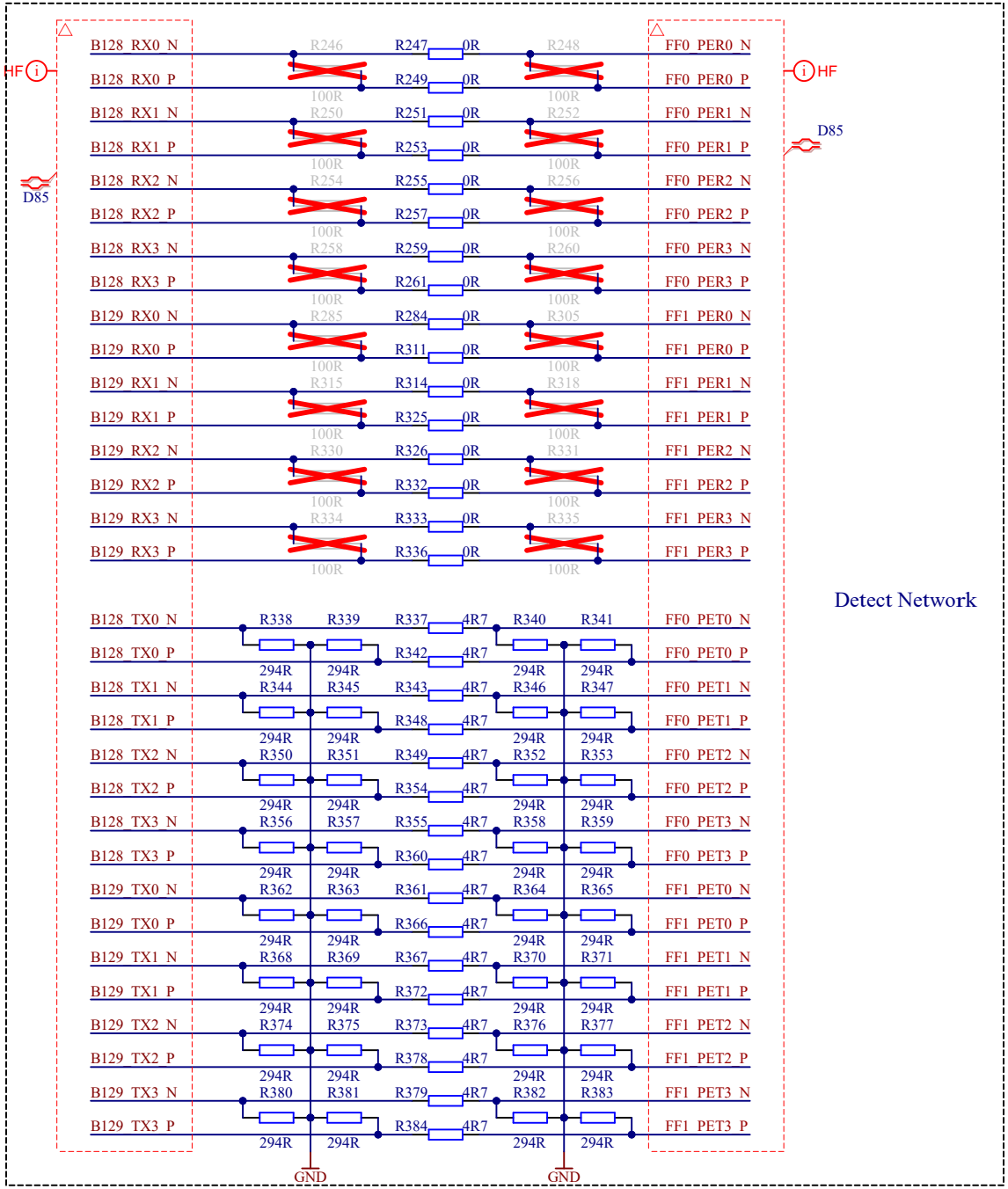

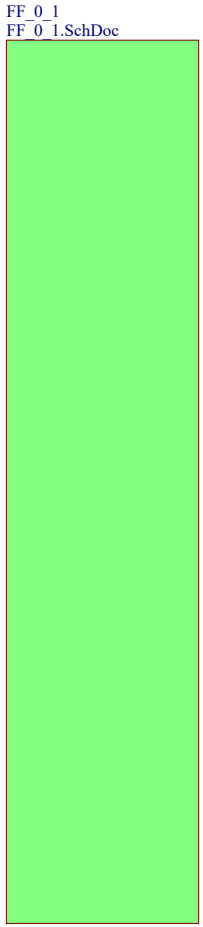

trenz electronic	Title: FireFly		
A4	Number: TEB0835 B		Rev. 03
Date: 2024-03-06	Copyright: Trenz Electronic GmbH		Page26 of 28
Filename: FireFly.SchDoc			

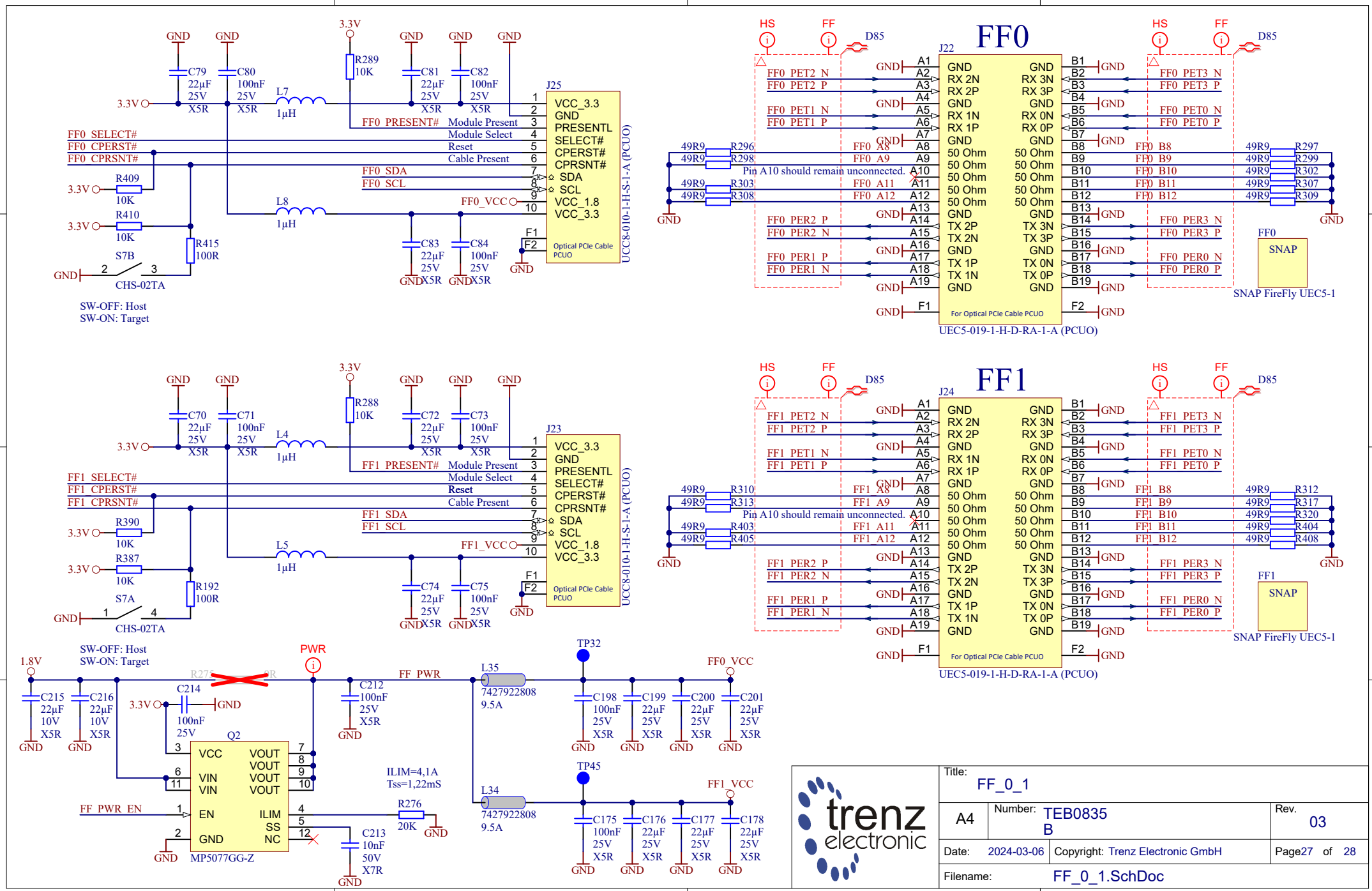
FF0
J25
UCC8-010-1-H-S-1-A (PCUO)
Optical PCIe Cable PCUO
FF0_PRESENT#
FF0_SELECT#
FF0_CPERST#
FF0_CPRSNT#
FF0_SDA
FF0_SCL
FF0_VCC
S7B
CHS-02TA
SW-OFF: Host
SW-ON: Target
J22
UEC5-019-1-H-D-RA-1-A (PCUO)
For Optical PCIe Cable PCUO
Pin A10 should remain unconnected.
SNAP FireFly UEC5-1
FF1
J23
FF1_PRESENT#
FF1_SELECT#
FF1_CPERST#
FF1_CPRSNT#
FF1_SDA
FF1_SCL
FF1_VCC
S7A
J24
PWR
FF_PWR
FF_PWR_EN
MP5077GG-Z
ILIM=4,1A
Tss=1,22mS
L35
L34
7427922808
9.5A
TP32
TP45
FF0_VCC
FF1_VCC
Title: FF_0_1
A4
Number: TEB0835 B
Rev. 03
Date: 2024-03-06
Copyright: Trenz Electronic GmbH
Page27 of 28
Filename: FF_0_1.SchDoc

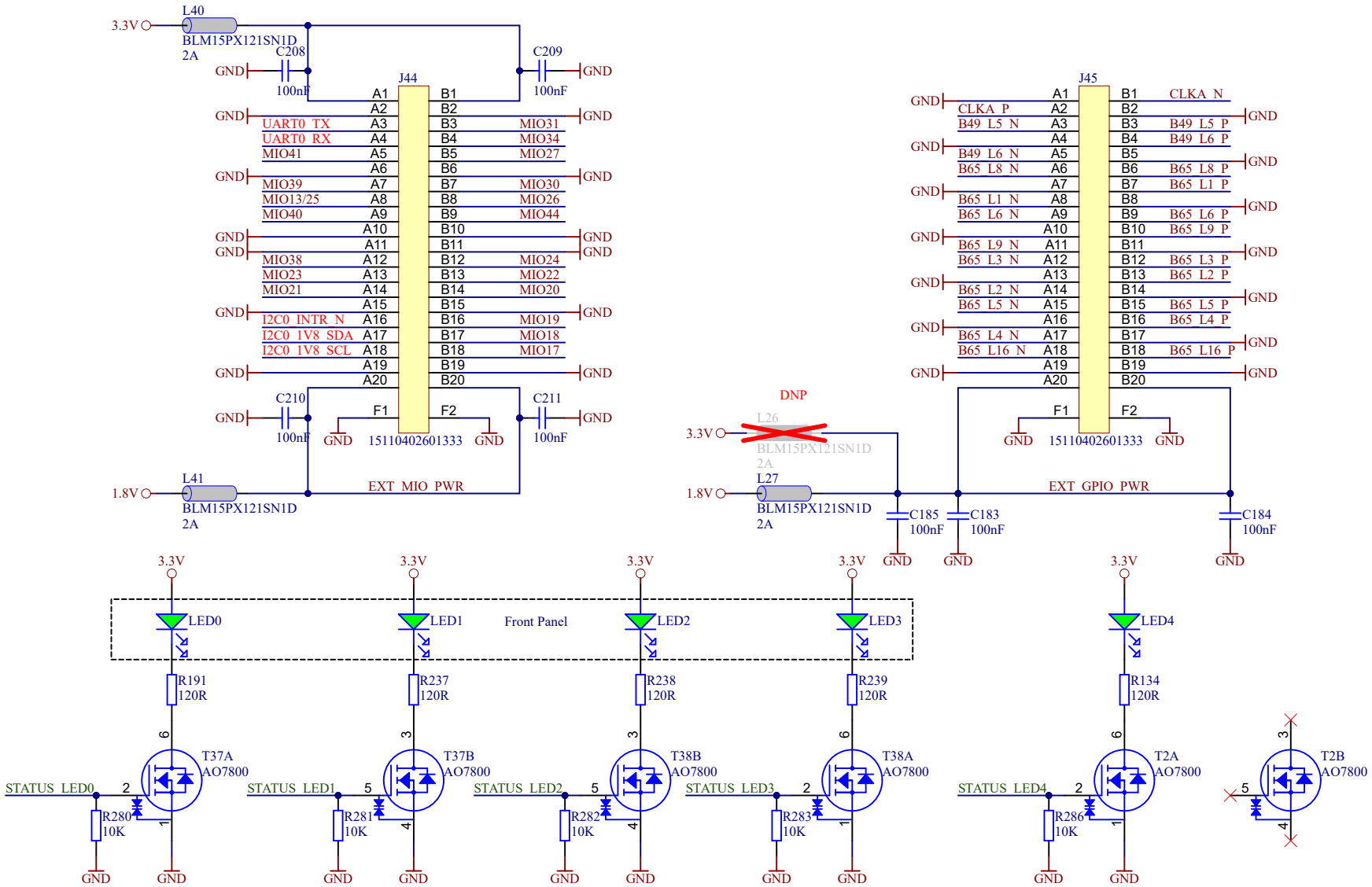

trenz electronic	Title: EXT_Connectors		
A4	Number: TEB0835 B		Rev. 03
Date: 2024-12-17	Copyright: Trenz Electronic GmbH		Page 28 of 28
	Filename: EXT_Connectors.SchDoc		