Carrier

Aero®
39MN,MW03-110
Indoor and Weathertight Outdoor Air Handlers

Installation, Start-Up and Service Instructions

CONTENTS

Page

INTRODUCTION 3
SAFETY CONSIDERATIONS 3
UNIT AND COMPONENT IDENTIFICATION 4
PRE-INSTALLATION 87
Inspection 87
Rigging and Handling 87
Long-Term Storage 87
Service Clearance 87
Drain Positioning 87
Unit Suspension 87
Internal Vibration Isolation 88
- REMOVING HOLDDOWN BOLTS, AIRFOIL, PLENUM AND FORWARD-CURVED FANS
- ADJUSTING ISOLATOR SPRINGS

External Vibration Isolation 88
Roof Curb 88
Pier or Beam Mount 89
INSTALLATION 90
Indoor and Outdoor Unit Shipping Split (All Sizes) . . 90
- NON-STACKED UNITS
- STACKED UNITS

Duct Connections 93
- MIXING BOX/INLET PLENUM/DISCHARGE PLENUM/EXTERNAL BYPASS/RETURN FAN
- MIXING BOX/INLET PLENUM/DISCHARGE PLENUM (BOTTOM)
- HOUSED FAN DISCHARGE CONNECTIONS (NOT PLENUM FANS)
- BOTTOM RETURN FAN CONNECTIONS
- PLENUM FAN DUCT CONNECTIONS
- DRAW-THRU PLENUM FAN DISCHARGE FABRICATION

Panel Cutting 100
Face and Bypass Dampers 100
Zone Damper Section 103
- ZONE DAMPER LINKAGE

Mixing Box/Filter Mixing Box Damper Linkage . . 104
- CONTROL DAMPERS
- DAMPER LINKAGE ADJUSTMENT
- LINKAGE ADJUSTMENT
- FIELD SUPPLIED AND INSTALLED ACTUATORS

Mixing Box Damper Actuators 107
Vertical Draw-Thru Units 107
Stacked Supply Fan, Return Fan and Exhaust Box Sections 107
Stacked Units Turning Plenum 107
Fan Sled Disassembly 109
Fan Sled Dimensions 109
Fan Motors and Drives 115
- JUNCTION BOX CONDENSATE PREVENTION

Motor Power Wiring 115
- SINGLE-POINT POWER WIRING (SPP) (OPTION)
- EC MOTOR FAN POWER BOX WIRING
- MOTOR OVERLOAD PROTECTION

Sheaves 115
- ALIGNMENT

V-Belts 116
- TENSION MEASUREMENT PROCEDURE

Direct Drive Fan Alignment 118
Fan Airflow Measurement Piezometer Ring 118
- CALCULATION WHEN USING THE PIEZOMETER

Outdoor Hoods and Louvers 118
Coil Connection Housing (Outdoor Unit — All Sizes) 119
Power Exhaust Hood Field Installation 123
Humidifier Installation 126
- ASSEMBLE CONTROL VALVE ASSEMBLY
- ASSEMBLE STRAINER AND TRAP ASSEMBLY AND VALVE ASSEMBLY

Assembly of Vertical Manifolds 129
Coil Installation 129
- INSTALLATION OF SINGLE HEIGHT COILS
- INSTALLATION OF STACKED COILS

Water and Steam Coil Piping Recommendations 132
- GENERAL
- WATER COILS
- STEAM COILS

Coil Freeze-Up Protection 135
- WATER COILS
- STEAM COILS
- INNER DISTRIBUTING TUBE STEAM COILS

Refrigerant Piping, Direct-Expansion Coils 135
- SUCTION PIPING

Distributor Nozzle Change-Out 136
Filter Drier 137
TXV (Thermostatic Expansion Valve) 137
- TXV LOCATION
- SOLDER TECHNIQUES
- TXV BULB LOCATION AND INSTALLATION
- EXTERNAL EQUALIZER CONNECTION
- OIL RETURN CONNECTION
- EXPANSION VALVE ADJUSTMENT

Hot Gas Bypass 139
- SPECIAL PIPING WITH 4 SPLITS PER COIL
- SPECIAL PIPING FOR DOUBLE-CIRCUIT COILS

Hot Gas Bypass Piping and Wiring 141

Manufacturer reserves the right to discontinue, or change at any time, specifications or designs without notice and without incurring obligations.

Condensate Drain 142
- DRAW-THRU
- BLOW-THRU

Fan Motor Wiring Recommendations 142
Motor Nameplate Data 145
Fan Motor Starter 146
- FIELD-WIRING
- SINGLE-POINT POWER (OPTION) WIRING
- START-UP AND TEST

Disconnect 146
- DISCONNECT WIRING
- START-UP AND TEST

VFD 146
- FIELD-WIRING
- START-UP AND TEST

VFD with Bypass 147
- WIRING
- START-UP AND TEST

Shunt Trip Installation, ACI Part No. 135046 155
Shunt Trip Installation, ACI Part No. 135728 or 135728A 156
ACH550 VFD Configuration 158
- START-UP WITH ASSISTANT
- START-UP BY CHANGING PARAMETERS INDIVIDUALLY

ACH 550 VFD Modes 158
- STANDARD DISPLAY MODE
- PARAMETERS MODE
- CHANGED PARAMETERS MODE
- DRIVE PARAMETER BACKUP MODE
- UPLOAD ALL PARAMETERS
- DOWNLOAD ALL PARAMETERS
- CLOCK SET MODE
- I/O SETTINGS MODE

ACH580 Control Panel 160
- REMOVING AND REINSTALLING THE CONTROL PANEL
- LAYOUT OF THE CONTROL PANEL DISPLAY
- HOME VIEW DISPLAYS
- IPC ADDITIONAL HOME VIEW DISPLAYS
- KEYS
- KEY SHORTCUTS
- CLOCK, REGION, DISPLAY
- OPTIONS MENU

ABB E-Clipse Bypass Operator Control 168
- ACH550 CONTROL PANEL WIRING
- BYPASS CONTROL KEYPAD AND CONTROL BOARD WIRING
- SMOKE CONTROL MODE
- PROGRAMMABLE RELAY CONTACT OUTPUTS
- BYPASS NOT FAULTED
- SYSTEM RUNNING
- SYSTEM STARTED
- BYPASS SELECTED
- BYPASS AUTO

Electric Heaters 170
- CONNECT POWER AND CONTROL WIRES

Gas Furnace Identification 196
Gas-Fired Duct Furnaces 196
- INSTALLATION REQUIREMENTS
- VERIFICATION
- CONDENSATE DRAINS
- FURNACE COMPONENT IDENTIFICATION
- OPERATING AND SAFETY CONTROLS
- COMBUSTION AIR SUPPLY
- VENTING
- GAS SUPPLY, PIPING, AND CONNECTIONS

Gas-Fired Rack System Furnaces 203
- INSTALLATION REQUIREMENTS
- CONTROL WIRING (RACK SYSTEM FURNACE)
- VERIFICATION
- CONDENSATE DRAINS
- FURNACE COMPONENT IDENTIFICATION
- OPERATING AND SAFETY CONTROLS
- COMBUSTION AIR SUPPLY
- UNIT LOCATION AND CLEARANCES
- GAS SUPPLY, PIPING, AND CONNECTIONS
- VENTING

Energy Recovery Ventilation (ERV) Sections . . . 207
- RECEIVING AND INSPECTION
- RIGGING AND STACKING
- CAULK/SEALANT APPLICATION
- ERV WHEEL MOTOR WIRING

Marine Lights and Convenience Outlets 213
START-UP 215
Checklist 215
- SINGLE POINT POWER OPTION
- FILTERS
- AIRFOIL AND FORWARD-CURVED FANS
- DIRECT DRIVE PLENUM FANS WITH NEMA MOTORS
- TWO, FOUR, OR SIX-FAN ARRAY DIRECT DRIVE PLENUM FANS WITH NEMA MOTORS

Direct Drive Plenum Fans with EC Motors 217
- START-UP
- 0-10 VDC OR 4-20 MA FAN MOTOR CONTROL
- MODBUS OR BACNET FAN MOTOR CONTROL
- HUMIDIFIER INSTALLATION CHECKLIST
- HUMIDIFIER START-UP
- COILS
- INTEGRAL FACE AND BYPASS COIL START-UP
- ELECTRIC HEATERS
- GAS-FIRED FURNACES (DUCT AND RACK SYSTEM)

Energy Recovery Wheel 220
- ZEROING THE MINIHELIC GAUGE BEFORE START UP

SERVICE 221
General 221
Single Point Power Enclosure 221
Electric Heaters 221
Gas-Fired Furnaces (Duct and Rack System) . . . 221
- INSPECTION
- OPERATION CHECK

Fans 221
- DIRECT DRIVE FANS WITH EC MOTORS
- FAN MOTOR REPLACEMENT ON BELT DRIVE FAN ASSEMBLIES

Energy Recovery Ventilation 222
- FAN SHAFT BEARING REMOVAL
- CLEANING
- CASSETTE REPLACEMENT
- ADJUSTING AIR SEALS
- SEGMENT INSTALLATION AND REPLACEMENT
- WHEEL DRIVE MOTOR AND PULLEY REPLACEMENT
- SOLID BELT REPLACEMENT
- LINK BELT REPLACEMENT
- OTHER MAINTENANCE

Cleaning Unit Interior/Exterior 227
Coil Cleaning 227
Winter Shutdown 227
- ANTIFREEZE METHODS OF COIL PROTECTION

• AIR-DRYING METHOD OF COIL PROTECTION
Coil Removal 228
• REMOVAL OF SINGLE HEIGHT COILS (SIZES 03-36)
• REMOVAL OF STACKED COILS (SIZES 40 TO 110)
Changing Coil Hand 229
• NUFIN COILS
• DIRECT EXPANSION COILS
• CHILLED WATER AND HOT WATER COILS
• STEAM INNER DISTRIBUTING TUBE COILS
• PIPING
Minihelic Gauge 231
• CALIBRATION CHECK
• MAINTENANCE
Filters 231
• BAG-CARTRIDGE FILTERS
• IN-TRACK BAFFLES
• FLAT FILTERS
• ANGLE FILTERS
• HEPA FILTERS
Fan Shaft Bearing Removal 236
Fan and Shaft Removal 272
Motor Location 273
• INTERNALLY ISOLATED UNIT
Lubrication 273
• MOTORS
• BEARINGS
Motor and Drive Package Data 273
Variable Frequency Drive 273
• HEAT SINK
• MAIN FAN REPLACEMENT
• CONTROL PANEL CLEANING
• BATTERY REPLACEMENT
TROUBLESHOOTING 274
Steam Coil Performance Problems 274
Steam Failure Modes 275
VFD Diagnostics 275
• FAULTS (RED LED LIT)
• ALARMS (GREEN LED FLASHING)
• CORRECTING FAULTS
• HISTORY
• CORRECTING ALARMS
START-UP CHECKLIST — 39MN AHU UNITS. CL-1
START-UP CHECKLIST — 39MW AHU UNITS CL-3
START-UP CHECKLIST — 39M GAS-FIRED DUCT FURNACE CL-5
START-UP CHECKLIST — 39M GAS-FIRED FURNACE RACK ASSEMBLY . CL-6

INTRODUCTION

The 39M air-handling equipment is designed to provide safe and reliable service when installed and operated within design specifications. Insure proper PPE (personal protective equipment) is being used prior to performing any service or maintenance to this equipment. Additionally to avoid injury to personnel and damage to equipment or property when operating this equipment, use good judgement and follow safe practices as outlined below.

SAFETY CONSIDERATIONS

The 39M air-handling equipment is designed to provide safe and reliable service when installed and operated within design specifications. To avoid injury to personnel and damage to equipment or property when operating this equipment, use good judgment and follow safe practices as outlined below.

⚠ DANGER

NEVER enter an enclosed fan cabinet or reach into a unit while the fan is running.

Failure to heed this warning will result in severe personal injury or death.

⚠ WARNING

LOCK OPEN AND TAG the fan motor power disconnect switch before working on a fan. Take fuses with you and note removal on tag.

LOCK OPEN AND TAG the electric heat coil power disconnect switch before working on or near heaters.

Failure to follow these safety precautions could lead to severe personal injury or death.

⚠ WARNING

CHECK for adequate ventilation when welding, cutting, or performing any other fume producing activities inside air-handling unit cabinet or plenum so that fumes will not migrate through ductwork to occupied spaces.

WHEN STEAM CLEANING COILS be sure that the area is clear of personnel.

SECURE fan drive sheave with a rope or strap before working on a fan to ensure that rotor cannot freewheel.

PREVENT unauthorized entry into the unit; leave safety latches in place on access doors except during installation or service procedures. After accessing a section, replace and tighten the safety latch.

DO NOT work on dampers until their operators are disconnected.

BE SURE that fans are properly grounded before working on them.

Failure to follow these safety precautions could lead to personal injury.

⚠ WARNING

CHECK the assembly and component weights to be sure that the rigging equipment can handle them safely. Note also the centers of gravity and any specific rigging instructions.

PROTECT adjacent flammable material when welding or flame cutting. Have a fire extinguisher at hand and ready for immediate use.

Failure to follow these safety precautions could lead to severe personal injury and/or equipment damage.

⚠ WARNING

DO NOT remove access panel fasteners until fan is completely stopped.

Pressure developed by a moving fan can cause excessive force against the panel and toward personnel.

Failure to heed this warning could lead to personal injury and/or equipment damage.

⚠ CAUTION

DO NOT ground equipment to fan assembly when welding. Damage to fan bearings could result.

DO NOT restore power to unit until all temporary walkways inside components have been removed.

NEVER pressurize equipment in excess of specified test pressures.

Failure to follow these safety precautions could lead to equipment damage.

⚠ WARNING

DO NOT USE TORCH to remove any component. System contains oil and refrigerant under pressure.

To remove a component, wear protective gloves and goggles and proceed as follows:

a. Shut off electrical power to unit.
b. Recover refrigerant to relieve all pressure from system using both high-pressure and low pressure ports.
c. Traces of vapor should be displaced with nitrogen and the work area should be well ventilated. Refrigerant in contact with an open flame produces toxic gases.
d. Cut component connection tubing with tubing cutter and remove component from unit. Use a pan to catch any oil that may come out of the lines and as a gauge for how much oil to add to the system.
e. Carefully unsweat remaining tubing stubs when necessary. Oil can ignite when exposed to torch flame.

Failure to follow these procedures may result in personal injury or death.

⚠ WARNING

Improper installation, adjustment, alteration, service, or maintenance can cause property damage, personal injury, or loss of life. Refer to the User's Information Manual provided with this unit for more details.

Do not store or use gasoline or other flammable vapors and liquids in the vicinity of this or any other appliance.

What to do if you smell gas:

1. DO NOT try to light any appliance.
2. DO NOT touch any electrical switch, or use any phone in your building.
3. IMMEDIATELY call your gas supplier from a neighbor's phone. Follow the gas supplier's instructions.

If you cannot reach your gas supplier, call the fire department.

IMPORTANT: The installation of air-handling units and all associated components, parts, and accessories which make up the installation and subsequent maintenance shall be in accordance with the regulations of ALL authorities having jurisdiction and MUST conform to all applicable codes. It is the responsibility of all installing contractor to determine and comply with ALL applicable codes and regulations. Field-supplied motors should be Underwriters Laboratories (UL) or Canadian Standards Association (CSA) approved. Field wiring must comply with National Electrical Code (NEC) and all local requirements.

UNIT AND COMPONENT IDENTIFICATION

The 39M air handler comes in two basic configurations; horizontal and vertical. Using appropriate sections, it is possible to design many unit variations, including blow-thru units and plenum fan units with multiple discharges. See Fig. 1 and 2 for nameplate label identification. Figures 3-11 show an example of the model number used for 39M unit sections and components. Each unit's model number is listed on a label affixed to the fan section. Section and major component level part numbers are listed and affixed to each individual component section.

For further information on unit and component identification contact your Carrier representative for the ***AHU*Builder**® program. Refer to the 39M Product Data catalog for more information on individual component sections. Refer to Fig. 12-15 and Tables 1-23 for component data.

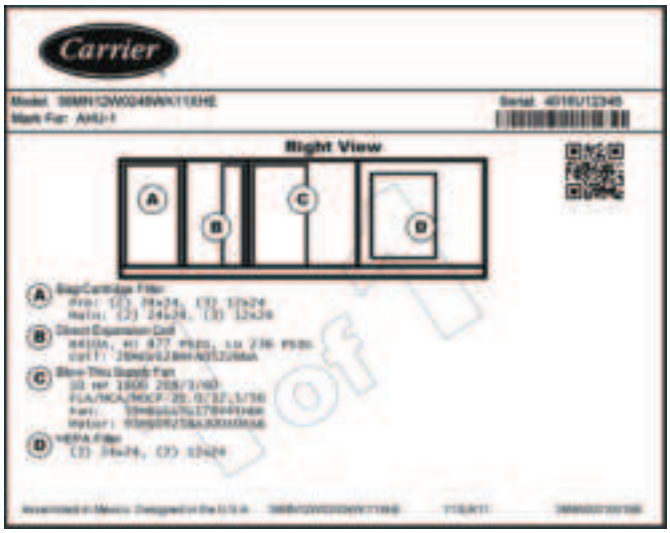

NOTE: Unit nameplate label is found on each component section shipped separately.

Fig. 1 — 39MN Unit Nameplate Label

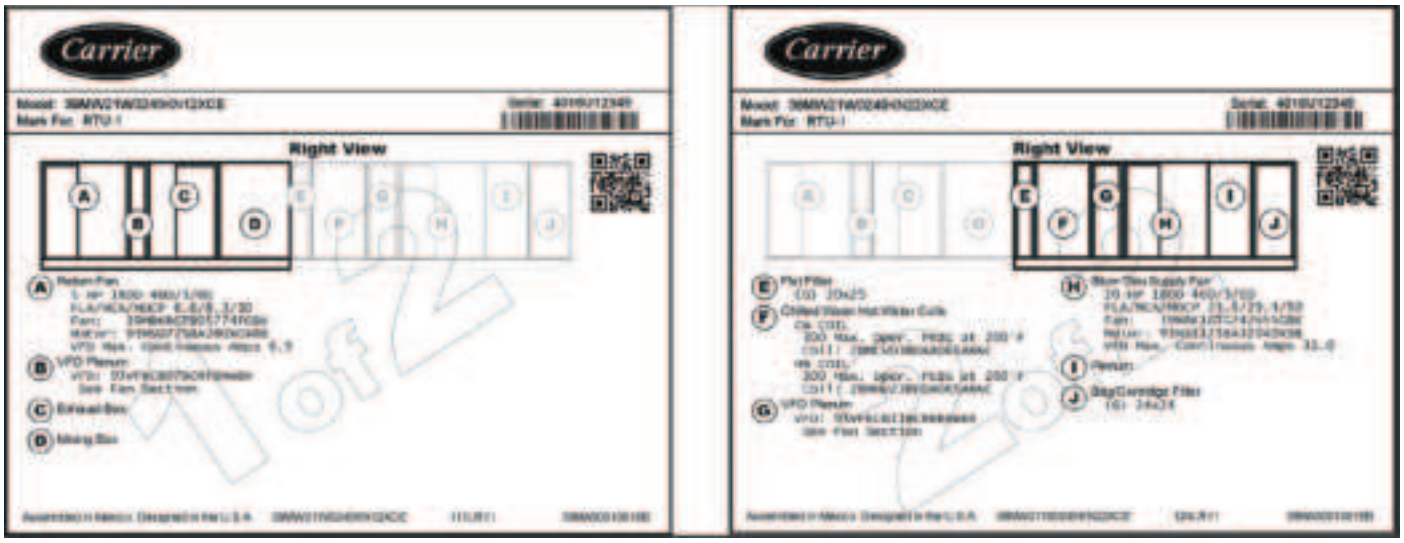

NOTE: Each component section has a section nameplate label.

Fig. 2 — 39MW Unit Nameplate Label

39M N 03 W 000001 12 X P E

39M – Aero®
Air Handler

Code Model
N – Indoor Unit
W – Outdoor Unit

Unit Size

03	30
06	35
07	36
08	37
09	40
10	42
11	50
12	51
14	58
16	61
17	72
18	85
21	96
22	110 (B0)*
25	

Revision Level

Finish and Thermal Option†

Order Type
S – Special Order
X – Standard Order

Shipping No. of Pieces
Example: 12 = 1 of 2
22 = 2 of 2

000001 thru 999999 – Standard Unit

Code Aspect Ratio
T – Tall
W – Wide

* B0 should be used to select unit size 110.

† See Finish and Thermal Option table.

FINISH AND THERMAL OPTION (POSITION 17)

CODE	EXTERNAL FINISH	INTERNAL FINISH	THERMAL BREAK
B	Pre-Paint	AgION®[a]	Level 1
C	Pre-Paint	Galvanized	Level 2
D	Pre-Paint	Galvanized	Level 1
F	Galvanized	Galvanized	Level 2
G	Galvanized	Galvanized	Level 1
H	Galvanized	AgION	Level 2
K	Galvanized	AgION	Level 1
L	Galvanized	Stainless Steel	Level 2
M	Galvanized	Stainless Steel	Level 1
P	Pre-Paint	AgION	Level 2
R	Pre-Paint	Stainless Steel	Level 2
S	Pre-Paint	Stainless Steel	Level 1
X	Special Order		

NOTE(S):
a. Third-party trademarks and logos are the property of their respective owners.

Fig. 3 — 39M Unit Nomenclature

28MC V 6 20 F D A 020 A R N –

28MC – 1/2 in. Chilled Water
28MH – 1/2 in. Hot Water

Coil Position
H – Horizontal
V – Vertical

Rows
1 – 1 Row
2 – 2 Row
4 – 4 Row
6 – 6 Row
8 – 8 Row
0 – 10 Row

Tubes In Face 12 – 44*
39M Unit

Size	L	M	B	S
03W	20	14	12	N/A
06W	20	14	12	12
07T	30	24	20	12
08W	22	16	14	12
09T	36	28	24	20
10W	22	16	14	12
11T	42	34	28	22
12T	42	34	28	22
12W	28	22	20	14
14W	28	24	20	14
16T	22/24	36	30	24
17W	30	24	22	16
18T	24/26	42	32	26
21W	38	32	28	18
22T	26/28	44	34	26
25T	28/30	44	38	26
25W	38	32	28	18
30T	28/30	44	38	26
30W	38	32	28	18
35T	30/30	24/24	40	34
36W	44	36	30	24
37T	36/36	30/30	24/24	38
40W	24/24	44	36	24
42T	36/36	28/30	22/24	40
50W	28/28	44	36	28
51T	36/36	28/30	22/24	30
58T	40/42	32/34	26/28	42
61W	34/34	28/28	44	34
72W	38/40	32/32	24/26	N/A
85W	38/40	32/32	24/26	N/A
96W	44/44	36/36	28/28	N/A
110W	44/44	36/36	28/28	N/A

Circuiting
H – Half Circuit
F – Full Circuit
D – Double Circuit

LEGEND
B — Bypass
L — Large
M — Medium
S — Small

*Multiple values indicate that two coils must be ordered.
†Distance between tube sheets.

Revision Level

Coating
N – Non-Coated
E – E-Coated

Hand
R – Right
L – Left

Header Style
A – MPT Std
B – MPT Non-Ferrous
NOTE: If positions 7-8 are ≥ 30, then position 15 cannot = B.

39M Unit Size DBTS† (in.)

03W	— 20	25W	— 74
06W	— 34	30T	— 59
07T	— 26	30W	— 92
08W	— 40	35T	— 67
09T	— 29	36W	— 96
10W	— 52	37T	— 59
11T	— 32	40W	— 96
12T	— 35	42T	— 67
12W	— 52	50W	— 104
14W	— 59	51T	— 81
16T	— 38	58T	— 81
17W	— 65	61W	— 104
18T	— 41	72W	— 107
21W	— 65	85W	— 126
22T	— 47	96W	— 126
25T	— 49	110W	— 144

Tube Wall and Hairpin Type
1/2 in. O.D. Copper Tube
A = .016 Std. Hairpin/0.0042 AL or CU Fin
B = .025 Std. Hairpin/0.0042 AL or CU Fin
E = .016 Std. Hairpin/0.0060 AL Fin
F = .025 Std. Hairpin/0.0060 AL Fin

No.	Fin Material	Fins Per Inch	Casting Material
U –	AL	7	Galv. - Pos. 11 = E or F
A –	AL	8	Galv. - Pos. 11 = E or F
E –	AL	9	Galv. - Pos. 11 = E or F
V –	AL	10	Galv.
D –	AL	11	Galv.
C –	AL	12	Galv.
W –	AL	13	Galv.
F –	AL	14	Galv.
X –	AL	7	St. Stl. - Pos. 11 = E or F
G –	AL	8	St. Stl. - Pos. 11 = E or F
L –	AL	9	St. Stl. - Pos. 11 = E or F
Y –	AL	10	St. Stl.
K –	AL	11	St. Stl.
J –	AL	12	St. Stl.
Z –	AL	13	St. Stl.
M –	AL	14	St. Stl.
S –	CU	9	St. Stl.
2 –	CU	10	St. Stl.
R –	CU	11	St. Stl.
Q –	CU	12	St. Stl.
3 –	CU	13	St. Stl..
T –	CU	14	St. Stl.

Fig. 4 — 28MC, 28MH (1/2-in. Water Coil) Nomenclature

28MZ H 1 26 F B T 074 A X N –

28MZ – IDT Steam

Coil Position
H – Horizontal
V – Vertical

Rows
1 – 1 Row
2 – 2 Row

Tubes In Face*

39M Unit Size	If position 11 = S 1 in. L	M	B	S	If position 11 = T 5/8 in. L	M	B	S
03W	8	5	5	N/A	16	10	10	N/A
06W	8	6	5	5	16	12	10	10
07T	13	11	8	7	26	22	16	14
08W	9	6	5	5	18	12	11	10
09T	14	12	10	8	28	24	20	16
10W	9	6	5	5	18	12	11	10
11T	16	14	10	9	32	28	20	18
12T	17	14	11	9	34	28	22	18
12W	11	9	8	5	22	18	16	10
14W	11	10	8	5	22	20	16	10
16T	20	16	13	10	40	32	26	20
17W	12	10	9	6	24	20	19	12
18T	21	17	13	11	42	34	26	22
21W	15	13	11	7	30	26	22	14
22T	22	18	14	12	44	36	28	24
25T	12/12	20	16	13	24/24	40	32	26
25W	15	13	11	7	30	26	22	14
30T	12/12	20	16	13	N/A	N/A	N/A	N/A
30W	15	13	11	7	N/A	N/A	N/A	N/A
35T	12/13	21	17	14	N/A	N/A	N/A	N/A
36W	18	15	12	10	N/A	N/A	N/A	N/A
37T	15/15	13/13	20	16	N/A	N/A	N/A	N/A
40W	10/10	18	15	10	N/A	N/A	N/A	N/A
42T	15/15	13/13	10/10	16	N/A	N/A	N/A	N/A
50W	11/12	18	15	11	N/A	N/A	N/A	N/A
51T	15/15	13/13	10/10	15	N/A	N/A	N/A	N/A
58T	17/17	14/15	11/11	18	N/A	N/A	N/A	N/A
61W	14/14	11/12	18	14	N/A	N/A	N/A	N/A
72W	16/16	13/13	10/11	N/A	N/A	N/A	N/A	N/A
85W	16/16	13/13	10/11	N/A	N/A	N/A	N/A	N/A
96W	18/18	14/15	12/12	N/A	N/A	N/A	N/A	N/A
110W	18/18	14/15	12/12	N/A	N/A	N/A	N/A	N/A

Circuiting
F – Full

Fin Material
Fins Per Inch
Casing Material
B – AL 6 GALV.
E – AL 9 GALV.
C – AL 12 GALV.
H – AL 6 ST. STL.
L – AL 9 ST. STL.
J – AL 12 ST. STL.
P – CU 6 ST. STL.
S – CU 9 ST. STL.
Q – CU 12 ST. STL.

– – Coil Revision

Coating
N – Non-Coated
E – E-Coated

X – Always

Header Style
A – MPT Std

Header Note:
Pos. 11 (Type S)
Supply = 2 1/2 in. MPT
Condensate = 2 1/2 in. MPT
Pos. 11 (Type T)
(1) Row 10-28TF = 2 in. MPT (Supply and Return)
29-40 = 2 1/2 in. MPT (Supply)
2 in. MPT (Return)
(2) Row 10-28TF = 2 1/2 in. MPT (Supply and Return)
29-40TF = 3 in. MPT (Supply)
= 2 1/2 in. MPT (Return)
TF-Tubes in face

39M Unit Size	DBTS† (in.)
03W	20
06W	34
07T	26
08W	40
09T	29
10W	52
11T	32
12T	35
12W	52
14W	59
16T	38
17W	65
18T	41
21W	65
22T	47
25T	49
25W	74
30T	59
30W	92
35T	67
36W	96
37T	59
40W	96
42T	67
50W	104
51T	81
58T	81
61W	104
72W	107
85W	126
96W	126
110W	144

Tube Size and Copper Wall
S – 1 in. O.D. x .030 Wall Outer Tube
5/8 in. O.D. x .020 Wall Inner Tube
T – 5/8 in. O.D. x .035 Wall Outer Tube
3/8 in. O.D. x .020 Wall Inner Tube

LEGEND
B — Bypass
L — Large
M — Medium
S — Small

*Multiple values indicated that two coils must be ordered.
†Distance between tube sheets.

Fig. 5 — 28MZ (Steam Coil) Nomenclature

28ME V 4 32 B A A 065 Z R N –

28ME – Direct Expansion (non-coated)
28M3 – Direct Expansion (E-coated)

Coil Position
V – Vertical

Rows
4 – 4 Row
6 – 6 Row
8 – 8 Row

Tubes In Face 14 - 44*

39M Unit

Size	L	M
03W	20	14
06W	20	14
07T	34	24
08W	22	16
09T	36	28
10W	22	16
11T	42	32
12T	42	32
12W	28	22
14W	28	24
16T	22/24	36
17W	30	24
18T	24/26	42
21W	38	32
22T	26/28	44
25T	28/30	44
25W	38	32
30T	28/30	44
30W	38	32
35T	30/30	24/24
36W	44	36
37T	36/36	30/30
40W	24/24	44
42T	36/36	30/30
50W	28/28	44
51T	36/36	30/30
58T	40/42	34/34
61W	34/34	28/28
72W	38/40	32/32
85W	38/40	32/32
96W	44/44	36/36
110W	44/44	36/36

Circuiting
A – Face Split Quarter
B – Face Split Half
C – Face Split Full
D – Double
E – Quarter Circuit – Single Distributor
J – Half Circuit – Single Distributor
G – Row Split Full
K – Row Split Quarter
M – Row Split Half

LEGEND
L — Large
M — Medium

Revision Level

Coating
N – Non-Coated
E – E-Coated

Hand
R – Right
L – Left

Header Style
Z – Varies with coil - no factory installed TXV
1 – Factory installed TXV on 1st coil
2 – Factory installed TXV on 2nd coil
3 – Factory installed TXV on 3rd coil
4 – Factory installed TXV on 4th coil
5 – Factory installed TXV on 5th coil
6 – Factory installed TXV on 6th coil
7 – Factory installed TXV on 7th coil
8 – Factory installed TXV on 8th coil
9 – Factory installed TXV on 9th coil

39M Unit Size	DBTS†(in.)	39M Unit Size	DBTS†(in.)
03W	20	**25W**	72
06W	34	**30T**	59
07T	26	**30W**	92
08W	40	**35T**	67
09T	29	**36W**	96
10W	52	**37T**	59
11T	32	**40W**	96
12T	35	**42T**	67
12W	52	**50W**	104
14W	59	**51T**	81
16T	38	**58T**	81
17W	65	**61W**	104
18T	41	**72W**	107
21W	65	**85W**	126
22T	47	**96W**	126
25T	49	**110W**	144

Tube Wall and Hairpin Type
1/2 in. O.D. Copper Tube
A – .016 Std. Hairpin/0.0042 AL or CU Fin
B – .025 Std. Hairpin/0.0042 AL or CU Fin
E – .016 Std. Hairpin/0.0060 AL Fin
F – .025 Std. Hairpin/0.0060 AL Fin

No.	Fin Material	Fins Per Inch	Casting Material
U –	AL	7	Galv. - POS 11 = E or F
A –	AL	8	Galv. - POS 11 = E or F
E –	AL	9	Galv. - POS 11 = E or F
V –	AL	10	Galv.
D –	AL	11	Galv.
C –	AL	12	Galv.
W –	AL	13	Galv.
F –	AL	14	Galv.
X –	AL	7	St. Stl. - POS 11 = E or F
G –	AL	8	St. Stl. - POS 11 = E or F
L –	AL	9	St. Stl. - POS 11 = E or F
Y –	AL	10	St. Stl.
K –	AL	11	St. Stl.
J –	AL	12	St. Stl.
Z –	AL	13	St. Stl.
M –	AL	14	St. Stl.
S –	CU	9	St. Stl.
2 –	CU	10	St. Stl.
R –	CU	11	St. Stl.
Q –	CU	12	St. Stl.
3 –	CU	13	St. Stl.
T –	CU	14	St. Stl.

*Multiple values indicated that two coils must be ordered. The first number is for the top coil.
†Distance between tube sheets.

Fig. 6 — 28ME (Direct Expansion Coil) Nomenclature

28MG M H S 2 2 04 G N R A H X –

28MG – Integral Face and Bypass

39M Unit Size
Code Size

B – 03W	**N** – 36W
C – 06W	**P** – 40W
D – 08W	**Q** – 50W
F – 10W	**R** – 61W
G – 12W	**S** – 72W
H – 14W	**T** – 85W
J – 17W	**V** – 96W
K – 21W	**W** – 110W
L – 25W	**X** – 07T/09T/11T/12T/16T/18T/22T/25T/30T/35T/37T/42T/51T/58T/
M – 30W	

Coil Position
H – Horizontal

Coil Type
H – Hot water
S – Steam

Coil Circuiting
1 – 1/4 Circuit
2 – 1/2 Circuit
3 – 3/4 Circuit
4 – Full Circuit
6 – 1 1/2 Circuit
7 – 1/3 Circuit

Rows
1 – 1 row
2 – 2 row
3 – 3 row

Casing Length

Unit Code		Unit Size	Casing Length (in.)
B	—	07T	26.0
C	—	16T	24.4
		18T	26.4
F	—	09T	29.0
G	—	11T	32.0
J	—	12T	35.0
K	—	22T	37.4
		25T	37.4
N	—	30T	48.4
		37T	48.4
Q	—	35T	59.4
		42T	59.4
R	—	51T	70.4
		58T	70.4
X	—	03W	26.0
		06W	33.0
		08W	39.0
		10W	48.0
		12W	48.0
		14W	54.0
		17W	59.4
		21W	59.4
		25W	59.4
		30W	81.4
		36W	81.4
		40W	81.4
		50W	92.4
		61W	92.4
		72W	92.4
		85W	114.4
		96W	114.1
		110W	136.4

Tube Orientation
H – Horizontal
V – Vertical

Fin Material
A – Aluminum
C – Copper

Hand
R – Right
L – Left

Actuator
Y – Yes
N – No

Casing Material
G – Galvanized
S – Stainless Steel

Fins per Inch

04 – 4	**10** – 10
05 – 5	**11** – 11
06 – 6	**12** – 12
07 – 7	**13** – 13
08 – 8	**14** – 14
09 – 9	

Fig. 7 — 28MG (Integral Face and Bypass Coil) Nomenclature

28MD V 4 30 F A C 092 E R N A

28MD – 5/8" Chilled Water (non-coated)
28MJ – 5/8" Hot Water (non-coated)
28M4 – 5/8" Chilled Water (E-coated)
28M5 – 5/8" Hot Water (E-coated)

Coil Position
H – Horizontal
V – Vertical

Rows
1 – 1 Row
2 – 2 Row
4 – 4 Row
6 – 6 Row
8 – 8 Row

Tubes in Face
39M Size
03-61 10-36

39M Size	L	M	B	S
03W	16	10	10	N/A
06W	16	10	10	10
07T	26	22	16	14
08W	18	12	10	10
09T	28	24	18	14
10W	15	12	10	10
11T	32	28	20	16
12T	34	28	22	18
12W	22	18	16	10
14W	22	20	16	10
16T	40	32	26	20
17W	24	20	18	12
18T	42	34	26	22
21W	30	26	22	14
22T	44	36	28	24
25T	50	40	32	26
25W	30	26	22	14
30T	50	40	32	26
30W	30	26	22	14
35T	52	42	34	26
36W	36	30	24	20
37T	30/30	26/26	40	34
40W	20/20	36	30	20
42T	30/30	26/26	20/20	32
50W	22/24	36	30	22
51T	30/30	26/26	20/20	30
58T	34/34	28/30	22/22	36
61W	28/28	22/24	36	28
72W	32/32	26/26	20/22	N/A
85W	32/32	26/26	20/22	N/A
96W	36/36	28/30	24/24	N/A
110W	36/36	28/30	24/24	N/A

Circuiting
H – Half Circuit
F – Full Circuit
D – Double Circuit

A – supplier sourced
B – supplier sourced
C – supplier sourced
D – supplier sourced
E – Carrier sourced

Coating
N – Non-Coated
E – E-Coated

Hand
R – Right
L – Left

Header Style
E – 1.5" MPT Standard
F – 2.0" MPT Standard
G – 2.5" MPT Standard
H – 3.0" MPT Standard
J – 4.0" MPT Standard
K – 1.5" MPT Non-Ferrous
L – 2.0" MPT Non-Ferrous
M – 2.5" MPT Non-Ferrous
P – 3.0" MPT Non-Ferrous
Q – 4.0" MPT Non-Ferrous

39M Unit Size	DBTS* (in.)	39M Unit Size	DBTS* (in.)
03W	20	**25W**	74
06W	34	**30T**	59
07T	26	**30W**	92
08W	40	**35T**	67
09T	29	**36W**	96
10W	52	**37T**	59
11T	32	**40W**	96
12T	35	**42T**	67
12W	52	**50W**	104
14W	59	**51T**	81
16T	38	**58T**	81
17W	65	**61W**	104
18T	41	**72W**	107
21W	65	**85W**	126
22T	47	**96W**	126
25T	49	**110W**	144

Tube Wall and Hairpin Type
5/8 in. O.D. Copper Tube
C – .020 Std. Hairpin
D – .035 Std. Hairpin

No.		Fin Material	Fins Per Inch	Casing Material
A	–	AL	8	Galv.
E	–	AL	9	Galv.
V	–	AL	10	Galv.
D	–	AL	11	Galv.
C	–	AL	12	Galv.
W	–	AL	13	Galv.
F	–	AL	14	Galv.
G	–	AL	8	St. Stl.
L	–	AL	9	St. Stl.
Y	–	AL	10	St. Stl.
K	–	AL	11	St. Stl.
J	–	AL	12	St. Stl.
Z	–	AL	13	St. Stl.
M	–	AL	14	St. Stl.
N	–	CU	8	St. Stl.
S	–	CU	9	St. Stl.
2	–	CU	10	St. Stl.
R	–	CU	11	St. Stl.
Q	–	CU	12	St. Stl.
3	–	CU	13	St. Stl.
T	–	CU	14	St. Stl.

*Distance between tube sheets.

Fig. 8 — 28MD, 28MJ (5/8-in. Water Coil) Nomenclature

28MK M R S XXXXXXXXXX –

28MK – Humidifier

39M Unit Size
Code Size

B – 03	**M** – 30
C – 06	**N** – 36
D – 08	**P** – 40
F – 10	**Q** – 50
G – 12	**R** – 61
H – 14	**S** – 72
J – 17	**T** – 85
K – 21	**V** – 96
L – 25	**W** – 110

Revision Level
– Current Revision

XXXXXXXXXX – Always

Frame Material
S – Stainless Steel

Hand
R – Right
L – Left

Fig. 9 — 28MK (Humidifier) Nomenclature

39MG C 11 M B B S1 N B G XX –

39MG – Gas Heat

39M Unit Size

C – 06W	**M** – 30W	**W** – 110W
D – 08W	**N** – 36W	
F – 10W	**P** – 40W	
G – 12W	**Q** – 50W	
H – 14W	**R** – 61W	
J – 17W	**S** – 72W	
K – 21W	**T** – 85W	
L – 25W	**V** – 96W	

Carrier Gas Heat Code
11-35 – Duct Furnaces
36-62 – Rack Furnaces

Sequence
M – Master
S – Slave

Electric Power
B – 120-1-60

Revision Level

XX – Always

Unit Exterior
G – Galvanized
P – Pre-Paint

HX* Tube Construction (Type Steel)
B – 409 SS HX (Galv. Frame)
C – 304 SS HX (Galv. Frame)

Fuel Type
N – Natural Gas
L – Propane

Altitude and Country
S1 – 0-2000/USA
C1 – 0-4500/Canada
H2 – 2001-3000/USA
H3 – 3001-4000/USA
H4 – 4001-5000/USA
4501-5000/Canada
H5 – 5001-6000/USA and Canada
H6 – 6001-7000/USA and Canada

Control Signal
B – 0-10 VDC

***HX** – Heat Exchanger

Fig. 10 — 39MG Gas-Fired Furnace Nomenclature

93 MR 01 18 B A 02 0 1 0 3 S –

Fan Motor

MR – High Efficiency
MS – Premium Efficiency

Horsepower*

01 – 1/2	**12** – 25
02 – 3/4	**13** – 30
03 – 1	**14** – 40
04 – 1-1/2	**15** – 50
05 – 2	**16** – 60
06 – 3	**17** – 75
07 – 5	**18** – 100
08 – 7-1/2	**19** – 125
09 – 10	**20** – 150
10 – 15	**21** – 200
11 – 20	

Voltage
02 – 115/230-1-60
03 – 230-1-60
05 – 230/460-3-60
07 – 575-3-60
18 – 460-3-60
21 – 400-3-50
25 – 208/230/460-3-60
28 – 200/400-3-50
(190/380-3-50)
30 – 230/400-3-50

RPM Synchronous
A – 1200 60 Hz
B – 1800 60 Hz
C – 3600 60 Hz
D – 1000 50 Hz
E – 1500 50 Hz
F – 3000 50 Hz

Type
A – Open Drip Proof/Open Slotted Band
C – Totally Enclosed - Fan Cooled

Revision Level

Fan Application
R – Return/Exhaust
S – Supply

Supplier Designation

Not Used
(Always 0)

Application Mounting
1 – F1†
2 – F2†
3 – F3**

Insulation Class/Shaft Grounding
0 – Vendors (Std.)/No
1 – Vendors (Std.)/Yes

Frame

01 – 48	**38** – 365T
02 – 56	**39** – 404T
25 – 143T	**40** – 405T
26 – 145T	**41** – 444T
27 – 182T	**42** – 445T
28 – 184T	**43** – 286TS
29 – 213T	**44** – 324TS
30 – 215T	**45** – 326TS
31 – 254T	**46** – 364TS
32 – 256T	**47** – 365TS
33 – 284T	**48** – 405TS
34 – 286T	**51** – 404TS
35 – 324T	**52** – 444TS
36 – 326T	**53** – 445TS
37 – 364T	**54** – 284TS

* Not all horsepower values shown are applicable to 39M units.
† F3 Box location may be substituted for either F1 or F2.
**F3 Mounting may only be available on ODP Motors.
Mounting numbers apply when facing Motor Shaft end.

Fig. 11 — NEMA Fan Motor Nomenclature

39MN Indoor Unit Dimensions

39MN UNIT SIZE	UNIT CASING	
	H (in.)	W (in.)
03W	37	33.0
06W	37	46.0
07T	60	39.0
08W	40	54.0
09T	57	42.0
10W	40	67.0
11T	66	45.0
12T	66	48.0
12W	47	67.0
14W	47	72.0
16T	75	51.0
17W	50	79.0
18T	78	54.0
21W	60	79.0
22T	84	60.0
25T	89	61.0
25W	60	86.0
30T	89	72.0
30W	60	104.0
35T	92	80.0
36W	71	109.0
37T	108	72.0
40W	77	109.0
42T	107	80.0
50W	87	117.0
51T	107	93.5
58T	120	93.5
61W	102	117.0
72W	113	120.0
85W	113	139.0
96W	126	139.0
110W	126	157.0

NOTES:
1. Weights and dimensions are approximate. For more exact dimensions, consult with a local Carrier Sales Engineer or select the desired unit using ***AHU*Builder®** software.
2. All dimensions in inches, unless otherwise noted.
3. Unit height based on 6-in. base rail option.

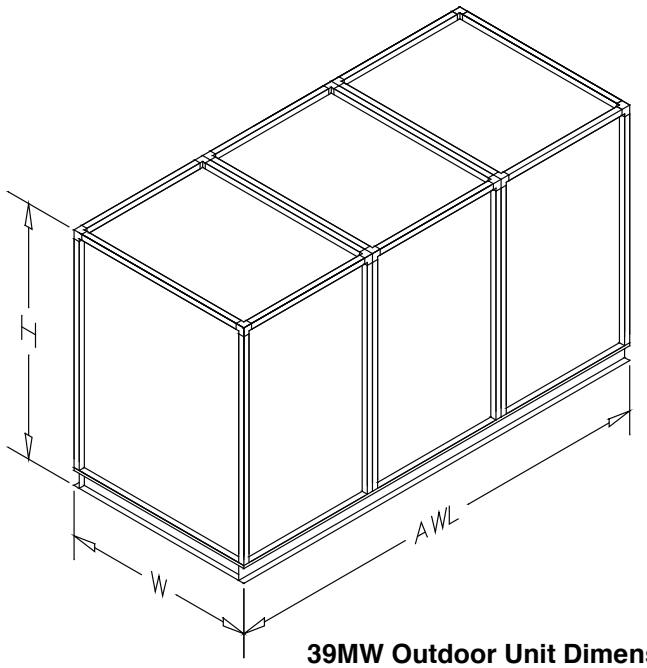

39MW Outdoor Unit Dimensions

39MW UNIT SIZE	UNIT CASING	
	H (in.)	W (in.)
03W	41	36.0
06W	41	49.0
07T	62	42.0
08W	44	57.0
09T	61	45.0
10W	44	70.0
11T	70	48.0
12T	70	51.0
12W	51	70.0
14W	51	75.0
16T	79	54.0
17W	54	82.0
18T	82	57.0
21W	64	82.0
22T	88	63.0
25T	93	64.0
25W	64	89.0
30T	93	75.0
30W	64	107.0
35T	96	83.0
36W	75	112.0
37T	112	75.0
40W	81	112.0
42T	111	83.0
50W	91	120.0
51T	111	96.5
58T	124	96.5
61W	106	120.0
72W	117	123.0
85W	117	142.0
96W	130	142.0
110W	130	160.0

NOTES:
1. Weights and dimensions are approximate. For more exact dimensions, consult with a local Carrier Sales Engineer or select the desired unit using ***AHU*Builder®** software.
2. All dimensions in inches, unless otherwise noted.
3. Unit height based on 6-in. base rail option.

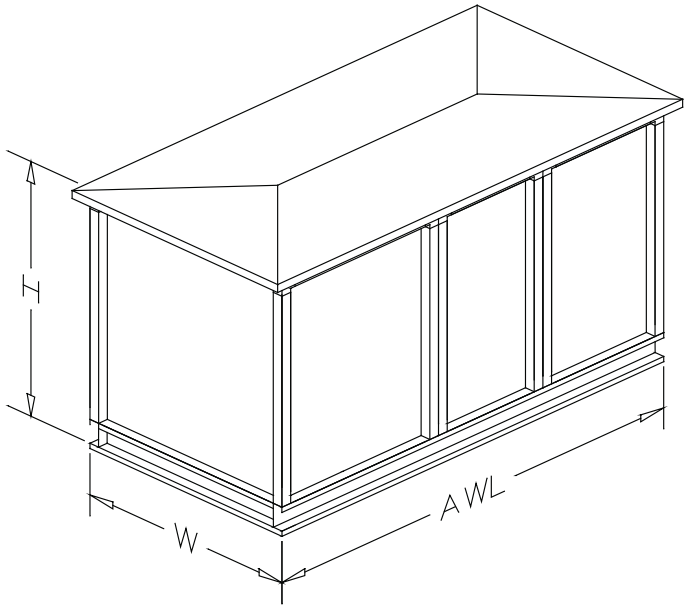

Fig. 12 — Base Unit Dimensions

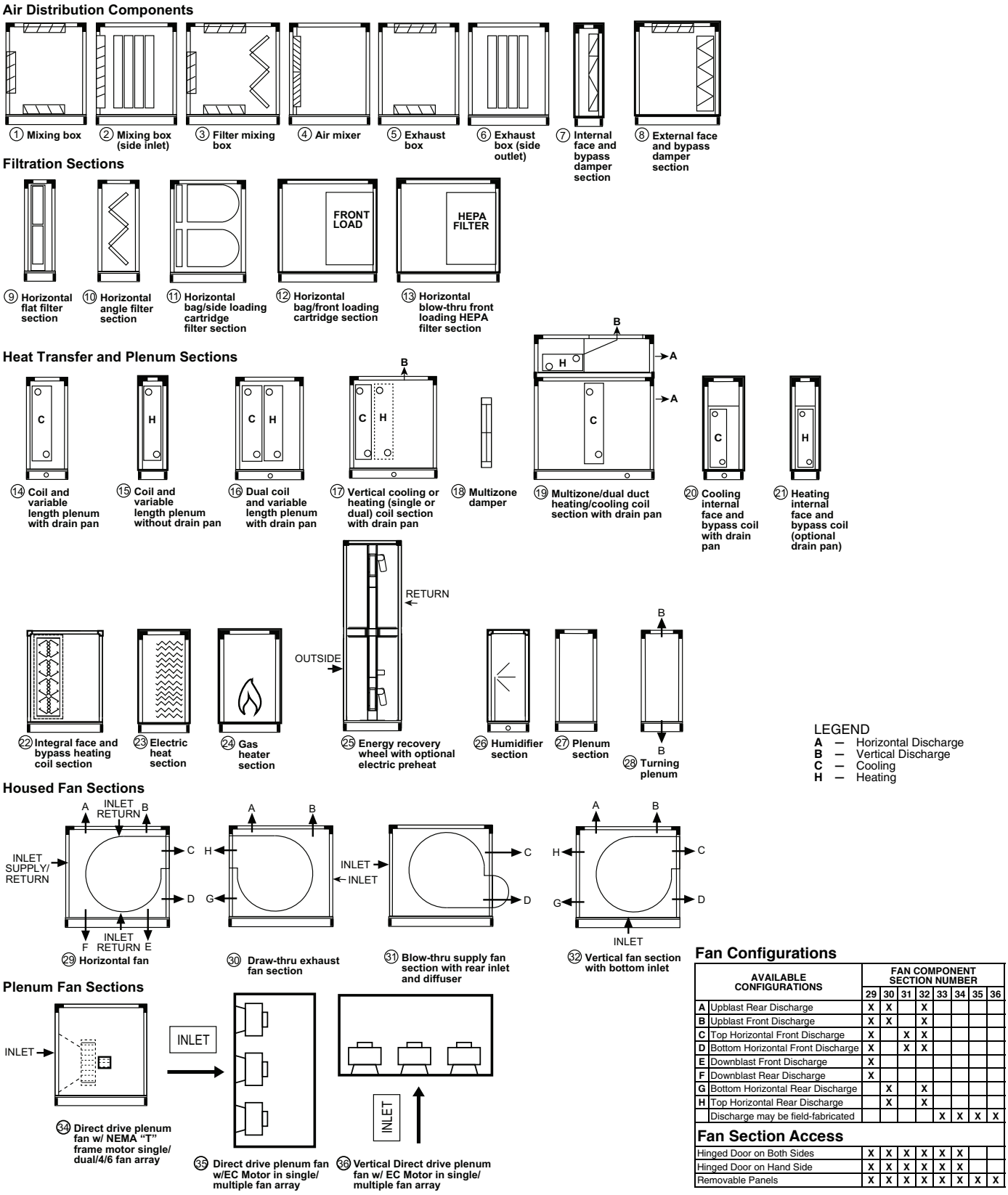

Fan Configurations

AVAILABLE CONFIGURATIONS		FAN COMPONENT SECTION NUMBER							
		29	30	31	32	33	34	35	36
A	Upblast Rear Discharge	X	X		X				
B	Upblast Front Discharge	X	X		X				
C	Top Horizontal Front Discharge	X		X	X				
D	Bottom Horizontal Front Discharge	X		X	X				
E	Downblast Front Discharge	X							
F	Downblast Rear Discharge	X							
G	Bottom Horizontal Rear Discharge		X		X				
H	Top Horizontal Rear Discharge		X		X				
	Discharge may be field-fabricated					X	X	X	X
Fan Section Access									
Hinged Door on Both Sides		X	X	X	X	X	X		
Hinged Door on Hand Side		X	X	X	X	X	X		
Removable Panels		X	X	X	X	X	X	X	X

X = Standard configuration

Fig. 13 — Component Drawings (Refer to Tables 1-3)

Table 1 — 39MN,MW Component Weights and Lengths, Sizes 03W to 21W

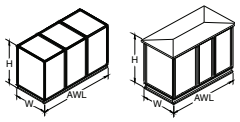

			SECTION DIMENSIONS (in.) AND WEIGHTS (lb)													
		Nominal cfm at 500 fpm	1500	3000	3500	4000	4500	5000	5500	6000	6000	7000	8000	8500	9000	10500
		Unit Size	03W	06W	07T	08W	09T	10W	11T	12W	12T	14W	16T	17W	18T	21W
		Indoor H (in.)	37	37	66	40	63	40	72	47	72	47	69	50	72	60
		Outdoor H (in.)	41	41	70	44	67	44	76	51	76	51	73	54	76	64
		Indoor W (in.)	33	46	39	54	42	67	45	67	48	72	51	79	54	86
		Outdoor W (in.)	36	49	42	57	45	70	48	70	51	75	54	82	57	89
ITEM NO.	DESCRIPTION		AWL (in.) (INDOOR/OUTDOOR) WEIGHT (lb)													
1	Mixing box		18 145	21 169	27 192	21 188	27 210	21 210	33 228	21 227	33 237	24 243	33 273	24 264	33 291	27 301
2	Side inlet mixing box		21 158	27 186	21 262	27 223	27 285	33 277	27 309	33 293	27 320	39 332	27 367	39 350	27 391	39 388
3	Filter mixing box		36 274	36 323	36 323	36 365	34 349	36 410	40 401	36 448	40 420	36 468	41 509	36 518	41 547	36 575
4	Air Mixer		18 167	18 198	18 241	18 224	18 268	24 281	24 295	24 606	24 309	24 318	24 363	30 380	30 390	30 418
5	Exhaust Box		18 159	21 192	27 216	21 213	27 236	21 236	33 257	21 251	33 267	24 174	33 308	24 297	33 328	27 335
6	Side outlet exhaust box		21 171	27 214	21 212	27 238	27 231	33 291	27 251	33 305	27 261	39 346	27 380	39 375	27 404	39 400
7	Internal face and bypass damper section		18 137	18 156	18 191	18 172	18 198	18 191	18 206	18 199	18 210	18 207	18 224	18 221	18 232	18 233
8	External face and bypass damper section		18 219	21 291	*	21 336	*	21 384	*	21 425	*	24 473	33 532	24 534	33 576	27 624
9	Horizontal flat filter section (2-in. or 4-in. side loading)		12 189	12 227	12 273	12 255	12 293	12 286	12 314	12 309	12 324	12 330	12 364	12 364	12 385	12 406
	Horizontal flat filter with pre-filter (2-in. or 4-in. side loading)		14 185	14 234	14 282	14 263	14 302	14 295	14 323	14 318	14 333	14 340	14 374	14 375	14 395	14 417
10	Horizontal angle filter section (2-in. or 4-in. side loading)		24 224	24 269	27 322	24 302	27 345	24 339	23 368	24 364	23 379	24 388	26 424	24 427	26 447	24 471
11	Horizontal bag/cartridge filter section, SL (6-in. or 12-in. median with 2-in. pre-filter)		24 228	24 273	24 329	24 306	24 352	24 343	24 375	24 369	24 386	24 393	24 432	24 432	24 455	24 478
	Horizontal bag/cartridge filter section, SL (15-in. or 30-in. media with or without header)		42 282	42 336	42 408	42 377	42 434	42 422	42 459	42 153	42 472	42 480	42 523	42 526	42 548	42 579
12	Horizontal bag/cartridge filter section, SL		48 301	48 357	48 435	48 400	48 461	48 449	48 488	48 481	48 501	48 509	48 554	48 557	48 580	48 612
13	Horizontal Blow-Thru HEPA Filter Section, FL		48 301	48 357	48 435	48 400	48 461	48 449	48 488	48 481	48 501	48 509	48 554	48 557	48 580	48 612
14	Coil and variable length plenum (with drain pan)		24 155	24 177	24 217	24 195	24 225	24 217	24 234	24 227	24 238	24 236	24 255	24 252	24 263	24 266
15	Coil and variable length plenum (without drain pan)		12 119	12 135	12 165	12 148	12 171	12 165	12 178	12 171	12 181	12 178	15 194	12 189	12 201	12 199
16	Dual coil and variable length plenum (with drain pan)		30 155	30 177	30 217	30 195	30 225	30 217	30 234	30 227	30 238	30 236	30 255	30 252	30 263	30 266
17	Vertical Coil		42 216	42 145	*	36 253	*	36 281	*	42 325	*	48 360	*	48 389	*	48 425
18	Multi-zone Damper	AWL ZONES	—	5 6	*	5 7	*	5 10	*	5 10	*	5 10	*	5 12	*	5 12
19	Multi-zone/Dual Duct Heating/Cooling Section with Drain Pan†		— —	49 629	*	49 694	*	49 901	*	61 913	*	61 951	*	61 1015	*	73 1191
20	Internal face and bypass coil		24 155	24 177	24 217	24 195	24 225	24 217	24 234	24 227	24 238	24 236	24 255	24 252	24 361	24 266
21	Internal face and bypass heating coil		12 119	12 135	12 165	12 148	24 225	12 165	12 178	12 171	12 181	12 178	12 194	12 189	12 201	12 199
22	Internal face and bypass heating coil section		— —	48 265	48 317	48 293	48 331	48 327	48 344	48 344	48 351	48 357	48 920	48 382	48 988	48 406
23	Electric Heat Section with Control Box — Low Amp	Indoor (in.)	24 196	30 264	30 319	30 601	30 344	30 369	30 371	30 382	32 396	30 431	32 438	32 438	30 456	30 485
	Electric Heat Section with Control Box — High Amp	Indoor (in.)	36 232	36 285	— —	42 348	— —	42 397	— —	42 427	— —	42 454	42 461	42 500	42 485	30 485

Table 1 — 39MN,MW Component Weights and Lengths, Sizes 03W to 21W (cont)

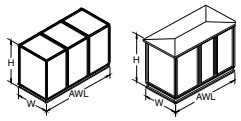

		SECTION DIMENSIONS (in.) AND WEIGHTS (lb)													
	Nominal cfm at 500 fpm	1500	3000	3500	4000	4500	5000	5500	6000	6000	7000	8000	8500	9000	10500
	Unit Size	03W	06W	07T	08W	09T	10W	11T	12W	12T	14W	16T	17W	18T	21W
	Indoor H (in.)	37	37	66	40	63	40	72	47	72	47	69	50	72	60
	Outdoor H (in.)	41	41	70	44	67	44	76	51	76	51	73	54	76	64
	Indoor W (in.)	33	46	39	54	42	67	45	67	48	72	51	79	54	86
	Outdoor W (in.)	36	49	42	57	45	70	48	70	51	75	54	82	57	89
ITEM NO.	**DESCRIPTION**	**AWL (in.) (INDOOR/OUTDOOR) WEIGHT (lb)***													
24	Gas Heat — Low Capacity	— / —	61 / 498	*	85 / 800	*	85 / 903	*	85 / 947	*	85 / 978	85 / 1089	85 / 1075	*	91 / 1235
	Gas Heat — Medium Capacity	— / —	61 / 555	*	85 / 826	*	85 / 936	*	85 / 1036	*	85 / 1067	85 / 1373	121 / 1565	*	127 / 1800
	Gas Heat — High Capacity	— / —	97 / 871	*	121 / 1216	*	121 / 1359	*	121 / 1440	*	121 / 1594	121 / 1814	121 / 1721	*	127 / 1904
25	Energy Recovery Wheel	103 / 1676	103 / 1987	*	109 / 2328	*	109 / 2563	*	109 / 2815	*	115 / 3157		121 / 3514	*	121 / 3871
26	Humidified Section — 36 in.	24 / 254	24 / 295	24 / 317	24 / 325	24 / 341	24 / 360	24 / 366	24 / 382	24 / 378	24 / 403	24 / 428	24 / 437	24 / 453	24 / 476
	Humidified Section — 48 in.	48 / 326	48 / 379	48 / 411	48 / 419	48 / 411	48 / 465	48 / 471	48 / 493	48 / 486	48 / 519	48 / 546	48 / 562	48 / 576	48 / 609
27	Plenum Section — 12 in.	12 / 120	12 / 140	12 / 152	12 / 150	12 / 178	12 / 170	12 / 185	12 / 180	12 / 188	12 / 190	12 / 195	12 / 200	12 / 210	12 / 220
	Plenum Section — 18 in.	18 / 140	18 / 160	18 / 173	18 / 180	18 / 202	18 / 190	18 / 210	18 / 210	18 / 214	18 / 210	18 / 220	18 / 230	18 / 245	18 / 260
	Plenum Section — 24 in.	24 / 158	24 / 190	24 / 197	24 / 210	24 / 231	24 / 230	24 / 240	24 / 240	24 / 244	24 / 250	24 / 260	24 / 270	24 / 285	24 / 300
	Plenum Section — 36 in.	36 / 194	36 / 240	36 / 236	36 / 260	36 / 277	36 / 280	36 / 288	36 / 300	36 / 293	36 / 310	36 / 325	36 / 340	36 / 355	36 / 380
	Plenum Section — 48 in.	48 / 230	48 / 264	48 / 299	48 / 310	48 / 331	48 / 340	48 / 344	48 / 360	48 / 351	48 / 380	48 / 395	48 / 410	48 / 430	48 / 450
28	Turning Plenum	24 / 169	24 / 195	**	24 / 218	**	24 / 244	**	24 / 262	**	24 / 273	**	24 / 296	**	30 / 351
29, 30, 31	Airfoil Fan	39 / 559	39 / 674	48 / 806	40 / 772	48 / 843	40 / 849	53 / 993	34 / 929	53 / 1028	34 / 984	53 / 1125	46 / 1160	61 / 1204	46 / 1277
	Downblast Airfoil Fan	39 / 559	39 / 670	48 / 804	40 / 761	48 / 861	40 / 849	53 / 1007	37 / 888	53 / 1043	37 / 999	56 / 1137	49 / 1158	64 / 1214	49 / 1402
	Forward Curved Fan	24 / 512	30 / 654	40 / 765	36 / 799	40 / 824	36 / 874	43 / 919	42 / 970	43 / 950	48 / 1055	49 / 1155	48 / 1277	49 / 1232	48 / 1365
32	Vertical Forward Curved Fan	42 / 587	42 / 696	*	36 / 784	*	36 / 867	*	42 / 976	*	48 / 1066	*	48 / 1213	*	48 / 1474
	Vertical Airfoil Fan	42 / 581	42 / 696	*	36 / 771	*	36 / 848	*	42 / 968	*	48 / 1114	*	48 / 1162	*	48 / 1346
34	Direct-Drive Plenum Fan with NEMA "T" Frame Motor	34 / 302	36 / 405	35 / 434	38 / 462	38 / 509	42 / 555	40 / 583	42 / 610	41 / 600	46 / 662	46 / 783††	49 / 812	49 / 853††	51 / 1014
	Direct-Drive Plenum Fan Array with NEMA "T" Frame Motor	— / —	— / —	**	37 / 541	**	37 / 578	**	40 / 648	**	38 / 705	**	39 / 788	*	42 / 881
35	Direct-Drive Plenum Fan with EC Motor	††	††	††	††	††	††	††	††	††	††	††	—	—	—
	Direct-Drive Plenum Fan Array with EC Motor	††	††	††	††	††	††	††	††	††	††	††	††	††	††
36	Vertical Direct-Drive Plenum Fan with EC Motor	††	††	—	††	—	††	—	††	—	—	—	—	—	—
	Vertical Direct-Drive Fan Array with EC Motor	††	††	—	††	—	††	—	††	—	—	—	—	—	—

LEGEND
AF — Airfoil
AWL — Airway Length
FC — Forward Curved
FL — Face Load
H — Height
SL — Side Load
W — Width

* Future offering.
† Height varies depending on configuration/damper selection.
** Data pending, contact Application Engineering.
†† Refer to AHUBuilder program for weights of outdoor units.

NOTE(S):
1. Refer to the Aero® Product Data Catalog for additional application information.
2. Section weights do not include coils or motors. Refer to the product data catalog for additional weights.
3. Section height is the same except as noted.
4. All bold numbers are inches, non-bold are pounds unless otherwise noted.

Table 2 — 39MN,MW Component Weights and Lengths, Sizes 22T to 42T

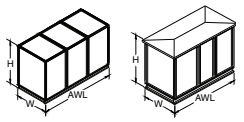

			SECTION DIMENSIONS (in.) AND WEIGHTS (lb)									
		Nominal cfm at 500 fpm	11000	12500	125000	15000	15000	17500	18000	18500	20000	21000
		Unit Size	22T	25W	25T	30W	30T	35T	36W	37T	40W	42T
		Indoor H (in.)	78	60	83	60	83	86	71	102	77	113
		Outdoor H (in.)	82	64	87	64	87	90	75	106	81	117
		Indoor W (in.)	60	86	61	104	72	80	109	72	109	80
		Outdoor W (in.)	63	89	64	107	75	83	112	75	112	83
ITEM NO.	DESCRIPTION		AWL (in.) (INDOOR/OUTDOOR) WEIGHT (lb)									
1	Mixing box		39 327	27 315	45 354	27 409	45 399	45 444	36 503	45 461	39 538	51 506
2	Side inlet mixing box		33 437	45 439	33 473	51 601	39 531	39 590	57 656	39 613	57 741	45 672
3	Filter mixing box		48 624	36 622	53 681	36 766	51 776	53 872	45 903	50 910	48 971	58 1003
4	Air Mixer		30 444	30 445	30 485	36 606	36 553	36 621	36 666	36 648	42 741	42 716
5	Exhaust Box		39 370	27 347	45 400	27 455	45 452	45 503	36 570	45 523	39 612	51 575
6	Side outlet exhaust box		33 450	45 457	33 484	51 618	39 652	39 600	57 728	39 623	57 752	45 681
7	Internal face and bypass damper section		18 247	18 243	18 258	18 323	18 276	18 295	18 357	18 302	18 365	18 321
8	External face and bypass damper section		39 664	27 697	45 731	27 858	45 841	45 951	33 1022	45 995	33 1097	†
9	Horizontal flat filter section (2-in. or 4-in. side loading)		12 425	12 444	12 456	12 555	12 506	12 557	12 620	12 557	12 657	12 628
	Horizontal flat filter with pre-filter (2-in. or 4-in. side loading)		14 436	14 456	14 467	14 568	14 519	14 570	14 635	14 591	14 673	14 642
10	Horizontal angle filter section (2-in. or 4-in. side loading)		23 493	24 514	30 517	24 638	30 584	23 640	26 725	27 663	24 749	26 720
11	Horizontal bag/cartridge filter section, SL (6-in. or 12-in. median with 2-in. pre-filter)		24 500	24 520	24 534	24 645	24 591	24 648	24 729	24 671	24 770	24 727
	Horizontal bag/cartridge filter section, SL (15-in. or 30-in. media with or without header)		42 599	42 625	42 638	42 770	42 702	42 765	42 864	42 791	42 909	42 855
12	Horizontal bag/cartridge filter section, SL		48 633	48 660	48 673	48 811	48 739	48 805	48 912	48 831	48 958	48 897
13	Horizontal Blow-Thru HEPA Filter Section, FL		48 633	48 660	48 673	48 811	48 739	48 805	48 913	48 831	48 959	48 898
14	Coil and variable length plenum (with drain pan)		24 280	24 278	24 293	24 365	24 314	24 336	24 402	24 344	24 411	24 365
15	Coil and variable length plenum (without drain pan)		12 213	12 208	12 223	12 282	12 239	12 256	12 312	12 262	12 319	12 278
16	Dual coil and variable length plenum (with drain pan)		30 280	30 278	30 293	30 365	30 314	30 336	— —	— —	— —	30 365
17	Vertical Coil		*	60 520	*	60 672	*	*	60 769	*	60 799	*
18	Multi-zone Damper	AWL ZONES	*	5 13	*	5 16	*	*	5 17	*	5 17	*
19	Multi-zone/Dual Duct Heating/Cooling Section with Drain Pan†		*	73 1252	*	73 1528	*	*	85 1756	*	91 1923	*
20	Internal face and bypass coil		24 280	24 278	24 293	14 365	24 314	24 336	24 402	24 344	24 411	24 365
21	Internal face and bypass heating coil		12 213	12 208	12 223	12 282	12 239	12 256	12 312	12 262	12 319	12 278
22	Internal face and bypass heating coil section		48 460	48 424	48 500	48 537	48 473	48 507	48 590	48 635	48 605	48 555
23	Electric Heat Section with Control Box — Low Amp	Indoor (in.)	30 506	30 528	30 543	30 661	30 605	30 667	30 762	30 692	30 803	30 754
	Electric Heat Section with Control Box — High Amp	Indoor (in.)	42 532	42 556	42 568	30 661	42 628	42 687	30 762	42 711	30 803	*
24	Gas Heat — Low Capacity		*	91 1282	*	97 1440	97 1534	97 1693	100 2092	100 1756	99 2174	*
	Gas Heat — Medium Capacity		*	127 1861	*	108 1708	108 2193	169 2485	100 2456	100 2602	166 3635	*
	Gas Heat — High Capacity		*	127 1965	*	163 3365	163 2700	169 3016	189 3133	189 3143	166 4363	*

Table 2 — 39MN,MW Component Weights and Lengths, Sizes 22T to 42T (cont)

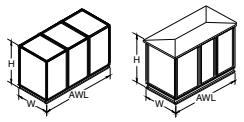

		SECTION DIMENSIONS (in.) AND WEIGHTS (lb)									
	Nominal cfm at 500 fpm	11000	12500	125000	15000	15000	17500	18000	18500	20000	21000
	Unit Size	22T	25W	25T	30W	30T	35T	36W	37T	40W	42T
	Indoor H (in.)	78	60	83	60	83	86	71	102	77	113
	Outdoor H (in.)	82	64	87	64	87	90	75	106	81	117
	Indoor W (in.)	60	86	61	104	72	80	109	72	109	80
	Outdoor W (in.)	63	89	64	107	75	83	112	75	112	83
ITEM NO.	**DESCRIPTION**	**AWL (in.) (Indoor/Outdoor) Weight (lb)**									
25	**Energy Recovery Wheel**	*	138 4483	*	138 5388	*	— —	— —	— —	— —	*
26	**Humidified Section — 36 in.**	24 502	24 512	24 539	24 630	24 601	24 663	24 714	24 687	24 749	24 749
	Humidified Section — 48 in.	48 636	48 652	48 681	48 796	48 756	48 831	48 894	48 861	48 934	48 936
27	**Plenum Section — 12 in.**	12 225	12 230	12 245	12 260	12 250	12 267	12 310	12 315	12 320	12 291
	Plenum Section — 18 in.	18 265	18 270	18 285	18 300	18 285	18 304	18 350	18 360	18 370	18 331
	Plenum Section — 24 in.	24 310	24 320	24 235	24 350	24 324	24 346	24 410	24 420	24 430	24 378
	Plenum Section — 36 in.	36 390	36 400	36 420	36 440	36 390	36 416	36 510	36 525	36 540	36 453
	Plenum Section — 48 in.	48 460	48 470	48 500	48 530	48 473	48 507	48 620	48 635	48 650	48 555
28	**Turning Plenum**	**	30 369	**	30 473	**	**	33 563	**	33 587	**
29, 30, 31	**Airfoil Fan**	64 1362	46 1460	66 1480	58 1770	66 1677	77 1875	57 1991	77 1954	63 2181	88 2463
	Downblast Airfoil Fan	67 1368	49 1508	72 1483	61 1841	72 1676	84 1869	57 1988	84 1946	63 2191	88 2460
	Forward Curved Fan	49 1387	60 1586	58 1504	60 1799	59 1698	59 1892	60 2044	59 1969	60 2154	88 2262
32	**Vertical Forward Curved Fan**	*	60 1536	*	60 1912	*	*	60 2181	*	50 2083	*
	Vertical Airfoil Fan	*	60 1538	*	60 1942	*	*	60 2179	*	66 2350	*
34	**Direct-Drive Plenum Fan with NEMA "T" Frame Motor**	51 995††	54 1123	54 1101††	54 1273	54 1278††	61 1454††	61 1627	62 1525††	62 1723	59 1810
	Direct-Drive Plenum Fan Array with NEMA "T" Frame Motor	*	44 951	*	44 1180	*	*	47 1436	*	47 1474	**
35	**Direct-Drive Plenum Fan Array with EC Motor**	††	††	††	††	††	††	††	††	††	††
36	**Vertical Direct-Drive Plenum Fan Array with EC Motor**	—	††	—	††	—	—	††	—	††	—

LEGEND
AF — Airfoil
AWL — Airway Length
FC — Forward Curved
FL — Face Load
H — Height
SL — Side Load
W — Width

* Future offering.
† Height varies depending on configuration/damper selection.
** Data pending, contact Application Engineering.
†† Refer to AHUBuilder program for weights of outdoor units.

NOTE(S):
1. Refer to the Aero® Product Data Catalog for additional application information.
2. Section weights do not include coils or motors. Refer to the product data catalog for additional weights.
3. Section height is the same except as noted.
All bold numbers are inches, non-bold are pounds unless otherwise noted.

Table 3 — 39MN,MW Component Weights and Lengths, Sizes 50W to 110W

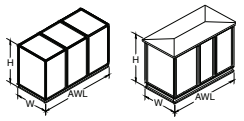

			SECTION DIMENSIONS (in.) AND WEIGHTS (lb)							
		Nominal cfm at 500 fpm	25000	25500	29000	30500	36000	42500	48000	55000
		Unit Size	50W	51T	58T	61W	72W	85W	96W	110W
		Indoor H (in.)	87	113	120	102	113	113	126	126
		Outdoor H (in.)	91	117	124	106	117	117	130	130
		Indoor W (in.)	117	93.5	93.5	117	120	139	139	157
		Outdoor W (in.)	120	96.5	96.5	120	123	142	142	160
ITEM NO.	DESCRIPTION		AWL (in.) (Indoor/Outdoor) Weight (lb)							
1	Mixing box		42 719	51 587	51 650	51 723	53 795	53 874	59 1187	59 1286
2	Side inlet mixing box		63 913	45 777	45 859	63 979	57 953	65 1166	65 1229	73 1410
3	Filter mixing box		51 1132	58 1176	58 1310	60 1345	79 1675	79 1861	84 2050	84 2240
4	Air Mixer		42 824	42 838	42 933	48 951	60 1195	66 1371	69 1487	69 1487
5	Exhaust Box		42 700	51 667	51 739	51 830	54 914	53 1003	59 1160	59 1160
6	Side outlet exhaust box		63 912	45 646	45 866	63 978	57 954	65 1169	65 1231	73 1415
7	Internal face and bypass damper section		18 394	18 454	18 380	18 414	18 435	18 475	18 493	18 527
8	External face and bypass damper section		39 1327	*	*	45 1573	54 1837	53 2092	59 2389	59 2389
9	Horizontal flat filter section (2-in. or 4-in. side loading)		12 757	12 719	12 790	12 858	12 959	12 1019	12 1189	12 1189
	Horizontal flat filter with pre-filter (2-in. or 4-in. side loading)		14 774	14 735	14 807	14 875	14 978	14 1112	14 1211	14 1211
10	Horizontal angle filter section (2-in. or 4-in. side loading)		24 856	26 822	23 902	24 961	27 1098	27 1246	27 1349	27 1349
11	Horizontal bag/cartridge filter section, SL (6-in. or 12-in. median with 2-in. pre-filter)		24 880	24 830	24 909	24 989	24 1101	24 1245	24 1351	24 1351
	Horizontal bag/cartridge filter section, SL (15-in. or 30-in. media with or without header)		42 1031	42 969	42 1059	42 1151	42 1272	42 1272	42 1434	42 1549
12	Horizontal bag/cartridge filter section, SL		48 1084	48 1016	48 1109	48 1207	48 1328	48 1496	48 1614	48 1614
13	Horizontal Blow-Thru HEPA Filter Section, FL		48 1085	48 1016	48 1109	48 1207	48 1329	48 1496	48 1614	48 1614
14	Coil and variable length plenum (with drain pan)		24 451	24 403	24 433	24 475	24 499	24 542	24 562	24 601
15	Coil and variable length plenum (without drain pan)		12 343	12 307	12 330	12 361	12 378	12 412	12 427	12 458
16	Dual coil and variable length plenum (with drain pan)		— —	30 365	— —	30 403	30 433	— —	— —	— —
17	Vertical Coil		66 946	*	*	66 1030	— —	— —	— —	— —
18	Multi-zone Damper	AWL ZONES	5 18	*	*	5 18	— —	— —	— —	— —
19	Multi-zone/Dual Duct Heating/Cooling Section with Drain Pan		103 2316	*	*	121 2725	— —	— —	— —	— —
20	Internal face and bypass coil		24 451	24 403	24 433	24 475	24 499	24 542	24 562	24 601
21	Internal face and bypass heating coil		12 343	12 307	12 330	12 361	12 378	12 412	12 427	12 458
22	Internal face and bypass heating coil section		48 655	48 616	48 664	48 695	48 732	48 801	48 835	48 889
23	Electric Heat Section with Control Box — Low Amp	Indoor (in.)	30 916	30 866	30 935	30 4025	30 1133	30 1281	30 1386	30 1530
	Electric Heat Section with Control Box — High Amp	Indoor (in.)	30 916	*	*	30 1025	30 1133	30 1281	30 1386	30 1530

Table 3 — 39MN,MW Component Weights and Lengths, Sizes 50W to 110W (cont)

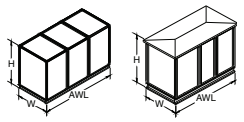

		SECTION DIMENSIONS (in.) AND WEIGHTS (lb)							
	Nominal cfm at 500 fpm	25000	25500	29000	30500	36000	42500	48000	55000
	Unit Size	50W	51T	58T	61W	72W	85W	96W	110W
	Indoor H (in.)	87	113	120	102	113	113	126	126
	Outdoor H (in.)	91	117	124	106	117	117	130	130
	Indoor W (in.)	117	93.5	93.5	117	120	139	139	157
	Outdoor W (in.)	120	96.5	96.5	120	123	142	142	160
ITEM NO.	DESCRIPTION	AWL (in.) (INDOOR/OUTDOOR) WEIGHT (lb)							
24	Gas Heat — Low Capacity	102 2385	*	*	102 2506	100 2894	100 3166	104 3562	104 3962
	Gas Heat — Medium Capacity	168 4038	*	*	169 4178	167 4908	112 4107	171 6543	171 6543
	Gas Heat — High Capacity	192 3482	*	*	169 5002	167 6132	167 6590	195 5667	195 7669
25	Energy Recovery Wheel	— —	*	*	— —	— —	— —	— —	— —
26	Humidified Section — 36 in.	24 851	24 861	24 317	24 943	— —	— —	— —	— —
	Humidified Section — 48 in.	48 1060	48 1071	48 411	48 1166	— —	— —	— —	— —
27	Plenum Section — 12 in.	12 370	12 322	12 346	12 420	12 460	12 520	12 570	12 630
	Plenum Section — 18 in.	18 430	18 367	18 394	18 480	18 530	18 590	18 650	18 720
	Plenum Section — 24 in.	24 490	24 418	24 449	24 550	24 600	24 680	24 740	24 820
	Plenum Section — 36 in.	36 620	36 502	36 540	36 700	36 760	36 860	36 940	36 1040
	Plenum Section — 48 in.	48 750	48 616	48 664	48 850	48 920	48 1040	48 1140	48 1260
28	Turning Plenum	36 686	**	**	36 751	34 796	34 876	38 971	38 971
29, 30, 31	Airfoil Fan	69 2641	96 2781	104 3125	69 2997	70 3320	76 3844	76 4241	72 4693
	Downblast Airfoil Fan	69 2514	96 2771	104 3026	69 2979	72 3307	79 3753	79 4153	86 4638
	Forward Curved Fan	64 2598	96 2554	104 2974	66 2811	70 3320	76 3844	76 4240	81 4703
32	Vertical Forward Curved Fan	66 2684	*	*	66 3003	— —	— —	— —	— —
	Vertical Airfoil Fan	72 2712	*	*	78 3222	— —	— —	— —	— —
34	Direct-Drive Plenum Fan w/NEMA "T" Frame Motor	67 2077	63 2120	63 2140	68 2159	— —	— —	— —	— —
	Direct-Drive Plenum Fan Array w/ "T" Frame Motor	50 2748	**	**	50 2869	51 3233	54 3985	54 4198	54 4333
35	Direct-Drive Plenum Fan Array w/EC Motor[1]	††	††	††	††	††	††	††	††
36	Vertical Direct-Drive Plenum Fan Array w/ EC Motor[1]	††	—	—	††	—	—	—	—

LEGEND
AF — Airfoil
AWL — Airway Length
FC — Forward Curved
FL — Face Load
H — Height
SL — Side Load
W — Width

* Future offering.
† Height varies depending on configuration/damper selection.
** Data pending, contact Application Engineering.
†† Refer to AHUBuilder program for weights of outdoor units.

NOTE(S):
1. Refer to the AERO® 39M product data catalog for additional application information.
2. Section weights do not include coils or motors. Refer to the AHUBuilder program for additional weights.
3. Section height is the same except as noted.
4. Section height includes 6-in. baserail.

Table 4 — Direct Drive Plenum Fan with NEMA T-Frame Motors — Section AWL

FAN SIZE	MOTOR FRAME	DT SUP / EXHAUST (in.)	BT SUP / RETURN (in.)
105	56	32	32
	143T	34	33
	145T	36	35
	182T	34	36
	184T	37	38
122	56	34	33
	143T	35	34
	145T	37	36
	182T	36	37
	184T	39	40
135	143T	35	34
	145T	37	37
	182T	36	37
	184T	39	40
	213T	39	42
150	143T	38	37
	145T	40	39
	182T	38	40
	184T	41	42
	213T	41	44
	215T	42	46
165	143T	38	37
	145T	40	40
	182T	39	40
	184T	42	43
	213T	42	45
	215T	43	47
182	143T	41	39
	145T	43	42
	182T	41	42
	184T	44	45
	213T	44	47
	215T	45	49
	254T	46	55
200	143T	43	41
	145T	44	43
	182T	43	44
	184T	46	47
	213T	45	49
	215T	47	50
	254T	48	57
	256T	48	57

LEGEND

AWL — Airway Length
BT — Blow Thru
DT — Draw Thru

FAN SIZE	MOTOR FRAME	DT SUP / EXHAUST (in.)	BT SUP / RETURN (in.)
222	143T	47	43
	145T	47	45
	182T	47	46
	184T	47	49
	213T	47	51
	215T	49	52
	254T	50	59
	256T	50	59
245	182T	48	47
	184T	49	50
	213T	49	52
	215T	50	54
	254T	51	60
	256T	51	60
270	184T	51	52
	213T	51	54
	215T	52	56
	254T	54	62
	256T	54	62
	284T	57	68
300	213T	57	58
	215T	57	60
	254T	58	66
	256T	58	66
	284T	61	72
	286T	61	72
	324T	62	77
330	215T	59	61
	254T	59	68
	256T	59	68
	284T	62	74
	286T	62	74
	324T	64	78
	326T	64	78
	364T	65	84
365	256T	63	72
	284T	67	78
	286T	67	78
	324T	68	82
	326T	68	82
	364T	69	88
402	256T	66	74
	284T	69	80
	286T	69	80
	324T	71	85
	326T	71	85
	364T	72	90
	365T	72	90

Table 5 — Physical Data — Fan Offerings by Unit Size and Type

39M UNIT SIZE	FORWARD CURVE FANS											
	SUPPLY						RETURN / EXHAUST					
	FAN WHEEL	HP / FRAME		FAN WHEEL	HP / FRAME		FAN WHEEL	HP / FRAME		FAN WHEEL	HP / FRAME	
		MAX	MIN		MAX	MIN		MAX	MIN		MAX	MIN
03W	N/A	N/A	N/A	A9-4A	5 / 184T	0.5 / 56	N/A	N/A	N/A	A9-4A	5 / 184T	0.5 / 56
06W	A10-8A	5 / 184T	0.75 / 56	A10-8A	5 / 184T	0.75 / 56	A9-4A	5 / 184T	0.5 / 56	A10-8A	5 / 184T	0.75 / 56
07T	A10-8A	7.5/213T	0.5 / 56	A12-12A	7.5 / 213T	0.5 /56	A10-8A	7.5 / 213T	0.5 / 56	A12-12A	7.5 / 213T	0.5 / 56
08W	A10-8A	7.5 / 213T	3 / 182T	A12-12A	5 / 184T	0.75 / 56	A10-8A	7.5 / 213T	3 / 182T	A12-12A	5 / 184T	0.75 / 56
09T	A10-8A	7.5 / 213T	0.5 / 56	A12-12A	7.5 / 213T	0.5 / 56	A10-8A	7.5 / 213T	0.5 / 56	A12-12A	7.5 / 213T	0.5 / 56
10W	A12-12A	10 / 215T	5 / 184T	A15-15A	5 / 184T	1 / 143T	A12-12A	10 / 215T	5 / 184T	A15-15A	5 / 184T	1 / 143T
11T	A12-12A	10 / 215T	0.75 / 56	A15-15A	10 / 215T	0.75 / 56	A12-12A	10 / 215T	0.75 / 56	A15-15A	10 / 215T	0.75 / 56
12T	A12-12A	10 / 215T	0.75 / 56	A15-15A	10 / 215T	0.75 / 56	A12-12A	10 / 215T	0.75 / 56	A15-15A	10 / 215T	0.75 / 56
12W	A12-11A	15 / 254T	5 / 184T	A15-15A	7.5 / 213T	1.5 / 145T	A12-12A	10 / 215T	5 / 184T	A15-15A	7.5 / 213T	1.5 / 145T
14W	A15-15A	15 / 254T	5 / 184T	A18-18A	7.5 / 213T	1.5 / 145T	A15-15A	15 / 254T	5 / 184T	A18-18A	7.5 / 213T	1.5 / 145T
16T	A-15-15A	15 / 254T	5 / 184T	A18-18A	10 / 215T	1.5 / 145T	A-15-15A	15 / 254T	5 / 184T	A18-18A	10 / 215T	1.5 / 145T
17W	A15-15A	25 / 284T	7.5 / 213T	A18-18A	10 / 215T	1.5 / 145T	A15-15A	25 / 284T	7.5 / 213T	A18-18A	10 / 215T	1.5 / 145T
18T	A-15-15A	25 / 284T	7.5 / 213T	A18-18A	11 / 215T	1.5 / 145T	A-15-15A	25 / 284T	7.5 / 213T	A18-18A	11 / 215T	1.5 / 145T
21W	A15-15A	25 / 284T	7.5 / 213T	A20-18A	15 / 254T	2 / 145T	A18-18A	10 / 215T	1.5 / 145T	A20-18A	15 / 254T	2 / 145T
22T	A-15-15A	26 / 284T	7.5 / 213T	A20-18A	15 / 254T	2 / 145T	A-15-15A	26 / 284T	7.5 / 213T	A20-18A	15 / 254T	2 / 145T
25T	A20-15A	25 / 284T	10 / 215T	A20-18A	16 / 254T	3 / 145T	A20-15A	25 / 284T	10 / 215T	A20-18A	16 / 254T	3 / 145T
25W	A20-15A	25 / 284T	10 / 215T	A20-18A	15 / 254T	2 / 145T	A18-18A	10 / 215T	1.5 / 145T	A20-18A	15 / 254T	2 / 145T
30T	A20-18H	30 / 286T	10 / 215T	A20-20H	20 / 256T	3 / 182T	A20-18H	30 / 286T	10 / 215T	A20-20H	20 / 256T	3 / 182T
30W	A20-18H	30 / 286T	10 / 215T	A20-20H	20 / 256T	3 / 182T	A20-18H	30 / 286T	10 / 215T	A20-20H	20 / 256T	3 / 182T
35T	A20-20H	20 / 256T	3 / 182T	A22-22H	30 / 286T	15 / 254T	A20-20H	20 / 256T	3 / 182T	A22-22H	30 / 286T	15 / 254T
36W	A22-22H	30 / 286T	15 / 254T	A25-25H	25 / 284T	3 / 182T	A20-20H	20 / 256T	3 / 182T	A25-25H	25 / 284T	3 / 182T
37T	A22-22H	30 / 286T	15 / 254T	A25-25H	25 / 284T	3 / 182T	A22-22H	30 / 286T	15 / 254T	A25-25H	25 / 284T	3 / 182T
40W	A25-20H	30 / 286T	15 / 254T	A25-25H	25 / 284T	3 / 182T	A20-20H	20 / 256T	3 / 182T	A25-25H	25 / 284T	3 / 182T
42T	A25-20H	30 / 286T	3 / 182T	A25-25H	30 / 286T	3 / 182T	A25-20H	30 / 286T	3 / 182T	A25-25H	30 / 286T	3 / 182T
50W	A27-22H	40 / 324T	15 / 254T	A27-27H	30 / 286T	5 / 184T	A25-25H	25 / 284T	3 / 182T	A27-27H	30 / 286T	5 / 184T
51T	A27-22H	40 / 324T	3 / 182T	A27-27H	40 / 324T	3 / 182T	A27-22H	40 / 324T	3 / 182T	A27-27H	40 / 324T	3 / 182T
58T	A27-27H	50 / 326T	5 / 184T	A30-30H	40 / 324T	3 / 182T	A27-27H	50 / 326T	5 / 184T	A30-30H	40 / 324T	3 / 182T
61W	A27-27H	50 / 326T	20 / 256T	A30-30H	40 / 324T	5 / 184T	A27-27H	50 / 326T	20 / 256T	A30-30H	40 / 324T	5 / 184T
72W	32	75 / 365T	10 / 215T	36	75 / 365T	10 / 215T	32	75 / 365T	10 / 215T	36	75 / 365T	10 / 215T
85W	36	75 / 365T	10 / 215T	40	75 / 365T	10 / 215T	36	75 / 365T	10 / 215T	40	75 / 365T	10 / 215T
96W	N/A	N/A	N/A	40	75 / 365T	10 / 215T	N/A	N/A	N/A	40	75 / 365T	10 / 215T
110W	N/A	N/A	N/A	40	75 / 365T	10 / 215T	N/A	N/A	N/A	40	75 / 365T	10 / 215T

Table 5 — Physical Data — Fan Offerings by Unit Size and Type (cont)

AIRFOIL FANS												
39M UNIT SIZE	SUPPLY						RETURN / EXHAUST					
	A			B			A			B		
	FAN WHEEL	HP / FRAME		FAN WHEEL	HP / FRAME		FAN WHEEL	HP / FRAME		FAN WHEEL	HP / FRAME	
		MAX	MIN		MAX	MIN		MAX	MIN		MAX	MIN
03W	N/A	N/A	N/A	101	5 / 184T	0.5 / 56	N/A	N/A	N/A	101	5 / 184T	0.5 / 56
06W	101	5 / 184T	0.5 / 56	121	7.5 / 184T	0.5 / 56	101	5 / 184T	0.5 / 56	121	7.5 / 184T	0.5 / 56
07T	121	10 / 215T	1 / 143T	131	15 / 254T	1.5 / 145T	121	10 / 215T	1 / 143T	131	15 / 254T	1.5 / 145T
08W	121	7.5 / 184T	0.5 / 56	131	10 / 215T	1 / 143T	121	7.5 / 184T	0.5 / 56	131	10 / 215T	1 / 143T
09T	121	10 / 215T	1 / 143T	131	15 / 254T	1.5 / 145T	121	10 / 215T	1 / 143T	131	15 / 254T	1.5 / 145T
10W	121	7.5 / 184T	0.5 / 56	131	15 / 254T	1.5 / 145T	121	7.5 / 184T	0.5 / 56	131	15 / 254T	1.5 / 145T
11T	131	15 / 254T	1.5 / 145T	161	20 / 256T	1.5 / 145T	131	15 / 254T	1.5 / 145T	161	20 / 256T	1.5 / 145T
12T	131	15 / 254T	1.5 / 145T	161	20 / 256T	1.5 / 145T	131	15 / 254T	1.5 / 145T	161	20 / 256T	1.5 / 145T
12W	131	15 / 254T	1.5 / 145T	161	15 / 254T	1.5 / 145T	131	15 / 254T	1.5 / 145T	161	15 / 254T	1.5 / 145T
14W	131	15 / 254T	1.5 / 145T	161	20 / 256T	1.5 / 145T	131	15 / 254T	1.5 / 145T	161	20 / 256T	1.5 / 145T
16T	131	15 / 254T	1.5 / 145T	161	20 / 256T	1.5 / 145T	131	15 / 254T	1.5 / 145T	161	20 / 256T	1.5 / 145T
17W	161	20 / 256T	1.5 / 145T	181	20 / 256T	1.5 / 145T	161	20 / 256T	1.5 / 145T	181	20 / 256T	1.5 / 145T
18T	161	20 / 256T	1.5 / 145T	181	20 / 256T	1.5 / 145T	161	20 / 256T	1.5 / 145T	181	20 / 256T	1.5 / 145T
21W	181	20 / 256T	1.5 / 145T	201	25 / 284T	2 / 145T	181	20 / 256T	1.5 / 145T	201	25 / 284T	2 / 145T
22T	181	20 / 256T	1.5 / 145T	201	25 / 284T	2 / 145T	181	20 / 256T	1.5 / 145T	201	25 / 284T	2 / 145T
25T	201	25 / 284T	2 / 145T	221	30 / 286T	2 / 145T	201	25 / 284T	2 / 145T	221	30 / 286T	2 / 145T
25W	201	25 / 284T	2 / 145T	221	30 / 286T	2 / 145T	201	25 / 284T	2 / 145T	221	30 / 286T	2 / 145T
30T	221	40 / 324T	3 / 182T	221	40 / 324T	5 / 184T	221	40 / 324T	3 / 182T	221	40 / 324T	5 / 184T
30W	N/A	N/A	N/A	221	40 / 324T	3 / 182T	N/A	N/A	N/A	221	40 / 324T	3 / 182T
35T	241	40 / 324T	5 / 184T	271	15 / 254T	3 / 182T	241	40 / 324T	5 / 184T	271	15 / 254T	3 / 182T
36W	271	40 / 324T	3 / 182T	241	40 / 324T	5 / 184T	241	40 / 324T	5 / 184T	271	40 / 324T	3 / 182T
37T	241	40 / 324T	5 / 184T	271	15 / 254T	3 / 182T	241	40 / 324T	5 / 184T	271	15 / 254T	3 / 182T
40W	301	50 / 326T	3 / 182T	271	50 / 326T	5 / 184T	271	50 / 326T	5 / 184T	301	50 / 326T	3 / 182T
42T	271	40 / 324T	5 / 184T	301	50 / 326T	3 / 182T	271	40 / 324T	5 / 184T	301	50 / 326T	3 / 182T
50W	331	60 / 364T	5 / 184T	301	60 / 364T	7.5 / 213T	301	60 / 364T	7.5 / 213T	331	60 / 364T	5 / 184T
51T	301	60 / 364T	7.5 / 213T	331	40 / 324T	5 / 184T	301	60 / 364T	7.5 / 213T	331	40 / 324T	5 / 184T
58T	331	60 / 364T	5 / 184T	361	60 / 364T	5 / 184T	331	60 / 364T	5 / 184T	361	60 / 364T	5 / 184T
61W	301	60 / 364T	7.5 / 213T	331	75 / 365T	7.5 / 213T	331	75 / 365T	7.5 / 213T	361	20 / 256T	5 / 184T
72W	32	75 / 365T	7.5 / 213T	36	100 / 405T	7.5 / 213T	32	75 / 365T	7.5 / 213T	36	100 / 405T	7.5 / 213T
85W	36	100 / 405T	7.5 / 213T	40	125 /444T	10 / 215T	36	100 / 405T	7.5 / 213T	40	125 /444T	10 / 215T
96W	36	100 / 405T	7.5 / 213T	40	125 /444T	10 / 215T	36	100 / 405T	7.5 / 213T	40	125 /444T	10 / 215T
110W	40	125 /444T	10 / 215T	44	150 / 445T	15 / 254T	40	125 /444T	10 / 215T	44	150 / 445T	15 / 254T

Table 5 — Physical Data — Fan Offerings by Unit Size and Type (cont)

DIRECT DRIVE PLENUM FANS WITH NEMA T-FRAME MOTORS									
39M UNIT SIZE	SUPPLY/RETURN/EXHAUST								
	FAN WHEEL SIZE A	HP / FRAME		FAN WHEEL SIZE B	HP / FRAME		FAN WHEEL SIZE C	HP / FRAME	
		MAX	MIN		MAX	MIN		MAX	MIN
03W	105	5 / 184T	0.5 / 56	122	5 / 184T	0.5 / 56	N/A	N/A	N/A
06W	135	7.5 / 213T	1 / 143T	150	7.5 / 215T	1 / 143T	165	10 / 215T	1 / 143T
07T	135	7.5 / 213T	1 / 143T	150	7.5 / 215T	1 / 143T	165	10 / 215T	1 / 143T
08W	150	7.5 / 215T	1 / 143T	165	10 / 215T	1 / 143T	182	15 / 254T	1 / 143T
09T	150	7.5 / 215T	1 / 143T	165	10 / 215T	1 / 143T	182	15 / 254T	1 / 143T
10W	165	10 / 215T	1 / 143T	182	15 / 254T	1 / 143T	200	15 / 256T	1 / 143T
11T	165	10 / 215T	1 / 143T	182	15 / 254T	1 / 143T	200	15 / 256T	1 / 143T
12T	182	15 / 254T	1 / 143T	200	15 / 256T	1 / 143T	222	20 / 256T	1 / 143T
12W	182	15 / 254T	1 / 143T	200	15 / 254T	1 / 143T	222	20 / 256T	1 / 143T
14W	200	15 / 254T	1 / 143T	222	20 / 256T	1 / 143T	245	20 / 256T	1.5 / 182T
16T	200	15 / 256T	1 / 143T	222	20 / 256T	1 / 143T	245	20 / 256	1.5 / 182T
17W	222	20 / 256T	1 / 143T	245	20 / 256T	1.5 / 182T	270	25 / 284T	2 / 184T
18T	222	20 / 256T	1 / 143T	245	20 / 256T	1.5 / 182T	270	25 / 284T	2 / 184T
21W	245	20 / 256T	1.5 / 182T	270	25 / 284T	2 / 184T	300	30 / 324T	3 / 213T
22T	245	20 / 256T	1.5 / 182T	270	25 / 284T	2 / 184T	300	30 / 286T	3 / 213T
25T	270	25 / 284T	2 / 184T	300	30 / 286T	3 / 213T	330	40 / 364T	5/215T
25W	270	25 / 284T	2 / 184T	300	30 / 326T	3 / 213T	330	40 / 364T	5 / 215T
30T	270	25 / 284T	2 / 184T	330	40 / 364T	5 / 215T	365	50 / 364T	10 / 256T
30W	270	25 / 284T	2 / 184T	330	40 / 364T	6 / 215T	365	50 / 364T	10 / 256T
35T	300	30 / 286T	3 / 213T	330	40 / 364T	5 / 215T	365	50 / 364T	10 / 256T
36W	300	30 / 326T	3 / 213T	365	50 / 364T	10 / 256T	402	50 / 365T	10 / 256T
37T	330	40 / 364T	5 / 215T	365	50 / 364T	10 / 256T	402	50 / 365T	10 / 256T
40W	330	40 / 364T	5 / 215T	365	50 / 364T	10 / 256T	402	50 / 365T	10 / 256T
42T	330	40 / 364T	5 / 215T	365	50 / 364T	10 / 256T	402	50 / 365T	10 / 256T
50W	365	50 / 364T	10 / 256T	402	50 / 365T	10 / 256T	N/A	N/A	N/A
51T	365	50 / 364T	10 / 256T	402	50 / 365T	10 / 256T	N/A	N/A	N/A
58T	365	50 / 364T	10 / 256T	402	50 / 365T	10 / 256T	N/A	N/A	N/A
61W	365	50 / 364T	10 / 256T	402	50 / 365T	10 / 256T	N/A	N/A	N/A

DIRECT DRIVE PLENUM FAN ARRAYS WITH NEMA T-FRAME MOTORS									
39M UNIT SIZE	SUPPLY/RETURN/EXHAUST								
	2 FAN WHEELS	HP / FRAME		4 FAN WHEELS	HP / FRAME		6 FAN WHEELS	HP / FRAME	
		MAX	MIN		MAX	MIN		MAX	MIN
08W	135	7.5 / 213T	1 / 143T	N/A	N/A	N/A	N/A	N/A	N/A
10W	135	7.5 / 213T	1 / 143T	N/A	N/A	N/A	N/A	N/A	N/A
	150	7.5 / 215T	1 / 143T	N/A	N/A	N/A	N/A	N/A	N/A
12W	150	7.5 / 215T	1 / 143T	N/A	N/A	N/A	N/A	N/A	N/A
	165	10 / 215T	1 / 143T	N/A	N/A	N/A	N/A	N/A	N/A
14W	150	7.5 / 215T	1 / 143T	N/A	N/A	N/A	N/A	N/A	N/A
	165	10 / 215T	1 / 143T	N/A	N/A	N/A	N/A	N/A	N/A
17W	165	10 / 215T	1 / 143T	N/A	N/A	N/A	N/A	N/A	N/A
	182	15 / 254T	1 / 143T	N/A	N/A	N/A	N/A	N/A	N/A
21W	165	10 / 215T	1 / 143T	N/A	N/A	N/A	N/A	N/A	N/A
	182	15 / 254T	1 / 143T	N/A	N/A	N/A	N/A	N/A	N/A
25W	182	15 / 254T	1 / 143T	N/A	N/A	N/A	N/A	N/A	N/A
	222	20 / 256T	1 / 143T	N/A	N/A	N/A	N/A	N/A	N/A
30W	182	15 / 254T	1 / 143T	N/A	N/A	N/A	N/A	N/A	N/A
	222	20 / 256T	1 / 143T	N/A	N/A	N/A	N/A	N/A	N/A
36W	222	20 / 256T	1 / 143T	N/A	N/A	N/A	N/A	N/A	N/A
	270	25 / 284T	2 / 184T	N/A	N/A	N/A	N/A	N/A	N/A
40W	222	20 / 256T	1 / 143T	182	15 / 254T	1 / 143T	N/A	N/A	N/A
	270	25 / 284T	2 / 184T						
50W	270	25 / 284T	2 / 184T	200	15/256T	1 / 143T	182	15 / 254T	1 / 143T
	300	30 / 286T	3/ 213T						
61W	300	30 / 286T	3 / 213T	245	20 / 256T	1.5 / 182T	182	15 / 254T	1 / 143T
	330	40 / 364T	5 / 215T						
72W	330	40 / 364T	5 / 215T	N/A	N/A	N/A	200	15 / 256T	1 / 143T
	365	50 / 364T	10 / 256T						
85W	365	50 / 364T	10 / 256T	N/A	N/A	N/A	245	20 / 256T	1.5 / 182T
	402	50 / 365T	10 / 256T						
96W	365	50 / 364T	10 / 256T	N/A	N/A	N/A	245	20 / 256T	3 / 182T
	402	50 / 365T	10 / 256T						
110W	365	50 / 364T	10 / 256T	N/A	N/A	N/A	245	20 / 256T	3 / 182T
	402	50 / 365T	10 / 256T						

Table 5 — Physical Data — Fan Offerings by Unit Size and Type (cont)

DIRECT DRIVE PLENUM FAN ASSEMBLIES WITH EC MOTORS OFFERING

EBM-PAPST, HORIZONTAL

UNIT SIZE	TSP;MAX (IN. WG.)	# FAN	WHEEL SIZE
03W	4	1	310
06W	4	1	310
	6	1	400
	8	1	400
07T	4	1	400
	4	2	310
	4	2	400
	6	1	450
	6	2	400
07W	8	1	400
08W	4	1	400
	4	2	310
	4	2	400
	6	1	450
	6	2	400
	8	1	400
09T	4	1	400
	4	2	400
	6	1	450
	8	2	400
10W	4	1	450
	4	2	450
	4	3	310
	6	1	500
	8	3	310
	8	3	400
11T	4	1	450
	4	2	450
	6	1	500
	6	2	500
	8	2	400
12W	4	1	45
	4	2	450
	6	2	400
	6	3	400
	8	2	400
	8	3	400
12T	4	1	450
	4	3	310
	4	4	310
	6	2	400
	6	3	400
	8	2	400
	8	3	400
14W	4	1	500
	4	2	500
	6	2	450
	6	3	400
	8	2	400

UNIT SIZE	TSP;MAX (IN. WG.)	# FAN	WHEEL SIZE
16T	4	1	500
	4	2	500
	6	2	450
	6	4	310
	8	2	400
	8	3	400
17W	4	2	400
	4	3	400
	6	2	450
	8	3	400
18T	4	2	400
	4	3	400
	6	2	450
	6	4	400
	8	3	400
	8	4	400
21W	4	2	450
	6	2	500
	8	3	400
	8	4	400
22T	4	2	450
	4	3	450
	6	2	500
	6	3	500
	8	3	400
	8	4	400
25W	4	2	450
	4	3	450
	6	3	450
	8	4	400
	8	5	400
25T	4	2	450
	4	3	450
	6	3	450
	6	4	450
	8	4	400
	8	5	400
30W	4	2	500
	4	3	500
	6	3	450
	8	4	400
	8	5	400
30T	4	2	500
	4	3	500
	6	3	450
	6	4	450
	8	4	400
	8	5	400

UNIT SIZE	TSP;MAX (IN. WG.)	# FAN	WHEEL SIZE
35T	4	3	450
	6	4	450
	6	5	450
	6	6	450
	8	5	400
	8	6	400
36W	4	3	450
	4	4	450
	6	4	450
	6	5	450
	6	6	450
	8	5	400
	8	6	400
37T	4	3	450
	4	5	400
	6	4	450
	6	5	450
	6	6	450
	8	5	400
	8	6	400
40W	4	3	500
	4	4	500
	4	5	450
	6	4	450
	6	5	450
	6	6	450
	8	5	400
	8	6	400
42T	4	3	500
	6	4	500
	6	5	450
	6	5	500
	6	6	450
	8	6	400
	8	7	400
50W	4	4	450
	6	5	450
	6	6	450
	6	7	450
	8	7	400
	8	8	400
51T	4	4	450
	4	5	450
	6	5	500
	6	6	450
	6	6	500
	6	7	450
	8	7	400
	8	8	400

UNIT SIZE	TSP;MAX (IN. WG.)	# FAN	WHEEL SIZE
58T	4	4	500
	4	5	450
	4	6	450
	6	5	500
	6	6	500
	8	8	400
	8	9	400
61W	4	4	500
	4	5	500
	6	6	450
	6	7	450
	8	8	400
	8	9	400
72W	4	5	500
	4	6	450
	4	6	500
	4	7	450
	6	7	500
	6	8	500
	6	10	450
	8	9	400
	8	10	400
85W	4	6	500
	4	7	500
	6	8	500
	6	9	500
	6	10	450
	6	11	450
	8	11	400
	8	12	400
96W	4	6	500
	4	7	500
	4	8	450
	4	9	450
	6	9	500
	6	10	500
	8	12	400
	8	13	400
110W	4	7	500
	4	8	500
	6	10	500
	6	11	500
	8	14	400
	8	15	400

Table 5 — Physical Data — Fan Offerings by Unit Size and Type (cont)

DIRECT DRIVE PLENUM FAN ASSEMBLIES WITH EC MOTORS OFFERING

EBM-PAPST, VERTICAL

UNIT SIZE	TSP;MAX (IN. WG.)	# FAN	WHEEL SIZE
03W	4	1	310
	4	2	310
06W	4	1	310
	4	2	310
	6	1	400
	6	2	400
	8	1	400
	8	2	400
08W	4	1	400
	4	2	310
	4	2	400
	6	1	450
	6	2	400
	8	1	400
10W	4	1	450
	4	2	450
	4	3	310
	4	4	310
	6	1	500
	8	3	310
	8	3	400

UNIT SIZE	TSP;MAX (IN. WG.)	# FAN	WHEEL SIZE
12W	4	1	450
	4	2	450
	4	4	310
	4	5	310
	6	2	400
	6	3	400
	8	2	400
	8	3	400
14W	4	1	500
	4	2	500
	4	4	310
	4	5	310
	6	2	450
	6	3	400
	8	2	400
17W	4	2	400
	4	3	400
	6	2	450
	8	3	400
	8	4	400

UNIT SIZE	TSP;MAX (IN. WG.)	# FAN	WHEEL SIZE
21W	4	2	450
	4	4	400
	6	2	500
	6	5	400
	8	3	400
	8	4	400
25W	4	2	450
	4	3	450
	6	3	450
	6	5	400
	8	4	400
	8	5	400
30W	4	2	500
	4	3	500
	6	3	450
	6	6	400
	8	4	400
	8	5	400
36W	4	3	450
	4	4	450
	6	4	450
	6	5	450
	6	6	450
	8	5	400
	8	6	400

UNIT SIZE	TSP;MAX (IN. WG.)	# FAN	WHEEL SIZE
40W	4	3	500
	4	4	500
	4	5	450
	6	4	450
	6	5	450
	6	6	450
	8	5	400
	8	6	400
50W	4	4	450
	6	5	450
	6	6	450
	6	7	450
	8	7	400
	8	8	400
61W	4	4	500
	4	5	500
	6	6	500
	6	7	500
	8	8	400
	8	9	400

Table 5 — Physical Data — Fan Offerings by Unit Size and Type (cont)

DIRECT DRIVE PLENUM FAN ASSEMBLIES WITH EC MOTORS OFFERING

ZIEHL-ABEGG, HORIZONTAL

UNIT SIZE	TSP;MAX (IN. WG.)	# FAN	WHEEL SIZE
03W	4	1	310
	8	1	310
06W	4	1	310
	6	1	400
07T	4	1	400
	6	1	400
	8	2	310
08W	4	1	400
	4	1	450
	6	1	400
	8	2	310
09T	4	1	400
	6	1	450
	8	2	310
10W	4	1	450
	4	2	400
	6	2	310
	8	2	400
11T	4	1	450
	6	2	310
12W	4	1	500
	4	2	400
	6	2	400
	8	2	400
12T	4	1	500
14W	4	2	400
	6	2	400
16T	4	2	400
	4	2	450
	6	2	400
	8	4	310
17W	4	2	400
	4	2	450
	6	2	450
18T	4	2	400
	4	5	310
	4	6	310
	6	2	450
	6	5	310
	8	4	310
21W	4	2	450
	4	5	310
	4	6	310
	6	4	310
	8	5	310
	8	6	310

UNIT SIZE	TSP;MAX (IN. WG.)	# FAN	WHEEL SIZE
22T	4	2	450
	4	5	310
	4	6	310
	6	4	310
	8	5	310
	8	6	310
25W	4	2	500
	4	6	310
	6	5	310
	8	6	310
25T	4	2	500
	4	4	400
	6	4	400
	6	6	310
	8	4	400
30W	4	3	450
	4	7	310
	4	8	310
	6	6	310
	8	7	310
	8	8	310
30T	4	3	450
	4	4	450
	4	8	310
	6	4	400
	8	7	310
	8	8	310
35T	4	3	450
	4	4	450
	4	9	310
	6	4	450
	8	8	310
	8	9	310
36W	4	3	500
	4	5	400
	4	6	400
	6	5	400
	6	6	400
	8	6	400
37T	4	4	400
	4	5	450
	4	6	450
	6	5	400
	6	6	400
	8	6	400
	8	10	310

UNIT SIZE	TSP;MAX (IN. WG.)	# FAN	WHEEL SIZE
40W	4	4	450
	4	5	450
	4	6	450
	6	5	400
	6	6	400
	8	6	400
	8	10	310
42T	4	4	450
	4	5	450
	4	6	450
	6	5	450
	6	6	450
	8	10	310
	8	11	310
50W	4	4	500
	4	5	500
	4	6	450
	4	8	400
	6	6	450
	6	8	400
	8	8	400
	8	13	310
51T	4	4	500
	4	6	450
	4	8	400
	6	6	450
	6	8	400
	8	8	400
	8	9	400
58T	4	5	450
	4	6	450
	4	8	400
	4	9	400
	6	7	400
	6	7	400
	6	8	400
	8	9	400
	8	14	310
61W	4	5	500
	4	6	500
	4	9	400
	4	10	400
	6	8	400
	6	9	400
	8	10	400
	8	11	400

UNIT SIZE	TSP;MAX (IN. WG.)	# FAN	WHEEL SIZE
72W	4	6	500
	4	9	450
	4	11	400
	6	8	450
	6	9	450
	8	11	400
	8	12	400
85W	4	8	450
	4	9	450
	4	10	450
	4	11	450
	6	10	450
	6	11	450
	8	19	310
	8	20	310
96W	4	8	500
	4	9	500
	4	11	450
	4	12	450
	6	11	450
	6	12	450
	8	15	400
	8	16	400
110W	4	9	500
	4	10	500
	4	15	400
	4	16	400
	6	14	400
	6	15	400
	8	17	400
	8	18	400

Table 5 — Physical Data — Fan Offerings by Unit Size and Type (cont)

DIRECT DRIVE PLENUM FAN ASSEMBLIES WITH EC MOTORS OFFERING

ZIEHL-ABEGG, VERTICAL

UNIT SIZE	TSP;MAX (IN. WG.)	# FAN	WHEEL SIZE
03W	4	1	310
	4	2	310
	6	2	310
	6	3	310
	8	1	310
	8	2	310
06W	4	1	310
	4	1	400
	4	2	310
	4	2	400
	4	3	310
	6	1	400
	6	2	400
	6	3	310
	8	1	400
	8	2	400
08W	4	1	400
	4	1	450
	4	2	400
	4	2	450
	4	3	310
	4	4	310
	6	1	400
	6	2	400
	6	4	310
	6	5	310
	8	2	310
	8	3	310

UNIT SIZE	TSP;MAX (IN. WG.)	# FAN	WHEEL SIZE
10W	4	1	450
	4	2	400
	4	2	450
	4	3	400
	4	4	310
	4	5	310
	6	2	310
	6	3	310
	6	4	400
	8	2	400
	8	3	400
12W	4	1	500
	4	2	400
	4	2	500
	4	3	400
	4	4	310
	4	5	310
	6	2	400
	6	3	400
	8	2	400
	8	3	400
14W	4	2	400
	4	3	400
	4	5	310
	4	6	310
	6	2	400
	6	3	400
	8	3	400
	8	4	400

UNIT SIZE	TSP;MAX (IN. WG.)	# FAN	WHEEL SIZE
17W	4	2	400
	4	2	450
	4	3	400
	4	3	450
	6	2	450
	6	3	450
	8	3	400
	8	4	400
21W	4	2	450
	4	3	400
	4	3	450
	4	4	400
	6	3	400
	6	4	400
	8	4	400
25W	4	2	500
	4	3	450
	4	3	500
	4	4	450
	6	3	450
	6	4	450
	8	4	400
30W	4	3	450
	4	4	450
	4	5	450
	6	4	400
	6	5	400
	8	5	400
	8	6	400

UNIT SIZE	TSP;MAX (IN. WG.)	# FAN	WHEEL SIZE
36W	4	3	500
	4	4	500
	4	5	400
	4	6	400
	6	4	450
	6	5	450
	8	6	400
40W	4	5	450
	4	6	450
	6	5	400
	6	6	400
	8	6	400
50W	4	4	500
	4	5	500
	4	6	450
	6	6	450
	8	8	400
61W	4	5	500
	4	6	500

Table 6 — Physical Data — Fan Data by Wheel Diameter and Type

FORWARD CURVE FANS										
FAN WHEEL	WHEEL DIAMETER (in.)	INLET CONE DIAMETER (in.)	MAX SPEED (RPM)		FAN SHAFT DIAMETER (in.)*		FAN WHEEL WEIGHT (LB)		NUMBER OF FAN BLADES	K FACTOR
			CLASS 1	CLASS 2	CLASS 1	CLASS 2	CLASS 1	CLASS 2		
A9-4A	9-1/2	7-13/16	2132	2749	3/4	3/4	4	4	43	†
A10-8A	10-5/8	8-13/16	1806	2347	3/4	1	6	6	48	†
A12-11A	12-5/8	10-3/8	1533	1986	1	1-3/16	10	10	43	†
A12-12A	12-5/8	10-3/8	1491	1938	1	1-3/16	10	10	43	†
A15-15A	15	12-5/8	1262	1639	1-3/16	1-3/16	16	17	51	†
A18-18A	18-1/32	15-1/2	1097	1378	1-3/16	1-7/16	32	34	48	†
A20-15A	20	16-1/4	969	1238	1-7/16	1-11/16	51	51	37	†
A20-18A	20	16-1/4	960	1217	1-7/16	1-11/16	53	53	37	†
A20-18H	20	16-1/4	952	1237	1-3/16	1-7/16	42	45	51	†
A20-20H	20	16-1/4	952	1237	1-3/16	1-7/16	42	45	51	†
A22-22H	22-3/8	18-1/16	884	1119	1-7/16	2-3/16	63	63	37	†
A25-20H	25	21-5/16	770	980	1-11/16	2-7/16	73	73	37	†
A25-25H	25	21-5/16	751	960	1-11/16	2-7/16	81	81	37	†
A27-22H	27-5/8	23-15/16	684	873	1-11/16	2-7/16	101	101	37	†
A27-27H	27-5/8	23-15/16	656	865	1-11/16	2-7/16	111	111	37	†
A30-30H	30-1/4	26-3/8	618	793	1-11/16	2-11/16	128	128	37	†
32	31-1/2	25-3/4	675	760	2-3/16	2-3/16	132	134	38	23,750
36	35-7/16	29	600	660	2-7/16	2-7/16	158	178	42	31,300
40	39	32-3/4	550	600	2-7/16	2-7/16	194	214	48	37,650

AIRFOIL FANS										
FAN WHEEL	WHEEL DIAMETER (in.)	INLET CONE DIAMETER (in.)	MAX SPEED (RPM)		FAN SHAFT DIAMETER (in.)*		FAN WHEEL WEIGHT (LB)		NUMBER OF FAN BLADES	K FACTOR
			CLASS 1	CLASS 2	CLASS 1	CLASS 2	CLASS 1	CLASS 2		
101	10	6-1/8	N/A	4655	N/A	1	N/A	8	18	631
121	12-1/4	7-1/2	N/A	4560	N/A	1-3/16	N/A	11	18	890
131	13-1/2	8-3/8	N/A	4033	N/A	1-7/16	N/A	15	18	1,098
161	16-1/2	10-1/8	N/A	3254	N/A	1-11/16	N/A	37	18	1,560
181	18-1/4	11	2261	2950	1-11/16	1-15/16	52	52	20	1,816
201	20	12-7/16	2019	2598	1-11/16	1-15/16	60	60	20	2,279
221	22-1/4	13-7/8	1872	2442	1-15/16	2-3/16	73	73	20	2,798
241	24-1/2	15-1/8	1701	2218	2-3/16	2-7/16	88	91	20	3,286
271	27	16-13/16	1463	1910	2-3/16	2-7/16	104	106	20	3,992
301	30	18-13/16	1316	1715	2-7/16	2-11/16	136	145	20	4,961
331	33	20-9/16	1202	1568	2-7/16	2-15/16	168	176	20	5,895
361	36-1/2	23-1/8	1055	1378	2-11/16	2-15/16	235	233	18	7,277
32	31-7/8	21-5/8	1300	1700	2-3/16	2-7/16	195	195	10	14,035
36	35-13/16	24	1250	1550	2-7/16	2-3/4	262	273	10	18,400
40	39-3/8	26-7/8	1200	1350	2-3/4	2-15/16	348	358	10	22,750
44	44-3/32	30	850	1150	2-15/16	3-3/16	441	459	10	28,650

*Minimum fan shaft diameter listed. Refer to Tables 22-23 for specific diameter by unit size.

†See the section Fan Airflow Measurement Piezometer Ring on page 118 for K Factor use.

Table 6 — Physical Data — Fan Data by Wheel Diameter and Type (cont)

DIRECT DRIVE PLENUM FANS WITH NEMA T-FRAME MOTORS — SINGLE AND DUAL							
FAN WHEEL	**WHEEL DIAMETER (in.)**	**INLET CONE DIAMETER (in.)**	**MAX SPEED (RPM) CLASS 2**	**MOTOR SHAFT DIAMETER (in.)* CLASS 2**	**FAN WHEEL WEIGHT (lb) CLASS 2**	**NUMBER OF FAN BLADES**	**K FACTOR**
105	10-1/2	6-31/50	5195	5/8	4	9	592
122	12-1/5	7-18/25	4425	5/8	5	9	842
135	13-1/2	8-1/2	4038	7/8	7	9	963
150	15	9-11/25	3650	7/8	11	9	1147
165	16-1/2	10-16/39	3275	7/8	13	9	1450
182	18-1/5	11-1/2	2979	7/8	17	9	1571
200	20	12-23/39	2771	7/8	19	9	2087
222	22-1/5	14-2/67	2454	7/8	26	9	2458
245	24-1/2	15-11/25	2269	1-1/8	32	9	2941
270	27	17-1/33	2035	1-1/8	45	9	3597
300	30	18-47/50	1851	1-3/8	63	9	4641
330	33	20-17/21	1620	1-3/8	75	9	5352
365	36-1/2	23	1465	1-5/8	93	9	6629
402	40-1/5	25-19/50	1330	1-5/8	120	9	7943
DIRECT DRIVE PLENUM FANS — 4 AND 6 FAN ARRAYS							
FAN WHEEL	**WHEEL DIAMETER (in.)**	**INLET CONE DIAMETER (in.)**	**MAX SPEED (RPM) CLASS 2**	**MOTOR SHAFT DIAMETER (in.)* CLASS 2**	**FAN WHEEL WEIGHT (lb) CLASS 2**	**NUMBER OF FAN BLADES**	**K FACTOR**
182	18-1/8	6-5/8	3360	1-1/8	17	9	1673
200	20	7-5/7	3125	1-1/8	19	9	1942
245	24-1/2	8-1/2	2269	1-1/8	32	9	3010

*Minimum fan shaft diameter listed. Refer to Tables 22-23 for specific diameter by unit size.

†See the section Fan Airflow Measurement Piezometer Ring on page 118 for K Factor use.

Table 6 — Physical Data — Fan Data by Wheel Diameter and Type (cont)

DIRECT DRIVE PLENUM FAN ASSEMBLIES WITH ELECTRONICALLY COMMUTED MOTORS									
Supplier	Fan Wheel	Blade Dia. (Ins)	Inlet Cone Min. Dia. (Ins.)	Fan Class	Max Speed (RPM)	Assembly Weight(lbs)	# of Fan Blades	K Factor	K Factor w/ Inlet Guard
EBM	310	12.2	8.33	2	3200	47.2	5	1078	1043
	310	12.2	8.33	2	4000	46.3	5	1078	1043
	310	12.2	8.33	2	4000	46.3	5	1078	1043
	400	15.7	9.41	3	3700	80.0	6	1746	1698
	400	15.7	9.41	3	3700	80.0	6	1746	1698
	400	15.7	9.41	2	3800	66.0	5	1746	1698
	400	15.7	9.41	2	2800	66.0	5	1746	1698
	450	17.7	11.94	2	2300	81.4	5	2229	2156
	450	17.7	11.94	2	2480	81.4	5	2229	2156
	450	17.7	11.94	2	2600	103.6	5	2229	2156
	450	17.7	11.94	2	2600	103.6	5	2229	2156
	500	19.7	13.28	2	2250	111.1	5	2610	2519
	500	19.7	13.28	2	2250	108.7	5	2610	2519
ZA	310	12.2	7.60	2	3550	35.3	7	882	845
	310	12.2	7.60	2	3380	35.3	7	882	845
	310	12.2	7.60	1	3000	35.3	7	882	845
	310	12.2	7.60	2	4240	41.9	7	882	845
	350	13.8	8.58	2	3000	37.5	7	1124	1078
	350	13.8	8.58	1	2770	37.5	7	1124	1078
	400	15.7	9.69	2	2900	79.4	7	1431	1375
	400	15.7	9.69	1	2700	79.4	7	1431	1375
	400	15.7	9.69	2	3200	79.4	7	1431	1375
	400	15.7	9.69	2	3550	77.2	7	1431	1375
	450	17.7	10.94	1	2300	88.2	7	1830	1756
	450	17.7	10.94	2	2630	88.2	7	1830	1756
	500	19.7	12.28	2	2160	110.3	7	2341	2248
	560	22.0	13.66	1	1800	132.3	7	2861	2740

DIRECT DRIVE PLENUM FAN ASSEMBLIES WITH EC MOTORS, DIMENSIONS (in.)					
Fan Manufacturer	Fan Wheel	Motor kW	Assembly Height	Assembly Width	Assembly Length
EBM	310	1.50	19.70	19.70	13.78
	310	3.05	19.70	19.70	14.06
	310	2.95	19.70	19.70	14.06
	400	6.10	19.70	19.70	16.83
	400	6.40	19.70	19.70	16.83
	400	3.65	19.70	19.70	16.37
	400	3.80	19.70	19.70	16.37
	450	3.85	24.80	24.80	17.88
	450	4.45	24.80	24.80	17.88
	450	5.05	24.80	24.80	22.46
	450	5.45	24.80	24.80	22.46
	500	5.70	24.80	24.80	23.66
	500	6.40	24.80	24.80	23.66
ZA	310	2.20	18.50	18.50	11.61
	310	1.90	18.50	18.50	11.61
	310	1.35	18.50	18.50	11.61
	310	3.80	17.72	17.72	12.99
	350	2.50	19.69	19.69	12.44
	350	1.90	19.69	19.69	12.44
	400	4.10	21.65	21.65	14.49
	400	3.40	21.65	21.65	14.49
	400	5.40	21.65	21.65	14.49
	400	5.80	21.65	21.65	13.58
	450	3.60	24.80	24.80	15.63
	450	5.60	24.80	24.80	15.63
	500	5.40	26.38	26.38	17.76
	560	5.20	28.74	28.74	19.02

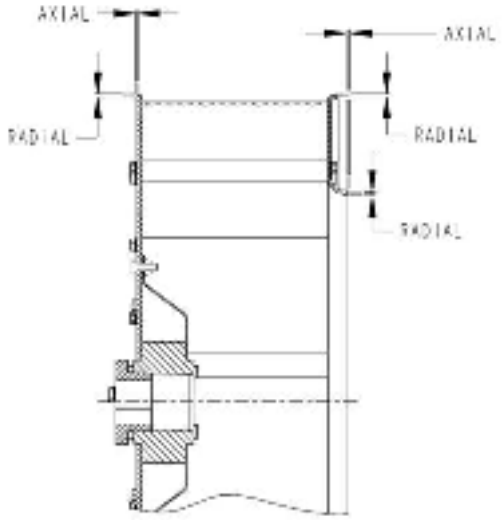

MODEL	MAX ALLOWABLE RADIAL RUNOUT (in.)	MAX ALLOWABLE AXIAL RUNOUT (in.)
105	0.10	0.10
122	0.10	0.10
135	0.10	0.10
150	0.10	0.10
165	0.10	0.10
182	0.15	0.15
200	0.15	0.15
222	0.15	0.15
245	0.15	0.15
270	0.15	0.15
300	0.20	0.20
330	0.20	0.20
365	0.20	0.20
402	0.20	0.20

Fig. 14 — Direct Drive Wheel Dimensions

SINGLE/DUAL DIRECT DRIVE PLENUM FAN WHEEL TO INLET CONE DIMENSIONS (INCHES)						
WHEEL SIZE	A MIN / MAX	B MIN	C (+/- 0.005)	D (+/- 0.03)	E (+/- 0.03)	F MIN / MAX
105	3.34 / 3.53	0.06	3.270	0.38	3.68	0.12 / 0.29
122	3.91 / 4.10	0.07	3.810	0.41	4.27	0.12 / 0.32
135	4.33 / 4.52	0.07	4.200	0.44	4.69	0.12 / 0.35
150	4.79 / 4.98	0.09	4.670	0.50	5.19	0.19 / 0.41
165	5.26 / 5.45	0.11	5.140	0.56	5.75	0.25 / 0.47
182	5.82 / 6.01	0.11	5.680	0.64	6.38	0.31 / 0.50
200	6.50 / 6.69	0.12	6.230	0.71	6.97	0.38 / 0.57
222	7.06 / 7.38	0.14	6.930	0.76	7.81	0.44 / 0.63
245	7.76 / 7.94	0.17	7.630	0.81	8.59	0.50 / 0.69
270	8.54 / 8.73	0.20	8.400	0.89	9.42	0.56 / 0.76
300	9.53 / 9.72	0.24	9.340	1.00	10.47	0.62 / 0.88
330	10.45 / 10.64	0.26	10.270	1.12	11.53	0.75 / 0.10
365	11.61 / 11.80	0.27	11.360	1.25	12.88	0.81 / 1.13
402	12.84 / 13.02	0.31	12.520	1.38	14.19	0.88 / 1.26

4/6 FAN ARRAY DIRECT DRIVE PLENUM FAN WHEEL TO INLET CONE DIMENSIONS (INCHES)						
WHEEL SIZE	A MIN / MAX	B MIN	C (+/- 0.005)	D (+/- 0.03)	E (+/- 0.03)	F MIN / MAX
182	5.82 / 5.92	0.11	5.680	0.64	6.38	0.31 / 0.50
200	6.50 / 6.67	0.12	6.230	0.71	6.97	0.38 / 0.57
222	7.065 / 7.25	0.14	6.930	0.76	7.81	0.44 / 0.63
245	7.755 / 7.85	0.17	7.630	0.81	8.59	0.50 / 0.69

DIRECT DRIVE PLENUM FANS WITH NEMA T FRAME MOTORS- FAN WHEEL TO INLET CONE							
Wheel Size	Array Size	A	B Min.	C (+/- 0.005)	D (+/- 0.03)	E (+/- 0.03)	F
		DIMENSIONS (in.)					
105	1/2	3.34 -3.53	0.06	3.270	0.38	3.68	0.12 - 0.29
122	1/2	3.91 - 4.10	0.07	3.810	0.41	4.27	0.12 - 0.32
135	1/2	4.33 - 4.52	0.07	4.200	0.44	4.69	0.12 - 0.35
150	1/2	4.79 - 4.98	0.09	4.670	0.50	5.19	0.19 - 0.41
165	1/2	5.26 - 5.45	0.11	5.140	0.56	5.75	0.25 - 0.47
182	1/2	5.82 - 6.01	0.11	5.680	0.64	6.38	0.31 - 0.50
182	4/6	5.82 - 5.92	0.11	5.680	0.64	6.38	0.31 - 0.50
200	1/2	6.50 - 6.69	0.12	6.230	0.71	6.97	0.38 - 0.57
200	4/6	6.50 - 6.67	0.12	6.230	0.71	6.97	0.38 - 0.57
222	1/2	7.06 - 7.38	0.14	6.930	0.76	7.81	0.44 - 0.63
245	4/6	7.755 - 7.85	0.17	7.630	0.81	8.59	0.50 - 0.69
245	1/2	7.76 - 7.94	0.17	7.630	0.81	8.59	0.50 - 0.69
270	1/2	8.54 - 8.73	0.2	8.400	0.89	9.42	0.56 - 0.76
300	1/2	9.53 - 9.72	0.24	9.340	1.00	10.47	0.62 - 0.88
330	1/2	10.45 - 10.64	0.26	10.270	1.12	11.53	0.75 - 1.00
365	1/2	11.61 - 11.80	0.27	11.360	1.25	12.88	0.81 - 1.13
402	1/2	12.84 - 13.02	0.31	12.520	1.38	14.19	0.88 - 1.26

LEGEND

A — Assembled dimension, measured axially from wheel back plate to inlet cone

B — Assembled dimension, measured radially from inlet cone to wheel

C — Wheel dimension, 100% bladewidth

D — Wheel dimension, measured axially on front plate

E — Inlet cone dimension, measured axially

F — Assembled dimension, measured axially from inlet cone to wheel front plate

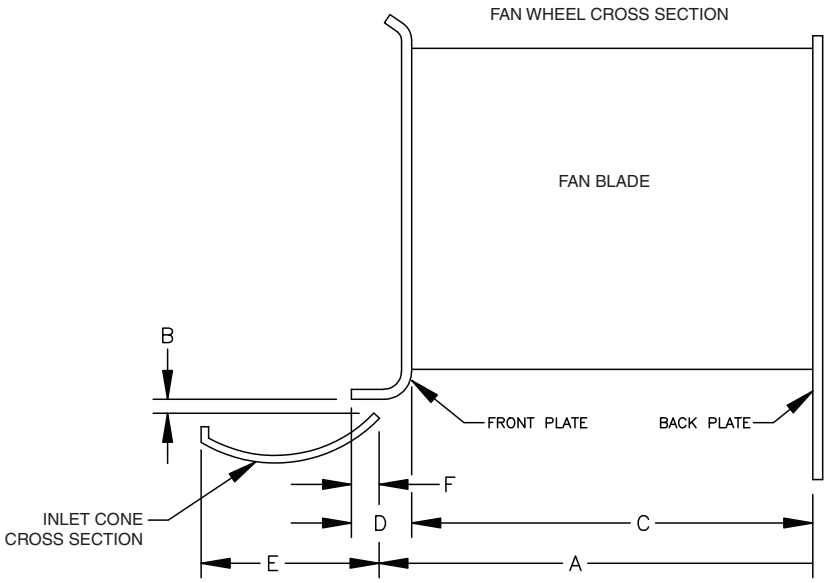

Fig. 15 — Plenum Fan Assemblies with NEMA Motors- Fan Wheel to Inlet Cone Dimensions

Table 7 — Coil Data (03W-12W)

39M UNIT SIZE	03W	06W	07T	08W	09T	10W	11T	12T	12W
1/2-in. CHILLED WATER/DIRECT EXPANSION									
Large Face Area									
Nominal Capacity (cfm) at 500 fpm	1,736	2,951	3,837	3,819	4,531	4,965	5,833	6,380	6,319
Lower Coil Height (in.)	25.0	25.0	42.5	27.5	45.0	27.5	52.5	52.5	35.0
Upper Coil Height (in.)	N/A	N/A	N/A	N/A	N/A	N/A	N/A	N/A	N/A
Length (in.)	20.0	34.0	26.0	40.0	29.0	52.0	32.0	35.0	52.0
Total Face Area (sq ft)	3.5	5.9	7.7	7.6	9.1	9.9	11.7	12.8	12.6
Medium Face Area									
Nominal Capacity (cfm) at 500 fpm	1,215	2,066	2,708	2,778	3,524	3,611	4,444	4,861	4,965
Lower Coil Height (in.)	17.5	17.5	30.0	20.0	35.0	20.0	40.0	40.0	27.5
Upper Coil Height (in.)	N/A	N/A	N/A	N/A	N/A	N/A	N/A	N/A	N/A
Length (in.)	20.0	34.0	26.0	40.0	29.0	52.0	32.0	35.0	52.0
Total Face Area (sq ft)	2.4	4.1	5.4	5.6	7.0	7.2	8.9	9.7	9.9
Bypass Face Area (Internal Chilled Water Only)									
Nominal Capacity (cfm) at 500 fpm	1,042	1,771	2,257	2,431	3,021	3,160	3,889	4,253	4,514
Lower Coil Height (in.)	15.0	15.0	25.0	17.5	30.0	17.5	35.0	35.0	25.0
Upper Coil Height (in.)	N/A	N/A	N/A	N/A	N/A	N/A	N/A	N/A	N/A
Length (in.)	20.0	34.0	26.0	40.0	29.0	52.0	32.0	35.0	52.0
Total Face Area (sq ft)	2.1	3.5	4.5	4.9	6.0	6.3	7.8	8.5	9.0
1/2-in. HOT WATER HEATING									
Large Face Area									
Nominal Capacity (cfm) at 700 fpm	2,431	4,132	5,372	5,347	6,344	6,951	8,167	8,932	8,847
Lower Coil Height (in.)	25.0	25.0	42.5	27.5	45.0	27.5	52.5	52.5	35.0
Upper Coil Height (in.)	N/A	N/A	N/A	N/A	N/A	N/A	N/A	N/A	N/A
Length (in.)	20.0	34.0	26.0	40.0	29.0	52.0	32.0	35.0	52.0
Total Face Area (sq ft)	3.5	5.9	7.7	7.6	9.1	9.9	11.7	12.8	12.6
Medium Face Area									
Nominal Capacity (cfm) at 700 fpm	1,701	2,892	3,792	3,889	4,934	5,056	6,222	6,806	6,951
Lower Coil Height (in.)	17.5	17.5	30.0	20.0	35.0	20.0	40.0	40.0	27.5
Upper Coil Height (in.)	N/A	N/A	N/A	N/A	N/A	N/A	N/A	N/A	N/A
Length (in.)	20.0	34.0	26.0	40.0	29.0	52.0	32.0	35.0	52.0
Total Face Area (sq ft)	2.4	4.1	5.4	5.6	7.0	7.2	8.9	9.7	9.9
Small Face Area									
Nominal Capacity (cfm) at 700 fpm	—	2,479	2,528	2,917	3,524	3,792	4,278	4,679	4,424
Height (in.)	—	15.0	20.0	15.0	25.0	15.0	27.5	27.5	17.5
Length (in.)	—	34.0	26.0	40.0	29.0	52.0	32.0	35.0	52.0
Total Face Area (sq ft)	—	3.5	3.6	4.2	5.0	5.4	6.1	6.7	6.3
Bypass Face Area (Internal)									
Nominal Capacity (cfm) at 700 fpm	1,458	2,479	3,160	3,403	4,229	4,424	5,444	5,955	6,319
Lower Coil Height (in.)	15.0	15.0	25.0	17.5	30.0	17.5	35.0	35.0	25.0
Upper Coil Height (in.)	N/A	N/A	N/A	N/A	N/A	N/A	N/A	N/A	N/A
Length (in.)	20.0	34.0	26.0	40.0	29.0	52.0	32.0	35.0	52.0
Total Face Area (sq ft)	2.1	3.5	4.5	4.9	6.0	6.3	7.8	8.5	9.0

Table 7 — Coil Data (03W-12W) (cont)

39M UNIT SIZE	03W	06W	07T	08W	09T	10W	11T	12T	12W
5/8-in. CHILLED WATER									
Large Face Area									
Nominal Capacity (cfm) at 500 fpm	1,667	2,833	3,521	3,750	4,229	4,875	5,333	6,198	5,958
Lower Coil Height (in.)	24.0	24.0	39.0	27.0	42.0	27.0	48.0	51.0	33.0
Upper Coil Height (in.)	N/A	N/A	N/A	N/A	N/A	N/A	N/A	N/A	N/A
Length (in.)	20.0	34.0	26.0	40.0	29.0	52.0	32.0	35.0	52.0
Total Face Area (sq ft)	3.3	5.7	7.0	7.5	8.5	9.8	10.7	12.4	11.9
Medium Face Area									
Nominal Capacity (cfm) at 500 fpm	1,042	1,771	2,979	2,500	3,625	3,250	4,667	5,104	4,875
Lower Coil Height (in.)	15.0	15.0	33.0	18.0	36.0	18.0	42.0	42.0	27.0
Upper Coil Height (in.)	N/A	N/A	N/A	N/A	N/A	N/A	N/A	N/A	N/A
Length (in.)	20.0	34.0	26.0	40.0	29.0	52.0	32.0	35.0	52.0
Total Face Area (sq ft)	2.1	3.5	6.0	5.0	7.3	6.5	9.3	10.2	9.8
Bypass Face Area (internal Chilled Water Only)									
Nominal Capacity (cfm) at 500 fpm	1,042	1,771	2,167	2,083	2,719	2,708	3,333	4,010	4,333
Lower Coil Height (in.)	15.0	15.0	24.0	15.0	27.0	15.0	30.0	33.0	24.0
Upper Coil Height (in.)	N/A	N/A	N/A	N/A	N/A	N/A	N/A	N/A	N/A
Length (in.)	20.0	34.0	26.0	40.0	29.0	52.0	32.0	35.0	52.0
Total Face Area (sq ft)	2.1	3.5	4.3	4.2	5.4	5.4	6.7	8.0	8.7
5/8-in. HOT WATER HEATING									
Large Face Area									
Nominal Capacity (cfm) at 700 fpm	2,333	3,967	4,929	5,250	5,921	6,825	7,467	8,677	8,342
Lower Coil Height (in.)	24.0	24.0	39.0	27.0	42.0	27.0	48.0	51.0	33.0
Upper Coil Height (in.)	N/A	N/A	N/A	N/A	N/A	N/A	N/A	N/A	N/A
Length (in.)	20.0	34.0	26.0	40.0	29.0	52.0	32.0	35.0	52.0
Total Face Area (sq ft)	3.3	5.7	7.0	7.5	8.5	9.8	10.7	12.4	11.9
Medium Face Area									
Nominal Capacity (cfm) at 700 fpm	1,458	2,479	4,171	3,500	5,075	4,550	6,533	7,146	6,825
Lower Coil Height (in.)	15.0	15.0	33.0	18.0	36.0	18.0	42.0	42.0	27.0
Upper Coil Height (in.)	N/A	N/A	N/A	N/A	N/A	N/A	N/A	N/A	N/A
Length (in.)	20.0	34.0	26.0	40.0	29.0	52.0	32.0	35.0	52.0
Total Face Area (sq ft)	2.1	3.5	6.0	5.0	7.3	6.5	9.3	10.2	9.8

Table 7 — Coil Data (03W-12W) (cont)

39M UNIT SIZE	03W	06W	07T	08W	09T	10W	11T	12T	12W
Small Face Area									
Nominal Capacity (cfm) at 700 fps	—	2,479	2,654	2,917	2,960	3,792	3,733	4,594	3,792
Height (in.)	—	15.0	21.0	15.0	21.0	15.0	24.0	27.0	15.0
Length (in.)	—	34.0	26.0	40.0	29.0	52.0	32.0	35.0	52.0
Total Face Area (sq ft)	—	3.5	3.8	4.2	4.2	5.4	5.3	6.6	5.4
Bypass Face Area (internal)									
Nominal Capacity (cfm) at 700 fpm	1,458	2,479	3,033	2,917	3,806	3,792	4,667	5,615	6,067
Lower Coil Height (in.)	15.0	15.0	24.0	15.0	27.0	15.0	30.0	33.0	24.0
Upper Coil Height (in.)	N/A	N/A	N/A	N/A	N/A	N/A	N/A	N/A	N/A
Length (in.)	20.0	34.0	26.0	40.0	29.0	52.0	32.0	35.0	52.0
Total Face Area (sq ft)	2.1	3.5	4.3	4.2	5.4	5.4	6.7	8.0	8.7
1-in. STEAM HEATING									
Large Face Area									
Nominal Capacity (cfm) at 700 fpm	2,333	3,967	4,929	5,250	5,921	6,825	7,467	8,677	8,342
Lower Coil Height (in.)	24.0	24.0	39.0	27.0	42.0	27.0	48.0	51.0	33.0
Upper Coil Height (in.)	N/A	N/A	N/A	N/A	N/A	N/A	N/A	N/A	N/A
Length (in.)	20.0	34.0	26.0	40.0	29.0	52.0	32.0	35.0	52.0
Total Face Area (sq ft)	3.3	5.7	7.0	7.5	8.5	9.8	10.7	12.4	11.9
Medium Face Area									
Nominal Capacity (cfm) at 700 fpm	1,458	2,479	4,171	3,500	5,075	4,550	6,533	7,146	6,825
Lower Coil Height (in.)	15.0	15.0	33.0	18.0	36.0	18.0	42.0	42.0	27.0
Upper Coil Height (in.)	N/A	N/A	N/A	N/A	N/A	N/A	N/A	N/A	N/A
Length (in.)	20.0	34.0	26.0	40.0	29.0	52.0	32.0	35.0	52.0
Total Face Area (sq ft)	2.1	3.5	6.0	5.0	7.3	6.5	9.3	10.2	9.8
Small Face Area									
Nominal Capacity (cfm) at 700 fpm	—	2,479	2,654	2,917	3,383	3,792	4,200	4,594	3,792
Height (in.)	—	15.0	21.0	15.0	24.0	15.0	27.0	27.0	15.0
Length (in.)	—	34.0	26.0	40.0	29.0	52.0	32.0	35.0	52.0
Total Face Area (sq ft)	—	3.5	3.8	4.2	4.8	5.4	6.0	6.6	5.4
Bypass Face Area (internal)									
Nominal Capacity (cfm) at 700 fpm	1,458	2,479	3,033	2,917	3,806	3,792	4,667	5,615	6,067
Lower Coil Height (in.)	15.0	15.0	24.0	15.0	27.0	15.0	30.0	33.0	24.0
Upper Coil Height (in.)	N/A	N/A	N/A	N/A	N/A	N/A	N/A	N/A	N/A
Length (in.)	20.0	34.0	26.0	40.0	29.0	52.0	32.0	35.0	52.0
Total Face Area (sq ft)	2.1	3.5	4.3	4.2	5.4	5.4	6.7	8.0	8.7
5/8-in. HOT WATER INTEGRAL FACE AND BYPASS									
Nominal Capacity (cfm)	—	3,000	3,500	4,000	4,500	5,000	5,500	6,000	6,000
Coil Height (in.)	—	22.9	45.9	30.6	45.9	30.6	53.6	53.6	30.6
Length (in.)	—	33.0	26.0	39.0	29.0	48.0	32.0	35.0	48.0
Total Face Area (sq ft)	—	3.3	5.0	5.7	5.9	7.4	8.0	9.0	7.4
5/8-in. STEAM INTEGRAL FACE AND BYPASS									
Nominal Capacity (cfm)	—	3,000	3,500	4,000	4,500	5,000	5,500	6,000	6,000
Coil Height (in.)	—	22.90	45.9	30.6	45.9	30.6	53.6	53.6	30.6
Length (in.)	—	33.0	26.0	39.0	29.0	48.0	32.0	35.0	48.0
Total Face Area (sq ft)	—	3.3	5.0	5.7	5.9	7.4	8.0	9.0	7.4

Table 8 — Coil Data (14W-25T)

39M UNIT SIZE	14W	16T	17W	18T	21W	22T	25W	25T
1/2-in. CHILLED WATER/DIRECT EXPANSION								
Large Face Area								
Nominal Capacity (cfm) at 500 fpm	7,170	7,587	8,464	8,898	10,720	11,016	12,205	12,335
Lower Coil Height (in.)	35.0	30.0	37.5	32.5	47.5	35.0	47.5	37.5
Upper Coil Height (in.)	N/A	27.5	N/A	30.0	N/A	32.5	N/A	35.0
Length (in.)	59.0	38.0	65.0	41.0	65.0	47.0	74.0	49.0
Total Face Area (sq ft)	14.3	15.2	16.9	17.8	21.4	22.0	24.4	24.7
Medium Face Area								
Nominal Capacity (cfm) at 500 fpm	6,146	5,938	6,771	7,474	9,028	8,976	10,278	9,358
Lower Coil Height (in.)	30.0	45.0	30.0	52.5	40.0	55.0	40.0	55.0
Upper Coil Height (in.)	N/A	N/A	N/A	N/A	N/A	N/A	N/A	N/A
Length (in.)	59.0	38.0	65.0	41.0	65.0	47.0	74.0	49.0
Total Face Area (sq ft)	12.3	11.9	13.5	14.9	18.1	18.0	20.6	18.7
Bypass Face Area (Internal Chilled Water Only)								
Nominal Capacity (cfm) at 500 fpm	5,122	4,948	6,207	5,694	7,899	6,936	8,993	8,082
Lower Coil Height (in.)	25.0	37.5	27.5	40.0	35.0	42.5	35.0	47.5
Upper Coil Height (in.)	N/A	N/A	N/A	N/A	N/A	N/A	N/A	N/A
Length (in.)	59.0	38.0	65.0	41.0	65.0	47.0	74.0	49.0
Total Face Area (sq ft)	10.2	9.9	12.4	11.4	15.8	13.9	18.0	16.2
1/2-in. HOT WATER HEATING								
Large Face Area								
Nominal Capacity (cfm) at 700 fpm	10,038	10,622	11,849	12,457	15,009	15,422	17,087	17,269
Lower Coil Height (in.)	35.0	30.0	37.5	32.5	47.5	35.0	47.5	37.5
Upper Coil Height (in.)	N/A	27.5	N/A	30.0	N/A	32.5	N/A	35.0
Length (in.)	59.0	38.0	65.0	41.0	65.0	47.0	74.0	49.0
Total Face Area (sq ft)	14.3	15.2	16.9	17.8	21.4	22.0	24.4	24.7
Medium Face Area								
Nominal Capacity (cfm) at 700 fpm	8,604	8,313	9,479	10,464	12,639	12,566	14,389	13,101
Lower Coil Height (in.)	30.0	45.0	30.0	52.5	40.0	55.0	40.0	55.0
Upper Coil Height (in.)	N/A	N/A	N/A	N/A	N/A	N/A	N/A	N/A
Length (in.)	59.0	38.0	65.0	41.0	65.0	47.0	74.0	49.0
Total Face Area (sq ft)	12.3	11.9	13.5	14.9	18.1	18.0	20.6	18.7
Small Face Area								
Nominal Capacity (cfm) at 700 fpm	5,019	5,542	6,319	6,477	7,109	7,425	8,094	7,741
Height (in.)	17.5	30.0	20.0	32.5	22.5	32.5	22.5	32.5
Length (in.)	59.0	38.0	65.0	41.0	65.0	47.0	74.0	49.0
Total Face Area (sq ft)	7.2	7.9	9.0	9.3	10.2	10.6	11.6	11.1
Bypass Face Area (Internal)								
Nominal Capacity (cfm) at 700 fpm	7,170	6,927	8,689	7,972	11,059	9,710	12,590	11,314
Lower Coil Height (in.)	25.0	37.5	27.5	40.0	35.0	42.5	35.0	47.5
Upper Coil Height (in.)	N/A	N/A	N/A	N/A	N/A	N/A	N/A	N/A
Length (in.)	59.0	38.0	65.0	41.0	65.0	47.0	74.0	49.0
Total Face Area (sq ft)	10.2	9.9	12.4	11.4	15.8	13.9	18.0	16.2

Table 8 — Coil Data (14W-25T) (cont)

39M UNIT SIZE	14W	16T	17W	18T	21W	22T	25W	25T
5/8-in. CHILLED WATER								
Large Face Area								
Nominal Capacity (cfm) at 500 fpm	6,760	7,917	8,125	8,969	10,156	10,771	11,563	12,760
Lower Coil Height (in.)	33.0	60.0	36.0	63.0	45.0	66.0	45.0	75.0
Upper Coil Height (in.)	N/A	N/A	N/A	N/A	N/A	N/A	N/A	N/A
Length (in.)	59.0	38.0	65.0	41.0	65.0	47.0	74.0	49.0
Total Face Area (sq ft)	13.5	15.8	16.3	17.9	20.3	21.5	23.1	25.5
Medium Face Area								
Nominal Capacity (cfm) at 500 fpm	6,146	6,333	6,771	7,260	8,802	8,813	10,021	10,208
Lower Coil Height (in.)	30.0	48.0	30.0	51.0	39.0	54.0	39.0	60.0
Upper Coil Height (in.)	N/A	N/A	N/A	N/A	N/A	N/A	N/A	N/A
Length (in.)	59.0	38.0	65.0	41.0	65.0	47.0	74.0	49.0
Total Face Area (sq ft)	12.3	12.7	13.5	14.5	17.6	17.6	20.0	20.4
Bypass Face Area (internal Chilled Water Only)								
Nominal Capacity (cfm) at 500 fpm	4,917	5,146	6,094	5,552	7,448	6,854	8,479	8,167
Lower Coil Height (in.)	24.0	39.0	27.0	39.0	33.0	42.0	33.0	48.0
Upper Coil Height (in.)	N/A	N/A	N/A	N/A	N/A	N/A	N/A	N/A
Length (in.)	59.0	38.0	65.0	41.0	65.0	47.0	74.0	49.0
Total Face Area (sq ft)	9.8	10.3	12.2	11.1	14.9	13.7	17.0	16.3

Table 8 — Coil Data (14W-25T) (cont)

39M UNIT SIZE	14W	16T	17W	18T	21W	22T	25W	25T
5/8-in. HOT WATER HEATING								
Large Face Area								
Nominal Capacity (cfm) at 700 fpm	9,465	11,083	11,375	12,556	14,219	15,079	16,188	17,865
Lower Coil Height (in.)	33.0	60.0	36.0	63.0	45.0	66.0	45.0	75.0
Upper Coil Height (in.)	N/A	N/A	N/A	N/A	N/A	N/A	N/A	N/A
Length (in.)	59.0	38.0	65.0	41.0	65.0	47.0	74.0	49.0
Total Face Area (sq ft)	13.5	15.8	16.3	17.9	20.3	21.5	23.1	25.5
Medium Face Area								
Nominal Capacity (cfm) at 700 fpm	8,604	8,867	9,479	10,165	12,323	12,338	14,029	14,292
Lower Coil Height (in.)	30.0	48.0	30.0	51.0	39.0	54.0	39.0	60.0
Upper Coil Height (in.)	N/A	N/A	N/A	N/A	N/A	N/A	N/A	N/A
Length (in.)	59.0	38.0	65.0	41.0	65.0	47.0	74.0	49.0
Total Face Area (sq ft)	12.3	12.7	13.5	14.5	17.6	17.6	20.0	20.4
Small Face Area								
Nominal Capacity (cfm) at 700 fpm	4,302	5,542	5,688	6,577	6,635	8,225	7,554	9,290
Height (in.)	15.0	30.0	18.0	33.0	21.0	36.0	21.0	39.0
Length (in.)	59.0	38.0	65.0	41.0	65.0	47.0	74.0	49.0
Total Face Area (sq ft)	6.1	7.9	8.1	9.4	9.5	11.8	10.8	13.3
Bypass Face Area (internal)								
Nominal Capacity (cfm) at 700 fpm	6,883	7,204	8,531	7,773	10,427	9,596	11,871	11,433
Lower Coil Height (in.)	24.0	39.0	27.0	39.0	33.0	42.0	33.0	48.0
Upper Coil Height (in.)	N/A	N/A	N/A	N/A	N/A	N/A	N/A	N/A
Length (in.)	59.0	38.0	65.0	41.0	65.0	47.0	74.0	49.0
Total Face Area (sq ft)	9.8	10.3	12.2	11.1	14.9	13.7	17.0	16.3
1-in. STEAM HEATING								
Large Face Area								
Nominal Capacity (cfm) at 700 fpm	9,465	11,083	11,375	12,556	14,219	15,079	16,188	17,150
Lower Coil Height (in.)	33.0	60.0	36.0	63.0	45.0	66.0	45.0	36.0
Upper Coil Height (in.)	N/A	N/A	N/A	N/A	N/A	N/A	N/A	36.0
Length (in.)	59.0	38.0	65.0	41.0	65.0	47.0	74.0	49.0
Total Face Area (sq ft)	13.5	15.8	16.3	17.9	20.3	21.5	23.1	24.5
Medium Face Area								
Nominal Capacity (cfm) at 700 fpm	8,604	8,867	9,479	10,165	12,323	12,338	14,029	14,292
Lower Coil Height (in.)	30.0	48.0	30.0	51.0	39.0	54.0	39.0	60.0
Upper Coil Height (in.)	N/A	N/A	N/A	N/A	N/A	N/A	N/A	N/A
Length (in.)	59.0	38.0	65.0	41.0	65.0	47.0	74.0	49.0
Total Face Area (sq ft)	12.3	12.7	13.5	14.5	17.6	17.6	20.0	20.4
Small Face Area								
Nominal Capacity (cfm) at 700 fpm	4,302	5,542	5,688	6,577	6,635	8,225	7,554	9,290
Height (in.)	15.0	30.0	18.0	33.0	21.0	36.0	21.0	39.0
Length (in.)	59.0	38.0	65.0	41.0	65.0	47.0	74.0	49.0
Total Face Area (sq ft)	6.1	7.9	8.1	9.4	9.5	11.8	10.8	13.3
Bypass Face Area (Internal)								
Nominal Capacity (cfm) at 700 fpm	6,883	7,204	8,531	7,773	10,427	9,596	11,871	11,433
Lower Coil Height (in.)	24.0	39.0	27.0	39.0	33.0	42.0	33.0	48.0
Upper Coil Height (in.)	N/A	N/A	N/A	N/A	N/A	N/A	N/A	N/A
Length (in.)	59.0	38.0	65.0	41.0	65.0	47.0	74.0	49.0
Total Face Area (sq ft)	9.8	10.3	12.2	11.1	14.9	13.7	17.0	16.3

Table 8 — Coil Data (14W-25T) (cont)

39M UNIT SIZE	14W	16T	17W	18T	21W	22T	25W	25T
5/8-in. Hot Water Integral Face and Bypass								
Nominal Capacity (cfm)	7,000	7,500	8,500	8,500	10,500	11,000	12,500	12,500
Coil Height (in.)	30.6	65.0	39.0	68.0	48.0	74.0	48.0	79.0
Length (in.)	54.0	26.4	59.4	26.4	59.4	37.4	59.4	37.4
Total Face Area (sq ft)	8.5	7.6	9.2	8.1	12.6	13.5	12.6	14.7
5/8-in. Steam Integral Face and Bypass								
Nominal Capacity (cfm)	7,000	7,500	8,500	8,500	10,500	11,000	12,500	12,500
Coil Height (in.)	30.6	65.0	39.0	68.0	48.0	74.0	48.0	79.0
Length (in.)	54.0	26.4	59.4	26.4	59.4	37.4	59.4	37.4
Total Face Area (sq ft)	8.5	7.6	9.2	8.1	12.6	13.5	12.6	14.7

Table 9 — Coil Data (30W-51T)

39M UNIT SIZE	30W	30T	35T	36W	37T	40W	42T	50W	51T
1/2-in. CHILLED WATER/DIRECT EXPANSION									
Large Face Area									
Nominal Capacity (cfm) at 500 fpm	15,174	14,852	17,448	18,333	18,438	20,000	20,938	25,278	25,313
Lower Coil Height (in.)	47.5	37.5	37.5	55.0	45.0	30.0	45.0	35.0	45.0
Upper Coil Height (in.)	N/A	35.0	37.5	N/A	45.0	30.0	45.0	35.0	45.0
Length (in.)	92.0	59.0	67.0	96.0	59.0	96.0	67.0	104.0	81.0
Total Face Area (sq ft)	30.3	29.7	34.9	36.7	36.9	40.0	41.9	50.6	50.6
Medium Face Area									
Nominal Capacity (cfm) at 500 fpm	12,778	11,267	13,958	15,000	15,365	18,333	17,448	19,861	21,094
Lower Coil Height (in.)	40.0	55.0	30.0	45.0	37.5	55.0	37.5	55.0	37.5
Upper Coil Height (in.)	N/A	N/A	30.0	N/A	37.5	n/a	37.5	n/a	37.5
Length (in.)	92.0	59.0	67.0	96.0	59.0	96.0	67.0	104.0	81.0
Total Face Area (sq ft)	25.6	22.5	27.9	30.0	30.7	36.7	34.9	39.7	42.2
Bypass Face Area (Internal Chilled Water Only)									
Nominal Capacity (cfm) at 500 fpm	11,181	9,731	11,632	12,500	12,292	15,000	13,377	16,250	16,172
Lower Coil Height (in.)	35.0	47.5	50.0	37.5	30.0	45.0	30.0	45.0	30.0
Upper Coil Height (in.)	N/A	N/A	N/A	N/A	30.0	N/A	27.5	N/A	27.5
Length (in.)	92.0	59.0	67.0	96.0	59.0	96.0	67.0	104.0	81.0
Total Face Area (sq ft)	22.4	19.5	23.3	25.0	24.6	30.0	26.8	32.5	32.3
1/2-in. HOT WATER HEATING									
Large Face Area									
Nominal Capacity (cfm) at 700 fpm	21,243	20,793	24,427	25,667	25,813	28,000	29,313	35,389	35,438
Lower Coil Height (in.)	47.5	37.5	37.5	55.0	45.0	30.0	45.0	35.0	45.0
Upper Coil Height (in.)	N/A	35.0	37.5	N/A	45.0	30.0	45.0	35.0	45.0
Length (in.)	92.0	59.0	67.0	96.0	59.0	96.0	67.0	104.0	81.0
Total Face Area (sq ft)	30.3	29.7	34.9	36.7	36.9	40.0	41.9	50.6	50.6
Medium Face Area									
Nominal Capacity (cfm) at 700 fpm	17,889	15,774	19,542	21,000	21,510	25,667	24,427	27,806	29,531
Lower Coil Height (in.)	40.0	55.0	30.0	45.0	37.5	55.0	37.5	55.0	37.5
Upper Coil Height (in.)	N/A	N/A	30.0	N/A	37.5	n/a	37.5	n/a	37.5
Length (in.)	92.0	59.0	67.0	96.0	59.0	96.0	67.0	104.0	81.0
Total Face Area (sq ft)	25.6	22.5	27.9	30.0	30.7	36.7	34.9	39.7	42.2
Small Face Area									
Nominal Capacity (cfm) at 700 fpm	10,063	9,321	13,842	14,000	13,623	14,000	16,285	17,694	14,766
Height (in.)	22.5	32.5	42.5	30.0	47.5	30.0	50.0	35.0	38.0
Length (in.)	92.0	59.0	67.0	96.0	59.0	96.0	67.0	104.0	81.0
Total Face Area (sq ft)	14.4	13.3	19.8	20.0	19.5	20.0	23.3	25.3	21.1
Bypass Face Area (internal)									
Nominal Capacity (cfm) at 700 fpm	15,653	13,623	16,285	17,500	17,208	21,000	18,727	22,750	22,641
Lower Coil Height (in.)	35.0	47.5	50.0	37.5	30.0	45.0	30.0	45.0	30.0
Upper Coil Height (in.)	N/A	N/A	N/A	N/A	30.0	n/a	27.5	n/a	27.5
Length (in.)	92.0	59.0	67.0	96.0	59.0	96.0	67.0	104.0	81.0
Total Face Area (sq ft)	22.4	19.5	23.3	25.0	24.6	30.0	26.8	32.5	32.3

Table 9 — Coil Data (30W-51T) (cont)

39M UNIT SIZE	30W	30T	35T	36W	37T	40W	42T	50W	51T
5/8-in. CHILLED WATER									
Large Face Area									
Nominal Capacity (cfm) at 500 fpm	14,375	15,365	18,146	18,000	18,438	20,000	20,938	24,917	25,313
Lower Coil Height (in.)	45.0	75.0	78.0	54.0	45.0	30.0	45.0	36.0	45.0
Upper Coil Height (in.)	N/A	N/A	N/A	N/A	45.0	30.0	45.0	33.0	45.0
Length (in.)	92.0	59.0	67.0	96.0	59.0	96.0	67.0	104.0	81.0
Total Face Area (sq ft)	28.8	30.7	36.3	36.0	36.9	40.0	41.9	49.8	50.6
Medium Face Area									
Nominal Capacity (cfm) at 500 fpm	12,458	12,292	14,656	15,000	15,979	18,000	18,146	19,500	21,938
Lower Coil Height (in.)	39.0	60.0	63.0	45.0	39.0	54.0	39.0	54.0	39.0
Upper Coil Height (in.)	N/A	N/A	N/A	N/A	39.0	N/A	39.0	N/A	39.0
Length (in.)	92.0	59.0	67.0	96.0	59.0	96.0	67.0	104.0	81.0
Total Face Area (sq ft)	24.9	24.6	29.3	30.0	32.0	36.0	36.3	39.0	43.9
Bypass Face Area (Internal Chilled Water Only)									
Nominal Capacity (cfm) at 500 fpm	10,542	9,833	11,865	12,000	12,292	15,000	13,958	16,250	16,875
Lower Coil Height (in.)	33.0	48.0	51.0	36.0	60.0	45.0	30.0	45.0	30.0
Upper Coil Height (in.)	N/A	N/A	N/A	N/A	N/A	N/A	30.0	N/A	30.0
Length (in.)	92.0	59.0	67.0	96.0	59.0	96.0	67.0	104.0	81.0
Total Face Area (sq ft)	21.1	19.7	23.7	24.0	24.6	30.0	27.9	32.5	33.8
5/8-in. HOT WATER HEATING									
Large Face Area									
Nominal Capacity (cfm) at 700 fpm	20,125	21,510	25,404	25,200	25,813	28,000	29,313	34,883	35,438
Lower Coil Height (in.)	45.0	75.0	78.0	54.0	45.0	30.0	45.0	36.0	45.0
Upper Coil Height (in.)	N/A	N/A	N/A	N/A	45.0	30.0	45.0	33.0	45.0
Length (in.)	92.0	59.0	67.0	96.0	59.0	96.0	67.0	104.0	81.0
Total Face Area (sq ft)	28.8	30.7	36.3	36.0	36.9	40.0	41.9	49.8	50.6
Medium Face Area									
Nominal Capacity (cfm) at 700 fpm	17,442	17,208	20,519	21,000	22,371	25,200	25,404	27,300	30,713
Lower Coil Height (in.)	39.0	60.0	63.0	45.0	39.0	54.0	39.0	54.0	39.0
Upper Coil Height (in.)	N/A	N/A	N/A	N/A	39.0	N/A	39.0	N/A	39.0
Length (in.)	92.0	59.0	67.0	96.0	59.0	96.0	67.0	104.0	81.0
Total Face Area (sq ft)	24.9	24.6	29.3	30.0	32.0	36.0	36.3	39.0	43.9
Small Face Area									
Nominal Capacity (cfm) at 700 fpm	9,392	11,185	12,702	14,000	14,627	14,000	15,633	16,683	17,719
Height (in.)	21.0	39.0	39.0	30.0	51.0	30.0	48.0	33.0	45.0
Length (in.)	92.0	59.0	67.0	96.0	59.0	96.0	67.0	104.0	81.0
Total Face Area (sq ft)	13.4	16.0	18.1	20.0	20.9	20.0	22.3	23.8	25.3
Bypass Face Area (internal)									
Nominal Capacity (cfm) at 700 fpm	14,758	13,767	16,610	16,800	17,208	21,000	19,542	22,750	23,625
Lower Coil Height (in.)	33.0	48.0	51.0	36.0	60.0	45.0	30.0	45.0	30.0
Upper Coil Height (in.)	N/A	N/A	N/A	N/A	N/A	N/A	30.0	N/A	30.0
Length (in.)	92.0	59.0	67.0	96.0	59.0	96.0	67.0	104.0	81.0
Total Face Area (sq ft)	21.1	19.7	23.7	24.0	24.6	30.0	27.9	32.5	33.8

Table 9 — Coil Data (30W-51T) (cont)

39M UNIT SIZE	30W	30T	35T	36W	37T	40W	42T	50W	51T
1-in. STEAM HEATING									
Large Face Area									
Nominal Capacity (cfm) at 700 fpm	20,125	20,650	24,427	25,200	25,813	28,000	29,313	34,883	35,438
Lower Coil Height (in.)	45.0	36.0	39.0	54.0	45.0	30.0	45.0	36.0	45.0
Upper Coil Height (in.)	N/A	36.0	36.0	N/A	45.0	30.0	45.0	33.0	45.0
Length (in.)	92.0	59.0	67.0	96.0	59.0	96.0	67.0	104.0	81.0
Total Face Area (sq ft)	28.8	29.5	34.9	36.0	36.9	40.0	41.9	49.8	50.6
Medium Face Area									
Nominal Capacity (cfm) at 700 fpm	17,442	17,208	20,519	21,000	22,371	25,200	25,404	27,300	30,713
Lower Coil Height (in.)	39.0	60.0	63.0	45.0	39.0	54.0	39.0	54.0	39.0
Upper Coil Height (in.)	N/A	N/A	N/A	N/A	39.0	N/A	39.0	N/A	39.0
Length (in.)	92.0	59.0	67.0	96.0	59.0	96.0	67.0	104.0	81.0
Total Face Area (sq ft)	24.9	24.6	29.3	30.0	32.0	36.0	36.3	39.0	43.9
Small Face Area									
Nominal Capacity (cfm) at 700 fpm	9,392	11,185	13,679	14,000	13,767	14,000	15,633	16,683	17,719
Height (in.)	21.0	39.0	42.0	30.0	48.0	30.0	48.0	33.0	45.0
Length (in.)	92.0	59.0	67.0	96.0	59.0	96.0	67.0	104.0	81.0
Total Face Area (sq ft)	13.4	16.0	19.5	20.0	19.7	20.0	22.3	23.8	25.3
Bypass Face Area (internal)									
Nominal Capacity (cfm) at 700 fpm	14,758	13,767	16,610	16,800	17,208	21,000	19,542	22,750	23,625
Lower Coil Height (in.)	33.0	48.0	51.0	36.0	60.0	45.0	30.0	45.0	30.0
Upper Coil Height (in.)	N/A	N/A	N/A	N/A	N/A	N/A	30.0	N/A	30.0
Length (in.)	92.0	59.0	67.0	96.0	59.0	96.0	67.0	104.0	81.0
Total Face Area (sq ft)	21.1	19.7	23.7	24.0	24.6	30.0	27.9	32.5	33.8
5/8-in. HOT WATER INTEGRAL FACE AND BYPASS									
Nominal Capacity (cfm)	15,000	15,000	18,000	18,000	18,500	20,000	21,500	25,000	25,500
Coil Height (in.)	48.0	79.0	82.0	60.0	98.0	66.0	97.0	75.0	97.0
Length (in.)	81.4	48.4	59.4	81.4	48.4	81.4	59.4	92.4	70.4
Total Face Area (sq ft)	17.6	19.6	25.6	24.1	25.4	27.3	31.3	36.7	37.6
5/8-in. STEAM INTEGRAL FACE AND BYPASS									
Nominal Capacity (cfm)	15,000	15,000	18,000	18,000	18,500	20,000	21,500	25,000	25,500
Coil Height (in.)	48.0	79.0	82.0	60.0	98.0	66.0	97.0	75.0	97.0
Length (in.)	81.38	48.4	59.4	81.4	48.4	81.4	59.4	92.4	70.4
Total Face Area (sq ft)	17.6	19.6	25.6	24.1	25.4	27.3	31.3	36.7	37.6

Table 10 — Coil Data (58T-110W)

39M UNIT SIZE	58T	61W	72W	85W	96W	110W
1/2-in. CHILLED WATER/DIRECT EXPANSION						
Large Face Area						
Nominal Capacity (cfm) at 500 fpm	28,828	30,694	36,224	42,656	48,125	55,000
Lower Coil Height (in.)	52.5	42.5	50.0	50.0	55.0	55.0
Upper Coil Height (in.)	50.0	42.5	47.5	47.5	55.0	55.0
Length (in.)	81.0	104.0	107.0	126.0	126.0	144.0
Total Face Area (sq ft)	57.7	61.4	72.4	85.3	96.3	110.0
Medium Face Area						
Nominal Capacity (cfm) at 500 fpm	23,906	25,278	29,722	35,000	39,375	45,000
Lower Coil Height (in.)	42.5	35.0	40.0	40.0	45.0	45.0
Upper Coil Height (in.)	42.5	35.0	40.0	40.0	45.0	45.0
Length (in.)	81.0	104.0	107.0	126.0	126.0	144.0
Total Face Area (sq ft)	47.8	50.6	59.4	70.0	78.8	90.0
Bypass Face Area (Internal Chilled Water Only)						
Nominal Capacity (cfm) at 500 fpm	18,984	19,861	23,220	27,344	30,625	35,000
Lower Coil Height (in.)	35.0	55.0	32.5	32.5	35.0	35.0
Upper Coil Height (in.)	32.5	N/A	30.0	30.0	35.0	35.0
Length (in.)	81.0	104.0	107.0	126.0	126.0	144.0
Total Face Area (sq ft)	38.0	39.7	46.4	54.7	61.3	70.0
1/2-in. HOT WATER HEATING						
Large Face Area						
Nominal Capacity (cfm) at 700 fpm	40,359	42,972	50,714	59,719	67,375	77,000
Lower Coil Height (in.)	52.5	42.5	50.0	50.0	55.0	55.0
Upper Coil Height (in.)	50.0	42.5	47.5	47.5	55.0	55.0
Length (in.)	81.0	104.0	107.0	126.0	126.0	144.0
Total Face Area (sq ft)	57.7	61.4	72.4	85.3	96.3	110.0
Medium Face Area						
Nominal Capacity (cfm) at 700 fpm	33,469	35,389	41,611	49,000	55,125	63,000
Lower Coil Height (in.)	42.5	35.0	40.0	40.0	45.0	45.0
Upper Coil Height (in.)	42.5	35.0	40.0	40.0	45.0	45.0
Length (in.)	81.0	104.0	107.0	126.0	126.0	144.0
Total Face Area (sq ft)	47.8	50.6	59.4	70.0	78.8	90.0
Small Face Area						
Nominal Capacity (cfm) at 700 fpm	20,672	21,486	—	—	—	—
Height (in.)	52.5	42.5	—	—	—	—
Length (in.)	81.0	104.0	—	—	—	—
Total Face Area (sq ft)	29.5	30.7	—	—	—	—
Bypass Face Area (internal)						
Nominal Capacity (cfm) at 700 fpm	26,578	27,806	32,509	38,281	42,875	49,000
Lower Coil Height (in.)	35.0	55.0	32.5	32.5	35.0	35.0
Upper Coil Height (in.)	32.5	n/a	30.0	30.0	35.0	35.0
Length (in.)	81.0	104.0	107.0	126.0	126.0	144.0
Total Face Area (sq ft)	38.0	39.7	46.4	54.7	61.3	70.0

Table 10 — Coil Data (58T-110W) (cont)

39M UNIT SIZE	58T	61W	72W	85W	96W	110W
5/8-in. CHILLED WATER						
Large Face Area						
Nominal Capacity (cfm) at 500 fpm	28,688	30,333	35,667	42,000	47,250	54,000
Lower Coil Height (in.)	51.0	42.0	48.0	48.0	54.0	54.0
Upper Coil Height (in.)	51.0	42.0	48.0	48.0	54.0	54.0
Length (in.)	81.0	104.0	107.0	126.0	126.0	144.0
Total Face Area (sq ft)	57.4	60.7	71.3	84.0	94.5	108.0
Medium Face Area						
Nominal Capacity (cfm) at 500 fpm	24,469	24,917	28,979	34,125	38,063	43,500
Lower Coil Height (in.)	42.0	36.0	39.0	39.0	45.0	45.0
Upper Coil Height (in.)	45.0	33.0	39.0	39.0	42.0	42.0
Length (in.)	81.0	104.0	107.0	126.0	126.0	144.0
Total Face Area (sq ft)	48.9	49.8	58.0	68.3	76.1	87.0
Bypass Face Area (internal Chilled Water Only)						
Nominal Capacity (cfm) at 500 fpm	18,563	19,500	23,406	27,563	31,500	36,000
Lower Coil Height (in.)	33.0	54.0	33.0	33.0	36.0	36.0
Upper Coil Height (in.)	33.0	N/A	30.0	30.0	36.0	36.0
Length (in.)	81.0	104.0	107.0	126.0	126.0	144.0
Total Face Area (sq ft)	37.1	39.0	46.8	55.1	63.0	72.0
5/8-in. HOT WATER HEATING						
Large Face Area						
Nominal Capacity (cfm) at 700 fpm	40,163	42,467	49,933	58,800	66,150	75,600
Lower Coil Height (in.)	51.0	42.0	48.0	48.0	54.0	54.0
Upper Coil Height (in.)	51.0	42.0	48.0	48.0	54.0	54.0
Length (in.)	81.0	104.0	107.0	126.0	126.0	144.0
Total Face Area (sq ft)	57.4	60.7	71.3	84.0	94.5	108.0
Medium Face Area						
Nominal Capacity (cfm) at 700 fpm	34,256	34,883	40,571	47,775	53,288	60,900
Lower Coil Height (in.)	42.0	36.0	39.0	39.0	45.0	45.0
Upper Coil Height (in.)	45.0	33.0	39.0	39.0	42.0	42.0
Length (in.)	81.0	104.0	107.0	126.0	126.0	144.0
Total Face Area (sq ft)	48.9	49.8	58.0	68.3	76.1	87.0
Small Face Area						
Nominal Capacity (cfm) at 700 fpm	21,263	21,233	—	—	—	—
Height (in.)	54.0	42.0	—	—	—	—
Length (in.)	81.0	104.0	—	—	—	—
Total Face Area (sq ft)	30.4	30.3	—	—	—	—
Bypass Face Area (internal)						
Nominal Capacity (cfm) at 700 fpm	25,988	27,300	32,769	38,588	44,100	50,400
Lower Coil Height (in.)	33.0	54.0	33.0	33.0	36.0	36.0
Upper Coil Height (in.)	33.0	N/A	30.0	30.0	36.0	36.0
Length (in.)	81.0	104.0	107.0	126.0	126.0	144.0
Total Face Area (sq ft)	37.1	39.0	46.8	55.1	63.0	72.0

Table 10 — Coil Data (58T-110W) (cont)

39M UNIT SIZE	58T	61W	72W	85W	96W	110W
1-in. STEAM HEATING						
Large Face Area						
Nominal Capacity (cfm) at 700 fpm	40,163	42,467	49,933	58,800	66,150	75,600
Lower Coil Height (in.)	51.0	42.0	48.0	48.0	54.0	54.0
Upper Coil Height (in.)	51.0	42.0	48.0	48.0	54.0	54.0
Length (in.)	81.0	104.0	107.0	126.0	126.0	144.0
Total Face Area (sq ft)	57.4	60.7	71.3	84.0	94.5	108.0
Medium Face Area						
Nominal Capacity (cfm) at 700 fpm	34,256	34,883	40,571	47,775	53,288	60,900
Lower Coil Height (in.)	45.0	36.0	39.0	39.0	45.0	45.0
Upper Coil Height (in.)	42.0	33.0	39.0	39.0	42.0	42.0
Length (in.)	81.0	104.0	107.0	126.0	126.0	144.0
Total Face Area (sq ft)	48.9	49.8	58.0	68.3	76.1	87.0
Small Face Area						
Nominal Capacity (cfm) at 700 fpm	21,263	21,233	—	—	—	—
Height (in.)	54.0	42.0	—	—	—	—
Length (in.)	81.0	104.0	—	—	—	—
Total Face Area (sq ft)	30.4	30.3	—	—	—	—
Bypass Face Area (internal)						
Nominal Capacity (cfm) at 700 fpm	25,988	27,300	32,769	38,588	44,100	50,400
Lower Coil Height (in.)	33.0	54.0	33.0	33.0	36.0	36.0
Upper Coil Height (in.)	33.0	N/A	30.0	30.0	36.0	36.0
Length (in.)	81.0	104.0	107.0	126.0	126.0	144.0
Total Face Area (sq ft)	37.1	39.0	46.8	55.1	63.0	72.0
5/8-in. HOT WATER INTEGRAL FACE AND BYPASS						
Nominal Capacity (cfm)	29,000	30,500	36,000	42,500	48,000	55,000
Coil Height (in.)	110.0	90.0	102.0	102.0	111.0	111.0
Length (in.)	70.4	92.4	92.4	114.4	114.4	136.4
Total Face Area (sq ft)	43.5	45.8	53.2	66.5	73.3	88.0
5/8-in. STEAM INTEGRAL FACE AND BYPASS						
Nominal Capacity (cfm)	29,000	30,500	36,000	42,500	48,000	55,000
Coil Height (in.)	110.0	90.0	102.0	102.0	111.0	111.0
Length (in.)	70.4	92.38	92.4	114.4	114.4	136.4
Total Face Area (sq ft)	43.5	45.8	53.2	66.5	73.3	88.0

Table 11 — Direct-Expansion Circuiting Data

Medium Face Area Coils

39M UNIT SIZE	03W		06W			07T				08W			09T				10W		
CIRCUITING TYPE	Quarter	Half	Quarter	Half	Full	Quarter	Half	Full	Double	Quarter	Half	Full	Quarter	Half	Full	Double	Quarter	Half	Full
Airflow (cfm) at 500 fpm	1,215		2,066			2,708				2,778			3,524				3,611		
Total Face Area (sq ft)	2.4		4.1			5.4				5.6			7.0				7.2		
Tubes in Face	14	14	14	14	14	24	24	24	24	16	16	16	28	28	28	28	16	16	16
Tube Length (in.)	20	20	34	34	34	26	26	26	26	40	40	40	29	29	29	29	52	52	52
No. of Circuits - Total	4	7	4	7	14	6	12	24	48	4	8	16	7	14	28	56	4	8	16
4-Row Coil																			
Face Split Coils																			
No. of TXVs	2	2	2	2	—	2	2	2	—	2	2	—	2	2	2	—	2	2	—
Suction Connections (in. OD)	7/8	7/8	7/8	7/8	—	7/8	1-1/8	1-3/8	—	7/8	7/8	—	7/8	1-1/8	1-5/8	—	7/8	7/8	—
Distributor Connections (in. OD)	7/8	7/8	7/8	7/8	—	7/8	7/8	1-3/8	—	7/8	7/8	—	7/8	7/8	1-3/8	—	7/8	7/8	
Distributor Nozzle Size*	G-1.5	G-2.5/ G-2	G-1.5	G-2.5/ G-2	—	G-2	G-4	C-12	—	G-1.5	G-2.5	—	G-2.5/ G-2	G-6	C-15	—	G-1.5	G-2.5	—
Intertwined Row Split Coils																			
No. of TXVs	2	2	2	2	—	2	2	2	—	2	2	—	2	2	2	—	2	2	—
Suction Connections (in. OD)	7/8	7/8	7/8	7/8	—	7/8	1-1/8	1-3/8	—	7/8	7/8	—	7/8	1-1/8	1-5/8	—	7/8	7/8	—
Distributor Connections (in. OD)	7/8	7/8	7/8	7/8	—	7/8	7/8	1-3/8	—	7/8	7/8	—	7/8	7/8	1-3/8	—	7/8	7/8	—
Distributor Nozzle Size*	G-1.5	G-2.5/ G-2	G-1.5	G-2.5/ G-2	—	G-2	G-4	C-12	—	G-1.5	G-2.5	—	G-2.5/ G-2	G-6	C-15	—	G-1.5	G-2.5	—
Single Circuit Coils																			
No. of TXVs	1	1	1	1	—	1	1	—	—	1	1	—	1	1	—	—	1	1	—
Suction Connections (in. OD)	7/8	1-1/8	7/8	1-1/8	—	1-1/8	1-3/8	—	—	7/8	1-1/8	—	1-1/8	1-5/8	—	—	7/8	1-1/8	—
Distributor Connections (in. OD)	7/8	7/8	7/8	7/8	—	7/8	1-3/8	—	—	7/8	7/8	—	7/8	1-3/8	—	—	7/8	7/8	—
Distributor Nozzle Size	G-2.5	G-6	G-2.5	G-6	—	G-4	C-12	—	—	G-2.5	G-8	—	G-6	C-15	—	—	G-2.5	G-8	—
6-Row Coil																			
Face Split Coils																			
No. of TXVs	2	2	2	2	—	—	2	2	—	2	2	—	—	2	2	—	2	2	—
Suction Connections (in. OD)	7/8	7/8	7/8	7/8	—	—	1-1/8	1-3/8	—	7/8	7/8	—	—	1-1/8	1-5/8	—	7/8	7/8	—
Distributor Connections (in. OD)	7/8	7/8	7/8	7/8	—	—	7/8	1-3/8	—	7/8	7/8	—	—	7/8	1-3/8	—	7/8	7/8	—
Distributor Nozzle Size*	G-1.5	G-2.5/ G-2	G-1.5	G-2.5/ G-2	—	—	G-4	C-12	—	G-1.5	G-2.5	—	—	G-6	C-15	—	G-1.5	G-2.5	—
Intertwined Row Split Coils																			
No. of TXVs	2	2	2	2	—	—	2	2	—	2	2	—	—	2	2	—	2	2	—
Suction Connections (in. OD)	7/8	7/8	7/8	7/8	—	—	1-1/8	1-3/8	—	7/8	7/8	—	—	1-1/8	1-5/8	—	7/8	7/8	—
Distributor Connections (in. OD)	7/8	7/8	7/8	7/8	—	—	7/8	1-3/8	—	7/8	7/8	—	—	7/8	1-3/8	—	7/8	7/8	—
Distributor Nozzle Size*	G-1.5	G-2.5/ G-2	G-1.5	G-2.5/ G-2	—	—	G-4	C-12	—	G-1.5	G-2.5	—	—	G-6	C-15	—	G-1.5	G-2.5	—
Single Circuit Coils																			
No. of TXVs	1	1	1	1	—	—	1	—	—	1	1	—	—	1	—	—	1	1	—
Suction Connections (in. OD)	7/8	1-1/8	7/8	1-1/8	—	—	1-3/8	—	—	7/8	1-1/8	—	—	1-5/8	—	—	7/8	1-1/8	—
Distributor Connections (in. OD)	7/8	7/8	7/8	7/8	—	—	1-3/8	—	—	7/8	7/8	—	—	1-3/8	—	—	7/8	7/8	—
Distributor Nozzle Size	G-2.5	G-6	G-2.5	G-6	—	—	C-12	—	—	G-2.5	G-8	—	—	C-15	—	—	G-2.5	G-8	—
8-Row Coil																			
Face Split Coils																			
No. of TXVs	—	2	—	2	2	—	2	2	4	—	2	2	—	2	2	4	—	2	2
Suction Connections (in. OD)	—	7/8	—	7/8	1-1/8	—	1-1/8	1-3/8	1-3/8	—	7/8	1-1/8	—	1-1/8	1-5/8	1-5/8	—	7/8	1-1/8
Distributor Connections (in. OD)	—	7/8	—	7/8	7/8	—	7/8	1-3/8	1-3/8	—	7/8	7/8	—	7/8	1-3/8	1-3/8	—	7/8	7/8
Distributor Nozzle Size*	—	G-2.5/ G-2	—	G-2.5/ G-2	G-6	—	G-4	C-12	C-12	—	G-2.5	G-8	—	G-6	C-15	C-15	—	G-2.5	G-8
Intertwined Row Split Coils																			
No. of TXVs	—	2	—	2	2	—	2	2	4	—	2	2	—	2	2	4	—	2	2
Suction Connections (in. OD)	—	7/8	—	7/8	1-1/8	—	1-1/8	1-3/8	1-3/8	—	7/8	1-1/8	—	1-1/8	1-5/8	1-5/8	—	7/8	1-1/8
Distributor Connections (in. OD)	—	7/8	—	7/8	7/8	—	7/8	1-3/8	1-3/8	—	7/8	7/8	—	7/8	1-3/8	1-3/8	—	7/8	7/8
Distributor Nozzle Size*	—	G-2.5/ G-2	—	G-2.5/ G-2	G-6	—	G-4	C-12	C-12	—	G-2.5	G-8	—	G-6	C-15	C-15	—	G-2.5	G-8
Single Circuit Coils																			
No. of TXVs	1	1	—	1	—	—	1	—	—	—	1	—	—	1	—	—	—	1	—
Suction Connections (in. OD)	7/8	1-1/8	—	1-1/8	—	—	1-3/8	—	—	—	1-1/8	—	—	1-5/8	—	—	—	1-1/8	—
Distributor Connections (in. OD)	7/8	7/8	—	7/8	—	—	1-3/8	—	—	—	7/8	—	—	1-3/8	—	—	—	7/8	—
Distributor Nozzle Size	G-2.5	G-6	—	G-6	—	—	C-12	—	—	—	G-8	—	—	C-15	—	—	—	G-8	—

LEGEND

TXV — Thermostatic Expansion Valve (Field Supplied)

*When 2 nozzle sizes are listed, the smaller nozzle should be located on the upper distributor.

NOTE: Factory-supplied distributors have factory-selected nozzle sizes as shown. If necessary, replace factory-supplied nozzles with field-supplied and installed nozzles. Consult ***AHU*Builder®** software selection program for correct nozzle selection.

Table 11 — Direct-Expansion Circuiting Data (cont)

Medium Face Area Coils (cont)

39M UNIT SIZE	11T			12W			12T			14W			16T		17W		18T	
CIRCUITING TYPE	Half	Full	Double	Quarter	Half	Full	Half	Full	Double	Quarter	Half	Full	Half	Full	Half	Full	Half	Full
Airflow (cfm) at 500 fpm	4,444			4,965			4,861			6,146			5,938		6,771		7,474	
Total Face Area (sq ft)	8.9			9.9			9.7			12.3			11.9		13.5		14.9	
Tubes in Face	32	32	32	22	22	22	32	32	32	24	24	24	36	36	24	24	42	42
Tube Length (in.)	32	32	32	52	52	52	35	35	35	59	59	59	38	38	65	65	41	41
No. of Circuits - Total	16	32	64	6	11	22	16	32	64	6	12	24	18	36	12	24	21	42
4-Row Coil																		
Face Split Coils																		
No. of TXVs	2	2	—	2	2	2	2	2	—	2	2	2	2	2	2	2	2	4
Suction Connections (in. OD)	1-1/8	1-5/8	—	7/8	1-1/8	1-3/8	1-1/8	1-5/8	—	7/8	1-1/8	1-3/8	1-3/8	1-5/8	1-1/8	1-3/8	1-3/8	1-3/8
Distributor Connections (in. OD)	7/8	1-3/8	—	7/8	7/8	1-1/8	7/8	1-3/8	—	7/8	7/8	1-3/8	1-1/8	1-3/8	7/8	1-3/8	1-1/8	1-1/8
Distributor Nozzle Size*	G-8	C-17	—	G-2	G-4/ G-3	E-12	G-8	C-17	—	G-2	G-4	C-12	E-8	C-17	G-4	C-12	E-12/ E-10	E-12/ E-10
Intertwined Row Split Coils																		
No. of TXVs	2	2	—	2	2	2	2	2	—	2	2	2	2	2	2	2	2	4
Suction Connections (in. OD)	1-1/8	1-5/8	—	7/8	1-1/8	1-3/8	1-1/8	1-5/8	—	7/8	1-1/8	1-3/8	1-3/8	1-5/8	1-1/8	1-3/8	1-3/8	1-3/8
Distributor Connections (in. OD)	7/8	1-3/8	—	7/8	7/8	1-1/8	7/8	1-3/8	—	7/8	7/8	1-3/8	1-1/8	1-3/8	7/8	1-3/8	1-1/8	1-1/8
Distributor Nozzle Size*	G-8	C-17	—	G-2	G-4/ G-3	E-12	G-8	C-17	—	G-2	G-4	C-12	E-8	C-17	G-4	C-12	E-12/ E-10	E-12/ E-10
Single Circuit Coils																		
No. of TXVs	—	—	—	1	1	—	—	—	—	1	1	—	—	—	1	—	—	—
Suction Connections (in. OD)	—	—	—	1-1/8	1-3/8	—	—	—	—	1-1/8	1-3/8	—	—	—	1-3/8	—	—	—
Distributor Connections (in. OD)	—	—	—	7/8	1-1/8	—	—	—	—	7/8	1-3/8	—	—	—	1-3/8	—	—	—
Distributor Nozzle Size	—	—	—	G-4	E-12	—	—	—	—	G-4	C-12	—	—	—	C-12	—	—	—
6-Row Coil																		
Face Split Coils																		
No. of TXVs	2	2	—	2	2	2	2	2	—	—	2	2	2	2	2	2	2	4
Suction Connections (in. OD)	1-1/8	1-5/8	—	7/8	1-1/8	1-3/8	1-1/8	1-5/8	—	—	1-1/8	1-3/8	1-3/8	1-5/8	1-1/8	1-3/8	1-3/8	1-3/8
Distributor Connections (in. OD)	7/8	1-3/8	—	7/8	7/8	1-1/8	7/8	1-3/8	—	—	7/8	1-3/8	1-1/8	1-3/8	7/8	1-3/8	1-1/8	1-1/8
Distributor Nozzle Size*	G-8	C-17	—	G-2	G-4/ G-3	E-12	G-8	C-17	—	—	G-4	C-12	E-8	C-17	G-4	C-12	E-12/ E-10	E-12/ E-10
Intertwined Row Split Coils																		
No. of TXVs	2	2	—	2	2	2	2	2	—	—	2	2	2	2	2	2	2	4
Suction Connections (in. OD)	1-1/8	1-5/8	—	7/8	1-1/8	1-3/8	1-1/8	1-5/8	—	—	1-1/8	1-3/8	1-3/8	1-5/8	1-1/8	1-3/8	1-3/8	1-3/8
Distributor Connections (in. OD)	7/8	1-3/8	—	7/8	7/8	1-1/8	7/8	1-3/8	—	—	7/8	1-3/8	1-1/8	1-3/8	7/8	1-3/8	1-1/8	1-1/8
Distributor Nozzle Size*	G-8	C-17	—	G-2	G-4/ G-3	E-12	G-8	C-17	—	—	G-4	C-12	E-8	C-17	G-4	C-12	E-12/ E-10	E-12/ E-10
Single Circuit Coils																		
No. of TXVs	—	—	—	1	1	—	—	—	—	—	1	—	—	—	1	—	—	—
Suction Connections (in. OD)	—	—	—	1-1/8	1-3/8	—	—	—	—	—	1-3/8	—	—	—	1-3/8	—	—	—
Distributor Connections (in. OD)	—	—	—	7/8	1-1/8	—	—	—	—	—	1-3/8	—	—	—	1-3/8	—	—	—
Distributor Nozzle Size	—	—	—	G-4	E-12	—	—	—	—	—	C-12	—	—	—	C-12	—	—	—
8-Row Coil																		
Face Split Coils																		
No. of TXVs	2	2	4	—	2	2	2	2	4	—	2	2	2	2	2	2	2	4
Suction Connections (in. OD)	1-1/8	1-5/8	1-5/8	—	1-1/8	1-3/8	1-1/8	1-5/8	1-5/8	—	1-1/8	1-3/8	1-3/8	1-5/8	1-1/8	1-3/8	1-3/8	1-3/8
Distributor Connections (in. OD)	7/8	1-3/8	1-3/8	—	7/8	1-1/8	7/8	1-3/8	1-3/8	—	7/8	1-3/8	1-1/8	1-3/8	7/8	1-3/8	1-1/8	1-1/8
Distributor Nozzle Size*	G-8	C-17	C-17	—	G-4/ G-3	E-12	G-8	C-17	C-17	—	G-4	C-12	E-8	C-17	G-4	C-12	E-12/ E-10	E-12/ E-10
Intertwined Row Split Coils																		
No. of TXVs	2	2	4	—	2	2	2	2	4	—	2	2	2	2	2	2	2	4
Suction Connections (in. OD)	1-1/8	1-5/8	1-5/8	—	1-1/8	1-3/8	1-1/8	1-5/8	1-5/8	—	1-1/8	1-3/8	1-3/8	1-5/8	1-1/8	1-3/8	1-3/8	1-3/8
Distributor Connections (in. OD)	7/8	1-3/8	1-3/8	—	7/8	1-1/8	7/8	1-3/8	1-3/8	—	7/8	1-3/8	1-1/8	1-3/8	7/8	1-3/8	1-1/8	1-1/8
Distributor Nozzle Size*	G-8	C-17	C-17	—	G-4/ G-3	E-12	G-8	C-17	C-17	—	G-4	C-12	E-8	C-17	G-4	C-12	E-12/ E-10	E-12/ E-10
Single Circuit Coils																		
No. of TXVs	—	—	—	—	1	—	—	—	—	—	1	—	—	—	1	—	—	—
Suction Connections (in. OD)	—	—	—	—	1-3/8	—	—	—	—	—	1-3/8	—	—	—	1-3/8	—	—	—
Distributor Connections (in. OD)	—	—	—	—	1-1/8	—	—	—	—	—	1-3/8	—	—	—	1-3/8	—	—	—
Distributor Nozzle Size	—	—	—	—	E-12	—	—	—	—	—	C-12	—	—	—	C-12	—	—	—

LEGEND

TXV — Thermostatic Expansion Valve (Field Supplied)

*When 2 nozzle sizes are listed, the smaller nozzle should be located on the upper distributor.

NOTE: Factory-supplied distributors have factory-selected nozzle sizes as shown. If necessary, replace factory-supplied nozzles with field-supplied and installed nozzles. Consult ***AHU*Builder®** software selection program for correct nozzle selection.

Table 11 — Direct-Expansion Circuiting Data (cont)

Medium Face Area Coils (cont)

39M UNIT SIZE	21W			22T			25W			25T			30W		
CIRCUITING TYPE	Half	Full	Double	Half	Full	Double	Half	Full	Double	Half	Full	Double	Half	Full	Double
Airflow (cfm) at 500 fpm		9,028			8,976			10,278			9,358			12,778	
Total Face Area (sq ft)		18.1			18.0			20.6			18.7			25.6	
Tubes in Face	32	32	32	44	44	44	32	32	32	44	44	44	32	32	32
Tube Length (in.)	65	65	65	47	47	47	74	74	74	49	49	49	92	92	92
No. of Circuits - Total	16	32	64	22	44	88	16	32	64	22	44	88	16	32	64
4-Row Coil															
Face Split Coils															
No. of TXVs	2	2	—	2	4	—	2	2	—	2	4	—	2	2	—
Suction Connections (in. OD)	1-1/8	1-5/8	—	1-3/8	1-3/8	—	1-1/8	1-5/8	—	1-3/8	1-3/8	—	1-1/8	1-5/8	—
Distributor Connections (in. OD)	7/8	1-3/8	—	1-1/8	1-1/8	—	7/8	1-3/8	—	1-1/8	1-1/8	—	7/8	1-3/8	—
Distributor Nozzle Size	G-8	C-17	—	E-12	E-12	—	G-8	C-17	—	E-12	E-12	—	G-8	C-17	—
Intertwined Row Split Coils															
No. of TXVs	2	2	—	2	4	—	2	2	—	2	4	—	2	2	—
Suction Connections (in. OD)	1-1/8	1-5/8	—	1-3/8	1-3/8	—	1-1/8	1-5/8	—	1-3/8	1-3/8	—	1-1/8	1-5/8	—
Distributor Connections (in. OD)	7/8	1-3/8	—	1-1/8	1-1/8	—	7/8	1-3/8	—	1-1/8	1-1/8	—	7/8	1-3/8	—
Distributor Nozzle Size	G-8	C-17	—	E-12	E-12	—	G-8	C-17	—	E-12	E-12	—	G-8	C-17	—
Single Circuit Coils															
No. of TXVs	—	—	—	—	—	—	—	—	—	—	—	—	—	—	—
Suction Connections (in. OD)	—	—	—	—	—	—	—	—	—	—	—	—	—	—	—
Distributor Connections (in. OD)	—	—	—	—	—	—	—	—	—	—	—	—	—	—	—
Distributor Nozzle Size	—	—	—	—	—	—	—	—	—	—	—	—	—	—	—
6-Row Coil															
Face Split Coils															
No. of TXVs	2	2	—	2	4	—	2	2	—	2	4	—	2	2	—
Suction Connections (in. OD)	1-1/8	1-5/8	—	1-3/8	1-3/8	—	1-1/8	1-5/8	—	1-3/8	1-3/8	—	1-1/8	1-5/8	—
Distributor Connections (in. OD)	7/8	1-3/8	—	1-1/8	1-1/8	—	7/8	1-3/8	—	1-1/8	1-1/8	—	7/8	1-3/8	—
Distributor Nozzle Size	G-8	C-17	—	E-12	E-12	—	G-8	C-17	—	E-12	E-12	—	G-8	C-17	—
Intertwined Row Split Coils															
No. of TXVs	2	2	—	2	4	—	2	2	—	2	4	—	2	2	—
Suction Connections (in. OD)	1-1/8	1-5/8	—	1-3/8	1-3/8	—	1-1/8	1-5/8	—	1-3/8	1-3/8	—	1-1/8	1-5/8	—
Distributor Connections (in. OD)	7/8	1-3/8	—	1-1/8	1-1/8	—	7/8	1-3/8	—	1-1/8	1-1/8	—	7/8	1-3/8	—
Distributor Nozzle Size	G-8	C-17	—	E-12	E-12	—	G-8	C-17	—	E-12	E-12	—	G-8	C-17	—
Single Circuit Coils															
No. of TXVs	—	—	—	—	—	—	—	—	—	—	—	—	—	—	—
Suction Connections (in. OD)	—	—	—	—	—	—	—	—	—	—	—	—	—	—	—
Distributor Connections (in. OD)	—	—	—	—	—	—	—	—	—	—	—	—	—	—	—
Distributor Nozzle Size	—	—	—	—	—	—	—	—	—	—	—	—	—	—	—
8-Row Coil															
Face Split Coils															
No. of TXVs	2	2	4	2	4	8	2	2	4	2	4	8	2	2	4
Suction Connections (in. OD)	1-1/8	1-5/8	1-5/8	1-3/8	1-3/8	1-3/8	1-1/8	1-5/8	1-5/8	1-3/8	1-3/8	1-3/8	1-1/8	1-5/8	1-5/8
Distributor Connections (in. OD)	7/8	1-3/8	1-3/8	1-1/8	1-1/8	1-1/8	7/8	1-3/8	1-3/8	1-1/8	1-1/8	1-1/8	7/8	1-3/8	1-3/8
Distributor Nozzle Size	G-8	C-17	C-17	E-12	E-12	E-12	G-8	C-17	C-17	E-12	E-12	E-12	G-8	C-17	C-17
Intertwined Row Split Coils															
No. of TXVs	—	2	4	—	4	8	2	2	4	—	4	8	—	2	4
Suction Connections (in. OD)	—	1-5/8	1-5/8	—	1-3/8	1-3/8	1-1/8	1-5/8	1-5/8	—	1-3/8	1-3/8	—	1-5/8	1-5/8
Distributor Connections (in. OD)	—	1-3/8	1-3/8	—	1-1/8	1-1/8	7/8	1-3/8	1-3/8	—	1-1/8	1-1/8	—	1-3/8	1-3/8
Distributor Nozzle Size	—	C-17	C-17	—	E-12	E-12	G-8	C-17	C-17	—	E-12	E-12	—	C-17	C-17
Single Circuit Coils															
No. of TXVs	—	—	—	—	—	—	—	—	—	—	—	—	—	—	—
Suction Connections (in. OD)	—	—	—	—	—	—	—	—	—	—	—	—	—	—	—
Distributor Connections (in. OD)	—	—	—	—	—	—	—	—	—	—	—	—	—	—	—
Distributor Nozzle Size	—	—	—	—	—	—	—	—	—	—	—	—	—	—	—

LEGEND

TXV — Thermostatic Expansion Valve (Field Supplied)

*When 2 nozzle sizes are listed, the smaller nozzle should be located on the upper distributor.

NOTE: Factory-supplied distributors have factory-selected nozzle sizes as shown. If necessary, replace factory-supplied nozzles with field-supplied and installed nozzles. Consult ***AHU*Builder®** software selection program for correct nozzle selection.

Table 11 — Direct-Expansion Circuiting Data (cont)
Medium Face Area Coils (cont)

39M UNIT SIZE	30T			35T						36W		37T						40W	
CIRCUITING TYPE	Half	Full	Double	Half		Full		Double		Full	Double	Half		Full		Double		Full	Double
Airflow (cfm) at 500 fpm	11,267			13,958						15,000		15,365						18,333	
Total Face Area (sq ft)	22.5			27.9						30.0		30.7						36.7	
Tubes in Face	44	44	44	24	24	24	24	24	24	36	36	30	30	30	30	30	30	44	44
Tube Length (in.)	59	59	59	67	67	67	67	67	67	104	104	59	59	59	59	59	59	96	96
No. of Circuits - Total	22	44	88	12	12	24	24	48	48	36	72	15	15	30	30	60	60	44	88
4-Row Coil				Upper	Lower	Upper	Lower	Upper	Lower			Upper	Lower	Upper	Lower	Upper	Lower		
Face Split Coils																			
No. of TXVs	2	4	—	2	2	2	2	—	—	2	—	2	2	2	2	—	—	4	—
Suction Connections (in. OD)	1-3/8	1-3/8	—	1-1/8	1-1/8	1-3/8	1-3/8	—	—	1-5/8	—	1-1/8	1-1/8	1-5/8	1-5/8	—	—	1-3/8	—
Distributor Connections (in. OD)	1-1/8	1-1/8	—	7/8	7/8	1-3/8	1-3/8	—	—	1-3/8	—	7/8	7/8	1-3/8	1-3/8	—	—	1-1/8	—
Distributor Nozzle Size*	E-12	E-12	—	G-4	G-4	C-12	C-12	—	—	C-17	—	G-8/G-6	G-8/G-6	C-15	C-15	—	—	E-12	—
Intertwined Row Split Coils																			
No. of TXVs	2	4	—	2	2	2	2	—	—	2	—	2	2	2	2	—	—	4	—
Suction Connections (in. OD)	1-3/8	1-3/8	—	1-1/8	1-1/8	1-3/8	1-3/8	—	—	1-5/8	—	1-1/8	1-1/8	1-5/8	1-5/8	—	—	1-3/8	—
Distributor Connections (in. OD)	1-1/8	1-1/8	—	7/8	7/8	1-3/8	1-3/8	—	—	1-3/8	—	7/8	7/8	1-3/8	1-3/8	—	—	1-1/8	—
Distributor Nozzle Size*	E-12	E-12	—	G-4	G-4	C-12	C-12	—	—	C-17	—	G-8/G-6	G-8/G-6	C-15	C-15	—	—	E-12	—
Single Circuit Coils																			
No. of TXVs	—	—	—	—	—	—	—	—	—	—	—	—	—	—	—	—	—	—	—
Suction Connections (in. OD)	—	—	—	—	—	—	—	—	—	—	—	—	—	—	—	—	—	—	—
Distributor Connections (in. OD)	—	—	—	—	—	—	—	—	—	—	—	—	—	—	—	—	—	—	—
Distributor Nozzle Size	—	—	—	—	—	—	—	—	—	—	—	—	—	—	—	—	—	—	—
6-Row Coil																			
Face Split Coils																			
No. of TXVs	2	4	—	2	2	2	2	—	—	2	—	2	2	2	2	—	—	4	—
Suction Connections (in. OD)	1-3/8	1-3/8	—	1-1/8	1-1/8	1-3/8	1-3/8	—	—	1-5/8	—	1-1/8	1-1/8	1-5/8	1-5/8	—	—	1-3/8	—
Distributor Connections (in. OD)	1-1/8	1-1/8	—	7/8	7/8	1-3/8	1-3/8	—	—	1-3/8	—	7/8	7/8	1-3/8	1-3/8	—	—	1-1/8	—
Distributor Nozzle Size*	E-12	E-12	—	G-4	G-4	C-12	C-12	—	—	C-17	—	G-8/G-6	G-8/G-6	C-15	C-15	—	—	E-12	—
Intertwined Row Split Coils																			
No. of TXVs	2	4	—	2	2	2	2	—	—	2	—	2	2	2	2	—	—	4	—
Suction Connections (in. OD)	1-3/8	1-3/8	—	1-1/8	1-1/8	1-3/8	1-3/8	—	—	1-5/8	—	1-1/8	1-1/8	1-5/8	1-5/8	—	—	1-3/8	—
Distributor Connections (in. OD)	1-1/8	1-1/8	—	7/8	7/8	1-3/8	1-3/8	—	—	1-3/8	—	7/8	7/8	1-3/8	1-3/8	—	—	1-1/8	—
Distributor Nozzle Size*	E-12	E-12	—	G-4	G-4	C-12	C-12	—	—	C-17	—	G-8/G-6	G-8/ G-6	C-15	C-15	—	—	E-12	—
Single Circuit Coils																			
No. of TXVs	—	—	—	—	—	—	—	—	—	—	—	—	—	—	—	—	—	—	—
Suction Connections (in. OD)	—	—	—	—	—	—	—	—	—	—	—	—	—	—	—	—	—	—	—
Distributor Connections (in. OD)	—	—	—	—	—	—	—	—	—	—	—	—	—	—	—	—	—	—	—
Distributor Nozzle Size	—	—	—	—	—	—	—	—	—	—	—	—	—	—	—	—	—	—	—
8-Row Coil																			
Face Split Coils																			
No. of TXVs	2	4	8	2	2	2	2	4	4	2	4	2	2	2	2	4	4	4	8
Suction Connections (in. OD)	1-3/8	1-3/8	1-3/8	1-1/8	1-1/8	1-3/8	1-3/8	1-3/8	1-3/8	1-5/8	1-5/8	1-1/8	1-1/8	1-5/8	1-5/8	1-5/8	1-5/8	1-3/8	1-3/8
Distributor Connections (in. OD)	1-1/8	1-1/8	1-1/8	7/8	7/8	1-3/8	1-3/8	1-3/8	1-3/8	1-3/8	1-3/8	7/8	7/8	1-3/8	1-3/8	1-3/8	1-3/8	1-1/8	1-1/8
Distributor Nozzle Size*	E-12	E-12	E-12	G-4	G-4	C-12	C-12	C-12	C-12	C-17	C-17	G-8/G-6	G-8/G-6	C-15	C-15	C-15	C-15	E-12	E-12
Intertwined Row Split Coils																			
No. of TXVs	—	4	8	2	2	2	2	4	4	2	4	2	2	2	2	4	4	4	8
Suction Connections (in. OD)	—	1-3/8	1-3/8	1-1/8	1-1/8	1-3/8	1-3/8	1-3/8	1-3/8	1-5/8	1-5/8	1-1/8	1-1/8	1-5/8	1-5/8	1-5/8	1-5/8	1-3/8	1-3/8
Distributor Connections (in. OD)	—	1-1/8	1-1/8	7/8	7/8	1-3/8	1-3/8	1-3/8	1-3/8	1-3/8	1-3/8	7/8	7/8	1-3/8	1-3/8	1-3/8	1-3/8	1-1/8	1-1/8
Distributor Nozzle Size*	—	E-12	E-12	G-4	G-4	C-12	C-12	C-12	C-12	C-17	C-17	G-8/G-6	G-8/G-6	C-15	C-15	C-15	C-15	E-12	E-12
Single Circuit Coils																			
No. of TXVs	—	—	—	—	—	—	—	—	—	—	—	—	—	—	—	—	—	—	—
Suction Connections (in. OD)	—	—	—	—	—	—	—	—	—	—	—	—	—	—	—	—	—	—	—
Distributor Connections (in. OD)	—	—	—	—	—	—	—	—	—	—	—	—	—	—	—	—	—	—	—
Distributor Nozzle Size	—	—	—	—	—	—	—	—	—	—	—	—	—	—	—	—	—	—	—

LEGEND

TXV — Thermostatic Expansion Valve (Field Supplied)

*When 2 nozzle sizes are listed, the smaller nozzle should be located on the upper distributor.

NOTE: Factory-supplied distributors have factory-selected nozzle sizes as shown. If necessary, replace factory-supplied nozzles with field-supplied and field-installed nozzles. Consult ***AHU*Builder®** software selection program for correct nozzle selection.

Table 11 — Direct-Expansion Circuiting Data (cont)
Medium Face Area Coils (cont)

39M UNIT SIZE	42T						50W		51T						58T					
CIRCUITING TYPE	Half		Full		Double		Full	Double	Half		Full		Double		Half		Full		Double	
Airflow (cfm) at 500 fpm	17,448						19,861		21,094						23,906					
Total Face Area (sq ft)	34.9						39.7		42.2						47.8					
Tubes in Face	30	30	30	30	30	30	44	44	30	30	30	30	30	30	34	34	34	34	34	34
Tube Length (in.)	67	67	67	67	67	67	104	104	81	81	81	81	81	81	81	81	81	81	81	81
No. of Circuits - Total	15	15	30	30	60	60	44	88	15	15	30	30	60	60	17	17	34	34	68	68
4-Row Coil	Upper	Lower	Upper	Lower	Upper	Lower			Upper	Lower	Upper	Lower	Upper	Lower	Upper	Lower	Upper	Lower	Upper	Lower
Face Split Coils																				
No. of TXVs	2	2	2	2	—	—	4	—	2	2	2	2	—	—	2	2	2	2	—	—
Suction Connections (in. OD)	1-1/8	1-1/8	1-5/8	1-5/8	—	—	1-3/8	—	1-1/8	1-1/8	1-5/8	1-5/8	—	—	1-3/8	1-3/8	1-5/8	1-5/8	—	—
Distributor Connections (in. OD)	7/8	7/8	1-3/8	1-3/8	—	—	1-1/8	—	7/8	7/8	1-3/8	1-3/8	—	—	1-1/8	1-1/8	1-3/8	1-3/8	—	—
Distributor Nozzle Size*	G-8/G-6	G-8/G-6	C-15	C-15	—	—	E-12	—	G-8/G-6	G-8/G-6	C-15	C-15	—	—	E-8	E-8	C-17	C-17	—	—
Intertwined Row Split Coils																				
No. of TXVs	2	2	2	2	—	—	4	—	2	2	2	2	—	—	2	2	2	2	—	—
Suction Connections (in. OD)	1-1/8	1-1/8	1-5/8	1-5/8	—	—	1-3/8	—	1-1/8	1-1/8	1-5/8	1-5/8	—	—	1-3/8	1-3/8	1-5/8	1-5/8	—	—
Distributor Connections (in. OD)	7/8	7/8	1-3/8	1-3/8	—	—	1-1/8	—	7/8	7/8	1-3/8	1-3/8	—	—	1-1/8	1-1/8	1-3/8	1-3/8	—	—
Distributor Nozzle Size*	G-8/G-6	G-8/G-6	C-15	C-15	—	—	E-12	—	G-8/G-6	G-8/G-6	C-15	C-15	—	—	E-8	E-8	C-17	C-17	—	—
Single Circuit Coils																				
No. of TXVs	—	—	—	—	—	—	—	—	—	—	—	—	—	—	—	—	—	—	—	—
Suction Connections (in. OD)	—	—	—	—	—	—	—	—	—	—	—	—	—	—	—	—	—	—	—	—
Distributor Connections (in. OD)	—	—	—	—	—	—	—	—	—	—	—	—	—	—	—	—	—	—	—	—
Distributor Nozzle Size	—	—	—	—	—	—	—	—	—	—	—	—	—	—	—	—	—	—	—	—
6-Row Coil																				
Face Split Coils																				
No. of TXVs	2	2	2	2	—	—	4	—	2	2	2	2	—	—	2	2	2	2	—	—
Suction Connections (in. OD)	1-1/8	1-1/8	1-5/8	1-5/8	—	—	1-3/8	—	1-1/8	1-1/8	1-5/8	1-5/8	—	—	1-3/8	1-3/8	1-5/8	1-5/8	—	—
Distributor Connections (in. OD)	7/8	7/8	1-3/8	1-3/8	—	—	1-1/8	—	7/8	7/8	1-3/8	1-3/8	—	—	1-1/8	1-1/8	1-3/8	1-3/8	—	—
Distributor Nozzle Size*	G-8/G-6	G-8/G-6	C-15	C-15	—	—	E-12	—	G-8/G-6	G-8/G-6	C-15	C-15	—	—	E-8	E-8	C-17	C-17	—	—
Intertwined Row Split Coils																				
No. of TXVs	2	2	2	2	—	—	4	—	2	2	2	2	—	—	2	2	2	2	—	—
Suction Connections (in. OD)	1-1/8	1-1/8	1-5/8	1-5/8	—	—	1-3/8	—	1-1/8	1-1/8	1-5/8	1-5/8	—	—	1-3/8	1-3/8	1-5/8	1-5/8	—	—
Distributor Connections (in. OD)	7/8	7/8	1-3/8	1-3/8	—	—	1-1/8	—	7/8	7/8	1-3/8	1-3/8	—	—	1-1/8	1-1/8	1-3/8	1-3/8	—	—
Distributor Nozzle Size*	G-8/G-6	G-8/G-6	C-15	C-15	—	—	E-12	—	G-8/G-6	G-8/G-6	C-15	C-15	—	—	E-8	E-8	C-17	C-17	—	—
Single Circuit Coils																				
No. of TXVs	—	—	—	—	—	—	—	—	—	—	—	—	—	—	—	—	—	—	—	—
Suction Connections (in. OD)	—	—	—	—	—	—	—	—	—	—	—	—	—	—	—	—	—	—	—	—
Distributor Connections (in. OD)	—	—	—	—	—	—	—	—	—	—	—	—	—	—	—	—	—	—	—	—
Distributor Nozzle Size	—	—	—	—	—	—	—	—	—	—	—	—	—	—	—	—	—	—	—	—
8-Row Coil																				
Face Split Coils																				
No. of TXVs	2	2	2	2	4	4	4	8	2	2	2	2	4	4	2	2	2	2	4	4
Suction Connections (in. OD)	1-1/8	1-1/8	1-5/8	1-5/8	1-5/8	1-5/8	1-3/8	1-3/8	1-1/8	1-1/8	1-5/8	1-5/8	1-5/8	1-5/8	1-3/8	1-3/8	1-5/8	1-5/8	1-5/8	1-5/8
Distributor Connections (in. OD)	7/8	7/8	1-3/8	1-3/8	1-3/8	1-3/8	1-1/8	1-1/8	7/8	7/8	1-3/8	1-3/8	1-3/8	1-3/8	1-1/8	1-1/8	1-3/8	1-3/8	1-3/8	1-3/8
Distributor Nozzle Size*	G-8/G-6	G-8/G-6	C-15	C-15	C-15	C-15	E-12	E-12	G-8/G-6	G-8/G-6	C-15	C-15	C-15	C-15	E-8	E-8	C-17	C-17	C-17	C-17
Intertwined Row Split Coils																				
No. of TXVs	2	2	2	2	4	4	4	8	2	2	2	2	4	4	2	2	2	2	4	4
Suction Connections (in. OD)	1-1/8	1-1/8	1-5/8	1-5/8	1-5/8	1-5/8	1-3/8	1-3/8	1-1/8	1-1/8	1-5/8	1-5/8	1-5/8	1-5/8	1-3/8	1-3/8	1-5/8	1-5/8	1-5/8	1-5/8
Distributor Connections (in. OD)	7/8	7/8	1-3/8	1-3/8	1-3/8	1-3/8	1-1/8	1-1/8	7/8	7/8	1-3/8	1-3/8	1-3/8	1-3/8	1-1/8	1-1/8	1-3/8	1-3/8	1-3/8	1-3/8
Distributor Nozzle Size*	G-8/G-6	G-8/G-6	C-15	C-15	C-15	C-15	E-12	E-12	G-8/G-6	G-8/G-6	C-15	C-15	C-15	C-15	E-8	E-8	C-17	C-17	C-17	C-17
Single Circuit Coils																				
No. of TXVs	—	—	—	—	—	—	—	—	—	—	—	—	—	—	—	—	—	—	—	—
Suction Connections (in. OD)	—	—	—	—	—	—	—	—	—	—	—	—	—	—	—	—	—	—	—	—
Distributor Connections (in. OD)	—	—	—	—	—	—	—	—	—	—	—	—	—	—	—	—	—	—	—	—
Distributor Nozzle Size	—	—	—	—	—	—	—	—	—	—	—	—	—	—	—	—	—	—	—	—

LEGEND

TXV — Thermostatic Expansion Valve (Field Supplied)

*When 2 nozzle sizes are listed, the smaller nozzle should be located on the upper distributor.

NOTE: Factory-supplied distributors have factory-selected nozzle sizes as shown. If necessary, replace factory-supplied nozzles with field-supplied and field-installed nozzles. Consult ***AHU*Builder®** software selection program for correct nozzle selection.

Table 11 — Direct-Expansion Circuiting Data (cont)
Medium Face Area Coils (cont)

39M UNIT SIZE	61W				72W				85W				96W				110W			
CIRCUITING TYPE	Full		Double		Full		Double		Full		Double		Full		Double		Full		Double	
Airflow (cfm) at 500 fpm	25,278				29,722				35,000				39,375				45,000			
Total Face Area (sq ft)	50.6				59.4				70.0				78.8				90.0			
Tubes in Face	28	28	28	28	32	32	32	32	32	32	32	32	36	36	36	36	36	36	36	36
Tube Length (in.)	104	104	104	104	107	107	107	107	126	126	126	126	126	126	126	126	144	144	144	144
No. of Circuits - Total	28	28	56	56	32	32	64	64	32	32	64	64	36	36	72	72	36	36	72	72
4-Row Coil	Upper	Lower	Upper	Lower	Upper	Lower	Upper	Lower	Upper	Lower	Upper	Lower	Upper	Lower	Upper	Lower	Upper	Lower	Upper	Lower
Face Split Coils																				
No. of TXVs	2	2	—	—	2	2	—	—	2	2	—	—	2	2	—	—	2	2	—	—
Suction Connections (in. OD)	1-5/8	1-5/8	—	—	1-5/8	1-5/8	—	—	1-5/8	1-5/8	—	—	1-5/8	1-5/8	—	—	1-5/8	1-5/8	—	—
Distributor Connections (in. OD)	1-3/8	1-3/8	—	—	1-3/8	1-3/8	—	—	1-3/8	1-3/8	—	—	1-3/8	1-3/8	—	—	1-3/8	1-3/8	—	—
Distributor Nozzle Size	C-15	C-15	—	—	C-17	C-17	—	—	C-17	C-17	—	—	C-17	C-17	—	—	C-17	C-17	—	—
Intertwined Row Split Coils																				
No. of TXVs	2	2	—	—	2	2	—	—	2	2	—	—	2	2	—	—	2	2	—	—
Suction Connections (in. OD)	1-5/8	1-5/8	—	—	1-5/8	1-5/8	—	—	1-5/8	1-5/8	—	—	1-5/8	1-5/8	—	—	1-5/8	1-5/8	—	—
Distributor Connections (in. OD)	1-3/8	1-3/8	—	—	1-3/8	1-3/8	—	—	1-3/8	1-3/8	—	—	1-3/8	1-3/8	—	—	1-3/8	1-3/8	—	—
Distributor Nozzle Size	C-15	C-15	—	—	C-17	C-17	—	—	C-17	C-17	—	—	C-17	C-17	—	—	C-17	C-17	—	—
Single Circuit Coils																				
No. of TXVs	—	—	—	—	—	—	—	—	—	—	—	—	—	—	—	—	—	—	—	—
Suction Connections (in. OD)	—	—	—	—	—	—	—	—	—	—	—	—	—	—	—	—	—	—	—	—
Distributor Connections (in. OD)	—	—	—	—	—	—	—	—	—	—	—	—	—	—	—	—	—	—	—	—
Distributor Nozzle Size	—	—	—	—	—	—	—	—	—	—	—	—	—	—	—	—	—	—	—	—
6-Row Coil																				
Face Split Coils																				
No. of TXVs	2	2	—	—	2	2	—	—	2	2	—	—	2	2	—	—	2	2	—	—
Suction Connections (in. OD)	1-5/8	1-5/8	—	—	1-5/8	1-5/8	—	—	1-5/8	1-5/8	—	—	1-5/8	1-5/8	—	—	1-5/8	1-5/8	—	—
Distributor Connections (in. OD)	1-3/8	1-3/8	—	—	1-3/8	1-3/8	—	—	1-3/8	1-3/8	—	—	1-3/8	1-3/8	—	—	1-3/8	1-3/8	—	—
Distributor Nozzle Size	C-15	C-15	—	—	C-17	C-17	—	—	C-17	C-17	—	—	C-17	C-17	—	—	C-17	C-17	—	—
Intertwined Row Split Coils																				
No. of TXVs	2	2	—	—	2	2	—	—	2	2	—	—	2	2	—	—	2	2	—	—
Suction Connections (in. OD)	1-5/8	1-5/8	—	—	1-5/8	1-5/8	—	—	1-5/8	1-5/8	—	—	1-5/8	1-5/8	—	—	1-5/8	1-5/8	—	—
Distributor Connections (in. OD)	1-3/8	1-3/8	—	—	1-3/8	1-3/8	—	—	1-3/8	1-3/8	—	—	1-3/8	1-3/8	—	—	1-3/8	1-3/8	—	—
Distributor Nozzle Size	C-15	C-15	—	—	C-17	C-17	—	—	C-17	C-17	—	—	C-17	C-17	—	—	C-17	C-17	—	—
Single Circuit Coils																				
No. of TXVs	—	—	—	—	—	—	—	—	—	—	—	—	—	—	—	—	—	—	—	—
Suction Connections (in. OD)	—	—	—	—	—	—	—	—	—	—	—	—	—	—	—	—	—	—	—	—
Distributor Connections (in. OD)	—	—	—	—	—	—	—	—	—	—	—	—	—	—	—	—	—	—	—	—
Distributor Nozzle Size	—	—	—	—	—	—	—	—	—	—	—	—	—	—	—	—	—	—	—	—
8-Row Coil																				
Face Split Coils																				
No. of TXVs	2	2	4	4	2	2	4	4	2	2	4	4	2	2	4	4	2	2	4	4
Suction Connections (in. OD)	1-5/8	1-5/8	1-5/8	1-5/8	1-5/8	1-5/8	1-5/8	1-5/8	1-5/8	1-5/8	1-5/8	1-5/8	1-5/8	1-5/8	1-5/8	1-5/8	1-5/8	1-5/8	1-5/8	1-5/8
Distributor Connections (in. OD)	1-3/8	1-3/8	1-3/8	1-3/8	1-3/8	1-3/8	1-3/8	1-3/8	1-3/8	1-3/8	1-3/8	1-3/8	1-3/8	1-3/8	1-3/8	1-3/8	1-3/8	1-3/8	1-3/8	1-3/8
Distributor Nozzle Size	C-15	C-15	C-15	C-15	C-17	C-17	C-17	C-17	C-17	C-17	C-17	C-17	C-17	C-17	C-17	C-17	C-17	C-17	C-17	C-17
Intertwined Row Split Coils																				
No. of TXVs	2	2	4	4	2	2	4	4	2	2	4	4	2	2	4	4	2	2	4	4
Suction Connections (in. OD)	1-5/8	1-5/8	1-5/8	1-5/8	1-5/8	1-5/8	1-5/8	1-5/8	1-5/8	1-5/8	1-5/8	1-5/8	1-5/8	1-5/8	1-5/8	1-5/8	1-5/8	1-5/8	1-5/8	1-5/8
Distributor Connections (in. OD)	1-3/8	1-3/8	1-3/8	1-3/8	1-3/8	1-3/8	1-3/8	1-3/8	1-3/8	1-3/8	1-3/8	1-3/8	1-3/8	1-3/8	1-3/8	1-3/8	1-3/8	1-3/8	1-3/8	1-3/8
Distributor Nozzle Size	C-15	C-15	C-15	C-15	C-17	C-17	C-17	C-17	C-17	C-17	C-17	C-17	C-17	C-17	C-17	C-17	C-17	C-17	C-17	C-17
Single Circuit Coils																				
No. of TXVs	—	—	—	—	—	—	—	—	—	—	—	—	—	—	—	—	—	—	—	—
Suction Connections (in. OD)	—	—	—	—	—	—	—	—	—	—	—	—	—	—	—	—	—	—	—	—
Distributor Connections (in. OD)	—	—	—	—	—	—	—	—	—	—	—	—	—	—	—	—	—	—	—	—
Distributor Nozzle Size	—	—	—	—	—	—	—	—	—	—	—	—	—	—	—	—	—	—	—	—

LEGEND

TXV — Thermostatic Expansion Valve (Field Supplied)

*When 2 nozzle sizes are listed, the smaller nozzle should be located on the upper distributor.

NOTE: Factory-supplied distributors have factory-selected nozzle sizes as shown. If necessary, replace factory-supplied nozzles with field-supplied and field-installed nozzles. Consult ***AHU*Builder®** software selection program for correct nozzle selection.

Table 11 — Direct-Expansion Circuiting Data (cont)

Large Face Area Coils

39M UNIT SIZE	03W		06W			07T				08W			09T			
CIRCUITING TYPE	Quarter	Half	Quarter	Half	Full	Quarter	Half	Full	Double	Quarter	Half	Full	Quarter	Half	Full	Double
Airflow (cfm) at 500 fpm	1,736		2,951			3,837				3,819			4,531			
Total Face Area (sq ft)	3.5		5.9			7.7				7.6			9.1			
Tubes in Face	20	20	20	20	20	34	34	34	34	22	22	22	36	36	36	36
Tube Length (in.)	20	20	34	34	34	26	26	26	26	40	40	40	29	29	29	29
No. of Circuits - Total	4	10	4	10	20	9	17	34	68	6	11	22	9	18	36	72
4-Row Coil																
Face Split Coils																
No. of TXVs	2	2	2	2	—	2	2	2	—	2	2	—	2	2	2	—
Suction Connections (in. OD)	7/8	1-1/8	7/8	1-1/8	—	1-1/8	1-3/8	1-5/8	—	7/8	1-1/8	—	1-1/8	1-3/8	1-5/8	—
Distributor Connections (in. OD)	7/8	7/8	7/8	7/8	—	7/8	1-1/8	1-3/8	—	7/8	7/8	—	7/8	1-1/8	1-3/8	—
Distributor Nozzle Size*	G-1.5	G-3	G-1.5	G-3	—	G-3/G-2.5	E-8	C-17	—	G-2	G-4 / G-3	—	G-3 /G-2.	E-8	C-17	—
Intertwined Row Split Coils																
No. of TXVs	2	2	2	2	—	2	2	2	—	2	2	—	2	2	2	—
Suction Connections (in. OD)	7/8	1-1/8	7/8	1-1/8	—	1-1/8	1-3/8	1-5/8	—	7/8	1-1/8	—	1-1/8	1-3/8	1-5/8	—
Distributor Connections (in. OD)	7/8	7/8	7/8	7/8	—	7/8	1-1/8	1-3/8	—	7/8	7/8	—	7/8	1-1/8	1-3/8	—
Distributor Nozzle Size*	G-1.5	G-3	G-1.5	G-3	—	G-3/G-2.5	E-8	C-17	—	G-2	G-4/G-3	—	G-3/G-2.5	E-8	C-17	—
Single Circuit Coils																
No. of TXVs	1	1	1	1	—	1	—	—	—	1	1	—	1	—	—	—
Suction Connections (in. OD)	1-1/8	1-3/8	1-1/8	1-3/8	—	1-3/8	—	—	—	1-1/8	1-3/8	—	1-3/8	—	—	—
Distributor Connections (in. OD)	7/8	1-1/8	7/8	1-1/8	—	1-1/8	—	—	—	7/8	1-1/8	—	1-1/8	—	—	—
Distributor Nozzle Size	G-3	E-10	G-3	E-10	—	E-8	—	—	—	G-4	E-12	—	E-8	—	—	—
6-Row Coil																
Face Split Coils																
No. of TXVs	2	2	2	2	—	—	2	2	—	2	2	2	—	2	2	—
Suction Connections (in. OD)	7/8	1-1/8	7/8	1-1/8	—	—	1-3/8	1-5/8	—	7/8	1-1/8	1-3/8	—	1-3/8	1-5/8	—
Distributor Connections (in. OD)	7/8	7/8	7/8	7/8	—	—	1-1/8	1-3/8	—	7/8	7/8	1-1/8	—	1-1/8	1-3/8	—
Distributor Nozzle Size*	G-1.5	G-3	G-1.5	G-3	—	—	E-8	C-17	—	G-2	G-4 / G-3	E-12	—	E-8	C-17	—
Intertwined Row Split Coils																
No. of TXVs	2	2	2	2	—	—	2	2	—	2	2	2	—	2	2	—
Suction Connections (in. OD)	7/8	1-1/8	7/8	1-1/8	—	—	1-3/8	1-5/8	—	7/8	1-1/8	1-3/8	—	1-3/8	1-5/8	—
Distributor Connections (in. OD)	7/8	7/8	7/8	7/8	—	—	1-1/8	1-3/8	—	7/8	7/8	1-1/8	—	1-1/8	1-3/8	—
Distributor Nozzle Size*	G-1.5	G-3	G-1.5	G-3	—	—	E-8	C-17	—	G-2	G-4 / G-3	E-12	—	E-8	C-17	—
Single Circuit Coils																
No. of TXVs	1	1	1	1	—	—	—	—	—	1	1	—	—	—	—	—
Suction Connections (in. OD)	1-1/8	1-3/8	1-1/8	1-3/8	—	—	—	—	—	1-1/8	1-3/8	—	—	—	—	—
Distributor Connections (in. OD)	7/8	1-1/8	7/8	1-1/8	—	—	—	—	—	7/8	1-1/8	—	—	—	—	—
Distributor Nozzle Size	G-3	E-10	G-3	E-10	—	—	—	—	—	G-4	E-12	—	—	—	—	—
8-Row Coil																
Face Split Coils																
No. of TXVs	—	2	—	2	2	—	2	2	4	—	2	2	—	2	2	4
Suction Connections (in. OD)	—	1-1/8	—	1-1/8	1-3/8	—	1-3/8	1-5/8	1-5/8	—	1-1/8	1-3/8	—	1-3/8	1-5/8	1-5/8
Distributor Connections (in. OD)	—	7/8	—	7/8	1-1/8	—	1-1/8	1-3/8	1-3/8	—	7/8	1-1/8	—	1-1/8	1-3/8	1-3/8
Distributor Nozzle Size*	—	G-3	—	G-3	E-10	—	E-8	C-17	C-17	—	G-4 / G-3	E-12	—	E-8	C-17	C-17
Intertwined Row Split Coils																
No. of TXVs	—	2	—	2	2	—	2	2	4	—	2	2	—	2	2	4
Suction Connections (in. OD)	—	1-1/8	—	1-1/8	1-3/8	—	1-3/8	1-5/8	1-5/8	—	1-1/8	1-3/8	—	1-3/8	1-5/8	1-5/8
Distributor Connections (in. OD)	—	7/8	—	7/8	1-1/8	—	1-1/8	1-3/8	1-3/8	—	7/8	1-1/8	—	1-1/8	1-3/8	1-3/8
Distributor Nozzle Size*	—	G-3	—	G-3	E-10	—	E-8	C-17	C-17	—	G-4 / G-3	E-12	—	E-8	C-17	C-17
Single Circuit Coils																
No. of TXVs	—	1	—	1	—	—	—	—	—	—	1	—	—	—	—	—
Suction Connections (in. OD)	—	1-3/8	—	1-3/8	—	—	—	—	—	—	1-3/8	—	—	—	—	—
Distributor Connections (in. OD)	—	1-1/8	—	1-1/8	—	—	—	—	—	—	1-1/8	—	—	—	—	—
Distributor Nozzle Size	—	E-10	—	E-10	—	—	—	—	—	—	E-12	—	—	—	—	—

LEGEND

TXV — Thermostatic Expansion Valve (Field Supplied)

*When 2 nozzle sizes are listed, the smaller nozzle should be located on the upper distributor.

NOTE: Factory-supplied distributors have factory-selected nozzle sizes as shown. If necessary, replace factory-supplied nozzles with field-supplied and installed nozzles. Consult ***AHU*Builder®** software selection program for correct nozzle selection.

Table 11 — Direct-Expansion Circuiting Data (cont)

Large Face Area Coils (cont)

39M UNIT SIZE	10W			11T				12W			12T			
CIRCUITING TYPE	Quarter	Half	Full	Quarter	Half	Full	Double	Quarter	Half	Full	Quarter	Half	Full	Double
Airflow (cfm) at 500 fpm		4,965				5,833			6,319				6,380	
Total Face Area (sq ft)		9.9				11.7			12.6				12.8	
Tubes in Face	22	22	22	42	42	42	42	28	28	28	42	42	42	42
Tube Length (in.)	52	52	52	32	32	32	32	52	52	52	35	35	35	35
No. of Circuits - Total	6	11	22	10	21	42	84	7	14	28	10	21	42	84
4-Row Coil														
Face Split Coils														
No. of TXVs	2	2	—	2	2	4	—	2	2	2	2	2	4	—
Suction Connections (in. OD)	7/8	1-1/8	—	1-1/8	1-3/8	1-3/8	—	7/8	1-1/8	1-5/8	1-1/8	1-3/8	1-3/8	—
Distributor Connections (in. OD)	7/8	7/8	—	7/8	1-1/8	1-1/8	—	7/8	7/8	1-3/8	7/8	1-1/8	1-1/8	—
Distributor Nozzle Size*	G-2	G-4/G-3	—	G-3	E-12/E-10	E-12/E-10	—	G-2.5/G-2	G-6	C-15	G-3	E-12/E-10	E-12/E-10	—
Intertwined Row Split Coils														
No. of TXVs	2	2	—	2	2	4	—	2	2	2	2	2	4	—
Suction Connections (in. OD)	7/8	1-1/8	—	1-1/8	1-3/8	1-3/8	—	7/8	1-1/8	1-5/8	1-1/8	1-3/8	1-3/8	—
Distributor Connections (in. OD)	7/8	7/8	—	7/8	1-1/8	1-1/8	—	7/8	7/8	1-3/8	7/8	1-1/8	1-1/8	—
Distributor Nozzle Size*	G-2	G-4/G-3	—	G-3	E-12/E-10	E-12/E-10	—	G-2.5/G-2	G-6	C-15	G-3	E-12/E-10	E-12/E-10	—
Single Circuit Coils														
No. of TXVs	1	1	—	1	—	—	—	1	1	—	1	—	—	—
Suction Connections (in. OD)	1-1/8	1-3/8	—	1-3/8	—	—	—	1-1/8	1-5/8	—	1-3/8	—	—	—
Distributor Connections (in. OD)	7/8	1-1/8	—	1-1/8	—	—	—	7/8	1-3/8	—	1-1/8	—	—	—
Distributor Nozzle Size	G-4	E-12	—	E-10	—	—	—	G-6	C-15	—	E-10	—	—	—
6-Row Coil														
Face Split Coils														
No. of TXVs	2	2	2	—	2	4	—	—	2	2	—	2	4	—
Suction Connections (in. OD)	7/8	1-1/8	1-3/8	—	1-3/8	1-3/8	—	—	1-1/8	1-5/8	—	1-3/8	1-3/8	—
Distributor Connections (in. OD)	7/8	7/8	1-1/8	—	1-1/8	1-1/8	—	—	7/8	1-3/8	—	1-1/8	1-1/8	—
Distributor Nozzle Size*	G-2	G-4/G-3	E-12	—	E-12/E-10	E-12/E-10	—	—	G-6	C-15	—	E-12/E-10	E-12/E-10	—
Intertwined Row Split Coils														
No. of TXVs	2	2	2	—	2	4	—	—	2	2	—	2	4	—
Suction Connections (in. OD)	7/8	1-1/8	1-3/8	—	1-3/8	1-3/8	—	—	1-1/8	1-5/8	—	1-3/8	1-3/8	—
Distributor Connections (in. OD)	7/8	7/8	1-1/8	—	1-1/8	1-1/8	—	—	7/8	1-3/8	—	1-1/8	1-1/8	—
Distributor Nozzle Size*	G-2	G-4/G-3	E-12	—	E-12/E-10	E-12/E-10	—	—	G-6	C-15	—	E-12/E-10	E-12/E-10	—
Single Circuit Coils														
No. of TXVs	1	1	—	—	—	—	—	—	1	—	—	—	—	—
Suction Connections (in. OD)	1-1/8	1-3/8	—	—	—	—	—	—	1-5/8	—	—	—	—	—
Distributor Connections (in. OD)	7/8	1-1/8	—	—	—	—	—	—	1-3/8	—	—	—	—	—
Distributor Nozzle Size	G-4	E-12	—	—	—	—	—	—	C-15	—	—	—	—	—
8-Row Coil														
Face Split Coils														
No. of TXVs	—	2	2	—	2	4	8	—	2	2	—	2	4	8
Suction Connections (in. OD)	—	1-1/8	1-3/8	—	1-3/8	1-3/8	1-3/8	—	1-1/8	1-5/8	—	1-3/8	1-3/8	1-3/8
Distributor Connections (in. OD)	—	7/8	1-1/8	—	1-1/8	1-1/8	1-1/8	—	7/8	1-3/8	—	1-1/8	1-1/8	1-1/8
Distributor Nozzle Size*	—	G-4/G-3	E-12	—	E-12/E-10	E-12/E-10	E-12/E-10	—	G-6	C-15	—	E-12/E-10	E-12/E-10	E-12/E-10
Intertwined Row Split Coils														
No. of TXVs	—	2	2	—	2	4	8	—	2	2	—	2	4	8
Suction Connections (in. OD)	—	1-1/8	1-3/8	—	1-3/8	1-3/8	1-3/8	—	1-1/8	1-5/8	—	1-3/8	1-3/8	1-3/8
Distributor Connections (in. OD)	—	7/8	1-1/8	—	1-1/8	1-1/8	1-1/8	—	7/8	1-3/8	—	1-1/8	1-1/8	1-1/8
Distributor Nozzle Size*	—	G-4/G-3	E-12	—	E-12/E-10	E-12/E-10	E-12/E-10	—	G-6	C-15	—	E-12/E-10	E-12/E-10	E-12/E-10
Single Circuit Coils														
No. of TXVs	—	1	—	—	—	—	—	—	1	—	—	—	—	—
Suction Connections (in. OD)	—	1-3/8	—	—	—	—	—	—	1-5/8	—	—	—	—	—
Distributor Connections (in. OD)	—	1-1/8	—	—	—	—	—	—	1-3/8	—	—	—	—	—
Distributor Nozzle Size	—	E-12	—	—	—	—	—	—	C-15	—	—	—	—	—

LEGEND

TXV — Thermostatic Expansion Valve (Field Supplied)

*When 2 nozzle sizes are listed, the smaller nozzle should be located on the upper distributor.

NOTE: Factory-supplied distributors have factory-selected nozzle sizes as shown. If necessary, replace factory-supplied nozzles with field-supplied and field-installed nozzles. Consult ***AHU*Builder®** software selection program for correct nozzle selection.

Table 11 — Direct-Expansion Circuiting Data (cont)
Large Face Area Coils (cont)

39M UNIT SIZE	14W			16T								17W		
CIRCUITING TYPE	Quarter	Half	Full	Quarter		Half		Full		Double		Half	Full	Double
Airflow (cfm) at 500 fpm	7,170			7,587								8,464		
Total Face Area (sq ft)	14.3			15.2								16.9		
Tubes in Face	28	28	28	22	24	22	24	22	24	22	24	30	30	30
Tube Length (in.)	59	59	59	38	38	38	38	38	38	38	38	65	65	65
No. of Circuits - Total	7	14	28	6	6	11	12	22	24	44	48	15	30	60
4-Row Coil				Upper	Lower	Upper	Lower	Upper	Lower	Upper	Lower			
Face Split Coils														
No. of TXVs	2	2	2	2	2	2	2	2	2	—	—	2	2	—
Suction Connections (in. OD)	7/8	1-1/8	1-5/8	7/8	7/8	1-1/8	1-1/8	1-3/8	1-3/8	—	—	1-1/8	1-5/8	—
Distributor Connections (in. OD)	7/8	7/8	1-3/8	7/8	7/8	7/8	7/8	1-1/8	1-3/8	—	—	7/8	1-3/8	—
Distributor Nozzle Size*	G-2.5/G-2	G-6	C-15	G-2	G-2	G-4/G-3	G-4	E-12	C-12	—	—	G-8/G-6	C-15	—
Intertwined Row Split Coils														
No. of TXVs	2	2	2	2	2	2	2	2	2	—	—	2	2	—
Suction Connections (in. OD)	7/8	1-1/8	1-5/8	7/8	7/8	1-1/8	1-1/8	1-3/8	1-3/8	—	—	1-1/8	1-5/8	—
Distributor Connections (in. OD)	7/8	7/8	1-3/8	7/8	7/8	7/8	7/8	1-1/8	1-3/8	—	—	7/8	1-3/8	—
Distributor Nozzle Size*	G-2.5/G-2	G-6	C-15	G-2	G-2	G-4/G-3	G-4	E-12	C-12	—	—	G-8/G-6	C-15	—
Single Circuit Coils														
No. of TXVs	1	1	—	1	1	1	1	—	—	—	—	1	—	—
Suction Connections (in. OD)	1-1/8	1-5/8	—	1-1/8	1-1/8	1-3/8	1-3/8	—	—	—	—	1-5/8	—	—
Distributor Connections (in. OD)	7/8	1-3/8	—	7/8	7/8	1-1/8	1-3/8	—	—	—	—	1-3/8	—	—
Distributor Nozzle Size	G-6	C-15	—	G-4	G-4	E-12	C-12	—	—	—	—	C-15	—	—
6-Row Coil														
Face Split Coils														
No. of TXVs	—	2	2	—	—	2	2	2	2	—	—	2	2	—
Suction Connections (in. OD)	—	1-1/8	1-5/8	—	—	1-1/8	1-1/8	1-3/8	1-3/8	—	—	1-1/8	1-5/8	—
Distributor Connections (in. OD)	—	7/8	1-3/8	—	—	7/8	7/8	1-1/8	1-3/8	—	—	7/8	1-3/8	—
Distributor Nozzle Size*	—	G-6	C-15	—	—	G-4 / G-3	G-4	E-12	C-12	—	—	G-8 / G-6	C-15	—
Intertwined Row Split Coils														
No. of TXVs	—	2	2	—	—	2	2	2	2	—	—	2	2	—
Suction Connections (in. OD)	—	1-1/8	1-5/8	—	—	1-1/8	1-1/8	1-3/8	1-3/8	—	—	1-1/8	1-5/8	—
Distributor Connections (in. OD)	—	7/8	1-3/8	—	—	7/8	7/8	1-1/8	1-3/8	—	—	7/8	1-3/8	—
Distributor Nozzle Size*	—	G-6	C-15	—	—	G-4 / G-3	G-4	E-12	C-12	—	—	G-8 / G-6	C-15	—
Single Circuit Coils														
No. of TXVs	—	1	—	—	—	1	1	—	—	—	—	1	—	—
Suction Connections (in. OD)	—	1-5/8	—	—	—	1-3/8	1-3/8	—	—	—	—	1-5/8	—	—
Distributor Connections (in. OD)	—	1-3/8	—	—	—	1-1/8	1-3/8	—	—	—	—	1-3/8	—	—
Distributor Nozzle Size	—	C-15	—	—	—	E-12	C-12	—	—	—	—	C-15	—	—
8-Row Coil														
Face Split Coils														
No. of TXVs	—	2	2	—	—	2	2	2	2	4	4	2	2	4
Suction Connections (in. OD)	—	1-1/8	1-5/8	—	—	1-1/8	1-1/8	1-3/8	1-3/8	1-3/8	1-3/8	1-1/8	1-5/8	1-5/8
Distributor Connections (in. OD)	—	7/8	1-3/8	—	—	7/8	7/8	1-1/8	1-3/8	1-1/8	1-3/8	7/8	1-3/8	1-3/8
Distributor Nozzle Size*	—	G-6	C-15	—	—	G-4 / G-3	G-4	E-12	C-12	E-12	C-12	G-8 / G-6	C-15	C-15
Intertwined Row Split Coils														
No. of TXVs	—	2	2	—	—	2	2	2	2	4	4	2	2	4
Suction Connections (in. OD)	—	1-1/8	1-5/8	—	—	1-1/8	1-1/8	1-3/8	1-3/8	1-3/8	1-3/8	1-1/8	1-5/8	1-5/8
Distributor Connections (in. OD)	—	7/8	1-3/8	—	—	7/8	7/8	1-1/8	1-3/8	1-1/8	1-3/8	7/8	1-3/8	1-3/8
Distributor Nozzle Size*	—	G-6	C-15	—	—	G-4 / G-3	G-4	E-12	C-12	E-12	C-12	G-8 / G-6	C-15	C-15
Single Circuit Coils														
No. of TXVs	—	1	—	—	—	—	—	—	—	—	—	1	—	—
Suction Connections (in. OD)	—	1-5/8	—	—	—	—	—	—	—	—	—	1-5/8	—	—
Distributor Connections (in. OD)	—	1-3/8	—	—	—	—	—	—	—	—	—	1-3/8	—	—
Distributor Nozzle Size	—	C-15	—	—	—	—	—	—	—	—	—	C-15	—	—

LEGEND

TXV — Thermostatic Expansion Valve (Field Supplied)

*When 2 nozzle sizes are listed, the smaller nozzle should be located on the upper distributor.

NOTE: Factory-supplied distributors have factory-selected nozzle sizes as shown. If necessary, replace factory-supplied nozzles with field-supplied and installed nozzles. Consult ***AHU*Builder®** software selection program for correct nozzle selection.

Table 11 — Direct-Expansion Circuiting Data (cont)
Large Face Area Coils (cont)

39M UNIT SIZE	18T						21W			22T						25W		
CIRCUITING TYPE	Half		Full		Double		Half	Full	Double	Half		Full		Double		Half	Full	Double
Airflow (cfm) at 500 fpm	8,898						10,720			11,016						12,205		
Total Face Area (sq ft)	17.8						21.4			22.0						24.4		
Tubes in Face	24	26	24	26	24	26	38	38	38	26	28	26	28	26	28	38	38	38
Tube Length (in.)	41	41	41	41	41	41	65	65	65	47	47	47	47	47	47	72	72	72
No. of Circuits - Total	12	13	24	26	48	52	19	38	76	13	14	26	28	52	56	19	38	76
4-Row Coil	Upper	Lower	Upper	Lower	Upper	Lower				Upper	Lower	Upper	Lower	Upper	Lower			
Face Split Coils																		
No. of TXVs	2	2	2	2	—	—	2	2	—	2	2	2	2	—	—	2	2	—
Suction Connections (in. OD)	1-1/8	1-1/8	1-3/8	1-5/8	—	—	1-3/8	1-5/8	—	1-1/8	1-1/8	1-5/8	1-5/8	—	—	1-3/8	1-5/8	—
Distributor Connections (in. OD)	7/8	7/8	1-3/8	1-3/8	—	—	1-1/8	1-3/8	—	7/8	7/8	1-3/8	1-3/8	—	—	1-1/8	1-3/8	—
Distributor Nozzle Size*	G-4	G-6/G-4	C-12	C-12	—	—	E-10/E-8	C-20	—	G-6/G-4	G-6	C-12	C-15	—	—	E-10/E-8	C-20	—
Intertwined Row Split Coils																		
No. of TXVs	2	2	2	2	—	—	2	2	—	2	2	2	2	—	—	2	2	—
Suction Connections (in. OD)	1-1/8	1-1/8	1-3/8	1-5/8	—	—	1-3/8	1-5/8	—	1-1/8	1-1/8	1-5/8	1-5/8	—	—	1-3/8	1-5/8	—
Distributor Connections (in. OD)	7/8	7/8	1-3/8	1-3/8	—	—	1-1/8	1-3/8	—	7/8	7/8	1-3/8	1-3/8	—	—	1-1/8	1-3/8	—
Distributor Nozzle Size*	G-4	G-6/G-4	C-12	C-12	—	—	E-10/E-8	C-20	—	G-6/G-4	G-6	C-12	C-15	—	—	E-10/E-8	C-20	—
Single Circuit Coils																		
No. of TXVs	—	—	—	—	—	—	—	—	—	—	—	—	—	—	—	—	—	—
Suction Connections (in. OD)	—	—	—	—	—	—	—	—	—	—	—	—	—	—	—	—	—	—
Distributor Connections (in. OD)	—	—	—	—	—	—	—	—	—	—	—	—	—	—	—	—	—	—
Distributor Nozzle Size	—	—	—	—	—	—	—	—	—	—	—	—	—	—	—	—	—	—
6-Row Coil																		
Face Split Coils																		
No. of TXVs	2	2	2	2	—	—	2	2	—	2	2	2	2	—	—	2	2	—
Suction Connections (in. OD)	1-1/8	1-1/8	1-3/8	1-5/8	—	—	1-3/8	1-5/8	—	1-1/8	1-1/8	1-5/8	1-5/8	—	—	1-3/8	1-5/8	—
Distributor Connections (in. OD)	7/8	7/8	1-3/8	1-3/8	—	—	1-1/8	1-3/8	—	7/8	7/8	1-3/8	1-3/8	—	—	1-1/8	1-3/8	—
Distributor Nozzle Size*	G-4	G-6/G-4	C-12	C-12	—	—	E-10/E-8	C-20	—	G-6/G-4	G-6	C-12	C-15	—	—	E-10/E-8	C-20	—
Intertwined Row Split Coils																		
No. of TXVs	2	2	2	2	—	—	2	2	—	2	2	2	2	—	—	2	2	—
Suction Connections (in. OD)	1-1/8	1-1/8	1-3/8	1-5/8	—	—	1-3/8	1-5/8	—	1-1/8	1-1/8	1-5/8	1-5/8	—	—	1-3/8	1-5/8	—
Distributor Connections (in. OD)	7/8	7/8	1-3/8	1-3/8	—	—	1-1/8	1-3/8	—	7/8	7/8	1-3/8	1-3/8	—	—	1-1/8	1-3/8	—
Distributor Nozzle Size*	G-4	G-6/G-4	C-12	C-12	—	—	E-10/E-8	C-20	—	G-6/G-4	G-6	C-12	C-15	—	—	E-10/E-8	C-20	—
Single Circuit Coils																		
No. of TXVs	—	—	—	—	—	—	—	—	—	—	—	—	—	—	—	—	—	—
Suction Connections (in. OD)	—	—	—	—	—	—	—	—	—	—	—	—	—	—	—	—	—	—
Distributor Connections (in. OD)	—	—	—	—	—	—	—	—	—	—	—	—	—	—	—	—	—	—
Distributor Nozzle Size	—	—	—	—	—	—	—	—	—	—	—	—	—	—	—	—	—	—
8-Row Coil																		
Face Split Coils																		
No. of TXVs	2	2	2	2	4	4	2	2	4	2	2	2	2	4	4	2	2	4
Suction Connections (in. OD)	1-1/8	1-1/8	1-3/8	1-5/8	1-3/8	1-5/8	1-3/8	1-5/8	1-5/8	1-1/8	1-1/8	1-5/8	1-5/8	1-5/8	1-5/8	1-3/8	1-5/8	1-5/8
Distributor Connections (in. OD)	7/8	7/8	1-3/8	1-3/8	1-3/8	1-3/8	1-1/8	1-3/8	1-3/8	7/8	7/8	1-3/8	1-3/8	1-3/8	1-3/8	1-1/8	1-3/8	1-3/8
Distributor Nozzle Size*	G-4	G-6/G-4	C-12	C-12	C-12	C-12	E-10/E-8	C-20	C-20	G-6/G-4	G-6	C-12	C-15	C-12	C-15	E-10/E-8	C-20	C-20
Intertwined Row Split Coils																		
No. of TXVs	2	2	2	2	4	4	2	2	4	2	2	2	2	4	4	2	2	4
Suction Connections (in. OD)	1-1/8	1-1/8	1-3/8	1-5/8	1-3/8	1-5/8	1-3/8	1-5/8	1-5/8	1-1/8	1-1/8	1-5/8	1-5/8	1-5/8	1-5/8	1-3/8	1-5/8	1-5/8
Distributor Connections (in. OD)	7/8	7/8	1-3/8	1-3/8	1-3/8	1-3/8	1-1/8	1-3/8	1-3/8	7/8	7/8	1-3/8	1-3/8	1-3/8	1-3/8	1-1/8	1-3/8	1-3/8
Distributor Nozzle Size*	G-4	G-6/G-4	C-12	C-12	C-12	C-12	E-10/E-8	C-20	C-20	G-6/G-4	G-6	C-12	C-15	C-12	C-15	E-10/E-8	C-20	C-20
Single Circuit Coils																		
No. of TXVs	—	—	—	—	—	—	—	—	—	—	—	—	—	—	—	—	—	—
Suction Connections (in. OD)	—	—	—	—	—	—	—	—	—	—	—	—	—	—	—	—	—	—
Distributor Connections (in. OD)	—	—	—	—	—	—	—	—	—	—	—	—	—	—	—	—	—	—
Distributor Nozzle Size	—	—	—	—	—	—	—	—	—	—	—	—	—	—	—	—	—	—

LEGEND

TXV — Thermostatic Expansion Valve (Field Supplied)

*When 2 nozzle sizes are listed, the smaller nozzle should be located on the upper distributor.

NOTE: Factory-supplied distributors have factory-selected nozzle sizes as shown. If necessary, replace factory-supplied nozzles with field-supplied and installed nozzles. Consult ***AHU*Builder®** software selection program for correct nozzle selection.

Table 11 — Direct-Expansion Circuiting Data (cont)

Large Face Area Coils (cont)

39M UNIT SIZE	25T						30W			30T					
CIRCUITING TYPE	Half		Full		Double		Half	Full	Double	Half		Full		Double	
Airflow (cfm) at 500 fpm	12,335						15,174			14,852					
Total Face Area (sq ft)	24.7						30.3			29.7					
Tubes in Face	28	30	28	30	28	30	38	38	38	28	30	28	30	28	30
Tube Length (in.)	49	49	49	49	49	49	92	92	92	59	59	59	59	59	59
No. of Circuits - Total	14	15	28	30	56	60	19	38	76	14	15	28	30	56	60
4-Row Coil	Upper	Lower	Upper	Lower	Upper	Lower				Upper	Lower	Upper	Lower	Upper	Lower
Face Split Coils															
No. of TXVs	2	2	2	2	—	—	2	2	—	2	2	2	2	—	—
Suction Connections (in. OD)	1-1/8	1-1/8	1-5/8	1-5/8	—	—	1-3/8	1-5/8	—	1-1/8	1-1/8	1-5/8	1-5/8	—	—
Distributor Connections (in. OD)	7/8	7/8	1-3/8	1-3/8	—	—	1-1/8	1-3/8	—	7/8	7/8	1-3/8	1-3/8	—	—
Distributor Nozzle Size*	G-6	G-8/G-6	C-15	C-15	—	—	E-10/E-8	C-20	—	G-6	G-8/G-6	C-15	C-15	—	—
Intertwined Row Split Coils															
No. of TXVs	2	2	2	2	—	—	2	2	—	2	2	2	2	—	—
Suction Connections (in. OD)	1-1/8	1-1/8	1-5/8	1-5/8	—	—	1-3/8	1-5/8	—	1-1/8	1-1/8	1-5/8	1-5/8	—	—
Distributor Connections (in. OD)	7/8	7/8	1-3/8	1-3/8	—	—	1-1/8	1-3/8	—	7/8	7/8	1-3/8	1-3/8	—	—
Distributor Nozzle Size*	G-6	G-8/G-6	C-15	C-15	—	—	E-10/E-8	C-20	—	G-6	G-8/G-6	C-15	C-15	—	—
Single Circuit Coils															
No. of TXVs	—	—	—	—	—	—	—	—	—	—	—	—	—	—	—
Suction Connections (in. OD)	—	—	—	—	—	—	—	—	—	—	—	—	—	—	—
Distributor Connections (in. OD)	—	—	—	—	—	—	—	—	—	—	—	—	—	—	—
Distributor Nozzle Size	—	—	—	—	—	—	—	—	—	—	—	—	—	—	—
6-Row Coil															
Face Split Coils															
No. of TXVs	2	2	2	2	—	—	2	2	—	2	2	2	2	—	—
Suction Connections (in. OD)	1-1/8	1-1/8	1-5/8	1-5/8	—	—	1-3/8	1-5/8	—	1-1/8	1-1/8	1-5/8	1-5/8	—	—
Distributor Connections (in. OD)	7/8	7/8	1-3/8	1-3/8	—	—	1-1/8	1-3/8	—	7/8	7/8	1-3/8	1-3/8	—	—
Distributor Nozzle Size*	G-6	G-8/G-6	C-15	C-15	—	—	E-10/E-8	C-20	—	G-6	G-8/G-6	C-15	C-15	—	—
Intertwined Row Split Coils															
No. of TXVs	2	2	2	2	—	—	2	2	—	2	2	2	2	—	—
Suction Connections (in. OD)	1-1/8	1-1/8	1-5/8	1-5/8	—	—	1-3/8	1-5/8	—	1-1/8	1-1/8	1-5/8	1-5/8	—	—
Distributor Connections (in. OD)	7/8	7/8	1-3/8	1-3/8	—	—	1-1/8	1-3/8	—	7/8	7/8	1-3/8	1-3/8	—	—
Distributor Nozzle Size*	G-6	G-8/G-6	C-15	C-15	—	—	E-10/E-8	C-20	—	G-6	G-8/G-6	C-15	C-15	—	—
Single Circuit Coils															
No. of TXVs	—	—	—	—	—	—	—	—	—	—	—	—	—	—	—
Suction Connections (in. OD)	—	—	—	—	—	—	—	—	—	—	—	—	—	—	—
Distributor Connections (in. OD)	—	—	—	—	—	—	—	—	—	—	—	—	—	—	—
Distributor Nozzle Size	—	—	—	—	—	—	—	—	—	—	—	—	—	—	—
8-Row Coil															
Face Split Coils															
No. of TXVs	2	2	2	2	4	4	2	2	4	2	2	2	2	4	4
Suction Connections (in. OD)	1-1/8	1-1/8	1-5/8	1-5/8	1-5/8	1-5/8	1-3/8	1-5/8	1-5/8	1-1/8	1-1/8	1-5/8	1-5/8	1-5/8	1-5/8
Distributor Connections (in. OD)	7/8	7/8	1-3/8	1-3/8	1-3/8	1-3/8	1-1/8	1-3/8	1-3/8	7/8	7/8	1-3/8	1-3/8	1-3/8	1-3/8
Distributor Nozzle Size*	G-6	G-8/G-6	C-15	C-15	C-15	C-15	E-10/E-8	C-20	C-20	G-6	G-8/G-6	C-15	C-15	C-15	C-15
Intertwined Row Split Coils															
No. of TXVs	2	2	2	2	4	4	2	2	4	2	2	2	2	4	4
Suction Connections (in. OD)	1-1/8	1-1/8	1-5/8	1-5/8	1-5/8	1-5/8	1-3/8	1-5/8	1-5/8	1-1/8	1-1/8	1-5/8	1-5/8	1-5/8	1-5/8
Distributor Connections (in. OD)	7/8	7/8	1-3/8	1-3/8	1-3/8	1-3/8	1-1/8	1-3/8	1-3/8	7/8	7/8	1-3/8	1-3/8	1-3/8	1-3/8
Distributor Nozzle Size*	G-6	G-8/G-6	C-15	C-15	C-15	C-15	E-10/E-8	C-20	C-20	G-6	G-8/G-6	C-15	C-15	C-15	C-15
Single Circuit Coils															
No. of TXVs	—	—	—	—	—	—	—	—	—	—	—	—	—	—	—
Suction Connections (in. OD)	—	—	—	—	—	—	—	—	—	—	—	—	—	—	—
Distributor Connections (in. OD)	—	—	—	—	—	—	—	—	—	—	—	—	—	—	—
Distributor Nozzle Size	—	—	—	—	—	—	—	—	—	—	—	—	—	—	—

LEGEND

TXV — Thermostatic Expansion Valve (Field Supplied)

*When 2 nozzle sizes are listed, the smaller nozzle should be located on the upper distributor.

NOTE: Factory-supplied distributors have factory-selected nozzle sizes as shown. If necessary, replace factory-supplied nozzles with field-supplied and installed nozzles. Consult ***AHU*Builder®** software selection program for correct nozzle selection.

Table 11 — Direct-Expansion Circuiting Data (cont)

Large Face Area Coils (cont)

39M UNIT SIZE	35T						36W		37T						40W			
CIRCUITING TYPE	Half		Full		Double		Full	Double	Half		Full		Double		Full		Double	
Airflow (cfm) at 500 fpm	17,448						18,438		18,438						20,000			
Total Face Area (sq ft)	34.9						36.9		36.9						40.0			
Tubes in Face	30	30	30	30	30	30	44	44	36	36	36	36	36	36	24	24	24	24
Tube Length (in.)	67	67	67	67	67	67	59	59	59	59	59	59	59	59	96	96	96	96
No. of Circuits - Total	15	15	30	30	60	60	44	88	18	18	36	36	72	72	24	24	48	48
4-Row Coil	Upper	Lower	Upper	Lower	Upper	Lower			Upper	Lower	Upper	Lower	Upper	Lower	Upper	Lower	Upper	Lower
Face Split Coils																		
No. of TXVs	2	2	2	2	—	—	4	—	2	2	2	2	—	—	2	2	—	—
Suction Connections (in. OD)	1-1/8	1-1/8	1-5/8	1-5/8	—	—	1-3/8	—	1-3/8	1-3/8	1-5/8	1-5/8	—	—	1-3/8	1-3/8	—	—
Distributor Connections (in. OD)	7/8	7/8	1-3/8	1-3/8	—	—	1-1/8	—	1-1/8	1-1/8	1-3/8	1-3/8	—	—	1-3/8	1-3/8	—	—
Distributor Nozzle Size*	G-8/G-6	G-8/G-6	C-15	C-15	—	—	E-12	—	E-8	E-8	C-17	C-17	—	—	C-12	C-12	—	—
Intertwined Row Split Coils																		
No. of TXVs	2	2	2	2	—	—	4	—	2	2	2	2	—	—	2	2	—	—
Suction Connections (in. OD)	1-1/8	1-1/8	1-5/8	1-5/8	—	—	1-3/8	—	1-3/8	1-3/8	1-5/8	1-5/8	—	—	1-3/8	1-3/8	—	—
Distributor Connections (in. OD)	7/8	7/8	1-3/8	1-3/8	—	—	1-1/8	—	1-1/8	1-1/8	1-3/8	1-3/8	—	—	1-3/8	1-3/8	—	—
Distributor Nozzle Size*	G-8/G-6	G-8/G-6	C-15	C-15	—	—	E-12	—	E-8	E-8	C-17	C-17	—	—	C-12	C-12	—	—
Single Circuit Coils																		
No. of TXVs	—	—	—	—	—	—	—	—	—	—	—	—	—	—	—	—	—	—
Suction Connections (in. OD)	—	—	—	—	—	—	—	—	—	—	—	—	—	—	—	—	—	—
Distributor Connections (in. OD)	—	—	—	—	—	—	—	—	—	—	—	—	—	—	—	—	—	—
Distributor Nozzle Size	—	—	—	—	—	—	—	—	—	—	—	—	—	—	—	—	—	—
6-Row Coil																		
Face Split Coils																		
No. of TXVs	2	2	2	2	—	—	4	—	2	2	2	2	—	—	2	2	—	—
Suction Connections (in. OD)	1-1/8	1-1/8	1-5/8	1-5/8	—	—	1-3/8	—	1-3/8	1-3/8	1-5/8	1-5/8	—	—	1-3/8	1-3/8	—	—
Distributor Connections (in. OD)	7/8	7/8	1-3/8	1-3/8	—	—	1-1/8	—	1-1/8	1-1/8	1-3/8	1-3/8	—	—	1-3/8	1-3/8	—	—
Distributor Nozzle Size*	G-8/G-6	G-8/G-6	C-15	C-15	—	—	E-12	—	E-8	E-8	C-17	C-17	—	—	C-12	C-12	—	—
Intertwined Row Split Coils																		
No. of TXVs	2	2	2	2	—	—	4	—	2	2	2	2	—	—	2	2	—	—
Suction Connections (in. OD)	1-1/8	1-1/8	1-5/8	1-5/8	—	—	1-3/8	—	1-3/8	1-3/8	1-5/8	1-5/8	—	—	1-3/8	1-3/8	—	—
Distributor Connections (in. OD)	7/8	7/8	1-3/8	1-3/8	—	—	1-1/8	—	1-1/8	1-1/8	1-3/8	1-3/8	—	—	1-3/8	1-3/8	—	—
Distributor Nozzle Size*	G-8/G-6	G-8/G-6	C-15	C-15	—	—	E-12	—	E-8	E-8	C-17	C-17	—	—	C-12	C-12	—	—
Single Circuit Coils																		
No. of TXVs	—	—	—	—	—	—	—	—	—	—	—	—	—	—	—	—	—	—
Suction Connections (in. OD)	—	—	—	—	—	—	—	—	—	—	—	—	—	—	—	—	—	—
Distributor Connections (in. OD)	—	—	—	—	—	—	—	—	—	—	—	—	—	—	—	—	—	—
Distributor Nozzle Size	—	—	—	—	—	—	—	—	—	—	—	—	—	—	—	—	—	—
8-Row Coil																		
Face Split Coils																		
No. of TXVs	2	2	2	2	4	4	4	8	2	2	2	2	4	4	2	2	4	4
Suction Connections (in. OD)	1-1/8	1-1/8	1-5/8	1-5/8	1-5/8	1-5/8	1-3/8	1-3/8	1-3/8	1-3/8	1-5/8	1-5/8	1-5/8	1-5/8	1-3/8	1-3/8	1-3/8	1-3/8
Distributor Connections (in. OD)	7/8	7/8	1-3/8	1-3/8	1-3/8	1-3/8	1-1/8	1-1/8	1-1/8	1-1/8	1-3/8	1-3/8	1-3/8	1-3/8	1-3/8	1-3/8	1-3/8	1-3/8
Distributor Nozzle Size*	G-8/G-6	G-8/G-6	C-15	C-15	C-15	C-15	E-12	E-12	E-8	E-8	C-17	C-17	C-17	C-17	C-12	C-12	C-12	C-12
Intertwined Row Split Coils																		
No. of TXVs	2	2	2	2	4	4	4	8	2	2	2	2	4	4	2	2	4	4
Suction Connections (in. OD)	1-1/8	1-1/8	1-5/8	1-5/8	1-5/8	1-5/8	1-3/8	1-3/8	1-3/8	1-3/8	1-5/8	1-5/8	1-5/8	1-5/8	1-3/8	1-3/8	1-3/8	1-3/8
Distributor Connections (in. OD)	7/8	7/8	1-3/8	1-3/8	1-3/8	1-3/8	1-1/8	1-1/8	1-1/8	1-1/8	1-3/8	1-3/8	1-3/8	1-3/8	1-3/8	1-3/8	1-3/8	1-3/8
Distributor Nozzle Size*	G-8/G-6	G-8/G-6	C-15	C-15	C-15	C-15	E-12	E-12	E-8	E-8	C-17	C-17	C-17	C-17	C-12	C-12	C-12	C-12
Single Circuit Coils																		
No. of TXVs	—	—	—	—	—	—	—	—	—	—	—	—	—	—	—	—	—	—
Suction Connections (in. OD)	—	—	—	—	—	—	—	—	—	—	—	—	—	—	—	—	—	—
Distributor Connections (in. OD)	—	—	—	—	—	—	—	—	—	—	—	—	—	—	—	—	—	—
Distributor Nozzle Size	—	—	—	—	—	—	—	—	—	—	—	—	—	—	—	—	—	—

LEGEND

TXV — Thermostatic Expansion Valve (Field Supplied)

*When 2 nozzle sizes are listed, the smaller nozzle should be located on the upper distributor.

NOTE: Factory-supplied distributors have factory-selected nozzle sizes as shown. If necessary, replace factory-supplied nozzles with field-supplied and installed nozzles. Consult ***AHU*Builder®** software selection program for correct nozzle selection.

Table 11 — Direct-Expansion Circuiting Data (cont)
Large Face Area Coils (cont)

39M UNIT SIZE	42T						50W				51T						
CIRCUITING TYPE	Half		Full		Double		Full		Double		Quarter	Half		Full		Double	
Airflow (cfm) at 500 fpm	20,938						25,278				25,313						
Total Face Area (sq ft)	41.9						50.6				50.6						
Tubes in Face	36	36	36	36	36	36	28	28	28	28	—	36	36	36	36	36	36
Tube Length (in.)	67	67	67	67	67	67	104	104	104	104	—	81	81	81	81	81	81
No. of Circuits - Total	18	18	36	36	72	72	28	28	56	56	—	18	18	36	36	72	72
4-Row Coil	Upper	Lower	Upper	Lower	Upper	Lower	Upper	Lower	Upper	Lower		Upper	Lower	Upper	Lower	Upper	Lower
Face Split Coils																	
No. of TXVs	2	2	2	2	—	—	2	2	—	—	—	2	2	2	2	—	—
Suction Connections (in. OD)	1-3/8	1-3/8	1-5/8	1-5/8	—	—	1-5/8	1-5/8	—	—	—	1-3/8	1-3/8	1-5/8	1-5/8	—	—
Distributor Connections (in. OD)	1-1/8	1-1/8	1-3/8	1-3/8	—	—	1-3/8	1-3/8	—	—	—	1-1/8	1-1/8	1-3/8	1-3/8	—	—
Distributor Nozzle Size	E-8	E-8	C-17	C-17	—	—	C-15	C-15	—	—	—	E-8	E-8	C-17	C-17	—	—
Intertwined Row Split Coils																	
No. of TXVs	2	2	2	2	—	—	2	2	—	—	—	2	2	2	2	—	—
Suction Connections (in. OD)	1-3/8	1-3/8	1-5/8	1-5/8	—	—	1-5/8	1-5/8	—	—	—	1-3/8	1-3/8	1-5/8	1-5/8	—	—
Distributor Connections (in. OD)	1-1/8	1-1/8	1-3/8	1-3/8	—	—	1-3/8	1-3/8	—	—	—	1-1/8	1-1/8	1-3/8	1-3/8	—	—
Distributor Nozzle Size	E-8	E-8	C-17	C-17	—	—	C-15	C-15	—	—	—	E-8	E-8	C-17	C-17	—	—
Single Circuit Coils	—	—	—	—													
No. of TXVs	—	—	—	—	—	—	—	—	—	—	—	—	—	—	—	—	—
Suction Connections (in. OD)	—	—	—	—	—	—	—	—	—	—	—	—	—	—	—	—	—
Distributor Connections (in. OD)	—	—	—	—	—	—	—	—	—	—	—	—	—	—	—	—	—
Distributor Nozzle Size	—	—	—	—	—	—	—	—	—	—	—	—	—	—	—	—	—
6-Row Coil																	
Face Split Coils																	
No. of TXVs	2	2	2	2	—	—	2	2	—	—	—	2	2	2	2	—	—
Suction Connections (in. OD)	1-3/8	1-3/8	1-5/8	1-5/8	—	—	1-5/8	1-5/8	—	—	—	1-3/8	1-3/8	1-5/8	1-5/8	—	—
Distributor Connections (in. OD)	1-1/8	1-1/8	1-3/8	1-3/8	—	—	1-3/8	1-3/8	—	—	—	1-1/8	1-1/8	1-3/8	1-3/8	—	—
Distributor Nozzle Size	E-8	E-8	C-17	C-17	—	—	C-15	C-15	—	—	—	E-8	E-8	C-17	C-17	—	—
Intertwined Row Split Coils																	
No. of TXVs	2	2	2	2	—	—	2	2	—	—	—	2	2	2	2	—	—
Suction Connections (in. OD)	1-3/8	1-3/8	1-5/8	1-5/8	—	—	1-5/8	1-5/8	—	—	—	1-3/8	1-3/8	1-5/8	1-5/8	—	—
Distributor Connections (in. OD)	1-1/8	1-1/8	1-3/8	1-3/8	—	—	1-3/8	1-3/8	—	—	—	1-1/8	1-1/8	1-3/8	1-3/8	—	—
Distributor Nozzle Size	E-8	E-8	C-17	C-17	—	—	C-15	C-15	—	—	—	E-8	E-8	C-17	C-17	—	—
Single Circuit Coils																	
No. of TXVs	—	—	—	—	—	—	—	—	—	—	—	—	—	—	—	—	—
Suction Connections (in. OD)	—	—	—	—	—	—	—	—	—	—	—	—	—	—	—	—	—
Distributor Connections (in. OD)	—	—	—	—	—	—	—	—	—	—	—	—	—	—	—	—	—
Distributor Nozzle Size	—	—	—	—	—	—	—	—	—	—	—	—	—	—	—	—	—
8-Row Coil																	
Face Split Coils																	
No. of TXVs	2	2	2	2	4	4	2	2	4	4	—	2	2	2	2	4	4
Suction Connections (in. OD)	1-3/8	1-3/8	1-5/8	1-5/8	1-5/8	1-5/8	1-5/8	1-5/8	1-5/8	1-5/8	—	1-3/8	1-3/8	1-5/8	1-5/8	1-5/8	1-5/8
Distributor Connections (in. OD)	1-1/8	1-1/8	1-3/8	1-3/8	1-3/8	1-3/8	1-3/8	1-3/8	1-3/8	1-3/8	—	1-1/8	1-1/8	1-3/8	1-3/8	1-3/8	1-3/8
Distributor Nozzle Size	E-8	E-8	C-17	C-17	C-17	C-17	C-15	C-15	C-15	C-15	—	E-8	E-8	C-17	C-17	C-17	C-17
Intertwined Row Split Coils																	
No. of TXVs	2	2	2	2	4	4	2	2	4	4	—	2	2	2	2	4	4
Suction Connections (in. OD)	1-3/8	1-3/8	1-5/8	1-5/8	1-5/8	1-5/8	1-5/8	1-5/8	1-5/8	1-5/8	—	1-3/8	1-3/8	1-5/8	1-5/8	1-5/8	1-5/8
Distributor Connections (in. OD)	1-1/8	1-1/8	1-3/8	1-3/8	1-3/8	1-3/8	1-3/8	1-3/8	1-3/8	1-3/8	—	1-1/8	1-1/8	1-3/8	1-3/8	1-3/8	1-3/8
Distributor Nozzle Size	E-8	E-8	C-17	C-17	C-17	C-17	C-15	C-15	C-15	C-15	—	E-8	E-8	C-17	C-17	C-17	C-17
Single Circuit Coils																	
No. of TXVs	—	—	—	—	—	—	—	—	—	—	—	—	—	—	—	—	—
Suction Connections (in. OD)	—	—	—	—	—	—	—	—	—	—	—	—	—	—	—	—	—
Distributor Connections (in. OD)	—	—	—	—	—	—	—	—	—	—	—	—	—	—	—	—	—
Distributor Nozzle Size	—	—	—	—	—	—	—	—	—	—	—	—	—	—	—	—	—

LEGEND

TXV — Thermostatic Expansion Valve (Field Supplied)

*When 2 nozzle sizes are listed, the smaller nozzle should be located on the upper distributor.

NOTE: Factory-supplied distributors have factory-selected nozzle sizes as shown. If necessary, replace factory-supplied nozzles with field-supplied and field-installed nozzles. Consult ***AHU*Builder®** software selection program for correct nozzle selection.

Table 11 — Direct-Expansion Circuiting Data (cont)
Large Face Area Coils (cont)

39M UNIT SIZE	58T				61W				72W				85W			
CIRCUITING TYPE	Full		Double		Full		Double		Full		Double		Full		Double	
Airflow (cfm) at 500 fpm	28,828				30,694				35,625				41,892			
Total Face Area (sq ft)	57.7				61.4				71.3				83.8			
Tubes in Face	40	42	40	42	34	34	34	34	38	38	38	38	38	38	38	38
Tube Length (in.)	81	81	81	81	104	104	104	104	108	108	108	108	127	127	127	127
No. of Circuits - Total	40	42	80	84	34	34	68	68	38	40	76	80	38	40	76	80
4-Row Coil	Upper	Lower	Upper	Lower	Upper	Lower	Upper	Lower	Upper	Lower	Upper	Lower	Upper	Lower	Upper	Lower
Face Split Coils																
No. of TXVs	4	4	—	—	2	2	—	—	2	2	—	—	2	2	—	
Suction Connections (in. OD)	1-3/8	1-3/8	—	—	1-5/8	1-5/8	—	—	1-5/8	1-5/8	—	—	1-5/8	1-5/8	—	
Distributor Connections (in. OD)	1-1/8	1-1/8	—	—	1-3/8	1-3/8	—	—	1-3/8	1-3/8	—	—	1-3/8	1-3/8	—	—
Distributor Nozzle Size*	E-10	E-12/ E-10	—	—	C-17	C-17	—	—	C-20	C-20	—	—	C-20	C-20	—	—
Intertwined Row Split Coils																
No. of TXVs	4	4	—	—	2	2	—	—	2	2	—	—	2	2	—	—
Suction Connections (in. OD)	1-3/8	1-3/8	—	—	1-5/8	1-5/8	—	—	1-5/8	1-5/8	—	—	1-5/8	1-5/8	—	—
Distributor Connections (in. OD)	1-1/8	1-1/8	—	—	1-3/8	1-3/8	—	—	1-3/8	1-3/8	—	—	1-3/8	1-3/8	—	—
Distributor Nozzle Size*	E-10	E-12/ E-10	—	—	C-17	C-17	—	—	C-20	C-20	—	—	C-20	C-20	—	—
Single Circuit Coils					—	—	—	—	—	—	—	—	—	—	—	—
No. of TXVs	—	—	—	—	—	—	—	—	—	—	—	—	—	—	—	—
Suction Connections (in. OD)	—	—	—	—	—	—	—	—	—	—	—	—	—	—	—	—
Distributor Connections (in. OD)	—	—	—	—	—	—	—	—	—	—	—	—	—	—	—	—
Distributor Nozzle Size	—	—	—	—	—	—	—	—	—	—	—	—	—	—	—	—
6-Row Coil																
Face Split Coils																
No. of TXVs	4	4	—	—	2	2	—	—	2	2	—	—	2	2	—	—
Suction Connections (in. OD)	1-3/8	1-3/8	—	—	1-5/8	1-5/8	—	—	1-5/8	1-5/8	—	—	1-5/8	1-5/8	—	—
Distributor Connections (in. OD)	1-1/8	1-1/8	—	—	1-3/8	1-3/8	—	—	1-3/8	1-3/8	—	—	1-3/8	1-3/8	—	—
Distributor Nozzle Size*	E-10	E-12/ E-10	—	—	C-17	C-17	—	—	C-20	C-20	—	—	C-20	C-20	—	—
Intertwined Row Split Coils																
No. of TXVs	4	4	—	—	2	2	—	—	2	2	—	—	2	2	—	—
Suction Connections (in. OD)	1-3/8	1-3/8	—	—	1-5/8	1-5/8	—	—	1-5/8	1-5/8	—	—	1-5/8	1-5/8	—	—
Distributor Connections (in. OD)	1-1/8	1-1/8	—	—	1-3/8	1-3/8	—	—	1-3/8	1-3/8	—	—	1-3/8	1-3/8	—	—
Distributor Nozzle Size*	E-10	E-12/ E-10	—	—	C-17	C-17	—	—	C-20	C-20	—	—	C-20	C-20	—	—
Single Circuit Coils					—	—	—	—	—	—	—	—	—	—	—	—
No. of TXVs	—	—	—	—	—	—	—	—	—	—	—	—	—	—	—	—
Suction Connections (in. OD)	—	—	—	—	—	—	—	—	—	—	—	—	—	—	—	—
Distributor Connections (in. OD)	—	—	—	—	—	—	—	—	—	—	—	—	—	—	—	—
Distributor Nozzle Size	—	—	—	—	—	—	—	—	—	—	—	—	—	—	—	—
8-Row Coil																
Face Split Coils																
No. of TXVs	4	4	8	8	2	2	4	4	2	2	4	4	2	2	4	4
Suction Connections (in. OD)	1-3/8	1-3/8	1-3/8	1-3/8	1-5/8	1-5/8	1-5/8	1-5/8	1-5/8	1-5/8	1-5/8	1-5/8	1-5/8	1-5/8	1-5/8	1-5/8
Distributor Connections (in. OD)	1-1/8	1-1/8	1-1/8	1-1/8	1-3/8	1-3/8	1-3/8	1-3/8	1-3/8	1-3/8	1-3/8	1-3/8	1-3/8	1-3/8	1-3/8	1-3/8
Distributor Nozzle Size*	E-10	E-12/ E-10	E-10	E-12/ E-10	C-17	C-17	C-17	C-17	C-20	C-20	C-20	C-20	C-20	C-20	C-20	C-20
Intertwined Row Split Coils																
No. of TXVs	4	4	8	8	2	2	4	4	2	2	4	4	2	2	4	4
Suction Connections (in. OD)	1-3/8	1-3/8	1-3/8	1-3/8	1-5/8	1-5/8	1-5/8	1-5/8	1-5/8	1-5/8	1-5/8	1-5/8	1-5/8	1-5/8	1-5/8	1-5/8
Distributor Connections (in. OD)	1-1/8	1-1/8	1-1/8	1-1/8	1-3/8	1-3/8	1-3/8	1-3/8	1-3/8	1-3/8	1-3/8	1-3/8	1-3/8	1-3/8	1-3/8	1-3/8
Distributor Nozzle Size*	E-10	E-12/ E-10	E-10	E-12/ E-10	C-17	C-17	C-17	C-17	C-20	C-20	C-20	C-20	C-20	C-20	C-20	C-20
Single Circuit Coils					—	—	—	—	—	—	—	—	—	—	—	—
No. of TXVs	—	—	—	—	—	—	—	—	—	—	—	—	—	—	—	—
Suction Connections (in. OD)	—	—	—	—	—	—	—	—	—	—	—	—	—	—	—	—
Distributor Connections (in. OD)	—	—	—	—	—	—	—	—	—	—	—	—	—	—	—	—
Distributor Nozzle Size	—	—	—	—	—	—	—	—	—	—	—	—	—	—	—	—

LEGEND

TXV — Thermostatic Expansion Valve (Field Supplied)

*When 2 nozzle sizes are listed, the smaller nozzle should be located on the upper distributor.

NOTE: Factory-supplied distributors have factory-selected nozzle sizes as shown. If necessary, replace factory-supplied nozzles with field-supplied and field-installed nozzles. Consult ***AHU*Builder®** software selection program for correct nozzle selection.

Table 11 — Direct-Expansion Circuiting Data (cont)
Large Face Area Coils (cont)

39M UNIT SIZE	96W				110W			
CIRCUITING TYPE	Full		Double		Full		Double	
Airflow (cfm) at 500 fpm	48,125				55,000			
Total Face Area (sq ft)	96.3				110.0			
Tubes in Face	44	44	44	44	44	44	44	44
Tube Length (in.)	126	126	126	126	144	144	144	144
No. of Circuits - Total	44	44	88	88	44	44	88	88
4-Row Coil	Upper	Lower	Upper	Lower	Upper	Lower	Upper	Lower
Face Split Coils								
No. of TXVs	4	4	—	—	4	4	—	—
Suction Connections (in. OD)	1-3/8	1-3/8	—	—	1-3/8	1-3/8	—	—
Distributor Connections (in. OD)	1-1/8	1-1/8	—	—	1-1/8	1-1/8	—	—
Distributor Nozzle Size	E-12	E-12	—	—	E-12	E-12	—	—
Intertwined Row Split Coils								
No. of TXVs	4	4	—	—	4	4	—	—
Suction Connections (in. OD)	1-3/8	1-3/8	—	—	1-3/8	1-3/8	—	—
Distributor Connections (in. OD)	1-1/8	1-1/8	—	—	1-1/8	1-1/8	—	—
Distributor Nozzle Size	E-12	E-12	—	—	E-12	E-12	—	—
Single Circuit Coils	—	—	—	—	—	—	—	—
No. of TXVs	—	—	—	—	—	—	—	—
Suction Connections (in. OD)	—	—	—	—	—	—	—	—
Distributor Connections (in. OD)	—	—	—	—	—	—	—	—
Distributor Nozzle Size	—	—	—	—	—	—	—	—
6-Row Coil								
Face Split Coils								
No. of TXVs	4	4	—	—	4	4	—	—
Suction Connections (in. OD)	1-3/8	1-3/8	—	—	1-3/8	1-3/8	—	—
Distributor Connections (in. OD)	1-1/8	1-1/8	—	—	1-1/8	1-1/8	—	—
Distributor Nozzle Size	E-12	E-12	—	—	E-12	E-12	—	—
Intertwined Row Split Coils								
No. of TXVs	4	4	—	—	4	4	—	—
Suction Connections (in. OD)	1-3/8	1-3/8	—	—	1-3/8	1-3/8	—	—
Distributor Connections (in. OD)	1-1/8	1-1/8	—	—	1-1/8	1-1/8	—	—
Distributor Nozzle Size	E-12	E-12	—	—	E-12	E-12	—	—
Single Circuit Coils	—	—	—	—	—	—	—	—
No. of TXVs	—	—	—	—	—	—	—	—
Suction Connections (in. OD)	—	—	—	—	—	—	—	—
Distributor Connections (in. OD)	—	—	—	—	—	—	—	—
Distributor Nozzle Size	—	—	—	—	—	—	—	—
8-Row Coil								
Face Split Coils								
No. of TXVs	4	4	8	8	4	4	8	8
Suction Connections (in. OD)	1-3/8	1-3/8	1-3/8	1-3/8	1-3/8	1-3/8	1-3/8	1-3/8
Distributor Connections (in. OD)	1-1/8	1-1/8	1-1/8	1-1/8	1-1/8	1-1/8	1-1/8	1-1/8
Distributor Nozzle Size	E-12	E-12	E-12	E-12	E-12	E-12	E-12	E-12
Intertwined Row Split Coils								
No. of TXVs	4	4	8	8	4	4	8	8
Suction Connections (in. OD)	1-3/8	1-3/8	1-3/8	1-3/8	1-3/8	1-3/8	1-3/8	1-3/8
Distributor Connections (in. OD)	1-1/8	1-1/8	1-1/8	1-1/8	1-1/8	1-1/8	1-1/8	1-1/8
Distributor Nozzle Size	E-12	E-12	E-12	E-12	E-12	E-12	E-12	E-12
Single Circuit Coils	—	—	—	—	—	—	—	—
No. of TXVs	—	—	—	—	—	—	—	—
Suction Connections (in. OD)	—	—	—	—	—	—	—	—
Distributor Connections (in. OD)	—	—	—	—	—	—	—	—
Distributor Nozzle Size	—	—	—	—	—	—	—	—

LEGEND

TXV — Thermostatic Expansion Valve (Field Supplied)

*When 2 nozzle sizes are listed, the smaller nozzle should be located on the upper distributor.

NOTE: Factory-supplied distributors have factory-selected nozzle sizes as shown. If necessary, replace factory-supplied nozzles with field-supplied and field-installed nozzles. Consult ***AHU*Builder®** software selection program for correct nozzle selection.

Table 12 — 1/2-in. Water Coil Connection Sizes

FACE AREA	ROWS	CIRCUIT TYPE	39M UNIT SIZE																	
			03W	06W	07T	08W	09T	10W	11T	12W	12T	14W	16T	17W	18T	21W	22T	25W	25T	30W
			Nozzle Size (in. MPT)																	
LARGE	1, 2	HALF/FULL	1.5	1.5	1.5	1.5	1.5	1.5	1.5	1.5	1.5	1.5	1.5	2.5	2.5	2.5	2.5	2.5	2.5	2.5
	4	HALF/FULL	1.5	1.5	1.5	1.5	1.5	1.5	1.5	1.5	1.5	1.5	1.5	2.5	2.5	2.5	2.5	2.5	2.5	2.5
		DOUBLE	2.5	2.5	2.5	2.5	2.5	2.5	2.5	2.5	2.5	2.5	2.5	2.5	2.5	2.5	2.5	2.5	2.5	2.5
	6, 8, 10	HALF	1.5	1.5	1.5	1.5	1.5	1.5	1.5	1.5	1.5	2.5	2.5	2.5	2.5	2.5	2.5	2.5	2.5	2.5
		FULL	1.5	1.5	1.5	1.5	1.5	1.5	1.5	1.5	1.5	2.5	2.5	2.5	2.5	2.5	2.5	2.5	2.5	2.5
		DOUBLE	2.5	2.5	2.5	2.5	2.5	2.5	2.5	2.5	2.5	2.5	(2)2.5	3	(2)2.5	3	(2)2.5	3	(2)3	3
MEDIUM	1, 2	HALF/FULL	1.5	1.5	1.5	1.5	1.5	1.5	1.5	1.5	1.5	1.5	1.5	1.5	1.5	2.5	2.5	2.5	2.5	2.5
	4	HALF/FULL	1.5	1.5	1.5	1.5	1.5	1.5	1.5	1.5	1.5	1.5	1.5	1.5	1.5	2.5	2.5	2.5	2.5	2.5
		DOUBLE	2.5	2.5	2.5	2.5	2.5	2.5	2.5	2.5	2.5	2.5	2.5	2.5	2.5	2.5	2.5	2.5	2.5	2.5
	6, 8, 10	HALF	1.5	1.5	1.5	1.5	1.5	1.5	1.5	1.5	1.5	1.5	1.5	1.5	1.5	2.5	2.5	2.5	2.5	2.5
		FULL	1.5	1.5	1.5	1.5	1.5	1.5	1.5	1.5	1.5	1.5	1.5	1.5	1.5	2.5	2.5	2.5	2.5	2.5
		DOUBLE	2.5	2.5	2.5	2.5	2.5	2.5	2.5	2.5	2.5	2.5	3	2.5	3	3	3	3	3	3
BYPASS	1, 2	HALF/FULL	1.5	1.5	1.5	1.5	1.5	1.5	1.5	1.5	1.5	1.5	1.5	1.5	1.5	1.5	1.5	1.5	1.5	1.5
	4	HALF/FULL	1.5	1.5	1.5	1.5	1.5	1.5	1.5	1.5	1.5	1.5	1.5	1.5	1.5	1.5	1.5	1.5	1.5	1.5
		DOUBLE	2.5	2.5	2.5	2.5	2.5	2.5	2.5	2.5	2.5	2.5	2.5	2.5	2.5	2.5	2.5	2.5	2.5	2.5
	6, 8, 10	HALF	1.5	1.5	1.5	1.5	1.5	1.5	1.5	1.5	1.5	1.5	1.5	1.5	1.5	2.5	2.5	2.5	2.5	2.5
		FULL	1.5	1.5	1.5	1.5	1.5	1.5	1.5	1.5	1.5	1.5	1.5	1.5	1.5	2.5	2.5	2.5	2.5	2.5
		DOUBLE	2.5	2.5	2.5	2.5	2.5	2.5	2.5	2.5	2.5	2.5	3	2.5	3	2.5	3	2.5	3	2.5
SMALL	1, 2	HALF/FULL	—	1.5	1.5	1.5	1.5	1.5	1.5	1.5	1.5	1.5	1.5	1.5	1.5	1.5	1.5	1.5	1.5	1.5
	4	HALF/FULL	—	1.5	1.5	1.5	1.5	1.5	1.5	1.5	1.5	1.5	1.5	1.5	1.5	1.5	1.5	1.5	1.5	1.5
		DOUBLE	2.5	2.5	2.5	2.5	2.5	2.5	2.5	2.5	2.5	2.5	2.5	2.5	2.5	2.5	2.5	2.5	2.5	2.5

FACE AREA	ROWS	CIRCUIT TYPE	39M UNIT SIZE												
			30T	35T	36W	37T	40W	42T	50W	51T	58T	61W	72W	85W	96W	110W
			Nozzle Size (in. MPT)													
LARGE	1, 2	HALF/FULL	2.5	2.5	2.5	2.5	(2)1.5	(2)1.5	(2)1.5	(2)1.5	(2)1.5	(2)2.5	(2)2.5	(2)2.5	(2)2.5	(2)2.5
	4	HALF/FULL	2.5	2.5	2.5	2.5	(2)1.5	(2)1.5	(2)1.5	(2)1.5	(2)1.5	(2)2.5	(2)2.5	(2)2.5	(2)2.5	(2)2.5
		DOUBLE	2.5	2.5	2.5	2.5	(2)2.5	(2)2.5	(2)2.5	(2)2.5	(2)2.5	(2)2.5	(2)2.5	(2)2.5	(2)2.5	(2)2.5
	6, 8, 10	HALF	2.5	2.5	2.5	2.5	(2)1.5	(2)2.5	(2)2.5	(2)2.5	(2)2.5	(2)2.5	(2)2.5	(2)2.5	(2)2.5	(2)2.5
		FULL	2.5	3	3	3	(2)1.5	(2)2.5	(2)2.5	(2)2.5	(2)2.5	(2)2.5	(2)3	(2)3	(2)3	(2)3
		DOUBLE	(2)3	(2)3	3	(2)3	(2)2.5	(2)2.5	(2)2.5	(2)2.5	(2)2.5	(2)3	(2)3	(2)3	(2)3	(2)3
MEDIUM	1, 2	HALF/FULL	2.5	2.5	2.5	2.5	2.5	2.5	2.5	2.5	2.5	(2)1.5	(2)2.5	(2)2.5	(2)2.5	(2)2.5
	4	HALF/FULL	2.5	2.5	2.5	2.5	2.5	2.5	2.5	2.5	2.5	(2)1.5	(2)2.5	(2)2.5	(2)2.5	(2)2.5
		DOUBLE	2.5	2.5	2.5	2.5	2.5	2.5	2.5	2.5	2.5	(2)2.5	(2)2.5	(2)2.5	(2)2.5	(2)2.5
	6, 8, 10	HALF	2.5	2.5	2.5	2.5	2.5	2.5	2.5	2.5	2.5	(2)2.5	(2)2.5	(2)2.5	(2)2.5	(2)2.5
		FULL	2.5	2.5	2.5	2.5	3	3	3	3	3	(2)2.5	(2)2.5	(2)2.5	(2)2.5	(2)2.5
		DOUBLE	3	(2)2.5	3	(2)3	3	3	3	3	3	(2)2.5	(2)3	(2)3	(2)3	(2)3
BYPASS	1, 2	HALF/FULL	1.5	2.5	2.5	2.5	2.5	2.5	2.5	2.5	2.5	2.5	(2)1.5	(2)1.5	(2)1.5	(2)1.5
	4	HALF/FULL	1.5	2.5	2.5	2.5	2.5	2.5	2.5	2.5	2.5	2.5	(2)1.5	(2)1.5	(2)1.5	(2)1.5
		DOUBLE	2.5	2.5	2.5	2.5	2.5	2.5	2.5	2.5	2.5	2.5	(2)2.5	(2)2.5	(2)2.5	(2)2.5
	6, 8, 10	HALF	2.5	2.5	2.5	2.5	2.5	2.5	2.5	2.5	2.5	2.5	(2)2.5	(2)2.5	(2)2.5	(2)2.5
		FULL	2.5	2.5	2.5	2.5	2.5	2.5	2.5	2.5	2.5	2.5	(2)2.5	(2)2.5	(2)2.5	(2)2.5
		DOUBLE	3	3	3	(2)2.5	3	3	3	3	3	3	(2)2.5	(2)2.5	(2)2.5	(2)2.5
SMALL	1, 2	HALF/FULL	1.5	1.5	1.5	1.5	1.5	1.5	1.5	1.5	1.5	2.5	—	—	—	—
	4	HALF/FULL	1.5	1.5	1.5	1.5	1.5	1.5	1.5	1.5	1.5	2.5	—	—	—	—
		DOUBLE	2.5	2.5	2.5	2.5	2.5	2.5	2.5	2.5	2.5	2.5	—	—	—	—

NOTES:
1. Large face area sizes 40, 50 and 61 and medium face area size 61 units have 2 sets of water coil connections.
2. All 72-110 sized units have 2 sets of water coil connections.

Table 13 — 5/8-in. Water Coil Connection Sizes

FACE AREA	ROWS	CIRCUIT TYPE	39M UNIT SIZE																	
			03W	06W	07T	08W	09T	10W	11T	12W	12T	14W	16T	17W	18T	21W	22T	25W	25T	30W
			Nozzle Size (in. MPT)																	
LARGE	1	HALF	1.5	1.5	1.5	1.5	1.5	1.5	1.5	1.5	1.5	1.5	1.5	1.5	1.5	2	2	2	2	2
	2	HALF	1.5	1.5	1.5	1.5	1.5	1.5	1.5	1.5	1.5	1.5	1.5	1.5	1.5	2	2	2	2	2
		FULL	2	2	2	2	2	2	2	2.5	2.5	2.5	2.5	2.5	2.5	2.5	2.5	2.5	2.5	2.5
	4	HALF	1.5	1.5	1.5	1.5	1.5	1.5	1.5	1.5	1.5	1.5	1.5	1.5	1.5	2	2	2	2	2
		FULL	2	2	2	2	2	2	2	2.5	2.5	2.5	2.5	2.5	2.5	2.5	2.5	2.5	2.5	2.5
	6, 8	FULL	2	2	2	2	2	2	2	2.5	2.5	2.5	2.5	2.5	2.5	3	3	3	3	3
		DOUBLE	2.5	2.5	2.5	2.5	2.5	2.5	2.5	2.5	2.5	2.5	2.5	2.5	2.5	3	3	3	3	3
MEDIUM	1	HALF	1.5	1.5	1.5	1.5	1.5	1.5	1.5	1.5	1.5	1.5	1.5	1.5	1.5	2	2	2	2	2
	2	HALF	1.5	1.5	1.5	1.5	1.5	1.5	1.5	1.5	1.5	1.5	1.5	1.5	1.5	2	2	2	2	2
		FULL	1.5	1.5	2	2	2	2	2	2	2	2.5	2.5	2.5	2.5	2.5	2.5	2.5	2.5	2.5
	4	HALF	1.5	1.5	1.5	1.5	1.5	1.5	1.5	1.5	1.5	1.5	1.5	1.5	1.5	2	2	2	2	2
		FULL	1.5	1.5	2	2	2	2	2	2	2	2.5	2.5	2.5	2.5	2.5	2.5	2.5	2.5	2.5
	6, 8	FULL	1.5	1.5	2	2	2	2	2	2	2	2.5	2.5	2.5	2.5	2.5	2.5	2.5	2.5	2.5
		DOUBLE	2.5	2.5	2.5	2.5	2.5	2.5	2.5	2.5	2.5	2.5	2.5	2.5	2.5	2.5	2.5	2.5	2.5	2.5
BYPASS	1	HALF	1.5	1.5	1.5	1.5	1.5	1.5	1.5	1.5	1.5	1.5	1.5	1.5	1.5	1.5	1.5	1.5	1.5	1.5
	2	HALF	1.5	1.5	1.5	1.5	1.5	1.5	1.5	1.5	1.5	1.5	1.5	1.5	1.5	1.5	1.5	1.5	1.5	1.5
		FULL	1.5	1.5	1.5	1.5	1.5	1.5	1.5	2	2	2	2	2	2	2.5	2.5	2.5	2.5	2.5
	4	HALF	1.5	1.5	1.5	1.5	1.5	1.5	1.5	1.5	1.5	1.5	1.5	1.5	1.5	1.5	1.5	1.5	1.5	1.5
		FULL	1.5	1.5	1.5	1.5	1.5	1.5	1.5	2	2	2	2	2	2	2.5	2.5	2.5	2.5	2.5
	6, 8	FULL	1.5	1.5	1.5	1.5	1.5	1.5	1.5	2	2	2	2	2	2	2.5	2.5	2.5	2.5	2.5
		DOUBLE	2.5	2.5	2.5	2.5	2.5	2.5	2.5	2.5	2.5	2.5	2.5	2.5	2.5	2.5	2.5	2.5	2.5	2.5
SMALL	1	HALF	—	1.5	1.5	1.5	1.5	1.5	1.5	1.5	1.5	1.5	1.5	1.5	1.5	1.5	1.5	1.5	1.5	1.5
	2	HALF	—	1.5	1.5	1.5	1.5	1.5	1.5	1.5	1.5	1.5	1.5	1.5	1.5	1.5	1.5	1.5	1.5	1.5
		FULL	—	1.5	1.5	1.5	1.5	1.5	1.5	1.5	1.5	1.5	1.5	2	2	2	2	2	2	2

NOTES:
1. Large face area sizes 40, 50 and 61 and medium face area size 61 units have 2 sets of water coil connections.
2. All 72-110 sized units have 2 sets of water coil connections.
3. Where 2 pipe sizes are listed, the first number is the upper coil connection size; the second is the lower coil connection size.

Table 13 — 5/8-in. Water Coil Connection Sizes (cont)

FACE AREA	ROWS	CIRCUIT TYPE	39M UNIT SIZE													
			30T	35T	36W	37T	40W	42T	50W	51T	58T	61W	72W	85W	96W	110W
			Nozzle Size (in. MPT)													
LARGE	1	HALF	2	2	2	2	(2)1.5	(2)1.5	(2)1.5	(2)1.5	(2)1.5	(2)2	(2)2	(2)2	(2)2	(2)2
	2	HALF	2	2	2	2	(2)1.5	(2)1.5	(2)1.5	(2)1.5	(2)1.5	(2)2	(2)2	(2)2	(2)2	(2)2
		FULL	2.5	2.5	2.5	2.5	(2)2	(2)2	(2)2.5	(2)2	(2)2	(2)2.5	(2)2.5	(2)2.5	(2)2.5	(2)2.5
	4	HALF	2	2	2	2	(2)1.5	(2)1.5	(2)1.5	(2)1.5	(2)1.5	(2)2	(2)2	(2)2	(2)2	(2)2
		FULL	2.5	2.5	2.5	2.5	(2)2	(2)2	(2)2.5	(2)2	(2)2	(2)2.5	(2)3	(2)3	(2)3	(2)3
	6, 8	FULL	3	3	3	3	(2)2	(2)2	(2)2.5	(2)2	(2)2	(2)2.5	(2)4	(2)4	(2)4	(2)4
		DOUBLE	3	3	3	3	(2)2.5	(2)2.5	(2)2.5	(2)2.5	(2)2.5	(2)2.5	(2)4	(2)4	(2)4	(2)4
MEDIUM	1	HALF	2	2	2	2	2	2	2	2	2	(2)1.5	(2)2	(2)2	(2)2	(2)2
	2	HALF	2	2	2	2	2	2	2	2	2	(2)1.5	(2)2	(2)2	(2)2	(2)2
		FULL	2.5	2.5	2.5	2.5	2.5	2.5	2.5	2.5	2.5	(2)2	(2)2.5	(2)2.5	(2)2.5	(2)2.5
	4	HALF	2	2	2	2	2	2	2	2	2	(2)1.5	(2)2	(2)2	(2)2	(2)2
		FULL	2.5	2.5	2.5	2.5	2.5	2.5	2.5	2.5	2.5	(2)2	(2)3	(2)3	(2)3	(2)3
	6, 8	FULL	2.5	3	3	3	3	3	3	3	3	(2)2.5	(2)3	(2)3	(2)3	(2)3
		DOUBLE	2.5	3	3	3	3	3	3	3	3	(2)2.5	(2)3	(2)3	(2)3	(2)3
BYPASS	1	HALF	1.5	1.5	1.5	1.5	2	2	2	2	2	2	(2)1.5	(2)1.5	(2)1.5	(2)1.5
	2	HALF	1.5	1.5	1.5	1.5	2	2	2	2	2	2	(2)1.5	(2)1.5	(2)1.5	(2)1.5
		FULL	2.5	2.5	2.5	2.5	2.5	2.5	2.5	2.5	2.5	2.5	(2)2.5	(2)2.5	(2)2.5	(2)2.5
	4	HALF	1.5	1.5	1.5	1.5	2	2	2	2	2	2	(2)1.5	(2)1.5	(2)1.5	(2)1.5
		FULL	2.5	2.5	2.5	2.5	2.5	2.5	2.5	2.5	2.5	2.5	(2)3	(2)3	(2)3	(2)3
	6, 8	FULL	2.5	2.5	2.5	2.5	3	3	3	3	3	3	2.5/3.0	2.5/3.0	(2)3	(2)3
		DOUBLE	2.5	2.5	2.5	2.5	3	3	3	3	3	3	(2)3	(2)3	(2)3	(2)3
SMALL	1	HALF	1.5	1.5	1.5	1.5	1.5	1.5	1.5	1.5	1.5	2	—	—	—	—
	2	HALF	1.5	1.5	1.5	1.5	1.5	1.5	1.5	1.5	1.5	2	—	—	—	—
		FULL	2	2	2	2	2	2	2	2	2	2	—	—	—	—

NOTES:
1. Large face area sizes 40, 50 and 61 and medium face area size 61 units have 2 sets of water coil connections.
2. All 72-110 sized units have 2 sets of water coil connections.
3. Where 2 pipe sizes are listed, the first number is the upper coil connection size; the second is the lower coil connection size.

Table 14 — 1-in. Steam Coil Connection Sizes

FACE AREA	ROWS	CONNECTION	39M UNIT SIZE																
			03W	06W	07T	08W	09T	10W	11T	12W	12T	14W	16T	17W	18T	21W	22T	25W	25T	30W
			Nozzle Size (in. MPT)																	
ALL	ALL	INLET	2.5	2.5	2.5	2.5	2.5	2.5	2.5	2.5	2.5	2.5	2.5	2.5	2.5	2.5	2.5	2.5	2.5	2.5
		OUTLET	2.5	2.5	2.5	2.5	2.5	2.5	2.5	2.5	2.5	2.5	2.5	2.5	2.5	2.5	2.5	2.5	2.5	2.5

FACE AREA	ROWS	CONNECTION	39M UNIT SIZE												
			30T	35T	36W	37T	40W	42T	50W	51T	58T	61W	72W	85W	96W	110W
			Nozzle Size (in. MPT)													
ALL*	ALL	INLET	2.5	2.5	2.5	2.5	2.5	2.5	2.5	2.5	2.5	2.5	(2)2.5	(2)2.5	(2)2.5	(2)2.5
		OUTLET	2.5	2.5	2.5	2.5	2.5	2.5	2.5	2.5	2.5	2.5	(2)2.5	(2)2.5	(2)2.5	(2)2.5

NOTE: All 72-110 sized units have 2 sets of water coil connections.

*Large face area sizes 40, 50, and 61 and medium face area size 61 units have 2 sets of steam coil connections.

Table 15 — Hot Water — Integral Face and Bypass Coil Connection Sizes

ROWS	CONNECTION	39M UNIT SIZE																	
		03W	06W	07T	08W	09T	10W	11T	12W	12T	14W	16T	17W	18T	21W	22T	25W	25T	30W
		Nozzle Size (in. MPT)																	
1	INLET	-	2.5	2.5	2.5	2.5	2.5	2.5	2.5	2.5	2.5	2	2	2	2	2	2	2	2
	OUTLET	-	2.5	2.5	2.5	2.5	2.5	2.5	2.5	2.5	2.5	2	2	2	2	2	2	2	2
2	INLET	-	2.5	2.5	2.5	2.5	2.5	2.5	2.5	2.5	2.5	2	2	2	2	2	2	2	2.5
	OUTLET	-	2.5	2.5	2.5	2.5	2.5	2.5	2.5	2.5	2.5	2	2	2	2	2	2	2	2.5
3	INLET	-	2.5	2.5	2.5	2.5	2.5	2.5	2.5	2.5	2.5	2	2	2	2	2	2	2	2.5
	OUTLET	-	2.5	2.5	2.5	2.5	2.5	2.5	2.5	2.5	2.5	2	2	2	2	2	2	2	2.5

ROWS	CONNECTION	39M UNIT SIZE													
		30T	35T	36W	37T	40W	42T	50W	51T	58T	61W	72W	85W	96W	110W
		Nozzle Size (in. MPT)													
1	INLET	2	2	2	2	2	2	2	2	2	2	2	2	2	2
	OUTLET	2	2	2	2	2	2	2	2	2	2	2	2	2	2
2	INLET	2	2	2.5	2	2.5	2	2.5	2	2	2.5	2.5	3	3	3
	OUTLET	2	2	2.5	2	2.5	2	2.5	2	2	2.5	2.5	3	3	3
3	INLET	2	2	2.5	2	2.5	2	2.5	2	2	2.5	2.5	3	3	3
	OUTLET	2	2	2.5	2	2.5	2	2.5	2	2	2.5	2.5	3	3	3

Table 16 — Steam — Integral Face and Bypass Coil Connection Sizes

ROWS	CONNECTION	39M UNIT SIZE																	
		03W	06W	07T	08W	09T	10W	11T	12W	12T	14W	16T	17W	18T	21W	22T	25W	25T	30W
		Nozzle Size (in. MPT)																	
1	INLET	-	2.5	2.5	2.5	2.5	2.5	2.5	2.5	2.5	2.5	2.5	2.5	2.5	2.5	2.5	2.5	2.5	2.5
	OUTLET	-	2.5	2.5	2.5	2.5	2.5	2.5	2.5	2.5	2.5	2	2	2	2	2	2	2	2
2	INLET	-	2.5	2.5	2.5	2.5	2.5	2.5	2.5	2.5	2.5	2.5	3	2.5	3	2.5	3	2.5	3
	OUTLET	-	2.5	2.5	2.5	2.5	2.5	2.5	2.5	2.5	2.5	2	2.5	2	2.5	2	2.5	2	2.5
3	INLET	-	2.5	2.5	2.5	2.5	2.5	2.5	2.5	2.5	2.5	2.5	3	2.5	3	2.5	3	2.5	3
	OUTLET	-	2.5	2.5	2.5	2.5	2.5	2.5	2.5	2.5	2.5	2	2.5	2	2.5	2	2.5	2	2.5

ROWS	CONNECTION	39M UNIT SIZE													
		30T	35T	36W	37T	40W	42T	50W	51T	58T	61W	72W	85W	96W	110W
		Nozzle Size (in. MPT)													
1	INLET	2.5	2.5	2.5	2.5	2.5	2.5	3	2.5	2.5	3	3	3	3	3
	OUTLET	2	2	2	2	2	2	2.5	2	2	2.5	2.5	2.5	2.5	2.5
2	INLET	2.5	3	3	2.5	3	3	3	3	3	3	3	4	4	4
	OUTLET	2	2.5	2.5	2	2	2.5	2.5	2.5	2.5	2.5	2.5	3	3	3
3	INLET	2.5	3	3	2.5	3	3	3	3	3	3	3	4	4	4
	OUTLET	2	2.5	2.5	2	2.5	2.5	2.5	2.5	2.5	2.5	2.5	3	3	3

Table 17 — Operating Charge (Approximate) — Direct-Expansion Coil

ROWS	FACE AREA	39M UNIT SIZE																	
		03W	06W	07T	08W	09T	10W	11T	12W	12T	14W	16T	17W	18T	21W	22T	25W	25T	30W
		Refrigerant R-32 or R-454B (lb)																	
4	Large	1	3	3	4	4	4	5	5	5	6	7	7	8	9	10	11	11	13
	Medium	1	2	2	3	3	3	4	4	4	5	5	6	6	7	7	8	8	10
6	Large	2	4	5	6	7	7	8	9	9	10	12	12	13	15	16	18	18	22
	Medium	2	3	4	4	5	5	6	7	7	8	9	9	10	11	12	14	14	16
8	Large	3	6	7	8	9	10	11	12	12	15	17	18	19	22	23	26	26	31
	Medium	2	5	5	6	7	8	9	9	9	11	12	13	14	16	17	20	20	23

ROWS	FACE AREA	39M UNIT SIZE													
		30T	35T	36W	37T	40W	42T	50W	51T	58T	61W	72W	85W	96W	110W
		Refrigerant R-32 or R-454B (lb)													
4	Large	13	15	16	16	18	18	22	22	26	27	32	37	42	48
	Medium	10	12	12	12	13	14	17	17	19	20	24	28	32	36
6	Large	22	26	26	27	29	31	37	37	42	45	53	62	70	80
	Medium	16	19	20	20	22	23	27	28	32	33	39	47	53	60
8	Large	31	36	37	38	42	44	52	53	60	63	75	88	100	114
	Medium	23	27	28	29	31	33	39	40	45	48	56	66	75	86

Table 18 — Coil Volume (Gal. Water)

03W - 25W

39M UNIT SIZE	03W	06W	07T	08W	09T	10W	11T	12W	12T	14W	16T	17W	18T	21W	22T	25W
CHILLED WATER																
Large Face Area																
4-Row	1.4	2.2	2.9	2.8	3.4	3.7	4.4	4.7	4.8	5.3	5.7	6.2	6.6	7.8	8.1	8.9
6-Row	2.0	3.3	4.4	4.3	5.1	5.5	6.6	7.0	7.2	7.9	8.5	9.3	9.9	11.8	12.2	13.3
8-Row	2.7	4.4	5.8	5.7	6.9	7.3	8.8	9.3	9.6	10.5	11.3	12.4	13.2	15.7	16.3	17.8
10-Row	3.4	5.5	7.3	7.1	8.6	9.1	11.0	11.6	11.9	13.1	14.1	15.5	16.5	19.6	20.3	22.2
Medium Face Area																
4-Row	0.9	1.5	2.1	2.1	2.7	2.7	3.3	3.7	3.6	4.5	4.4	4.9	5.6	6.6	6.6	7.5
6-Row	1.4	2.3	3.1	3.1	4.0	4.0	5.0	5.5	5.5	6.8	6.6	7.4	8.3	9.9	9.9	11.2
8-Row	1.9	3.1	4.1	4.1	5.3	5.3	6.7	7.3	7.3	9.0	8.9	9.9	11.1	13.2	13.3	15.0
10-Row	2.4	3.9	5.2	5.2	6.7	6.6	8.4	9.1	9.1	11.3	11.1	12.4	13.9	16.5	16.6	18.7
Small Face Area																
4-Row	—	1.3	1.4	1.5	1.9	2.0	2.3	2.3	2.5	2.6	3.0	3.3	3.4	3.7	3.9	4.2
Bypass Face Area																
4-Row	0.8	1.3	1.7	1.8	2.3	2.3	2.9	3.3	3.2	3.8	3.7	4.5	4.2	5.8	5.1	6.5
6-Row	1.2	2.0	2.6	2.7	3.4	3.5	4.4	5.0	4.8	5.6	5.5	6.8	6.3	8.7	7.7	9.8
8-Row	1.6	2.7	3.4	3.6	4.6	4.7	5.9	6.6	6.4	7.5	7.4	9.1	8.5	11.5	10.2	13.1
10-Row	2.0	3.3	4.3	4.5	5.7	5.8	7.3	8.3	8.0	9.4	9.2	11.3	10.6	14.4	12.8	16.4
HOT WATER																
Large Face Area																
1-Row	0.3	0.6	0.7	0.7	0.9	0.9	1.1	1.2	1.2	1.3	1.4	1.5	1.7	2.0	2.0	2.2
2-Row	0.7	1.1	1.5	1.4	1.7	1.8	2.2	2.3	2.4	2.6	2.8	3.1	3.3	3.9	4.1	4.4
Medium Face Area																
1-Row	0.2	0.4	0.5	0.5	0.7	0.7	0.8	0.9	0.9	1.1	1.1	1.2	1.4	1.6	1.7	1.9
2-Row	0.5	0.8	1.0	1.0	1.3	1.3	107	1.8	1.8	2.3	2.2	2.5	2.8	3.3	3.3	3.7
Small Face Area																
1-Row	—	0.3	0.3	0.4	0.5	0.5	0.6	0.6	0.6	0.7	0.07	0.8	0.9	0.9	1.0	1.1
2-Row	—	0.7	0.7	0.8	1.0	1.0	1.1	1.2	1.3	1.3	1.5	1.6	1.7	1.9	2.0	2.1
Bypass Face Area																
1-Row	0.2	0.3	0.4	0.5	0.6	0.6	0.7	0.8	0.8	0.9	0.9	1.1	1.1	1.4	1.0	1.6
2-Row	0.4	0.7	0.9	0.9	1.1	1.2	1.5	1.7	1.6	1.9	1.8	2.3	2.1	2.9	2.0	3.3
Integral Bypass Face Area																
1-Row	—	0.3	0.4	0.5	0.5	0.6	0.6	0.6	0.7	0.7	0.5	0.6	0.5	0.8	0.9	0.8
2-Row	—	0.6	0.8	0.9	0.9	1.2	1.3	1.2	1.4	1.4	1.0	1.2	1.1	1.7	1.8	1.7
3-Row	—	0.8	1.2	1.4	1.4	1.8	1.9	1.8	2.1	2.0	1.5	1.9	1.6	2.5	2.6	2.5

NOTE: One gallon of water weighs 8.33 lb.

Table 18 — Coil Volume (Gal. Water) (cont)

25T-110W

39M UNIT SIZE	25T	30W	30T	35T	36W	37T	40W	42T	50W	51T	58T	61W	72W	85W	96W	110W
CHILLED WATER																
Large Face Area																
4-Row	9.1	11.0	10.9	12.7	13.3	13.9	14.5	15.3	18.3	18.4	20.9	22.2	26.2	30.7	34.7	39.6
6-Row	13.6	16.5	16.3	19.1	19.9	20.8	21.7	22.9	27.4	27.6	31.4	33.3	39.3	46.1	52.0	59.3
8-Row	18.2	22.0	21.8	25.5	26.5	27.8	29.0	30.6	36.5	36.8	41.9	44.4	52.3	61.5	69.3	79.1
10-Row	22.7	27.5	27.2	31.8	33.2	34.7	36.2	38.2	45.7	46.0	52.4	55.5	65.4	76.8	86.7	98.9
Medium Face Area																
4-Row	6.9	9.3	8.3	10.2	10.9	11.3	13.3	12.7	14.4	15.3	17.4	18.3	21.5	25.2	28.4	32.4
6-Row	10.4	13.9	12.4	15.3	16.3	16.9	19.9	19.1	21.5	23.0	26.1	27.4	32.2	37.8	42.6	48.5
8-Row	13.8	18.5	16.5	20.4	21.7	22.5	26.5	25.5	28.7	30.7	34.7	36.5	42.9	50.4	56.7	64.7
10-Row	17.7	23.1	20.6	25.5	27.1	28.1	33.2	31.8	35.9	38.3	43.4	45.7	53.7	63.0	70.9	80.9
Small Face Area																
4-Row	4.1	5.2	4.9	7.2	7.2	7.1	7.2	8.5	9.1	7.7	10.7	11.1	—	—	—	—
Bypass Face Area																
4-Row	6.0	8.1	7.1	8.5	9.0	9.0	10.9	9.8	11.7	11.7	13.8	14.4	16.8	19.7	22.1	25.2
6-Row	8.9	12.2	10.7	12.7	13.6	13.5	16.3	14.6	17.6	17.6	20.7	21.5	25.2	29.6	33.1	37.8
8-Row	11.9	16.2	14.3	17.0	18.1	18.0	21.7	19.5	23.5	23.5	27.6	28.7	33.6	39.4	44.1	50.3
10-Row	14.9	20.3	17.8	21.2	22.6	22.5	27.1	24.4	29.4	29.4	34.5	35.9	41.9	49.3	55.2	62.9
HOT WATER																
Large Face Area																
1-Row	2.3	2.7	2.7	3.2	3.3	3.5	3.6	3.8	4.6	4.6	5.2	5.5	6.5	7.7	8.7	9.9
2-Row	4.5	5.5	5.4	6.4	6.6	6.9	7.2	7.6	9.1	9.2	10.5	11.1	13.1	15.4	17.3	19.8
Medium Face Area																
1-Row	1.7	2.3	2.1	2.5	2.7	2.8	3.3	3.2	3.6	3.8	4.3	4.6	5.4	6.3	7.1	8.1
2-Row	3.5	4.6	4.1	5.1	5.4	5.6	6.6	6.4	7.2	7.7	8.7	9.1	10.7	12.6	14.2	16.2
Small Face Area																
1-Row	1.0	1.3	1.2	1.8	1.8	1.8	1.8	2.1	2.3	1.9	2.7	2.8	—	—	—	—
2-Row	2.0	2.6	2.4	3.6	3.6	3.6	3.6	4.2	4.6	3.8	5.4	5.5	—	—	—	—
Bypass Face Area																
1-Row	1.5	2.0	1.8	2.1	2.3	2.3	2.7	2.4	2.9	2.9	3.4	3.6	4.2	4.9	5.5	6.3
2-Row	3.0	4.1	3.6	4.2	4.5	4.5	5.4	4.9	5.9	5.9	6.9	7.2	8.4	9.9	11.0	12.6
Integral Bypass Face Area																
1-Row	1.0	1.2	1.3	1.7	1.6	1.6	1.8	2.0	2.4	2.4	2.8	3.0	3.4	4.3	4.7	5.6
2-Row	1.9	2.3	2.5	3.3	3.2	3.3	3.6	4.0	4.8	4.8	5.6	5.9	6.8	8.5	9.4	11.3
3-Row	2.9	3.5	3.8	5.0	4.7	4.9	5.3	6.0	7.1	7.3	8.4	8.9	10.3	12.8	14.1	16.9

NOTE: One gallon of water weighs 8.33 lb.

Table 19 — Dry Coil Weights (lb) — Sizes 03W–25W

COIL TYPE	FACE AREA	ROWS	FPI	39MUNITSIZE															
				03W	06W	07T	08W	09T	10W	11T	12W	12T	14W	16T	17W	18T	21W	22T	25W
CHILLED WATER OR DIRECT EXPANSION	LARGE	4	8	50	85	111	110	131	143	168	182	184	207	219	244	256	309	317	353
			11	52	89	115	115	136	149	175	190	191	215	228	254	267	322	330	367
			14	54	92	120	119	141	155	182	197	199	224	237	264	278	335	344	382
		6	8	70	120	155	154	183	200	235	255	257	289	306	341	359	432	444	494
			11	73	124	161	160	190	209	245	265	268	301	319	355	374	450	463	514
			14	76	129	168	167	198	217	255	276	279	313	331	370	389	468	481	535
		8	8	90	154	199	198	235	258	302	328	331	372	393	439	461	556	571	635
			11	94	160	207	206	245	268	315	341	345	387	410	457	480	579	595	661
			14	98	166	215	215	254	279	328	355	358	403	426	475	500	602	619	688
		10	8	107	182	236	235	278	305	358	388	392	441	466	520	547	659	677	753
			11	111	190	246	244	290	318	373	404	408	459	486	542	569	686	705	784
			14	116	197	255	254	302	331	388	421	425	477	505	563	592	714	733	815
	MEDIUM	4	8	35	60	78	80	102	104	128	143	140	177	171	195	215	260	259	296
			11	36	62	81	83	106	108	133	149	146	184	178	203	224	271	269	308
			14	38	64	85	87	110	113	139	155	152	192	185	211	233	282	280	321
		6	8	49	83	109	112	142	146	179	200	196	248	239	273	301	364	362	414
			11	51	87	114	117	148	152	187	209	204	258	249	284	314	379	377	432
			14	53	90	118	121	154	158	194	217	212	268	259	296	326	394	392	449
		8	8	63	107	140	144	183	187	230	257	252	319	308	351	387	468	465	533
			11	66	112	146	150	190	195	240	268	263	332	321	366	404	488	485	555
			14	68	116	152	156	198	203	250	279	273	345	333	380	420	507	504	577
		10	8	75	127	166	171	217	222	273	305	299	378	365	416	459	555	551	631
			11	78	132	173	178	226	231	284	318	311	393	380	433	478	578	574	658
			14	81	138	180	185	235	240	296	330	324	409	395	451	497	601	597	684
	SMALL	4	8	—	51	52	60	73	78	88	91	96	103	114	130	133	146	153	167
			11	—	53	54	63	76	81	92	95	100	108	119	135	139	152	159	173
			14	—	55	56	65	79	85	95	99	104	112	124	141	144	158	165	180
	BYPASS	4	8	30	51	65	70	87	91	112	130	123	148	143	179	164	228	200	259
			11	31	53	68	73	91	95	117	135	128	154	148	186	171	237	208	270
			14	33	55	70	76	94	99	121	141	133	160	154	194	178	246	216	281
		6	8	42	71	91	98	122	127	157	182	172	207	200	250	230	319	280	363
			11	44	74	95	102	127	133	163	190	179	215	208	261	239	332	291	378
			14	46	77	99	106	132	138	170	197	186	224	216	271	249	345	303	393
		8	8	54	92	117	126	157	164	202	234	221	266	257	322	295	410	360	466
			11	56	96	122	131	163	171	210	244	230	277	267	335	308	427	375	486
			14	59	99	127	137	170	177	218	254	239	288	278	349	320	444	390	505
		10	8	64	109	139	149	186	194	239	277	261	315	304	381	350	485	426	553
			11	67	113	144	156	193	202	249	289	272	328	317	397	364	506	444	576
			14	69	118	150	162	201	210	259	300	283	341	329	413	379	526	462	599
HOT WATER	LARGE	1	8	17	28	37	37	44	48	56	61	61	69	73	81	85	103	106	118
			11	17	30	38	38	45	50	58	63	64	72	76	85	89	107	110	122
			14	18	31	40	40	47	52	61	66	66	75	79	88	93	112	115	127
		2	8	23	40	52	51	61	67	78	85	86	96	102	114	120	144	148	165
			11	24	41	54	53	63	70	82	88	89	100	106	118	125	150	154	171
			14	25	43	56	56	66	72	85	92	93	104	110	123	130	156	160	178
	MEDIUM	1	8	12	20	26	27	34	35	43	48	47	59	57	65	72	87	86	99
			11	12	21	27	28	35	36	44	50	49	61	59	68	75	90	90	103
			14	13	21	28	29	37	38	46	52	51	64	62	70	78	94	93	107
		2	8	16	28	36	37	47	49	60	67	65	83	80	91	100	121	121	138
			11	17	29	38	39	49	51	62	70	68	86	83	95	105	126	126	144
			14	18	30	39	40	51	53	65	72	71	89	86	99	109	131	131	150
	SMALL	1	8	—	17	17	20	24	26	29	30	32	34	38	43	44	49	51	56
			11	—	18	18	21	25	27	31	32	33	36	40	45	46	51	53	58
			14	—	18	19	22	26	28	32	33	35	37	41	47	48	53	55	60
		2	8	—	24	24	28	34	36	41	42	45	48	53	61	62	68	71	78
			11	—	25	25	29	35	38	43	44	47	50	55	63	65	71	74	81
			14	—	26	26	30	37	39	44	46	49	52	58	66	67	74	77	84
	BYPASS	1	8	10	17	22	23	29	30	37	43	41	49	48	60	55	76	67	86
			11	10	18	23	24	30	32	39	45	43	51	49	62	57	79	69	90
			14	11	18	23	25	31	33	40	47	44	53	51	65	59	82	72	94
		2	8	14	24	30	33	41	42	52	61	57	69	67	83	77	106	93	121
			11	15	25	32	34	42	44	54	63	60	72	69	87	80	111	97	126
			14	15	26	33	35	44	46	57	66	62	75	72	90	83	115	101	131

Table 19 — Dry Coil Weights (lb) — Sizes 03W–25W (cont)

COIL TYPE	FACE AREA	ROWS	FPI	39MUNITSIZE															
				03W	06W	07T	08W	09T	10W	11T	12W	12T	14W	16T	17W	18T	21W	22T	25W
1-in. IDT STEAM	LARGE	1	6	23	40	52	51	61	67	78	85	86	96	102	114	120	144	148	165
			9	24	41	54	53	63	70	82	88	89	100	106	118	125	150	154	171
			12	25	43	56	56	66	72	85	92	93	104	110	123	130	156	160	178
	MEDIUM		6	16	28	36	37	47	49	60	67	65	83	80	91	100	121	121	138
			9	17	29	38	39	49	51	62	70	68	86	83	95	105	126	126	144
			12	18	30	39	40	51	53	65	72	71	89	86	99	109	131	131	150
	SMALL		6	—	24	24	28	34	36	41	42	45	48	53	61	62	68	71	78
			9	—	25	25	29	35	38	43	44	47	50	55	63	65	71	74	81
			12	—	26	26	30	37	39	44	46	49	52	58	66	67	74	77	84
	BYPASS		6	14	24	30	33	41	42	52	61	57	69	67	83	77	106	93	121
			9	15	25	32	34	42	44	54	63	60	72	69	87	80	111	97	126
			12	15	26	33	35	44	46	57	66	62	75	72	90	83	115	101	131
HOT WATER AND STEAM	INTEGRAL FACE AND BYPASS	1	6	—	146	221	192	240	224	272	224	295	239	400	507	411	587	541	587
			9	—	152	230	200	250	233	283	233	307	249	417	528	428	612	564	612
			12	—	158	239	208	260	242	294	242	319	259	434	550	446	637	587	637
		2	6	—	152	232	202	255	237	290	237	316	254	429	536	442	630	598	630
			9	—	158	242	210	266	247	302	247	329	265	447	559	461	657	623	657
			12	—	164	252	218	277	257	314	257	342	276	466	582	480	684	649	684
		3	6	—	158	245	212	271	251	309	251	338	269	469	585	483	695	658	695
			9	—	165	255	221	282	261	322	261	352	280	489	610	503	724	685	724
			12	—	172	265	230	293	271	335	271	366	291	509	635	524	754	714	754

Table 20 — Dry Coil Weights (lb) — Sizes 25T–110W

COIL TYPE	FACE AREA	ROWS	FPI	39M UNIT SIZE															
				25T	30W	30T	35T	36W	37T	40W	42T	50W	51T	58T	61W	72W	85W	96W	110W
CHILLED WATER OR DIRECT EXPANSION	LARGE	4	8	355	437	428	503	528	531	576	603	728	729	830	884	1043	1229	1386	1584
			11	370	455	446	523	550	553	600	628	758	759	865	921	1087	1280	1444	1650
			14	385	473	463	544	572	575	624	653	789	790	899	958	1130	1331	1502	1716
		6	8	497	612	599	704	739	743	806	844	1019	1021	1162	1238	1461	1720	1940	2218
			11	518	637	624	733	770	774	840	879	1062	1063	1211	1289	1521	1792	2021	2310
			14	539	663	649	762	801	805	874	915	1104	1106	1259	1341	1582	1863	2102	2402
		8	8	639	787	770	905	950	956	1037	1085	1310	1312	1494	1591	1878	2211	2495	2851
			11	666	819	802	942	990	996	1080	1131	1365	1367	1557	1658	1956	2303	2599	2970
			14	693	852	834	980	1030	1035	1123	1176	1420	1422	1619	1724	2034	2396	2703	3089
		10	8	758	932	913	1072	1126	1133	1229	1286	1553	1555	1771	1886	2226	2621	2957	3379
			11	789	971	951	1117	1173	1180	1280	1340	1618	1620	1845	1964	2318	2730	3080	3520
			14	821	1010	989	1161	1220	1227	1331	1394	1682	1685	1919	2043	2411	2839	3203	3661
	MEDIUM	4	8	270	368	325	402	432	443	528	503	572	608	689	728	856	1008	1134	1296
			11	281	383	338	419	450	461	550	523	596	633	717	758	892	1050	1181	1350
			14	292	399	352	436	468	479	572	544	620	658	746	789	927	1092	1229	1404
		6	8	377	515	454	563	605	620	739	704	801	851	964	1019	1198	1411	1588	1814
			11	393	537	473	586	630	645	770	733	834	886	1004	1062	1248	1470	1654	1890
			14	409	558	492	610	655	671	801	762	868	921	1044	1104	1298	1529	1720	1966
		8	8	485	662	584	724	778	797	950	905	1030	1094	1239	1310	1541	1814	2041	2333
			11	505	690	608	754	810	830	990	942	1073	1139	1291	1365	1605	1890	2126	2430
			14	526	718	633	784	842	863	1030	980	1115	1185	1343	1420	1669	1966	2211	2527
		10	8	575	785	692	858	922	944	1126	1072	1220	1296	1469	1553	1826	2150	2419	2765
			11	599	818	721	893	960	983	1173	1117	1271	1350	1530	1618	1902	2240	2520	2880
			14	623	850	750	929	998	1023	1220	1161	1322	1404	1591	1682	1978	2330	2621	2995
	SMALL	4	8	159	207	192	285	288	280	288	335	364	304	425	442	—	—	—	—
			11	166	216	200	297	300	292	300	349	379	316	443	460	—	—	—	—
			14	173	224	208	308	312	304	312	363	394	329	461	479	—	—	—	—
	BYPASS	4	8	233	322	280	335	360	354	432	385	468	466	547	572	669	788	882	1008
			11	242	335	292	349	375	369	450	401	488	485	570	596	697	820	919	1050
			14	252	349	304	363	390	384	468	417	507	505	592	620	724	853	956	1092
		6	8	326	451	392	469	504	496	605	539	655	652	765	801	936	1103	1235	1411
			11	339	470	409	489	525	516	630	562	683	679	797	834	975	1148	1286	1470
			14	353	488	425	508	546	537	655	584	710	706	829	868	1014	1194	1338	1529
		8	8	419	580	504	603	648	637	778	693	842	838	984	1030	1204	1418	1588	1814
			11	436	604	525	628	675	664	810	722	878	873	1025	1073	1254	1477	1654	1890
			14	454	628	546	653	702	690	842	751	913	908	1066	1115	1304	1536	1720	1966
		10	8	497	687	598	715	768	755	922	822	998	994	1166	1220	1427	1680	1882	2150
			11	517	716	623	744	800	787	960	856	1040	1035	1215	1271	1486	1750	1960	2240
			14	538	744	648	774	832	818	998	890	1082	1076	1264	1322	1546	1820	2038	2330

Table 20 — Dry Coil Weights (lb) — Sizes 25T–110W (cont)

COIL TYPE	FACE AREA	ROWS	FPI	39M UNIT SIZE															
				25T	30W	30T	35T	36W	37T	40W	42T	50W	51T	58T	61W	72W	85W	96W	110W
HOT WATER	LARGE	1	8	118	146	143	168	176	177	192	201	243	243	277	295	348	410	462	528
			11	123	152	149	174	183	184	200	209	253	253	288	307	362	427	481	550
			14	128	158	154	181	191	192	208	218	263	263	300	319	377	444	501	572
		2	8	166	204	200	235	246	248	269	281	340	340	387	413	487	573	647	739
			11	173	212	208	244	257	258	280	293	354	354	404	430	507	597	674	770
			14	180	221	216	254	267	268	291	305	368	369	420	447	527	621	701	801
	MEDIUM	1	8	90	123	108	134	144	148	176	168	191	203	230	243	285	336	378	432
			11	94	128	113	140	150	154	183	174	199	211	239	253	297	350	394	450
			14	97	133	117	145	156	160	191	181	207	219	249	263	309	364	410	468
		2	8	126	172	151	188	202	207	246	235	267	284	321	340	399	470	529	605
			11	131	179	158	195	210	215	257	244	278	295	335	354	416	490	551	630
			14	136	186	164	203	218	224	267	254	289	307	348	368	433	510	573	655
	SMALL	1	8	53	69	64	95	96	93	96	112	121	101	142	147	—	—	—	—
			11	55	72	67	99	100	97	100	116	126	105	148	153	—	—	—	—
			14	58	75	69	103	104	101	104	121	131	110	154	160	—	—	—	—
		2	8	74	97	89	133	134	131	134	156	170	142	198	206	—	—	—	—
			11	77	101	93	138	140	136	140	163	177	148	207	215	—	—	—	—
			14	81	105	97	144	146	142	146	169	184	154	215	223	—	—	—	—
	BYPASS	1	8	78	107	93	112	120	118	144	128	156	155	182	191	223	263	294	336
			11	81	112	97	116	125	123	150	134	163	162	190	199	232	273	306	350
			14	84	116	101	121	130	128	156	139	169	168	197	207	241	284	319	364
		2	8	109	150	131	156	168	165	202	180	218	217	255	267	312	368	412	470
			11	113	157	136	163	175	172	210	187	228	226	266	278	325	383	429	490
			14	118	163	142	169	182	179	218	195	237	235	276	289	338	398	446	510
1-in. IDT STEAM	LARGE	1	6	166	204	200	235	246	248	269	281	340	340	387	413	487	573	647	739
			9	173	212	208	244	257	258	280	293	354	354	404	430	507	597	674	770
			12	180	221	216	254	267	268	291	305	368	369	420	447	527	621	701	801
	MEDIUM		6	126	172	151	188	202	207	246	235	267	284	321	340	399	470	529	605
			9	131	179	158	195	210	215	257	244	278	295	335	354	416	490	551	630
			12	136	186	164	203	218	224	267	254	289	307	348	368	433	510	573	655
	SMALL		6	74	97	89	133	134	131	134	156	170	142	198	206	—	—	—	—
			9	77	101	93	138	140	136	140	163	177	148	207	215	—	—	—	—
			12	81	105	97	144	146	142	146	169	184	154	215	223	—	—	—	—
	BYPASS		6	109	150	131	156	168	165	202	180	218	217	255	267	312	368	412	470
			9	113	157	136	163	175	172	210	187	228	226	266	278	325	383	429	490
			12	118	163	142	169	182	179	218	195	237	235	276	289	338	398	446	510
HOT WATER OR STEAM	INTEGRAL FACE AND BYPASS	1	6	565	749	677	811	853	788	906	914	1064	1046	1150	1181	1356	1628	1699	1983
			9	588	780	706	845	889	821	944	952	1108	1090	1198	1230	1412	1695	1769	2066
			12	613	813	735	880	926	855	983	992	1154	1135	1248	1281	1471	1766	1843	2152
		2	6	621	810	752	909	935	885	997	1025	1180	1190	1316	1320	1530	1846	1931	2262
			9	647	844	783	947	974	922	1039	1068	1229	1239	1371	1375	1594	1923	2011	2356
			12	674	879	816	986	1015	960	1082	1112	1280	1291	1428	1432	1660	2003	2095	2454
		3	6	690	899	844	1028	1044	999	1117	1174	1327	1358	1506	1675	1736	2102	2202	2586
			9	719	936	879	1070	1088	1041	1164	1223	1382	1414	1569	1745	1809	2190	2293	2694
			12	749	975	916	1115	1133	1084	1212	1274	1440	1473	1634	1818	1884	2281	2389	2806

LEGEND
FPI — Fins Per Inch
IDT — Inner Distributing Tube

NOTES:
1. Weights shown include headers and are the sum of two coils where applicable.
2. Coils are full length.
3. Weights shown are for aluminum fin coils; for copper fin coils, multiply by 1.20.
4. Weights shown are for 1/2-in., .016 in. wall tubes; for 1/2-in., .025-in. wall tubes, multiply by 1.15.
5. Weights shown are for 1/2-in., .016-in. wall tubes; for 5/8-in., .020-in. wall tubes, multiply by 1.15.
6. Weights shown are for 1/2-in., .016-in. wall tubes; for 5/8-in., .035-in. wall tubes, multiply by 1.50.

Table 21 — NEMA Motor Weights (lb)

HP	230/460-3-60		200/400-3-50*		575-3-60	
	ODP	TEFC	ODP	TEFC	ODP	TEFC
1	40	68	29	34	37	60/68
1-1/2	46	66	36	41	48	60/66
2	54	66	41	47	50	65/66
3	87	92	73	62	70	87
5	94	99	102	72	88	89/99
7-1/2	130	158	121	105	89	142/158
10	126	200	139	128	119	154/200
15	217	259	170	210	170	250/259
20	250	290	205	254	212	287/290
25	309	358	273	363	240	394/368
30	300	436	283	414	284	436/436
40	415	661	416†	470†	370	661/661
50	414	686	403†	527†	440	686/686
60	652**	799	545	790†	591	799
75	706**	850**	651†	884†	670	850
100	782**	1475**	1133†	1450†	750	1008†
125	1000**	1600**	1210†	1625†	950	1714†
150	1318**	1773**	—	—	—	—

LEGEND

ODP — Open Drip Proof
TEFC — Totally Enclosed Fan Cooled

*Both ODP and TEFC 50 Hz motors available in standard models only.
†Availability unconfirmed.
**460 volt only.

NOTES:
1. Multiply motor weight by 0.10 to estimate drive weight.
2. Motor weight may vary by manufacturer.

Table 22 — Forward-Curved Fan Drive Centerline Distances in Inches

39M UNIT SIZE	FAN MODEL NO.	MOTOR SIZE	BHF/BHR		DBF/DBR		THF/THR		UBF/UBR		FAN SHAFT DIAM. (in.)	
			MIN	MAX	MIN	MAX	MIN	MAX	MIN	MAX	CLASS 1	CLASS 2
03W	FC A9-4A	56	8.0	8.4	5.7	6.3	5.5	6.0	7.4	7.9	1	1
		143T	8.0	8.4	5.7	6.3	5.5	6.0	7.4	7.9		
		145T	8.0	8.4	5.7	6.3	5.5	6.0	7.4	7.9		
		182T	7.0	7.4	4.7	5.4	4.5	5.1	6.4	7.0		
		184T	7.0	7.4	4.7	5.4	4.5	5.1	6.4	7.0		
06W	FC A9-4A	56	8.0	8.4	5.7	6.3	5.5	6.0	7.4	7.9	1	1
		143T	8.0	8.4	5.7	6.3	5.5	6.0	7.4	7.9		
		145T	8.0	8.4	5.7	6.3	5.5	6.0	7.4	7.9		
		182T	7.0	7.4	4.7	5.4	4.5	5.1	6.4	7.0		
		184T	7.0	7.4	4.7	5.4	4.5	5.1	6.4	7.0		
	FC A10-8A	56	10.6	11.6	6.8	8.9	8.0	10.2	8.3	10.1	1	1
		143T	10.6	11.6	6.8	8.9	8.0	10.2	8.3	10.1		
		145T	10.6	11.6	6.8	8.9	8.0	10.2	8.3	10.1		
		182T	9.8	10.8	6.0	8.3	7.3	9.6	7.4	9.4		
		184T	9.8	10.8	6.0	8.3	7.3	9.6	7.4	9.4		
07T	FC A10-8A	56	16.7	19.4	14.7	17.6	15.7	18.6	14.8	17.7	1-3/16	1-3/16
		143T	16.7	19.4	14.7	17.6	15.7	18.6	14.8	17.7		
		145T	16.7	19.4	14.7	17.6	15.7	18.6	14.8	17.7		
		182T	16.4	19.1	14.8	17.7	15.7	18.6	14.8	17.6		
		184T	16.4	19.1	14.8	17.7	15.7	18.6	14.8	17.6		
		213T	16.2	19.0	14.8	17.7	15.7	18.6	14.8	17.6		
		215T	16.2	19.0	14.8	17.7	15.7	18.6	14.8	17.6		
	FC A12-12A	56	18.9	21.6	18.9	21.6	17.5	20.4	16.3	19.1	1-3/16	1-3/16
		143T	18.9	21.6	18.9	21.6	17.5	20.4	16.3	19.1		
		145T	18.9	21.6	18.9	21.6	17.5	20.4	16.3	19.1		
		182T	18.5	21.3	18.5	21.3	17.4	20.3	16.1	19.0		
		184T	18.5	21.3	18.5	21.3	17.4	20.3	16.1	19.0		
		213T	18.3	21.0	18.3	21.0	17.4	20.3	16.0	18.9		
		215T	18.3	21.0	18.3	21.0	17.4	20.3	16.0	18.9		
08W	FC A10-8A	182T	13.3	14.7	9.8	11.5	11.0	12.7	10.4	12.1	1-3/16	1-3/16
		184T	13.3	14.7	9.8	11.5	11.0	12.7	10.4	12.1		
		213T	12.8	14.3	9.7	11.4	10.9	12.6	10.2	11.8		
	FC A12-12A	56	14.4	15.6	9.5	11.0	10.9	12.4	10.8	12.2	1-3/16	1-3/16
		143T	14.4	15.6	9.5	11.0	10.9	12.4	10.8	12.2		
		145T	14.4	15.6	9.5	11.0	10.9	12.4	10.8	12.2		
		182T	13.6	14.9	9.0	10.7	10.4	12.0	10.2	11.7		
		184T	13.6	14.9	9.0	10.7	10.4	12.0	10.2	11.7		
		213T	13.1	14.4	8.8	10.5	10.1	11.8	9.8	11.4		
09T	FC A10-8A	56	16.7	19.4	14.7	17.6	15.7	18.6	14.8	17.7	1-3/16	1-3/16
		143T	16.7	19.4	14.7	17.6	15.7	18.6	14.8	17.7		
		145T	16.7	19.4	14.7	17.6	15.7	18.6	14.8	17.7		
		182T	16.4	19.1	14.8	17.7	15.7	18.6	14.8	17.6		
		184T	16.4	19.1	14.8	17.7	15.7	18.6	14.8	17.6		
		213T	16.2	19.0	14.8	17.7	15.7	18.6	14.8	17.6		
		215T	16.2	19.0	14.8	17.7	15.7	18.6	14.8	17.6		
	FC A12-12A	56	18.9	21.6	18.9	21.6	17.5	20.4	16.3	19.1	1-3/16	1-3/16
		143T	18.9	21.6	18.9	21.6	17.5	20.4	16.3	19.1		
		145T	18.9	21.6	18.9	21.6	17.5	20.4	16.3	19.1		
		182T	18.5	21.3	18.5	21.3	17.4	20.3	16.1	19.0		
		184T	18.5	21.3	18.5	21.3	17.4	20.3	16.1	19.0		
		213T	18.3	21.0	18.3	21.0	17.4	20.3	16.0	18.9		
		215T	18.3	21.0	18.3	21.0	17.4	20.3	16.0	18.9		
10W	FC A12-12A	184T	13.6	14.9	9.0	10.7	10.4	12.0	10.2	11.7	1-3/16	1-3/16
		213T	13.1	14.4	8.8	10.5	10.1	11.8	9.8	11.4		
		215T	13.1	14.4	8.8	10.5	10.1	11.8	9.8	11.4		
	FC A15-15A	143T	15.2	16.2	8.8	10.1	10.8	12.2	10.9	12.1	1-3/16	1-3/16
		145T	15.2	16.2	8.8	10.1	10.8	12.2	10.9	12.1		
		182T	14.3	15.4	8.1	9.6	10.2	11.6	10.2	11.4		
		184T	14.3	15.4	8.1	9.6	10.2	11.6	10.2	11.4		
		213T	13.7	14.8	7.7	9.3	9.7	11.2	9.6	10.9		

Table 22 — Forward-Curved Fan Drive Centerline Distances in Inches (cont)

39M UNIT SIZE	FAN MODEL NO.	MOTOR SIZE	BHF/BHR		DBF/DBR		THF/THR		UBF/UBR		FAN SHAFT DIAM. (in.)	
			MIN	MAX	MIN	MAX	MIN	MAX	MIN	MAX	CLASS 1	CLASS 2
11T	FC A12-12A	56	18.9	21.6	18.9	21.6	17.5	20.4	16.3	19.1	1-3/16	1-3/16
		143T	18.9	21.6	18.9	21.6	17.5	20.4	16.3	19.1		
		145T	18.9	21.6	18.9	21.6	17.5	20.4	16.3	19.1		
		182T	18.5	21.3	18.5	21.3	17.4	20.3	16.1	19.0		
		184T	18.5	21.3	18.5	21.3	17.4	20.3	16.1	19.0		
		213T	18.3	21.0	18.3	21.0	17.4	20.3	16.0	18.9		
		215T	18.3	21.0	18.3	21.0	17.4	20.3	16.0	18.9		
	FC A15-15A	56	21.5	24.1	17.9	20.8	19.6	22.5	18.6	21.3	1-3/16	1-3/16
		143T	21.5	24.1	17.9	20.8	19.6	22.5	18.6	21.3		
		145T	21.5	24.1	17.9	20.8	19.6	22.5	18.6	21.3		
		182T	21.1	23.7	17.8	20.7	19.5	22.3	18.3	21.1		
		184T	21.1	23.7	17.8	20.7	19.5	22.3	18.3	21.1		
		213T	20.8	23.5	17.8	20.7	19.4	22.2	18.1	21.0		
		215T	20.8	23.5	17.8	20.7	19.4	22.2	18.1	21.0		
12T	FC A12-12A	56	18.9	21.6	18.9	21.6	17.5	20.4	16.3	19.1	1-3/16	1-3/16
		143T	18.9	21.6	18.9	21.6	17.5	20.4	16.3	19.1		
		145T	18.9	21.6	18.9	21.6	17.5	20.4	16.3	19.1		
		182T	18.5	21.3	18.5	21.3	17.4	20.3	16.1	19.0		
		184T	18.5	21.3	18.5	21.3	17.4	20.3	16.1	19.0		
		213T	18.3	21.0	18.3	21.0	17.4	20.3	16.0	18.9		
		215T	18.3	21.0	18.3	21.0	17.4	20.3	16.0	18.9		
	FC A15-15A	56	21.5	24.1	17.9	20.8	19.6	22.5	18.6	21.3	1-3/16	1-3/16
		143T	21.5	24.1	17.9	20.8	19.6	22.5	18.6	21.3		
		145T	21.5	24.1	17.9	20.8	19.6	22.5	18.6	21.3		
		182T	21.1	23.7	17.8	20.7	19.5	22.3	18.3	21.1		
		184T	21.1	23.7	17.8	20.7	19.5	22.3	18.3	21.1		
		213T	20.8	23.5	17.8	20.7	19.4	22.2	18.1	21.0		
		215T	20.8	23.5	17.8	20.7	19.4	22.2	18.1	21.0		
12W	FC A12-11A	184T	17.4	18.9	13.8	15.5	15.1	16.8	14.6	16.2	1-7/16	1-7/16
		213T	17.0	18.5	13.6	15.3	14.9	16.6	14.3	16.0		
		215T	17.0	18.5	13.6	15.3	14.9	16.6	14.3	16.0		
		254T	16.5	18.1	13.5	15.2	14.7	16.4	14.0	15.7		
	FC A15-15A	145T	18.3	19.5	12.9	14.5	14.9	16.4	14.5	15.9	1-3/16	1-3/16
		182T	17.6	18.9	12.5	14.1	14.4	16.0	13.9	15.4		
		184T	17.6	18.9	12.5	14.1	14.4	16.0	13.9	15.4		
		213T	17.1	18.4	12.2	13.9	14.1	15.7	13.5	15.0		
14W	FC A15-15A	184T	22.4	23.9	18.2	19.9	20.0	21.7	19.2	20.8	1-7/16	1-7/16
		213T	22.0	23.5	18.0	19.7	19.8	21.5	18.9	20.5		
		215T	22.0	23.5	18.0	19.7	19.8	21.5	18.9	20.5		
		254T	21.5	23.1	17.8	19.5	19.5	21.2	18.5	20.2		
	FC A18-18A	145T	23.1	24.5	17.2	18.7	19.5	21.1	19.0	20.4	1-3/16	1-7/16
		182T	22.5	23.8	16.7	18.4	19.1	20.6	18.4	19.9		
		184T	22.5	23.8	16.7	18.4	19.1	20.6	18.4	19.9		
		213T	22.0	23.4	16.5	18.1	18.7	20.4	18.0	19.5		
16T	FC A15-15A	182T	22.2	24.9	19.1	21.9	20.7	23.6	19.5	22.3	1-7/16	1-7/16
		184T	22.2	24.9	19.1	21.9	20.7	23.6	19.5	22.3		
		213T	21.9	24.6	19.0	21.9	20.6	23.5	19.4	22.2		
		215T	21.9	24.6	19.0	21.9	20.6	23.5	19.4	22.2		
		254T	21.6	24.3	19.0	21.9	20.5	23.4	19.2	22.1		
		256T	21.6	24.3	19.0	21.9	20.5	23.4	19.2	22.1		
	FC A18-18A	56	25.0	27.5	20.4	23.2	22.5	25.3	21.5	24.1	1-3/16	1-7/16
		143T	25.0	27.5	20.4	23.2	22.5	25.3	21.5	24.1		
		145T	25.0	27.5	20.4	23.2	22.5	25.3	21.5	24.1		
		182T	24.5	27.0	20.2	23.1	22.3	25.1	21.1	23.8		
		184T	24.5	27.0	20.2	23.1	22.3	25.1	21.1	23.8		
		213T	24.1	26.7	20.1	23.0	22.1	25.0	20.9	23.6		
		215T	24.1	26.7	20.1	23.0	22.1	25.0	20.9	23.6		

Table 22 — Forward-Curved Fan Drive Centerline Distances in Inches (cont)

39M UNIT SIZE	FAN MODEL NO.	MOTOR SIZE	BHF/BHR		DBF/DBR		THF/THR		UBF/UBR		FAN SHAFT DIAM. (in.)	
			MIN	MAX	MIN	MAX	MIN	MAX	MIN	MAX	CLASS 1	CLASS 2
17W	FC A15-15A	213T	22.0	23.5	18.0	19.7	19.8	21.5	18.9	20.5	1-7/16	1-7/16
		215T	22.0	23.5	18.0	19.7	19.8	21.5	18.9	20.5		
		254T	21.5	23.1	17.8	19.5	19.5	21.2	18.5	20.2		
	FC A18-18A	145T	23.1	24.5	17.2	18.7	19.1	20.6	19.0	20.4	1-3/16	1-7/16
		182T	22.5	23.8	16.7	18.4	18.3	19.9	18.4	19.9		
		184T	22.5	23.8	16.7	18.4	17.9	19.6	18.4	19.9		
		213T	22.0	23.4	16.5	18.1	17.5	19.2	18.0	19.5		
		215T	22.0	23.4	16.5	18.1	17.5	19.2	18.0	19.5		
18T	FC A15-15A	213T	22.0	24.6	19.0	21.9	20.6	23.5	19.4	22.2	1-11/16	1-11/16
		215T	22.0	24.6	19.0	21.9	20.6	23.5	19.4	22.2		
		254T	21.6	24.4	19.0	21.9	20.5	23.4	19.2	22.1		
		256T	21.6	24.4	19.0	21.9	20.5	23.4	19.2	22.1		
		284T	21.4	24.2	19.0	21.9	20.5	23.4	19.1	22.0		
		286T	21.4	24.2	19.0	21.9	20.5	23.4	19.1	22.0		
	FC A18-18A	56	25.0	27.5	20.4	23.2	22.5	25.3	21.5	24.1	1-3/16	1-7/16
		143T	25.0	27.5	20.4	23.2	22.5	25.3	21.5	24.1		
		145T	25.0	27.5	20.4	23.2	22.5	25.3	21.5	24.1		
		182T	24.5	27.0	20.2	23.1	22.3	25.1	21.1	23.8		
		184T	24.5	27.0	20.2	23.1	22.3	25.1	21.1	23.8		
		213T	24.1	26.7	20.1	23.0	22.1	25.0	20.9	23.6		
		215T	24.1	26.7	20.1	23.0	22.1	25.0	20.9	23.6		
21W	FC A15-15A	215T	19.9	21.3	15.6	17.3	17.4	19.0	16.6	18.2	1-11/16	1-11/16
		254T	19.3	20.8	15.4	17.1	17.1	18.8	16.2	17.8		
		256T	19.3	20.8	15.4	17.1	17.1	18.8	16.2	17.8		
		284T	18.9	20.5	15.2	17.0	16.9	18.6	15.9	17.6		
	FC A20-18A	145T	24.7	26.0	14.6	16.4	17.4	19.1	18.6	20.0	1-7/16	1-7/16
		182T	23.9	25.1	14.0	15.8	16.7	18.5	17.8	19.2		
		184T	23.9	25.1	14.0	15.8	16.7	18.5	17.8	19.2		
		213T	23.2	24.6	13.5	15.4	16.2	18.1	17.2	18.7		
		215T	23.2	24.6	13.5	15.4	16.2	18.1	17.2	18.7		
		254T	22.4	23.8	13.0	14.9	15.6	17.5	16.4	18.0		
22T	FC A15-15A	213T	22.0	24.6	19.0	21.9	20.6	23.5	19.4	22.2	1-11/16	1-11/16
		215T	22.0	24.6	19.0	21.9	20.6	23.5	19.4	22.2		
		254T	21.6	24.4	19.0	21.9	20.5	23.4	19.2	22.1		
		256T	21.6	24.4	19.0	21.9	20.5	23.4	19.2	22.1		
		284T	21.4	24.2	19.0	21.9	20.5	23.4	19.1	22.0		
		286T	21.4	24.2	19.0	21.9	20.5	23.4	19.1	22.0		
	FC A20-18A	56	31.7	34.1	24.1	26.9	27.7	30.5	26.0	28.5	1-7/16	1-7/16
		143T	31.7	34.1	24.1	26.9	27.7	30.5	26.0	28.5		
		145T	31.7	34.1	24.1	26.9	27.7	30.5	26.0	28.5		
		182T	31.2	33.6	23.8	26.7	27.4	30.2	25.5	28.2		
		184T	31.2	33.6	23.8	26.7	27.4	30.2	25.5	28.2		
		213T	30.8	33.2	23.7	26.6	27.2	30.0	25.2	27.9		
		215T	30.8	33.2	23.7	26.6	27.2	30.0	25.2	27.9		
		254T	30.3	32.8	23.5	26.4	27.0	29.8	24.9	27.6		
		256T	30.3	32.8	23.5	26.4	27.0	29.8	24.9	27.6		
25W	FC A20-15A	215T	31.3	33.1	23.5	25.6	26.7	28.8	25.7	27.7	1-11/16	1-11/16
		254T	30.7	32.5	23.2	25.4	26.4	28.5	25.2	27.2		
		256T	30.7	32.5	23.2	25.4	26.4	28.5	25.2	27.2		
		284T	30.2	32.1	23.0	25.2	26.1	28.3	24.9	26.9		
	FC A20-18A	145T	32.4	34.1	24.1	26.2	27.4	29.5	26.6	28.5	1-7/16	1-7/16
		182T	31.7	33.5	23.7	25.9	27.0	29.1	26.1	28.0		
		184T	31.7	33.5	23.7	25.9	27.0	29.1	26.1	28.0		
		213T	31.3	33.1	23.5	25.6	26.7	28.8	25.7	27.7		
		215T	31.3	33.1	23.5	25.6	26.7	28.8	25.7	27.7		
		254T	30.7	32.5	23.2	25.4	26.4	28.5	25.2	27.2		

Table 22 — Forward-Curved Fan Drive Centerline Distances in Inches (cont)

39M UNIT SIZE	FAN MODEL NO.	MOTOR SIZE	BHF/BHR		DBF/DBR		THF/THR		UBF/UBR		FAN SHAFT DIAM. (in.)	
			MIN	MAX	MIN	MAX	MIN	MAX	MIN	MAX	CLASS 1	CLASS 2
25T	FC A20-15A	213T	30.8	33.2	23.7	26.6	27.2	30.0	25.2	27.9	1-11/16	1-11/16
		215T	30.8	33.2	23.7	26.6	27.2	30.0	25.2	27.9		
		254T	30.3	32.8	23.5	26.4	27.0	29.8	24.9	27.6		
		256T	30.3	32.8	23.5	26.4	27.0	29.8	24.9	27.6		
		284T	29.9	32.4	23.5	26.3	26.8	29.7	24.6	27.4		
		286T	29.9	32.4	23.5	26.3	26.8	29.7	24.6	27.4		
	FC A20-18A	56	31.7	34.1	24.1	26.9	27.7	30.5	26.0	28.5	1-7/16	1-7/16
		143T	31.7	34.1	24.1	26.9	27.7	30.5	26.0	28.5		
		145T	31.7	34.1	24.1	26.9	27.7	30.5	26.0	28.5		
		182T	31.2	33.6	23.8	26.7	27.4	30.2	25.5	28.2		
		184T	31.2	33.6	23.8	26.7	27.4	30.2	25.5	28.2		
		213T	30.8	33.2	23.7	26.6	27.2	30.0	25.2	27.9		
		215T	30.8	33.2	23.7	26.6	27.2	30.0	25.2	27.9		
		254T	30.3	32.8	23.5	26.4	27.0	29.8	24.9	27.6		
		256T	30.3	32.8	23.5	26.4	27.0	29.8	24.9	27.6		
30W	FC A20-18H	215T	31.3	33.1	23.5	25.6	26.7	28.8	25.7	27.7	1-11/16	1-11/16
		254T	30.7	32.5	23.2	25.4	26.4	28.5	25.2	27.2		
		256T	30.7	32.5	23.2	25.4	26.4	28.5	25.2	27.2		
		284T	30.2	32.1	23.0	25.2	26.1	28.3	24.9	26.9		
		286T	30.2	32.1	23.0	25.2	26.1	28.3	24.9	26.9		
	FC A20-20H	182T	31.7	33.5	23.7	25.9	27.0	29.1	26.6	28.5	1-11/16	1-11/16
		184T	31.7	33.5	23.7	25.9	27.0	29.1	26.1	28.0		
		213T	31.3	33.1	23.5	25.6	26.7	28.8	26.1	28.0		
		215T	31.3	33.1	23.5	25.6	26.7	28.8	25.7	27.7		
		254T	30.7	32.5	23.2	25.4	26.4	28.5	25.7	27.7		
		256T	30.7	32.5	23.2	25.4	26.4	28.5	25.2	27.2		
30T	FC A20-18H	213T	32.1	34.4	24.5	27.2	27.7	30.4	26.6	29.1	1-11/16	1-11/16
		215T	32.1	34.4	24.5	27.2	27.7	30.4	26.6	29.1		
		254T	31.6	33.9	24.2	27.0	27.4	30.1	26.2	28.7		
		256T	31.6	33.9	24.2	27.0	27.4	30.1	26.2	28.7		
		284T	31.1	33.5	24.0	26.8	27.1	29.9	25.8	28.4		
		286T	31.1	33.5	24.0	26.8	27.1	29.9	25.8	28.4		
	FC A20-20H	182T	32.6	34.8	24.7	27.4	28.0	30.6	27.0	29.5	1-11/16	1-11/16
		184T	32.6	34.8	24.7	27.4	28.0	30.6	27.0	29.5		
		213T	32.1	34.4	24.5	27.2	27.7	30.3	26.6	29.1		
		215T	32.1	34.4	24.5	27.2	27.7	30.3	26.6	29.1		
		254T	31.6	33.9	24.2	27.0	27.4	30.1	26.2	28.7		
		256T	31.6	33.9	24.2	27.0	27.4	30.1	26.2	28.7		
35T	FC A20-20H	182T	32.6	34.8	24.7	27.4	28.0	30.6	27.0	29.5	1-11/16	1-11/16
		184T	32.6	34.8	24.7	27.4	28.0	30.6	27.0	29.5		
		213T	32.1	34.4	24.5	27.2	27.7	30.3	26.6	29.1		
		215T	32.1	34.4	24.5	27.2	27.7	30.3	26.6	29.1		
		254T	31.6	33.9	24.2	27.0	27.4	30.1	26.2	28.7		
		256T	31.6	33.9	24.2	27.0	27.4	30.1	26.2	28.7		
	FC A22-22H	254T	32.8	35.3	27.0	29.7	29.0	31.8	27.0	29.7	N/A	2-3/16
		256T	32.8	35.3	27.0	29.7	29.0	31.8	27.0	29.7		
		284T	32.4	34.9	26.8	29.4	28.8	31.7	26.8	29.4		
		286T	32.4	34.9	26.8	29.4	28.8	31.7	26.8	29.4		
36W	FC A22-22H	254T	28.8	31.3	23.6	26.5	24.9	27.7	26.0	28.7	1-7/16	2-3/16
		256T	28.8	31.3	23.6	26.5	24.9	27.7	26.0	28.7		
		284T	28.4	30.9	23.3	26.3	24.6	27.4	25.7	28.4		
		286T	28.4	30.9	23.3	26.3	24.6	27.4	25.7	28.4		
	FC A25-25H	182T	31.1	33.3	23.0	25.7	25.6	28.2	27.0	29.4	1-11/16	2-7/16
		184T	31.1	33.3	23.0	25.7	25.6	28.2	27.0	29.4		
		213T	30.4	32.6	22.5	25.3	25.0	27.7	26.4	28.8		
		215T	30.4	32.6	22.5	25.3	25.0	27.7	26.4	28.8		
		254T	29.7	31.9	22.1	24.9	24.5	27.2	25.7	28.2		
		256T	29.7	31.9	22.1	24.9	24.5	27.2	25.7	28.2		

Table 22 — Forward-Curved Fan Drive Centerline Distances in Inches (cont)

39M UNIT SIZE	FAN MODEL NO.	MOTOR SIZE	BHF/BHR		DBF/DBR		THF/THR		UBF/UBR		FAN SHAFT DIAM. (in.)	
			MIN	MAX	MIN	MAX	MIN	MAX	MIN	MAX	CLASS 1	CLASS 2
37T	FC A20-20H	182T	32.6	34.8	24.7	27.4	28.0	30.6	27.0	29.5	1-11/16	1-11/16
		184T	32.6	34.8	24.7	27.4	28.0	30.6	27.0	29.5		
		213T	32.1	34.4	24.5	27.2	27.7	30.3	26.6	29.1		
		215T	32.1	34.4	24.5	27.2	27.7	30.3	26.6	29.1		
		254T	31.6	33.9	24.2	27.0	27.4	30.1	26.2	28.7		
		256T	31.6	33.9	24.2	27.0	27.4	30.1	26.2	28.7		
	FC A22-22H	254T	32.8	35.3	27.0	29.7	29.0	31.8	27.0	29.7	N/A	2-3/16
		256T	32.8	35.3	27.0	29.7	29.0	31.8	27.0	29.7		
		284T	32.4	34.9	26.8	29.4	28.8	31.7	26.8	29.4		
		286T	32.4	34.9	26.8	29.4	28.8	31.7	26.8	29.4		
	FC A25-25H	182T	37.6	39.9	28.0	30.8	32.6	35.4	30.7	33.2	N/A	2-7/16
		184T	37.6	39.9	28.0	30.8	32.6	35.4	30.7	33.2		
		213T	37.2	39.5	27.8	30.6	32.4	35.1	30.3	32.9		
		215T	37.2	39.5	27.8	30.6	32.4	35.1	30.3	32.9		
		254T	36.6	39.0	27.6	30.4	32.1	34.8	29.9	32.5		
		256T	36.6	39.0	27.6	30.4	32.1	34.8	29.9	32.5		
		284T	36.2	38.6	27.5	30.3	31.9	34.7	29.6	32.2		
		286T	36.2	38.6	27.5	30.3	31.9	34.7	29.6	32.2		
40W	FC A25-20H	254T	29.7	31.9	22.1	24.9	24.5	27.2	25.7	28.2	1-11/16	2-7/16
		256T	29.7	31.9	22.1	24.9	24.5	27.2	25.7	28.2		
		284T	29.2	31.5	21.8	24.7	24.1	26.9	25.3	27.8		
		286T	29.2	31.5	21.8	24.7	24.1	26.9	25.3	27.8		
	FC A25-25H	184T	31.1	33.3	23.0	25.7	25.6	28.2	27.0	29.4	1-11/16	2-7/16
		213T	30.4	32.6	22.5	25.3	25.0	27.7	26.4	28.8		
		215T	30.4	32.6	22.5	25.3	25.0	27.7	26.4	28.8		
		254T	29.7	31.9	22.1	24.9	24.5	27.2	25.7	28.2		
		256T	29.7	31.9	22.1	24.9	24.5	27.2	25.7	28.2		
		284T	29.2	31.5	21.8	24.7	24.1	26.9	25.3	27.8		
42T	FC A25-20H	182T	37.6	39.9	28.0	30.8	32.6	35.4	30.7	33.2	N/A	2-7/16
		184T	37.6	39.9	28.0	30.8	32.6	35.4	30.7	33.2		
		213T	37.2	39.5	27.8	30.6	32.4	35.1	30.3	32.9		
		215T	37.2	39.5	27.8	30.6	32.4	35.1	30.3	32.9		
		254T	36.6	39.0	27.6	30.4	32.1	34.8	29.9	32.5		
		256T	36.6	39.0	27.6	30.4	32.1	34.8	29.9	32.5		
		284T	36.2	38.6	27.5	30.3	31.9	34.7	29.6	32.2		
		286T	36.2	38.6	27.5	30.3	31.9	34.7	29.6	32.2		
	FC A25-25H	182T	37.6	39.9	28.0	30.8	32.6	35.4	30.7	33.2	N/A	2-7/16
		184T	37.6	39.9	28.0	30.8	32.6	35.4	30.7	33.2		
		213T	37.2	39.5	27.8	30.6	32.4	35.1	30.3	32.9		
		215T	37.2	39.5	27.8	30.6	32.4	35.1	30.3	32.9		
		254T	36.6	39.0	27.6	30.4	32.1	34.8	29.9	32.5		
		256T	36.6	39.0	27.6	30.4	32.1	34.8	29.9	32.5		
		284T	36.2	38.6	27.5	30.3	31.9	34.7	29.6	32.2		
		286T	36.2	38.6	27.5	30.3	31.9	34.7	29.6	32.2		

Table 22 — Forward-Curved Fan Drive Centerline Distances in Inches (cont)

39M UNIT SIZE	FAN MODEL NO.	MOTOR SIZE	BHF/BHR		DBF/DBR		THF/THR		UBF/UBR		FAN SHAFT DIAM. (in.)	
			MIN	MAX	MIN	MAX	MIN	MAX	MIN	MAX	Class 1	Class 2
50W	FC A27-22H	254T	31.9	34.1	23.2	25.9	26.0	28.5	27.5	29.8	1-11/16	2-7/16
		256T	31.9	34.1	23.2	25.9	26.0	28.5	27.5	29.8		
		284T	31.4	33.6	22.8	25.6	25.5	28.2	27.0	29.4		
		286T	31.4	33.6	22.8	25.6	25.5	28.2	27.0	29.4		
		324T	30.7	32.9	22.4	25.2	25.0	27.7	26.3	28.8		
	FC A27-27H	184T	33.5	35.5	24.2	26.8	27.1	29.6	28.9	31.1	1-11/16	2-7/16
		213T	32.7	34.8	23.7	26.3	26.5	29.1	28.2	30.5		
		215T	32.7	34.8	23.7	26.3	26.5	29.1	28.2	30.5		
		254T	31.9	34.1	23.2	25.9	26.0	28.5	27.5	29.8		
		256T	31.9	34.1	23.2	25.9	26.0	28.5	27.5	29.8		
		284T	31.4	33.6	22.8	25.6	25.5	28.2	27.0	29.4		
		286T	31.4	33.6	22.8	25.6	25.5	28.2	27.0	29.4		
51T	FC A27-22H	182T	42.0	44.3	31.7	34.5	36.7	39.4	34.7	37.2	N/A	2-7/16
		184T	42.0	44.3	31.7	34.5	36.7	39.4	34.7	37.2		
		213T	41.6	43.9	31.5	34.3	36.5	39.2	34.4	36.9		
		215T	41.6	43.9	31.5	34.3	36.5	39.2	34.4	36.9		
		254T	41.0	43.4	31.2	34.0	36.1	38.9	33.9	36.4		
		256T	41.0	43.4	31.2	34.0	36.1	38.9	33.9	36.4		
		284T	40.6	43.0	31.0	33.8	35.9	38.6	33.6	36.1		
		286T	40.6	43.0	31.0	33.8	35.9	38.6	33.6	36.1		
		324T	40.1	42.5	30.8	33.7	35.6	38.4	33.1	35.7		
		326T	40.1	42.5	30.8	33.7	35.6	38.4	33.1	35.7		
	FC A27-27H	182T	42.0	44.3	31.7	34.5	36.7	39.4	34.7	37.2	N/A	2-7/16
		184T	42.0	44.3	31.7	34.5	36.7	39.4	34.7	37.2		
		213T	41.6	43.9	31.5	34.3	36.5	39.2	34.4	36.9		
		215T	41.6	43.9	31.5	34.3	36.5	39.2	34.4	36.9		
		254T	41.0	43.4	31.2	34.0	36.1	38.9	33.9	36.4		
		256T	41.0	43.4	31.2	34.0	36.1	38.9	33.9	36.4		
		284T	40.6	43.0	31.0	33.8	35.9	38.6	33.6	36.1		
		286T	40.6	43.0	31.0	33.8	35.9	38.6	33.6	36.1		
		324T	40.1	42.5	30.8	33.7	35.6	38.4	33.1	35.7		
		326T	40.1	42.5	30.8	33.7	35.6	38.4	33.1	35.7		
58T	FC A27-27H	182T	42.0	44.3	31.7	34.5	36.7	39.4	34.7	37.2	N/A	2-7/16
		184T	42.0	44.3	31.7	34.5	36.7	39.4	34.7	37.2		
		213T	41.6	43.9	31.5	34.3	36.5	39.2	34.4	36.9		
		215T	41.6	43.9	31.5	34.3	36.5	39.2	34.4	36.9		
		254T	41.0	43.4	31.2	34.0	36.1	38.9	33.9	36.4		
		256T	41.0	43.4	31.2	34.0	36.1	38.9	33.9	36.4		
		284T	40.6	43.0	31.0	33.8	35.9	38.6	33.6	36.1		
		286T	40.6	43.0	31.0	33.8	35.9	38.6	33.6	36.1		
		324T	40.1	42.5	30.8	33.7	35.6	38.4	33.1	35.7		
		326T	40.1	42.5	30.8	33.7	35.6	38.4	33.1	35.7		
	FC A30-30H	182T	45.0	47.2	33.7	36.4	39.2	41.9	37.2	39.7	N/A	2-11/16
		184T	45.0	47.2	33.7	36.4	39.2	41.9	37.2	39.7		
		213T	44.5	46.8	33.5	36.2	38.9	41.6	36.8	39.3		
		215T	44.5	46.8	33.5	36.2	38.9	41.6	36.8	39.3		
		254T	44.0	46.3	33.2	36.0	38.6	41.3	36.4	38.9		
		256T	44.0	46.3	33.2	36.0	38.6	41.3	36.4	38.9		
		284T	43.5	45.9	33.0	35.8	38.3	41.1	36.0	38.5		
		286T	43.5	45.9	33.0	35.8	38.3	41.1	36.0	38.5		
		324T	43.0	45.4	32.8	35.6	38.0	40.8	35.5	38.1		
		326T	43.0	45.4	32.8	35.6	38.0	40.8	35.5	38.1		

Table 22 — Forward-Curved Fan Drive Centerline Distances in Inches (cont)

39M UNIT SIZE	FAN MODEL NO.	MOTOR SIZE	BHF/BHR		DBF/DBR		THF/THR		UBF/UBR		FAN SHAFT DIAM. (in.)	
			MIN	MAX	MIN	MAX	MIN	MAX	MIN	MAX	Class 1	Class 2
61W	FC A27-27H	256T	34.0	36.3	25.8	28.6	28.5	31.2	29.8	32.2	1-11/16	2-7/16
		284T	33.5	35.8	25.5	28.4	28.1	30.8	29.3	31.8		
		286T	33.5	35.8	25.5	28.4	28.1	30.8	29.3	31.8		
		324T	32.8	35.2	25.1	28.0	27.6	30.4	28.7	31.3		
		326T	32.8	35.2	25.1	28.0	27.6	30.4	28.7	31.3		
	FC A30-30H	184T	36.3	38.4	25.8	28.5	29.7	32.1	31.1	33.3	1-11/16	2-11/16
		213T	35.6	37.6	25.3	28.0	29.1	31.6	30.4	32.7		
		215T	35.6	37.6	25.3	28.0	29.1	31.6	30.4	32.7		
		254T	34.8	36.9	24.8	27.5	28.5	31.0	29.7	32.0		
		256T	34.8	36.9	24.8	27.5	28.5	31.0	29.7	32.0		
		284T	34.3	36.4	24.4	27.2	28.0	30.6	29.2	31.6		
		286T	34.3	36.4	24.4	27.2	28.0	30.6	29.2	31.6		
		324T	33.5	35.7	24.0	26.8	27.5	30.1	28.6	30.9		
72W	FC 32	182T	35.7	38.2	18.2	23	27.2	30.9	27.7	30.1	2-3/16	2-3/16
		184T	35.7	38.2	18.2	23	27.2	30.9	27.7	30.1		
		213T	35.1	37.6	17.9	22.8	26.7	30.4	27.1	29.5		
		215T	35.1	37.6	17.9	22.8	26.7	30.4	27.1	29.5		
		254T	34.3	36.9	17.4	22.5	26.0	29.9	26.2	28.8		
		256T	34.3	36.9	17.4	22.5	26.0	29.9	26.2	28.8		
		284T	33.6	36.4	17.1	22.2	25.5	29.5	25.6	28.2		
		286T	33.6	36.4	17.1	22.2	25.5	29.5	25.6	28.2		
		324T	32.8	35.6	16.8	22.0	24.8	29.0	24.7	27.5		
		326T	32.8	35.6	16.8	22.0	24.8	29.0	24.7	27.5		
		364T	32.0	34.9	16.5	21.8	24.2	28.5	23.9	26.8		
		365T	32.0	34.9	16.5	21.8	24.2	28.5	23.9	26.8		
	FC 36	182T	41.2	43.6	22.7	27.5	31.7	35.4	32.9	35.5	2-7/16	2-7/16
		184T	41.2	43.6	22.7	27.5	31.7	35.4	32.9	35.5		
		213T	40.6	43.0	22.4	27.2	31.2	35.0	32.3	35.0		
		215T	40.6	43.0	22.4	27.2	31.2	35.0	32.3	35.0		
		254T	39.7	42.3	21.9	26.9	30.5	34.4	31.5	34.2		
		256T	39.7	42.3	21.9	26.9	30.5	34.4	31.5	34.2		
		284T	39.1	41.7	21.6	26.7	30.0	34.0	30.8	33.7		
		286T	39.1	41.7	21.6	26.7	30.0	34.0	30.8	33.7		
		324T	38.3	41.0	21.3	26.4	29.4	33.5	30.0	33.0		
		326T	38.3	41.0	21.3	26.4	29.4	33.5	30.0	33.0		
		364T	37.5	40.3	20.9	26.2	28.7	33.0	29.2	32.3		
		365T	37.5	40.3	20.9	26.2	28.7	33.0	29.2	32.3		
85W	FC 36	182T	41.2	43.6	22.7	27.5	31.7	35.4	32.9	35.5	2-7/16	2-7/16
		184T	41.2	43.6	22.7	27.5	31.7	35.4	32.9	35.5		
		213T	40.6	43.0	22.4	27.2	31.2	35.0	32.3	35.0		
		215T	40.6	43.0	22.4	27.2	31.2	35.0	32.3	35.0		
		254T	39.7	42.3	21.9	26.9	30.5	34.4	31.5	34.2		
		256T	39.7	42.3	21.9	26.9	30.5	34.4	31.5	34.2		
		284T	39.1	41.7	21.6	26.7	30.0	34.0	30.8	33.7		
		286T	39.1	41.7	21.6	26.7	30.0	34.0	30.8	33.7		
		324T	38.3	41.0	21.3	26.4	29.4	33.5	30.0	33.0		
		326T	38.3	41.0	21.3	26.4	29.4	33.5	30.0	33.0		
		364T	37.5	40.3	20.9	26.2	28.7	33.0	29.2	32.3		
		365T	37.5	40.3	20.9	26.2	28.7	33.0	29.2	32.3		
	FC 40	182T	46.1	48.6	27.0	31.9	35.7	39.5	37.6	40.4	2-7/16	2-7/16
		184T	46.1	48.6	27.0	31.9	35.7	39.5	37.6	40.4		
		213T	45.5	48.1	26.6	31.6	35.2	39.0	37.0	39.8		
		215T	45.5	48.1	26.6	31.6	35.2	39.0	37.0	39.8		
		254T	44.6	47.3	26.2	31.3	34.5	38.4	36.2	39.1		
		256T	44.6	47.3	26.2	31.3	34.5	38.4	36.2	39.1		
		284T	44.0	46.8	26.0	31.1	34.0	38.0	35.6	38.6		
		286T	44.0	46.8	26.0	31.1	34.0	38.0	35.6	38.6		
		324T	43.2	46.0	25.6	30.8	33.4	37.5	34.8	37.9		
		326T	43.2	46.0	25.6	30.8	33.4	37.5	34.8	37.9		
		364T	42.4	45.3	25.3	30.5	32.8	36.9	34.0	37.2		
		365T	42.4	45.3	25.3	30.5	32.8	36.9	34.0	37.2		

Table 22 — Forward-Curved Fan Drive Centerline Distances in Inches (cont)

39M UNIT SIZE	FAN MODEL NO.	MOTOR SIZE	BHF/BHR		DBF/DBR		THF/THR		UBF/UBR		FAN SHAFT DIAM. (in.)	
			MIN	MAX	MIN	MAX	MIN	MAX	MIN	MAX	Class 1	Class 2
96W	FC 40	182T	46.1	48.6	27.0	31.9	35.7	39.5	37.6	40.4	2-7/16	2-7/16
		184T	46.1	48.6	27.0	31.9	35.7	39.5	37.6	40.4		
		213T	45.5	48.1	26.6	31.6	35.2	39.0	37.0	39.8		
		215T	45.5	48.1	26.6	31.6	35.2	39.0	37.0	39.8		
		254T	44.6	47.3	26.2	31.3	34.5	38.4	36.2	39.1		
		256T	44.6	47.3	26.2	31.3	34.5	38.4	36.2	39.1		
		284T	44.0	46.8	26.0	31.1	34.0	38.0	35.6	38.6		
		286T	44.0	46.8	26.0	31.1	34.0	38.0	35.6	38.6		
		324T	43.2	46.0	25.6	30.8	33.4	37.5	34.8	37.9		
		326T	43.2	46.0	25.6	30.8	33.4	37.5	34.8	37.9		
		364T	42.4	45.3	25.3	30.5	32.8	36.9	34.0	37.2		
		365T	42.4	45.3	25.3	30.5	32.8	36.9	34.0	37.2		
110W	FC 40	182T	46.1	48.6	27.0	31.9	35.7	39.5	37.6	40.4	2-7/16	2-7/16
		184T	46.1	48.6	27.0	31.9	35.7	39.5	37.6	40.4		
		213T	45.5	48.1	26.6	31.6	35.2	39.0	37.0	39.8		
		215T	45.5	48.1	26.6	31.6	35.2	39.0	37.0	39.8		
		254T	44.6	47.3	26.2	31.3	34.5	38.4	36.2	39.1		
		256T	44.6	47.3	26.2	31.3	34.5	38.4	36.2	39.1		
		284T	44.0	46.8	26.0	31.1	34.0	38.0	35.6	38.6		
		286T	44.0	46.8	26.0	31.1	34.0	38.0	35.6	38.6		
		324T	43.2	46.0	25.6	30.8	33.4	37.5	34.8	37.9		
		326T	43.2	46.0	25.6	30.8	33.4	37.5	34.8	37.9		
		364T	42.4	45.3	25.3	30.5	32.8	36.9	34.0	37.2		
		365T	42.4	45.3	25.3	30.5	32.8	36.9	34.0	37.2		

LEGEND

BHF — Bottom Horizontal Front
BHR — Bottom Horizontal Rear
DBF — Downblast Front
DBR — Downblast Rear
THF — Top Horizontal Front
THR — Top Horizontal Rear
UBF — Upblast Front
UBR — Upblast Rear

Table 23 — Airfoil Fan Drive Centerline Distances in Inches

39M UNIT SIZE	FAN MODEL NO.	MOTOR SIZE	BHF/BHR		DBF/DBR		THF/THR		UBF/UBR		FAN SHAFT DIAM. (in.)	
			MIN	MAX	MIN	MAX	MIN	MAX	MIN	MAX	CLASS 1	CLASS 2
03W	AF 101	56	16.3	17.6	14.0	15.5	15.0	16.5	14.8	16.2	N/A	1
		143T	16.3	17.6	14.0	15.5	15.0	16.5	14.8	16.2		
		145T	16.3	17.6	14.0	15.5	15.0	16.5	14.8	16.2		
		182T	15.8	17.2	13.6	15.1	14.6	16.2	14.3	15.8		
		184T	15.8	17.2	13.6	15.1	14.6	16.2	14.3	15.8		
06W	AF 101	56	16.3	17.6	14.0	15.5	15.0	16.5	14.8	16.2	N/A	1
		143T	16.3	17.6	14.0	15.5	15.0	16.5	14.8	16.2		
		145T	16.3	17.6	14.0	15.5	15.0	16.5	14.8	16.2		
		182T	15.8	17.2	13.6	15.1	14.6	16.2	14.3	15.8		
		184T	15.8	17.2	13.6	15.1	14.6	16.2	14.3	15.8		
	AF 121	56	19.5	20.3	15.0	15.5	17.3	18.2	19.1	19.9	N/A	1-3/16
		143T	19.5	20.3	15.0	15.5	17.3	18.2	19.1	19.9		
		145T	19.5	20.3	15.0	15.5	17.3	18.2	19.1	19.9		
		182T	19.0	19.8	14.5	15.0	17.0	18.0	18.6	19.4		
		184T	19.0	19.8	14.5	15.0	17.0	18.0	18.6	19.4		
07T	AF 121	56	22.4	24.3	16.9	19.0	20.5	22.4	19.2	21.1	N/A	1-3/16
		143T	22.4	24.3	16.9	19.0	20.5	22.4	19.2	21.1		
		145T	22.4	24.3	16.9	19.0	20.5	22.4	19.2	21.1		
		182T	22.0	23.8	16.5	18.7	20.2	22.2	18.6	20.6		
		184T	22.0	23.8	16.5	18.7	20.2	22.2	18.6	20.6		
		213T	21.6	23.4	16.2	18.4	20.0	22.0	18.3	20.3		
		215T	21.6	23.4	16.2	18.4	20.0	22.0	18.3	20.3		
	AF 131	56	21.7	23.7	19.9	21.9	19.7	21.7	21.2	23.2	N/A	1-7/16
		143T	21.7	23.7	19.9	21.9	19.7	21.7	21.2	23.2		
		145T	21.7	23.7	19.9	21.9	19.7	21.7	21.2	23.2		
		182T	21.2	23.2	19.5	21.5	19.3	21.3	20.7	22.7		
		184T	21.2	23.2	19.5	21.5	19.3	21.3	20.7	22.7		
		213T	20.8	22.8	19.2	21.2	19.1	21.1	20.4	22.4		
		215T	20.8	22.8	19.2	21.2	19.1	21.1	20.4	22.4		
		254T	20.4	22.4	18.9	20.9	18.8	20.8	20.0	22.0		
		256T	20.4	22.4	18.9	20.9	18.8	20.8	20.0	22.0		
08W REAR MOUNT MOTOR	AF 121	56	19.5	20.3	15.0	15.5	17.3	18.2	19.1	19.9	N/A	1-3/16
		143T	19.5	20.3	15.0	15.5	17.3	18.2	19.1	19.9		
		145T	19.5	20.3	15.0	15.5	17.3	18.2	19.1	19.9		
		182T	19.0	19.8	14.5	15.0	17.0	18.0	18.6	19.4		
		184T	19.0	19.8	14.5	15.0	17.0	18.0	18.6	19.4		
08W SIDE MOUNT MOTOR	AF 131	143T	11.1	12.4	8.5	9.8	8.2	9.5	10.3	11.6	N/A	1-7/16
		145T	11.1	12.4	8.5	9.8	8.2	9.5	10.3	11.6		
		182T	10.0	11.5	7.6	9.1	7.2	8.7	9.3	10.8		
		184T	10.0	11.5	7.6	9.1	7.2	8.7	9.3	10.8		
		213T	9.4	11.0	7.0	8.6	6.7	8.3	8.6	10.2		
		215T	9.4	11.0	7.0	8.6	6.7	8.3	8.6	10.2		
09T	AF 121	56	22.4	24.3	16.9	19.0	20.5	22.4	19.2	21.1	N/A	1-3/16
		143T	22.4	24.3	16.9	19.0	20.5	22.4	19.2	21.1		
		145T	22.4	24.3	16.9	19.0	20.5	22.4	19.2	21.1		
		182T	22.0	23.8	16.5	18.7	20.2	22.2	18.6	20.6		
		184T	22.0	23.8	16.5	18.7	20.2	22.2	18.6	20.6		
		213T	21.6	23.4	16.2	18.4	20.0	22.0	18.3	20.3		
		215T	21.6	23.4	16.2	18.4	20.0	22.0	18.3	20.3		
	AF 131	56	21.7	23.7	19.9	21.9	19.7	21.7	21.2	23.2	N/A	1-7/16
		143T	21.7	23.7	19.9	21.9	19.7	21.7	21.2	23.2		
		145T	21.7	23.7	19.9	21.9	19.7	21.7	21.2	23.2		
		182T	21.2	23.2	19.5	21.5	19.3	21.3	20.7	22.7		
		184T	21.2	23.2	19.5	21.5	19.3	21.3	20.7	22.7		
		213T	20.8	22.8	19.2	21.2	19.1	21.1	20.4	22.4		
		215T	20.8	22.8	19.2	21.2	19.1	21.1	20.4	22.4		
		254T	20.4	22.4	18.9	20.9	18.8	20.8	20.0	22.0		
		256T	20.4	22.4	18.9	20.9	18.8	20.8	20.0	22.0		

Table 23 — Airfoil Fan Drive Centerline Distances in Inches (cont)

39M UNIT SIZE	FAN MODEL NO.	MOTOR SIZE	BHF/BHR		DBF/DBR		THF/THR		UBF/UBR		FAN SHAFT DIAM. (in.)	
			MIN	MAX	MIN	MAX	MIN	MAX	MIN	MAX	CLASS 1	CLASS 2
10W REAR MOUNT MOTOR	AF 121	56	19.5	20.3	15.0	15.5	17.3	18.2	19.1	19.9	N/A	1-3/16
		143T	19.5	20.3	15.0	15.5	17.3	18.2	19.1	19.9		
		145T	19.5	20.3	15.0	15.5	17.3	18.2	19.1	19.9		
		182T	19.0	19.8	14.5	15.0	17.0	18.0	18.6	19.4		
		184T	19.0	19.8	14.5	15.0	17.0	18.0	18.6	19.4		
10W SIDE MOUNT MOTOR	AF 131	145T	13.8	14.3	10.3	10.9	9.8	10.6	12.9	13.5	N/A	1-7/16
		182T	12.9	13.5	9.5	10.2	9.0	9.9	12.0	12.6		
		184T	12.9	13.5	9.5	10.2	9.0	9.9	12.0	12.6		
		213T	12.2	12.9	8.9	9.7	8.4	9.4	11.3	12.0		
		215T	12.2	12.9	8.9	9.7	8.4	9.4	11.3	12.0		
		254T	11.3	12.0	8.1	9.0	7.7	8.7	10.4	11.1		
11T	AF 131	56	21.7	23.7	19.9	21.9	19.7	21.7	21.2	23.2	N/A	1-7/16
		143T	21.7	23.7	19.9	21.9	19.7	21.7	21.2	23.2		
		145T	21.7	23.7	19.9	21.9	19.7	21.7	21.2	23.2		
		182T	21.2	23.2	19.5	21.5	19.3	21.3	20.7	22.7		
		184T	21.2	23.2	19.5	21.5	19.3	21.3	20.7	22.7		
		213T	20.8	22.8	19.2	21.2	19.1	21.1	20.4	22.4		
		215T	20.8	22.8	19.2	21.2	19.1	21.1	20.4	22.4		
		254T	20.4	22.4	18.9	20.9	18.8	20.8	20.0	22.0		
		256T	20.4	22.4	18.9	20.9	18.8	20.8	20.0	22.0		
	AF 161	56	28.5	30.5	23.5	25.5	26.5	28.5	25.4	27.4	N/A	1-11/16
		143T	28.5	30.5	23.5	25.5	26.5	28.5	25.4	27.4		
		145T	28.5	30.5	23.5	25.5	26.5	28.5	25.4	27.4		
		182T	28.0	30.0	23.1	25.1	26.1	28.1	24.9	26.9		
		184T	28.0	30.0	23.1	25.1	26.1	28.1	24.9	26.9		
		213T	27.7	29.7	22.8	24.8	25.9	27.9	24.5	26.5		
		215T	27.7	29.7	22.8	24.8	25.9	27.9	24.5	26.5		
		254T	27.2	29.2	22.4	24.4	25.6	27.6	24.0	26.0		
		256T	27.2	29.2	22.4	24.4	25.6	27.6	24.0	26.0		
12T	AF 131	56	21.7	23.7	19.9	21.9	19.7	21.7	21.2	23.2	N/A	1-7/16
		143T	21.7	23.7	19.9	21.9	19.7	21.7	21.2	23.2		
		145T	21.7	23.7	19.9	21.9	19.7	21.7	21.2	23.2		
		182T	21.2	23.2	19.5	21.5	19.3	21.3	20.7	22.7		
		184T	21.2	23.2	19.5	21.5	19.3	21.3	20.7	22.7		
		213T	20.8	22.8	19.2	21.2	19.1	21.1	20.4	22.4		
		215T	20.8	22.8	19.2	21.2	19.1	21.1	20.4	22.4		
		254T	20.4	22.4	18.9	20.9	18.8	20.8	20.0	22.0		
		256T	20.4	22.4	18.9	20.9	18.8	20.8	20.0	22.0		
	AF 161	56	28.5	30.5	23.5	25.5	26.5	28.5	25.4	27.4	N/A	1-11/16
		143T	28.5	30.5	23.5	25.5	26.5	28.5	25.4	27.4		
		145T	28.5	30.5	23.5	25.5	26.5	28.5	25.4	27.4		
		182T	28.0	30.0	23.1	25.1	26.1	28.1	24.9	26.9		
		184T	28.0	30.0	23.1	25.1	26.1	28.1	24.9	26.9		
		213T	27.7	29.7	22.8	24.8	25.9	27.9	24.5	26.5		
		215T	27.7	29.7	22.8	24.8	25.9	27.9	24.5	26.5		
		254T	27.2	29.2	22.4	24.4	25.6	27.6	24.0	26.0		
		256T	27.2	29.2	22.4	24.4	25.6	27.6	24.0	26.0		
12W	AF 131	145T	13.8	14.3	10.3	10.9	9.8	10.6	12.9	13.5	N/A	1-7/16
		182T	12.9	13.5	9.5	10.2	9.0	9.9	12.0	12.6		
		184T	12.9	13.5	9.5	10.2	9.0	9.9	12.0	12.6		
		213T	12.2	12.9	8.9	9.7	8.4	9.4	11.3	12.0		
		215T	12.2	12.9	8.9	9.7	8.4	9.4	11.3	12.0		
		254T	11.3	12.0	8.1	9.0	7.7	8.7	10.4	11.1		
	AF 161	145T	17.2	17.8	14.1	14.9	13.4	14.4	17.2	17.8	N/A	1-11/16
		182T	16.4	17.0	13.3	14.1	12.7	13.7	16.4	17.0		
		184T	16.4	17.0	13.3	14.1	12.7	13.7	16.4	17.0		
		213T	15.7	16.4	12.7	13.7	12.1	13.1	15.7	16.4		
		215T	15.7	16.4	12.7	13.7	12.1	13.1	15.7	16.4		
		254T	14.9	15.7	12.0	13.0	11.4	12.5	14.9	15.7		

Table 23 — Airfoil Fan Drive Centerline Distances in Inches (cont)

39M UNIT SIZE	FAN MODEL NO.	MOTOR SIZE	BHF/BHR		DBF/DBR		THF/THR		UBF/UBR		FAN SHAFT DIAM. (in.)	
			MIN	MAX	MIN	MAX	MIN	MAX	MIN	MAX	CLASS 1	CLASS 2
14W	AF 131	145T	13.8	14.3	10.3	10.9	9.8	10.6	12.9	13.5	N/A	1-7/16
		182T	12.9	13.5	9.5	10.2	9.0	9.9	12.0	12.6		
		184T	12.9	13.5	9.5	10.2	9.0	9.9	12.0	12.6		
		213T	12.2	12.9	8.9	9.7	8.4	9.4	11.3	12.0		
		215T	12.2	12.9	8.9	9.7	8.4	9.4	11.3	12.0		
		254T	11.3	12.0	8.1	9.0	7.7	8.7	10.4	11.1		
	AF 161	145T	21.2	22.2	18.7	20.0	18.2	19.5	21.2	22.2	N/A	1-11/16
		182T	20.5	21.5	18.1	19.5	17.7	19.0	20.5	21.5		
		184T	20.5	21.5	18.1	19.5	17.7	19.0	20.5	21.5		
		213T	20.0	21.0	17.7	19.1	17.3	18.7	20.0	21.0		
		215T	20.0	21.0	17.7	19.1	17.3	18.7	20.0	21.0		
		254T	19.3	20.5	17.2	18.7	16.8	18.2	19.3	20.5		
		256T	19.3	20.5	17.2	18.7	16.8	18.2	19.3	20.5		
16T	AF 131	56	21.7	23.7	19.9	21.9	19.7	21.7	21.2	23.2	N/A	1-7/16
		143T	21.7	23.7	19.9	21.9	19.7	21.7	21.2	23.2		
		145T	21.7	23.7	19.9	21.9	19.7	21.7	21.2	23.2		
		182T	21.2	23.2	19.5	21.5	19.3	21.3	20.7	22.7		
		184T	21.2	23.2	19.5	21.5	19.3	21.3	20.7	22.7		
		213T	20.8	22.8	19.2	21.2	19.1	21.1	20.4	22.4		
		215T	20.8	22.8	19.2	21.2	19.1	21.1	20.4	22.4		
		254T	20.4	22.4	18.9	20.9	18.8	20.8	20.0	22.0		
		256T	20.4	22.4	18.9	20.9	18.8	20.8	20.0	22.0		
	AF 161	56	28.5	30.5	23.5	25.5	26.5	28.5	25.4	27.4	N/A	1-11/16
		143T	28.5	30.5	23.5	25.5	26.5	28.5	25.4	27.4		
		145T	28.5	30.5	23.5	25.5	26.5	28.5	25.4	27.4		
		182T	28.0	30.0	23.1	25.1	26.1	28.1	24.9	26.9		
		184T	28.0	30.0	23.1	25.1	26.1	28.1	24.9	26.9		
		213T	27.7	29.7	22.8	24.8	25.9	27.9	24.5	26.5		
		215T	27.7	29.7	22.8	24.8	25.9	27.9	24.5	26.5		
		254T	27.2	29.2	22.4	24.4	25.6	27.6	24.0	26.0		
		256T	27.2	29.2	22.4	24.4	25.6	27.6	24.0	26.0		
17W	AF 161	145T	21.2	22.2	18.7	20.0	18.2	19.5	21.2	22.2	N/A	1-11/16
		182T	20.5	21.5	18.1	19.5	17.7	19.0	20.5	21.5		
		184T	20.5	21.5	18.1	19.5	17.7	19.0	20.5	21.5		
		213T	20.0	21.0	17.7	19.1	17.3	18.7	20.0	21.0		
		215T	20.0	21.0	17.7	19.1	17.3	18.7	20.0	21.0		
		254T	19.3	20.5	17.2	18.7	16.8	18.2	19.3	20.5		
		256T	19.3	20.5	17.2	18.7	16.8	18.2	19.3	20.5		
	AF 181	145T	21.2	22.1	18.3	19.3	17.5	19.0	21.2	22.0	1-11/16	1-15/16
		182T	20.4	21.3	17.6	18.6	16.8	18.5	20.4	21.3		
		184T	20.4	21.3	17.6	18.6	16.8	18.5	20.4	21.3		
		213T	19.9	20.7	17.1	18.2	16.3	18.0	19.9	20.7		
		215T	19.9	20.7	17.1	18.2	16.3	18.0	19.9	20.7		
		254T	19.1	20.1	16.4	17.6	15.7	17.5	19.1	20.1		
		256T	19.1	20.1	16.4	17.6	15.7	17.5	19.1	20.1		
18T	AF 161	56	28.5	30.5	23.5	25.5	26.5	28.5	25.4	27.4	N/A	1-11/16
		143T	28.5	30.5	23.5	25.5	26.5	28.5	25.4	27.4		
		145T	28.5	30.5	23.5	25.5	26.5	28.5	25.4	27.4		
		182T	28.0	30.0	23.1	25.1	26.1	28.1	24.9	26.9		
		184T	28.0	30.0	23.1	25.1	26.1	28.1	24.9	26.9		
		213T	27.7	29.7	22.8	24.8	25.9	27.9	24.5	26.5		
		215T	27.7	29.7	22.8	24.8	25.9	27.9	24.5	26.5		
		254T	27.2	29.2	22.4	24.4	25.6	27.6	24.0	26.0		
		256T	27.2	29.2	22.4	24.4	25.6	27.6	24.0	26.0		
	AF 181	56	31.0	33.0	25.0	27.0	28.7	30.7	27.1	29.1	1-11/16	1-15/16
		143T	31.0	33.0	25.0	27.0	28.7	30.7	27.1	29.1		
		145T	31.0	33.0	25.0	27.0	28.7	30.7	27.1	29.1		
		182T	30.5	32.5	24.5	26.5	28.3	30.3	26.6	28.6		
		184T	30.5	32.5	24.5	26.5	28.3	30.3	26.6	28.6		
		213T	30.1	32.1	24.2	26.2	28.0	30.0	26.1	28.1		
		215T	30.1	32.1	24.2	26.2	28.0	30.0	26.1	28.1		
		254T	29.7	31.7	23.8	25.8	27.7	29.7	25.6	27.6		
		256T	29.7	31.7	23.8	25.8	27.7	29.7	25.6	27.6		

Table 23 — Airfoil Fan Drive Centerline Distances in Inches (cont)

39M UNIT SIZE	FAN MODEL NO.	MOTOR SIZE	BHF/BHR		DBF/DBR		THF/THR		UBF/UBR		FAN SHAFT DIAM. (in.)	
			MIN	MAX	MIN	MAX	MIN	MAX	MIN	MAX	CLASS 1	CLASS 2
21W	AF 181	145T	21.2	22.1	18.3	19.3	17.5	19.0	21.2	22.0	1-11/16	1-15/16
		182T	20.4	21.3	17.6	18.6	16.8	18.5	20.4	21.3		
		184T	20.4	21.3	17.6	18.6	16.8	18.5	20.4	21.3		
		213T	19.9	20.7	17.1	18.2	16.3	18.0	19.9	20.7		
		215T	19.9	20.7	17.1	18.2	16.3	18.0	19.9	20.7		
		254T	19.1	20.1	16.4	17.6	15.7	17.5	19.1	20.1		
		256T	19.1	20.1	16.4	17.6	15.7	17.5	19.1	20.1		
	AF 201	145T	22.3	22.9	18.8	19.7	18.7	19.6	22.3	22.9	1-11/16	1-15/16
		182T	21.5	22.2	18.0	18.9	17.9	18.8	21.5	22.2		
		184T	21.5	22.2	18.0	18.9	17.9	18.8	21.5	22.2		
		213T	20.9	21.5	17.4	18.4	17.3	18.3	20.9	21.5		
		215T	20.9	21.5	17.4	18.4	17.3	18.3	20.9	21.5		
		254T	20.0	20.7	16.7	17.8	16.6	17.7	20.0	20.7		
		256T	20.0	20.7	16.7	17.8	16.6	17.7	20.0	20.7		
		284T	19.4	20.3	16.2	17.3	16.1	17.2	19.4	20.3		
22T	AF 181	56	31.0	33.0	25.0	27.0	28.7	30.7	27.1	29.1	1-11/16	1-15/16
		143T	31.0	33.0	25.0	27.0	28.7	30.7	27.1	29.1		
		145T	31.0	33.0	25.0	27.0	28.7	30.7	27.1	29.1		
		182T	30.5	32.5	24.5	26.5	28.3	30.3	26.6	28.6		
		184T	30.5	32.5	24.5	26.5	28.3	30.3	26.6	28.6		
		213T	30.1	32.1	24.2	26.2	28.0	30.0	26.1	28.1		
		215T	30.1	32.1	24.2	26.2	28.0	30.0	26.1	28.1		
		254T	29.7	31.7	23.8	25.8	27.7	29.7	25.6	27.6		
		256T	29.7	31.7	23.8	25.8	27.7	29.7	25.6	27.6		
	AF 201	56	33.2	35.2	28.1	30.1	30.9	32.9	30.5	32.5	1-11/16	1-15/16
		143T	33.2	35.2	28.1	30.1	30.9	32.9	30.5	32.5		
		145T	33.2	35.2	28.1	30.1	30.9	32.9	30.5	32.5		
		182T	32.6	34.6	27.7	29.7	30.5	32.5	30.0	32.0		
		184T	32.6	34.6	27.7	29.7	30.5	32.5	30.0	32.0		
		213T	32.3	34.3	27.3	29.3	30.2	32.2	29.5	31.5		
		215T	32.3	34.3	27.3	29.3	30.2	32.2	29.5	31.5		
		254T	31.8	33.8	26.9	28.9	29.8	31.8	29.0	31.0		
		256T	31.8	33.8	26.9	28.9	29.8	31.8	29.0	31.0		
		284T	31.4	33.4	26.6	28.6	29.6	31.6	28.6	30.6		
		286T	31.4	33.4	26.6	28.6	29.6	31.6	28.6	30.6		
25W	AF 201	145T	22.3	22.9	18.8	19.7	18.7	19.6	22.3	22.9	1-11/16	1-15/16
		182T	21.5	22.2	18.0	18.9	17.9	18.8	21.5	22.2		
		184T	21.5	22.2	18.0	18.9	17.9	18.8	21.5	22.2		
		213T	20.9	21.5	17.4	18.4	17.3	18.3	20.9	21.5		
		215T	20.9	21.5	17.4	18.4	17.3	18.3	20.9	21.5		
		254T	20.0	20.7	16.7	17.8	16.6	17.7	20.0	20.7		
		256T	20.0	20.7	16.7	17.8	16.6	17.7	20.0	20.7		
		284T	19.4	20.3	16.2	17.3	16.1	17.2	19.4	20.3		
	AF 221	145T	28.8	29.6	25.7	26.8	25.5	26.6	28.8	29.6	1-15/16	2-3/16
		182T	28.0	29.0	25.0	26.2	24.9	25.9	28.0	29.0		
		184T	28.0	29.0	25.0	26.2	24.9	25.9	28.0	29.0		
		213T	27.5	28.5	24.6	25.8	24.4	25.6	27.5	28.5		
		215T	27.5	28.5	24.6	25.8	24.4	25.6	27.5	28.5		
		254T	26.8	27.8	24.0	25.3	23.8	25.1	26.8	27.8		
		256T	26.8	27.8	24.0	25.3	23.8	25.1	26.8	27.8		
		284T	26.3	27.4	23.6	25.0	23.4	24.7	26.3	27.4		
		286T	26.3	27.4	23.6	25.0	23.4	24.7	26.3	27.4		

Table 23 — Airfoil Fan Drive Centerline Distances in Inches (cont)

39M UNIT SIZE	FAN MODEL NO.	MOTOR SIZE	BHF/BHR		DBF/DBR		THF/THR		UBF/UBR		FAN SHAFT DIAM. (in.)	
			MIN	MAX	MIN	MAX	MIN	MAX	MIN	MAX	CLASS 1	CLASS 2
25T	AF 201	56	33.2	35.2	28.1	30.1	30.9	32.9	30.5	32.5	1-11/16	1-15/16
		143T	33.2	35.2	28.1	30.1	30.9	32.9	30.5	32.5		
		145T	33.2	35.2	28.1	30.1	30.9	32.9	30.5	32.5		
		182T	32.6	34.6	27.7	29.7	30.5	32.5	30.0	32.0		
		184T	32.6	34.6	27.7	29.7	30.5	32.5	30.0	32.0		
		213T	32.3	34.3	27.3	29.3	30.2	32.2	29.5	31.5		
		215T	32.3	34.3	27.3	29.3	30.2	32.2	29.5	31.5		
		254T	31.8	33.8	26.9	28.9	29.8	31.8	29.0	31.0		
		256T	31.8	33.8	26.9	28.9	29.8	31.8	29.0	31.0		
		284T	31.4	33.4	26.6	28.6	29.6	31.6	28.6	30.6		
		286T	31.4	33.4	26.6	28.6	29.6	31.6	28.6	30.6		
	AF 221	56	35.3	37.3	29.2	31.2	32.8	34.8	32.0	34.0	1-15/16	2-3/16
		143T	35.3	37.3	29.2	31.2	32.8	34.8	32.0	34.0		
		145T	35.3	37.3	29.2	31.2	32.8	34.8	32.0	34.0		
		182T	34.7	36.7	28.7	30.7	32.3	34.3	31.4	33.4		
		184T	34.7	36.7	28.7	30.7	32.3	34.3	31.4	33.4		
		213T	34.3	36.3	28.4	30.4	32.0	34.0	30.9	32.9		
		215T	34.3	36.3	28.4	30.4	32.0	34.0	30.9	32.9		
		254T	33.8	35.8	27.9	29.9	31.5	33.5	30.4	32.4		
		256T	33.8	35.8	27.9	29.9	31.5	33.5	30.4	32.4		
		284T	33.4	35.4	27.5	29.5	31.2	33.2	29.9	31.9		
		286T	33.4	35.4	27.5	29.5	31.2	33.2	29.9	31.9		
30W	AF 221	182T	27.4	28.9	24.2	25.8	24.1	25.7	27.4	28.9	1-15/16	2-3/16
		184T	27.4	28.9	24.2	25.8	24.1	25.7	27.4	28.9		
		213T	26.9	28.4	23.7	25.5	23.7	25.5	26.9	28.4		
		215T	26.9	28.4	23.7	25.5	23.7	25.5	26.9	28.4		
		254T	26.1	27.7	23.1	25.0	23.0	24.9	26.1	27.7		
		256T	26.1	27.7	23.1	25.0	23.0	24.9	26.1	27.7		
		284T	25.6	27.3	22.7	24.5	22.6	24.6	25.6	27.3		
		286T	25.6	27.3	22.7	24.5	22.6	24.6	25.6	27.3		
		324T	24.9	26.7	22.1	24.0	22.1	24.2	24.9	26.7		
30T	AF 201	56	33.2	35.2	28.1	30.1	30.9	32.9	30.5	32.5	1-11/16	1-15/16
		143T	33.2	35.2	28.1	30.1	30.9	32.9	30.5	32.5		
		145T	33.2	35.2	28.1	30.1	30.9	32.9	30.5	32.5		
		182T	32.6	34.6	27.7	29.7	30.5	32.5	30.0	32.0		
		184T	32.6	34.6	27.7	29.7	30.5	32.5	30.0	32.0		
		213T	32.3	34.3	27.3	29.3	30.2	32.2	29.5	31.5		
		215T	32.3	34.3	27.3	29.3	30.2	32.2	29.5	31.5		
		254T	31.8	33.8	26.9	28.9	29.8	31.8	29.0	31.0		
		256T	31.8	33.8	26.9	28.9	29.8	31.8	29.0	31.0		
		284T	31.4	33.4	26.6	28.6	29.6	31.6	28.6	30.6		
		286T	31.4	33.4	26.6	28.6	29.6	31.6	28.6	30.6		
	AF 221	182T	37.2	39.2	30.4	32.4	35.0	37.0	32.9	34.9	1-15/16	2-3/16
		184T	37.2	39.2	30.4	32.4	35.0	37.0	32.9	34.9		
		213T	36.8	38.8	30.0	32.0	34.7	36.7	32.5	34.5		
		215T	36.8	38.8	30.0	32.0	34.7	36.7	32.5	34.5		
		254T	36.3	38.3	29.6	31.6	34.3	36.3	31.9	33.9		
		256T	36.3	38.3	29.6	31.6	34.3	36.3	31.9	33.9		
		284T	36.0	38.0	29.2	31.2	34.0	36.0	31.5	33.5		
		286T	36.0	38.0	29.2	31.2	34.0	36.0	31.5	33.5		
		324T	35.5	37.5	28.8	30.8	33.7	35.7	31.0	33.0		
		326T	35.5	37.5	28.8	30.8	33.7	35.7	31.0	33.0		

Table 23 — Airfoil Fan Drive Centerline Distances in Inches (cont)

39M UNIT SIZE	FAN MODEL NO.	MOTOR SIZE	BHF/BHR		DBF/DBR		THF/THR		UBF/UBR		FAN SHAFT DIAM. (in.)	
			MIN	MAX	MIN	MAX	MIN	MAX	MIN	MAX	CLASS 1	CLASS 2
35T	AF 241	182T	40.6	42.6	33.6	35.6	36.8	38.8	36.4	38.4	2-3/16	2-7/16
		184T	40.6	42.6	33.6	35.6	36.8	38.8	36.4	38.4		
		213T	40.1	42.1	33.2	35.2	36.5	38.5	36.0	38.0		
		215T	40.1	42.1	33.2	35.2	36.5	38.5	36.0	38.0		
		254T	39.6	41.6	32.7	34.7	36.1	38.1	35.4	37.4		
		256T	39.6	41.6	32.7	34.7	36.1	38.1	35.4	37.4		
		284T	39.2	41.2	32.4	34.4	35.8	37.8	35.0	37.0		
		286T	39.2	41.2	32.4	34.4	35.8	37.8	35.0	37.0		
		324T	38.6	40.6	32.0	34.0	35.4	37.4	34.4	36.4		
		326T	38.6	40.6	32.0	34.0	35.4	37.4	34.4	36.4		
	AF 271	182T	42.3	44.2	33.6	35.7	38.5	40.7	36.7	38.5	2-3/16	2-7/16
		184T	42.3	44.2	33.6	35.7	38.5	40.7	36.7	38.5		
		213T	41.9	43.8	33.2	35.4	38.2	40.4	36.2	38.1		
		215T	41.9	43.8	33.2	35.4	38.2	40.4	36.2	38.1		
		254T	41.3	43.3	32.8	34.9	37.8	40.1	35.6	37.6		
		256T	41.3	43.3	32.8	34.9	37.8	40.1	35.6	37.6		
36W	AF 241	184T	26.0	27.3	20.2	22.9	20.2	22.0	24.3	25.7	2-3/16	2-7/16
		213T	25.4	26.7	19.7	22.5	19.7	21.6	23.7	25.2		
		215T	25.4	26.7	19.7	22.5	19.7	21.6	23.7	25.2		
		254T	24.6	25.9	19.0	21.9	19.0	21.0	22.9	24.4		
		256T	24.6	25.9	19.0	21.9	19.0	21.0	22.9	24.4		
		284T	23.9	25.4	18.5	21.4	18.5	20.5	22.3	23.9		
		286T	23.9	25.4	18.5	21.4	18.5	20.5	22.3	23.9		
		324T	23.1	24.6	17.8	20.9	17.8	20.0	21.5	23.2		
		326T	23.1	24.6	17.8	20.9	17.8	20.0	21.5	23.2		
	AF 271	182T	28.6	29.7	N/A	N/A	22.2	23.9	27.0	28.1	2-3/16	2-7/16
		184T	28.6	29.7	N/A	N/A	22.2	23.9	27.0	28.1		
		213T	27.9	29.1	N/A	N/A	21.6	23.4	26.4	28.5		
		215T	27.9	29.1	N/A	N/A	21.6	23.4	26.4	28.5		
		254T	27.1	28.3	N/A	N/A	20.9	22.7	25.5	27.7		
37T	AF 241	182T	40.6	42.6	33.6	35.6	36.8	38.8	36.4	38.4	2-3/16	2-7/16
		184T	40.6	42.6	33.6	35.6	36.8	38.8	36.4	38.4		
		213T	40.1	42.1	33.2	35.2	36.5	38.5	36.0	38.0		
		215T	40.1	42.1	33.2	35.2	36.5	38.5	36.0	38.0		
		254T	39.6	41.6	32.7	34.7	36.1	38.1	35.4	37.4		
		256T	39.6	41.6	32.7	34.7	36.1	38.1	35.4	37.4		
		284T	39.2	41.2	32.4	34.4	35.8	37.8	35.0	37.0		
		286T	39.2	41.2	32.4	34.4	35.8	37.8	35.0	37.0		
		324T	38.6	40.6	32.0	34.0	35.4	37.4	34.4	36.4		
		326T	38.6	40.6	32.0	34.0	35.4	37.4	34.4	36.4		
	AF 271	182T	42.3	44.2	33.6	35.7	38.5	40.7	36.7	38.5	2-3/16	2-7/16
		184T	42.3	44.2	33.6	35.7	38.5	40.7	36.7	38.5		
		213T	41.9	43.8	33.2	35.4	38.2	40.4	36.2	38.1		
		215T	41.9	43.8	33.2	35.4	38.2	40.4	36.2	38.1		
		254T	41.3	43.3	32.8	34.9	37.8	40.1	35.6	37.6		
		256T	41.3	43.3	32.8	34.9	37.8	40.1	35.6	37.6		
40W	AF 271	184T	30.5	32.3	24.6	26.8	24.6	26.8	24.6	27.0	2-3/16	2-7/16
		213T	29.9	31.7	24.1	26.3	24.1	26.3	24.1	26.5		
		215T	29.9	31.7	24.1	26.3	24.1	26.3	24.1	26.5		
		254T	29.1	31.0	23.5	25.8	23.5	25.8	23.5	25.9		
		256T	29.1	31.0	23.5	25.8	23.5	25.8	23.5	25.9		
		284T	28.5	30.4	23.0	25.3	23.0	25.3	23.0	25.1		
		286T	28.5	30.4	23.0	25.3	23.0	25.3	23.0	25.1		
		324T	27.7	29.7	22.4	28.8	22.4	24.8	22.4	25.0		
		326T	27.7	29.7	22.4	24.8	22.4	24.8	22.4	25.0		
	AF 301	182T	30.9	32.1	N/A	N/A	24.3	26.0	30.1	31.3	2-7/16	1-15/16
		184T	30.9	32.1	N/A	N/A	24.3	26.0	30.1	31.3		
		213T	30.3	31.4	N/A	N/A	23.7	25.5	29.4	30.7		
		215T	30.3	31.4	N/A	N/A	23.7	25.5	29.4	30.7		
		254T	29.4	30.6	N/A	N/A	23.0	24.8	28.5	29.8		

Table 23 — Airfoil Fan Drive Centerline Distances in Inches (cont)

39M UNIT SIZE	FAN MODEL NO.	MOTOR SIZE	BHF/BHR		DBF/DBR		THF/THR		UBF/UBR		FAN SHAFT DIAM. (in.)	
			MIN	MAX	MIN	MAX	MIN	MAX	MIN	MAX	CLASS 1	CLASS 2
42T	AF 271	182T	42.3	44.2	33.6	35.7	38.5	40.7	36.7	38.5	2-3/16	2-7/16
		184T	42.3	44.2	33.6	35.7	38.5	40.7	36.7	38.5		
		213T	41.9	43.8	33.2	35.4	38.2	40.4	36.2	38.1		
		215T	41.9	43.8	33.2	35.4	38.2	40.4	36.2	38.1		
		254T	41.3	43.3	32.8	34.9	37.8	40.1	35.6	37.6		
		256T	41.3	43.3	32.8	34.9	37.8	40.1	35.6	37.6		
		284T	40.9	43.0	32.4	34.7	37.5	39.8	35.2	37.2		
		286T	40.9	43.0	32.4	34.7	37.5	39.8	35.2	37.2		
		324T	40.4	42.5	32.0	34.3	37.2	39.5	34.7	36.7		
		326T	40.4	42.5	32.0	34.3	37.2	39.5	34.7	36.7		
	AF 301	182T	45.4	47.4	34.3	36.5	41.4	43.7	39.9	41.9	2-7/16	1-15/16
		184T	45.4	47.4	34.3	36.5	41.4	43.7	39.9	41.9		
		213T	45.0	47.0	34.0	36.2	41.1	43.4	39.4	41.4		
		215T	45.0	47.0	34.0	36.2	41.1	43.4	39.4	41.4		
		254T	44.4	46.5	33.6	35.9	40.7	43.0	38.8	40.8		
		256T	44.4	46.5	33.6	35.9	40.7	43.0	38.8	40.8		
		284T	44.0	46.1	33.3	35.6	40.4	42.7	38.4	40.4		
		286T	44.0	46.1	33.3	35.6	40.4	42.7	38.4	40.4		
		324T	43.5	45.6	33.0	35.3	40.0	42.4	37.8	39.9		
		326T	43.5	45.6	33.0	35.3	40.0	42.4	37.8	39.9		
50W	AF 301	213T	32.9	34.5	24.5	27.0	27.0	29.1	32.1	33.8	2-7/16	1-15/16
		215T	32.9	34.5	24.5	27.0	27.0	29.1	32.1	33.8		
		254T	32.1	33.8	24.0	26.4	26.3	28.5	31.3	33.0		
		256T	32.1	33.8	24.0	26.4	26.3	28.5	31.3	33.0		
		284T	31.5	33.2	23.6	26.1	25.8	28.1	30.7	32.4		
		286T	31.5	33.2	23.6	26.1	25.8	28.1	30.7	32.4		
		324T	30.7	32.5	23.0	25.6	25.2	27.5	29.9	31.8		
		326T	30.7	32.5	23.0	25.6	25.2	27.5	29.9	31.8		
		364T	30.4	31.8	22.5	25.2	24.6	27.0	29.2	31.1		
	AF 331	184T	34.8	36.0	N/A	N/A	27.3	29.0	33.9	35.1	2-7/16	2-3/16
		213T	34.1	35.3	N/A	N/A	26.7	28.4	33.3	34.5		
		215T	34.1	35.3	N/A	N/A	26.7	28.4	33.3	34.5		
		254T	33.2	34.5	N/A	N/A	25.9	27.7	32.4	33.7		
		256T	33.2	34.5	N/A	N/A	25.9	27.7	32.4	33.7		
51T	AF 301	213T	46.8	48.8	35.8	38.1	43.1	45.3	41.1	43.0	2-7/16	1-15/16
		215T	46.8	48.8	35.8	38.1	43.1	45.3	41.1	43.0		
		254T	46.3	48.3	35.5	37.8	42.7	44.9	40.5	42.4		
		256T	46.3	48.3	35.5	37.8	42.7	44.9	40.5	42.4		
		284T	45.9	47.9	35.2	37.5	42.4	44.6	40.1	42.0		
		286T	45.9	47.9	35.2	37.5	42.4	44.6	40.1	42.0		
		324T	45.4	47.4	34.9	37.2	42.0	44.3	39.5	41.5		
		326T	45.4	47.4	34.9	37.2	42.0	44.3	39.5	41.5		
		364T	44.9	47.0	34.6	36.9	41.7	44.0	39.0	41.0		
		365T	44.9	47.0	34.6	36.9	41.7	44.0	39.0	41.0		
	AF 331	182T	54.1	56.1	42.4	44.6	49.8	52.0	48.4	50.3	2-7/16	2-3/16
		184T	54.1	56.1	42.4	44.6	49.8	52.0	48.4	50.3		
		213T	53.7	55.7	42.1	44.4	49.5	51.8	47.9	49.8		
		215T	53.7	55.7	42.1	44.4	49.5	51.8	47.9	49.8		
		254T	53.1	55.2	41.7	44.0	49.1	51.4	47.4	49.3		
		256T	53.1	55.2	41.7	44.0	49.1	51.4	47.4	49.3		
		284T	52.7	54.8	41.5	43.8	48.9	51.1	47.0	48.9		
		286T	52.7	54.8	41.5	43.8	48.9	51.1	47.0	48.9		
		324T	52.2	54.3	41.1	43.5	48.4	50.8	46.4	48.4		
		326T	52.2	54.3	41.1	43.5	48.4	50.8	46.4	48.4		

Table 23 — Airfoil Fan Drive Centerline Distances in Inches (cont)

39M UNIT SIZE	FAN MODEL NO.	MOTOR SIZE	BHF/BHR		DBF/DBR		THF/THR		UBF/UBR		FAN SHAFT DIAM. (in.)	
			MIN	MAX	MIN	MAX	MIN	MAX	MIN	MAX	CLASS 1	CLASS 2
58T	AF 331	182T	54.9	56.8	43.3	45.6	50.8	52.9	49.2	51.1	2-7/16	2-3/16
		184T	54.9	56.8	43.3	45.6	50.8	52.9	49.2	51.1		
		213T	54.6	56.4	43.0	45.3	50.4	52.6	48.7	50.7		
		215T	54.6	56.4	43.0	45.3	50.4	52.6	48.7	50.7		
		254T	54.0	55.9	42.7	45.0	50.1	52.3	48.2	50.1		
		256T	54.0	55.9	42.7	45.0	50.1	52.3	48.2	50.1		
		284T	53.6	55.6	42.4	44.7	49.8	52.0	47.8	49.7		
		286T	53.6	55.6	42.4	44.7	49.8	52.0	47.8	49.7		
		324T	53.2	55.1	42.1	44.4	49.4	51.7	47.3	49.3		
		326T	53.2	55.1	42.1	44.4	49.4	51.7	47.3	49.3		
		364T	52.6	54.6	41.8	44.1	49.1	51.4	46.8	48.8		
		365T	52.6	54.6	41.8	44.1	49.1	51.4	46.8	48.8		
	AF 361	182T	57.4	59.4	42.1	44.1	51.9	54.3	48.4	50.3	2-11/16	2-3/16
		184T	57.4	59.4	42.1	44.1	51.9	54.3	48.4	50.3		
		213T	57.1	59.1	41.6	43.6	51.6	53.9	47.9	49.8		
		215T	57.1	59.1	41.6	43.6	51.6	53.9	47.9	49.8		
		254T	56.5	58.5	41.2	43.2	51.1	53.5	47.3	49.1		
		256T	56.5	58.5	41.2	43.2	51.1	53.5	47.3	49.1		
		284T	56.1	58.1	40.8	42.8	50.8	53.2	46.8	48.7		
		286T	56.1	58.1	40.8	42.8	50.8	53.2	46.8	48.7		
		324T	55.5	57.6	40.4	42.4	50.4	52.8	46.2	48.1		
		326T	55.5	57.6	40.4	42.4	50.4	52.8	46.2	48.1		
		364T	54.9	57.1	40.0	42.0	50.0	52.4	45.6	47.5		
		365T	54.9	57.1	40.0	42.0	50.0	52.4	45.6	47.5		
61W	AF 331	213T	37.4	39.0	28.1	29.1	30.9	33.0	35.8	38.4	2-7/16	2-3/16
		215T	37.4	39.0	28.1	29.1	30.9	33.0	35.8	38.4		
		254T	36.6	38.3	27.5	28.5	30.2	32.3	35.0	37.6		
		256T	36.6	38.3	27.5	28.5	30.2	32.3	35.0	37.6		
		284T	36.1	37.8	27.1	28.1	29.7	31.9	34.4	37.1		
		286T	36.1	37.8	27.1	28.1	29.7	31.9	34.4	37.1		
		324T	35.3	37.0	26.5	27.6	29.0	31.3	33.6	36.3		
		326T	35.3	37.0	26.5	27.6	29.0	31.3	33.6	36.3		
		364T	34.5	36.3	26.0	27.1	28.4	30.8	32.9	35.6		
		365T	34.5	36.3	26.0	27.1	28.4	30.8	32.9	35.6		
	AF 361	184T	40.0	41.4	N/A	N/A	31.0	33.2	38.3	39.5	2-11/16	2-3/16
		213T	39.1	40.7	N/A	N/A	30.3	32.7	37.4	38.6		
		215T	39.1	40.7	N/A	N/A	30.3	32.7	37.4	38.6		
		254T	38.2	39.9	N/A	N/A	29.5	33.0	36.5	37.8		
		256T	38.2	39.9	N/A	N/A	29.5	33.0	36.5	37.8		
72W	AF 32	182T	35.7	38.2	18.2	23.0	27.2	30.9	27.7	30.1	2-3/16	2-3/16
		184T	35.7	38.2	18.2	23.0	27.2	30.9	27.7	30.1		
		213T	35.1	37.6	17.9	22.8	26.7	30.4	27.1	29.5		
		215T	35.1	37.6	17.9	22.8	26.7	30.4	27.1	29.5		
		254T	34.3	36.9	17.4	22.5	26.0	29.9	26.2	28.8		
		256T	34.3	36.9	17.4	22.5	26.0	29.9	26.2	28.8		
		284T	33.6	36.4	17.1	22.2	25.5	29.5	25.6	28.2		
		286T	33.6	36.4	17.1	22.2	25.5	29.5	25.6	28.2		
		324T	32.8	35.6	16.8	22.0	24.8	29.0	24.7	27.5		
		326T	32.8	35.6	16.8	22.0	24.8	29.0	24.7	27.5		
		364T	32.0	34.9	16.5	21.8	24.2	28.5	23.9	26.8		
		365T	32.0	34.9	16.5	21.8	24.2	28.5	23.9	26.8		
	AF 36	182T	40.6	43.0	21.9	26.7	31.0	34.6	32.3	34.8	2-7/16	2-7/16
		184T	40.6	43.0	21.9	26.7	31.0	34.6	32.3	34.8		
		213T	40.0	42.4	21.6	26.4	30.4	34.1	31.7	34.2		
		215T	40.0	42.4	21.6	26.4	30.4	34.1	31.7	34.2		
		254T	39.1	41.7	21.1	26.1	29.7	33.6	30.9	33.5		
		256T	39.1	41.7	21.1	26.1	29.7	33.6	30.9	33.5		
		284T	38.5	41.1	20.8	25.8	29.2	33.1	30.2	32.9		
		286T	38.5	41.1	20.8	25.8	29.2	33.1	30.2	32.9		
		324T	37.7	40.4	20.4	25.5	28.6	32.6	29.4	32.2		
		326T	37.7	40.4	20.4	25.5	28.6	32.6	29.4	32.2		
		364T	36.8	39.7	20.1	25.3	27.9	32.1	28.6	31.5		
		365T	36.8	39.7	20.1	25.3	27.9	32.1	28.6	31.5		

Table 23 — Airfoil Fan Drive Centerline Distances in Inches (cont)

39M UNIT SIZE	FAN MODEL NO.	MOTOR SIZE	BHF/BHR		DBF/DBR		THF/THR		UBF/UBR		FAN SHAFT DIAM. (in.)	
			MIN	MAX	MIN	MAX	MIN	MAX	MIN	MAX	CLASS 1	CLASS 2
85W, 92W	AF 36	182T	40.6	43.0	21.9	26.7	31.0	34.6	32.3	34.8	2-7/16	2-7/16
		184T	40.6	43.0	21.9	26.7	31.0	34.6	32.3	34.8		
		213T	40.0	42.4	21.6	26.4	30.4	34.1	31.7	34.2		
		215T	40.0	42.4	21.6	26.4	30.4	34.1	31.7	34.2		
		254T	39.1	41.7	21.1	26.1	29.7	33.6	30.9	33.5		
		256T	39.1	41.7	21.1	26.1	29.7	33.6	30.9	33.5		
		284T	38.5	41.1	20.8	25.8	29.2	33.1	30.2	32.9		
		286T	38.5	41.1	20.8	25.8	29.2	33.1	30.2	32.9		
		324T	37.7	40.4	20.4	25.5	28.6	32.6	29.4	32.2		
		326T	37.7	40.4	20.4	25.5	28.6	32.6	29.4	32.2		
		364T	36.8	39.7	20.1	25.3	27.9	32.1	28.6	31.5		
		365T	36.8	39.7	20.1	25.3	27.9	32.1	28.6	31.5		
	AF 40	213T	44.3	46.7	24.8	29.7	33.7	37.4	35.8	38.4	2-3/16	2-7/16
		215T	44.3	46.7	24.8	29.7	33.7	37.4	35.8	38.4		
		254T	43.5	46.0	24.4	29.4	33.0	36.8	35.0	37.7		
		256T	43.5	46.0	24.4	29.4	33.0	36.8	35.0	37.7		
		284T	42.9	45.4	24.1	29.1	32.5	36.3	34.4	37.1		
		286T	42.9	45.4	24.1	29.1	32.5	36.3	34.4	37.1		
		324T	42.0	44.6	23.7	28.8	31.8	35.8	33.6	36.4		
		326T	42.0	44.6	23.7	28.8	31.8	35.8	33.6	36.4		
		364T	41.2	43.9	23.4	28.6	31.2	35.2	32.8	35.7		
		365T	41.2	43.9	23.4	28.6	31.2	35.2	32.8	35.7		
		404T	40.4	43.2	23.1	28.4	30.5	34.7	32.0	35.0		
		405T	40.4	43.2	23.1	28.4	30.5	34.7	32.0	35.0		
110W	AF 40	213T	44.3	46.7	24.8	29.7	33.7	37.4	35.8	38.4	2-3/16	2-7/16
		215T	44.3	46.7	24.8	29.7	33.7	37.4	35.8	38.4		
		254T	43.5	46.0	24.4	29.4	33.0	36.8	35.0	37.7		
		256T	43.5	46.0	24.4	29.4	33.0	36.8	35.0	37.7		
		284T	42.9	45.4	24.1	29.1	32.5	36.3	34.4	37.1		
		286T	42.9	45.4	24.1	29.1	32.5	36.3	34.4	37.1		
		324T	42.0	44.6	23.7	28.8	31.8	35.8	33.6	36.4		
		326T	42.0	44.6	23.7	28.8	31.8	35.8	33.6	36.4		
		364T	41.2	43.9	23.4	28.6	31.2	35.2	32.8	35.7		
		365T	41.2	43.9	23.4	28.6	31.2	35.2	32.8	35.7		
		404T	40.4	43.2	23.1	28.4	30.5	34.7	32.0	35.0		
		405T	40.4	43.2	23.1	28.4	30.5	34.7	32.0	35.0		
	AF 44	213T	47.8	48.9	35.8	39.7	32.7	35.1	43.9	46.8	2-15/16	2-15/16
		215T	47.8	48.9	35.8	39.7	32.7	35.1	43.9	46.8		
		254T	46.9	48.0	35.1	39.2	31.9	34.4	43.1	46.1		
		256T	46.9	48.0	35.1	39.2	31.9	34.4	43.1	46.1		
		284T	46.2	47.3	34.7	38.8	31.2	33.8	42.5	45.6		
		286T	46.2	47.3	34.7	38.8	31.2	33.8	42.5	45.6		
		324T	45.2	46.5	34.0	38.3	30.4	33.1	41.7	44.9		
		326T	45.2	46.5	34.0	38.3	30.4	33.1	41.7	44.9		
		364T	44.3	45.6	33.4	37.8	29.6	32.4	41.0	44.2		
		365T	44.3	45.6	33.4	37.8	29.6	32.4	41.0	44.2		
		404T	43.4	44.8	32.9	37.3	28.7	31.7	40.2	43.6		
		405T	43.4	44.8	32.9	37.3	28.7	31.7	40.2	43.6		

LEGEND
BHF — Bottom Horizontal Front
BHR — Bottom Horizontal Rear
DBF — Downblast Front
DBR — Downblast Rear
THF — Top Horizontal Front
THR — Top Horizontal Rear
UBF — Upblast Front
UBR — Upblast Rear

PRE-INSTALLATION

Inspection

Inspect the unit; file a claim with the shipping company if the unit is damaged. Check the packing list to ensure that the correct items have been received and notify your Carrier representative of any discrepancy.

Rigging and Handling

To transfer the unit from the shipping platform to the storage or installation site, **refer to rigging label** on unit and these instructions.

⚠ CAUTION

A forklift truck cannot be used to move units or components. Failure to follow these safety precautions could lead to personal injury and/or equipment damage.

Base units are shipped fully assembled, except when sections are separately ordered. All 39M units can be rigged using the lifting brackets, as shown on the rigging label on the unit.

1. Lift the unit with slings and header bars, using clevises and pins in the large round holes in the unit's lifting brackets.
2. When the unit is in its final location, do not remove the caps from the coil connections until the coil is ready for piping. Do not remove grease from the fan shaft until the drive sheave is ready for installation.

Long-Term Storage

Store unit in a clean, dry place and protect it from weather and construction traffic.

1. The storage site should be level, rigid, and free of debris. If the site is in a heavy rain area, set the unit off of the ground.
2. Do not store the unit in a heavy traffic area or on a vibrating surface. Vibration can damage stationary bearings.
3. Ensure that all coil connections have shipping caps in place. Cover the entire unit with a waterproof tarpaulin or plastic coverall; if the unit is stored on the ground, extend the cover underneath the unit. Secure the cover with tiedowns. Do not remove cover or coil end caps until unit is ready for final installation.
4. Monthly — Move the coverall, enter the fan section through the access door or fan inlet, and slowly rotate the fan and motor by hand. This operation prevents bearing corrosion by redistributing the bearing grease.
5. Direct drive plenum fans with EC motors not operated for a lengthy period in installed condition shall be started and operated per the following:
   a. Dry environment - Run full speed for one hour at least every four months.
   b. Damp environment (outdoors, for example), run full speed for at least three hours every month.

Service Clearance

When planning the placement of the unit, ensure adequate space for service access. Typical service operations can require removing the coils and filters and accessing the motor and damper linkage. Refer to ***AHU*Builder**® program for recommended clearances.

Drain Positioning

To prevent build-up of condensate in the drain pan and ensure proper operation of the drain system, position the unit so that condensate drain can be properly trapped. Refer to the Condensate Drain section on page 142 in the Installation section.

Unit Suspension

Unit suspension methods are shown in Fig. 16. A field-supplied platform mount is recommended, especially for larger unit sizes. An in-line twin-beam mount is also recommended. See Fig. 16 and 17. Units can also be supported by suspending the unit from cross-beams at the joint between each unit component. Ensure that suspension rods are secured to adequately support the unit and that the rods extend entirely through their associated fasteners. Also ensure that suspension rods do not interfere with service access to the unit.

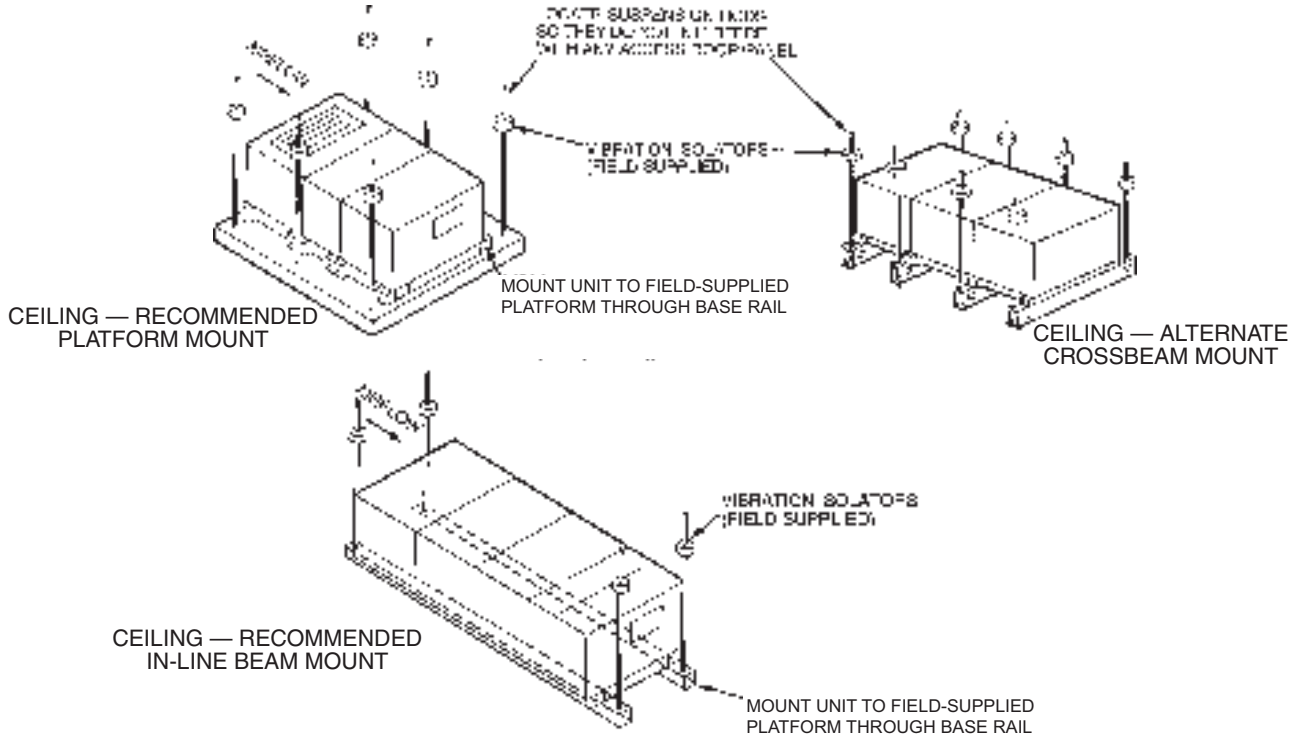

Fig. 16 — Unit Suspension

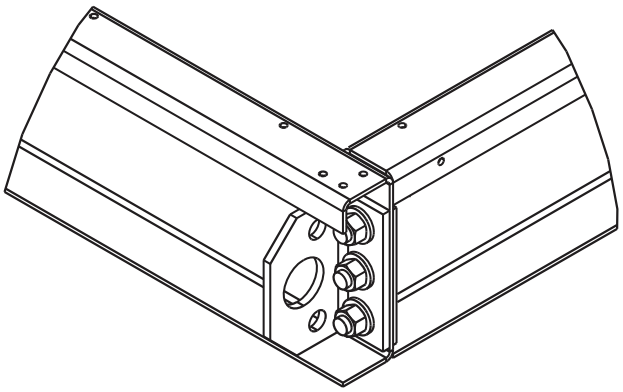

Fig. 17 — Lifting Lug Detail for Pad-Mounted Unit with or without Isolation

Internal Vibration Isolation

Units equipped with internal vibration isolation must be prepared as described in this section before they are installed.

For applications that do not require internal fan isolation, leave the holddown bracket screwed or bolted in place. Otherwise, the combination of internal and external unit isolation could lead to unwanted oscillation magnification.

REMOVING HOLDDOWN BOLTS, AIRFOIL, PLENUM AND FORWARD-CURVED FANS

Remove the holddown bolts (Fig. 18) as follows:

1. Open the fan access door.
2. Remove the bolts that fasten the fan sled to the holddown bracket (Fig. 18). Remove "S" shaped brackets.
3. Repeat Steps 1 and 2 on the opposite side of the fan section. Fan sled assembly should float on isolator springs when done.

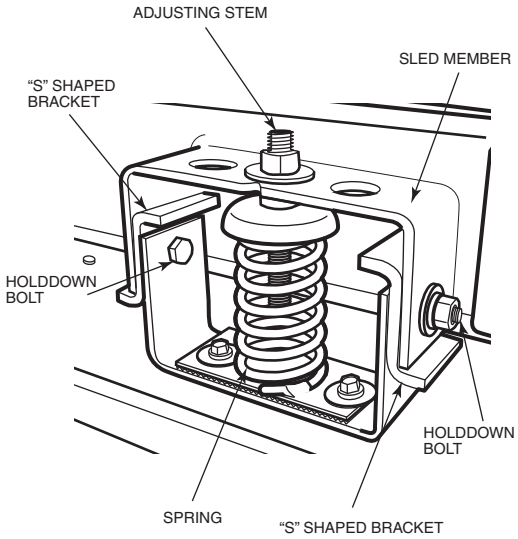

Fig. 18 — Spring Isolator and Holddown Bracket

ADJUSTING ISOLATOR SPRINGS

Units with factory-supplied motors and drives are preset to 13/16 ± 1/8-in. clearance between the base frame assembly and the bottom panels; field adjustment of the isolator springs is not normally required.

⚠ WARNING

When adjusting fan isolation components, DO NOT enter or reach into the fan cabinet while fan is running. Serious injury can result. Be sure to disconnect power and tag controls before making adjustments.

When field-supplied motors and drives have been installed, adjust the isolator springs as shown in Fig. 18 and described as follows:

1. Loosen the locknut on adjusting stem.
2. Turn the adjusting stem until the specified clearance of 13/16 ± 1/8-in. is obtained. (Turn clockwise to decrease clearance or counterclockwise to increase clearance.)
3. Tighten the locknut.
4. Repeat for each of the isolator springs and ensure that the fan sled is floating on the springs.

External Vibration Isolation

Install external vibration isolators per certified drawings, job specifications, and the instructions of the isolator manufacturer.

For applications that do not require internal fan isolation, leave the holddown bracket screwed or bolted in place. Otherwise, the combination of internal and external unit isolation could lead to unwanted oscillation magnification.

The coil piping must also be isolated or have flexible connectors to avoid coil header damage due to motion or vibration. Flexible connections should also be installed at the fan inlet (if ducted) and at the discharge.

Roof Curb

Roof curbs can be factory or field supplied for 39MW units and should be installed according to the manufacturer's instructions. Before installing roof curb, check overall unit length. Figure 19 shows AHU (air-handling unit) curb pocket dimensions.

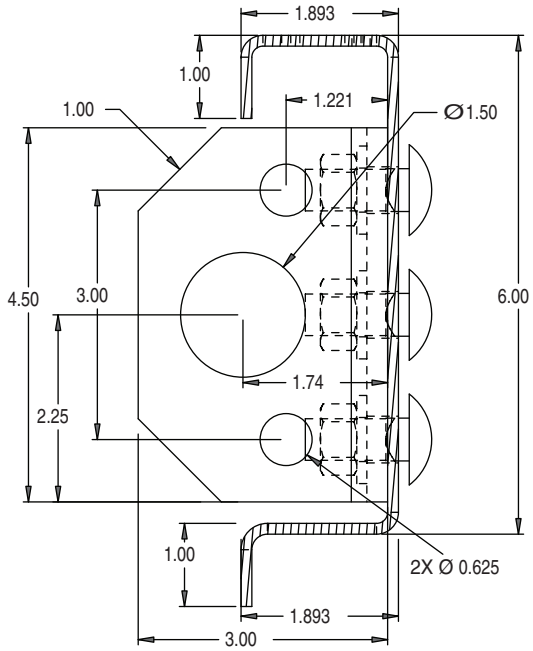

NOTE: All dimensions are shown in inches.

Fig. 19 — Curb Pocket Dimensions (Sizes 03-110 Typical)

Curbs are typically shipped knocked down and require field assembly as follows:

1. Curbs greater than 12 ft in airway length will be split and joined together by a splice plate. Butt the two sections and bolt together with the splice plate as shown in Fig. 20.
2. Arrange sides and ends together at right angles and bolt together using the corner bracket as shown in Fig. 21.
3. Fasten cross supports, when required, per the drawings with supplied screws as shown in Fig. 22.

The 14 in. tall curbs weigh 6 lb per linear foot; 24 in. curbs weigh 9 lb per linear foot.

IMPORTANT: Verify installed curb dimensions before attempting to rig the unit and install it on the curb.

Due to the pressure capabilities of the 39 Series air handlers, duct connections must be gasketed and screwed to the unit to prevent leakage. Refer to Duct Connections section on page 93. No provisions have been made to attach the ductwork to the curb. Dimensions for inlet and discharge locations are shown in drawings produced in ***AHU*Builder®** program.

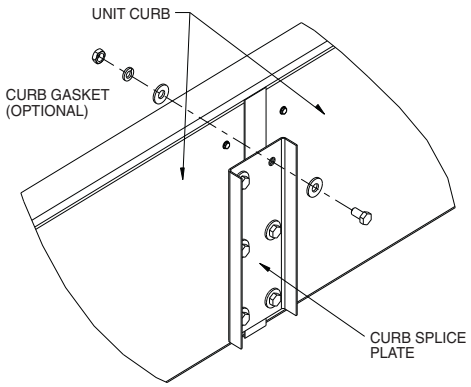

Fig. 20 — Splice Plate Usage

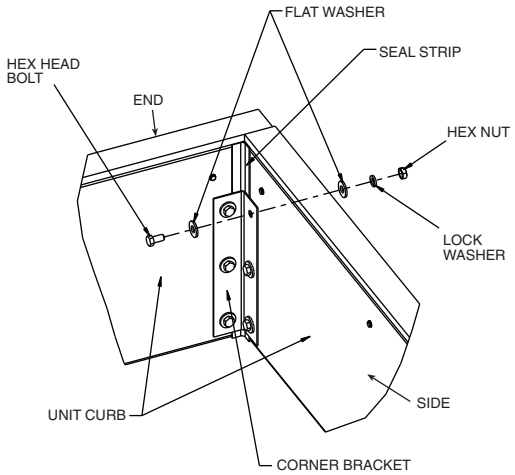

Fig. 21 — Corner Bracket

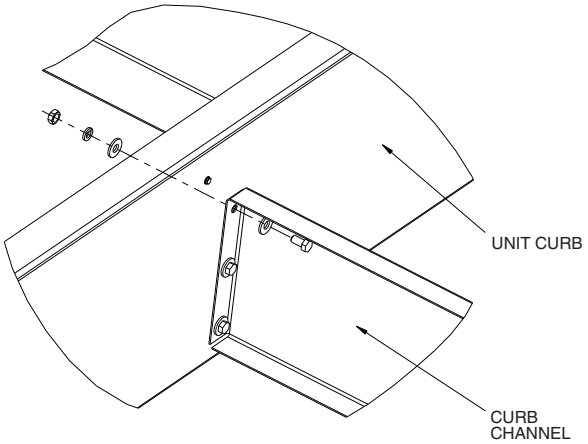

Fig. 22 — Fasten Cross Supports

The return and supply ducts must be supported independently from the unit. Do not exert weight or downward force on the unit other than minimal force required to attach ductwork.

Before the unit is installed, gasketing must be installed between the curb and unit as shown in Fig. 23. This gasket material is supplied by the curb manufacturer. If gasket is not supplied with the curb, recommended field-supplied gasket material is 1/2-in. thick by 2-in. wide closed cell neoprene.

When curb is installed, place gasket on curb without stretching or overlapping the material, which can cause gaps or leaks. Butt all joints evenly and avoid creating gaps where water can leak into the curb. Make sure seams in gasket material overlap seams in the curb rail. See Fig. 23 for installation details.

After gasket is in place, rig unit into position as described in Rigging and Handling section. Locate unit on curb so it is correctly oriented with respect to the curb inlet and discharge locations.

On curb installations, lower the unit directly into place, ensuring that the roof curb gasket does not shift or curl.

Caulk base rail seams to prevent water from entering the curb space. This pertains to single ship units and units with multiple splits.

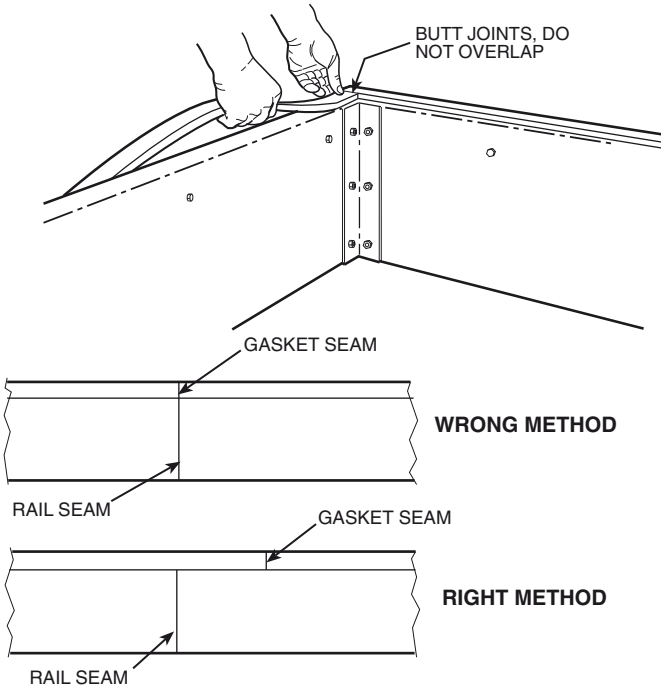

Fig. 23 — Install Gasketing

Pier or Beam Mount

As an alternative to curb mounting, units can also be mounted on I-beams or piers. For units mounted on I-beams, the beams must run the continuous length of the unit. If seismic criteria apply, crosspieces must be added between the beams, according to seismic calculations. For pier-mounted units, one pier must be installed in each corner of the unit, at the junction of the base rail corners.

For each additional 8 ft of length, for size 03-110 units, install one additional pier on each size of the unit at the junction of each section split underneath the base rails. See Fig. 24 for a typical installation.

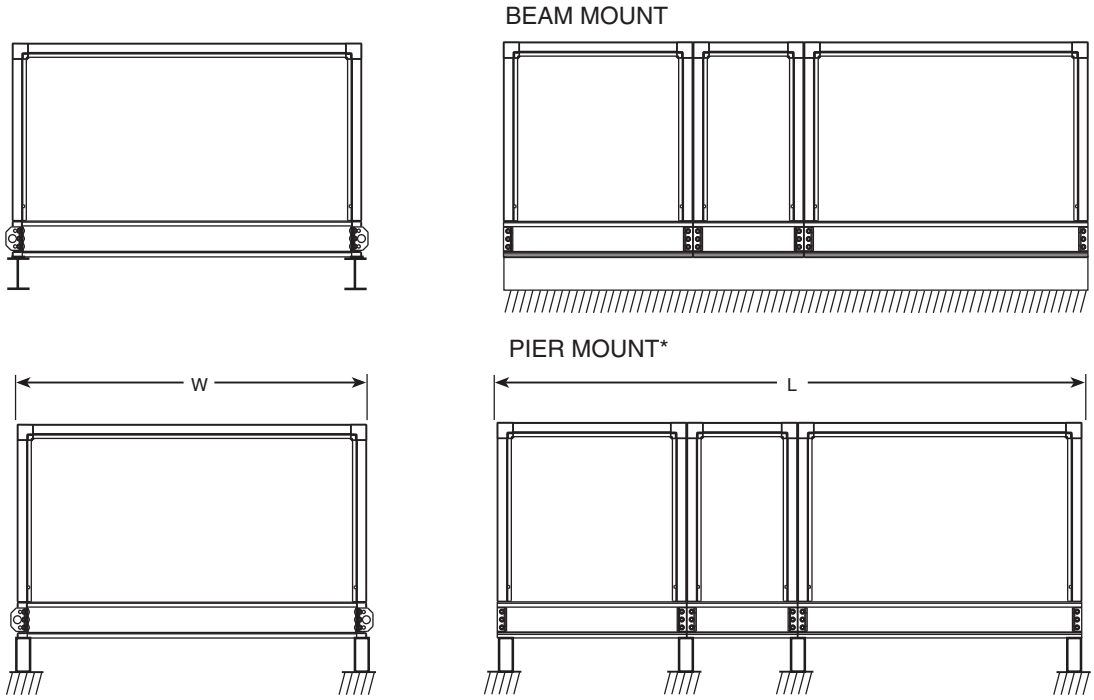

*Minimum number of piers shown for pier-mounted unit. See table on right for number of equally spaced piers required. For each additional 8 ft of unit length, add 2 piers.

QUANTITY OF PIERS REQUIRED

UNIT LENGTH "L", FT		
0-8	9-16	17-24
4	6	8

Fig. 24 — Pier or Beam Mounting

INSTALLATION

This section describes how to install 39M units, components, and component parts. Units specified on a single order are shipped with most components assembled in the specified airflow direction. When an upper component exceeds the 108-in. maximum height limit, it is shipped out of its operating position. Some component parts also require assembly or adjustment; see the section on each component type for specific instructions.

CAUTION

Failure to assemble the units according to the procedures set forth below is considered improper installation and abuse and may not only negatively impact the weathertight performance of the unit, but may also negatively affect the Carrier warranty.

Indoor and Outdoor Unit Shipping Split (All Sizes)

NOTE: The following hardware is included with the unit:

2 per split — 3/8 in.-16 nut
2 per split — 3/8 in.-16 x 8 in. screw
2 per split — 3/8 in. washer
2 per split — 1/2 in.-13 nut
2 per split — 1/2 in.-13 x 8 in. screw
2 per split — 1/2 in. washer
1 per Intelliclamp[1] connector — 5/16 in.-18 nut
1 per Intelliclamp connector — 5/16 in.-18 x 2-1/2 screw

Stacked units also include size AB 1/4 — 3/4 screws (quantity varies with unit size) and gasket required for field installation.

NON-STACKED UNITS

1. The 39M split units will arrive at the jobsite in separate pieces with section to section gasket installed. If the gasket is damaged, obtain the required length of 0.25 in. x 1.50 in. closed cell gasketing locally (i.e., McMaster 8694K94 or Grainger 6YLW0).
2. Refer to unit nameplate (Fig. 1 and 2) for sequence of sections.
3. Set upstream section on roof curb first for outdoor units or on the pad for indoor units.
4. Remove shipping cover. If section has a Single Point Power harness split tags (Fig. 25), verify that the downstream section has split tags for the power plug connectors.

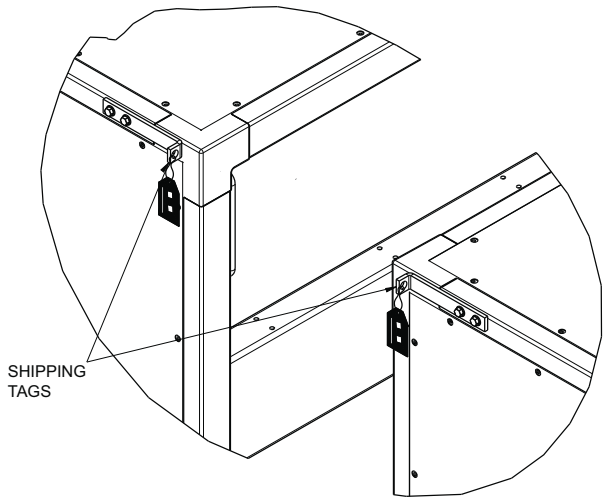

Fig. 25 — Location of Single Point Power Harness Split Tags

5. Find the Power Plug harness and/or Control Plug harness in its position secured for shipment. (Fig. 26).

1. Third-party trademarks and logos are the property of their respective owners.

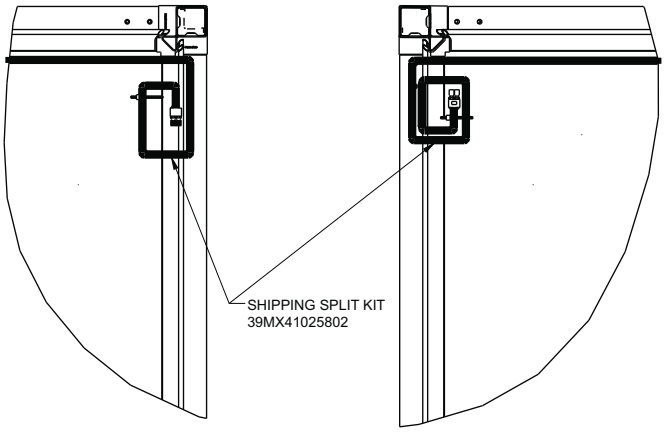

Fig. 26 — Power Harness in Shipped Position at Horizontal Split

6. Verify that the labels on the power plug connectors (Fig. 27) and, if used, the labels on the control plug connectors (Fig. 28) on both sections match.

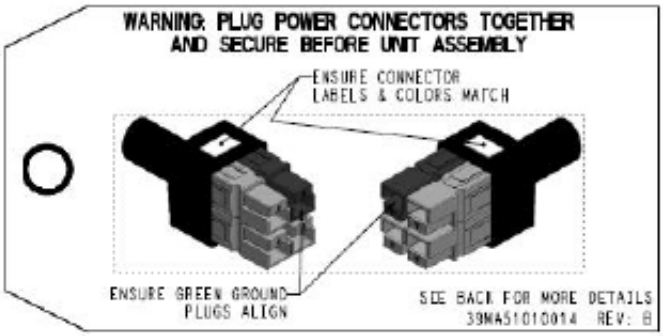

Fig. 27 — Power Plug Connectors Split Tag

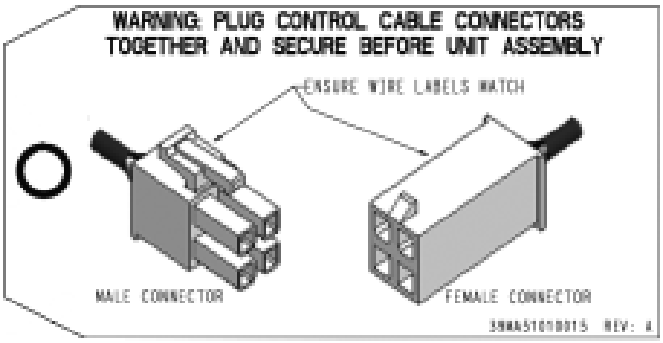

Fig. 28 — Control Plug Connectors Split Tag

7. Place downstream section within 12 in. of the upstream section and detach harness(es) from shipping restraints, connect power poles for each harness as shown in Fig. 29.

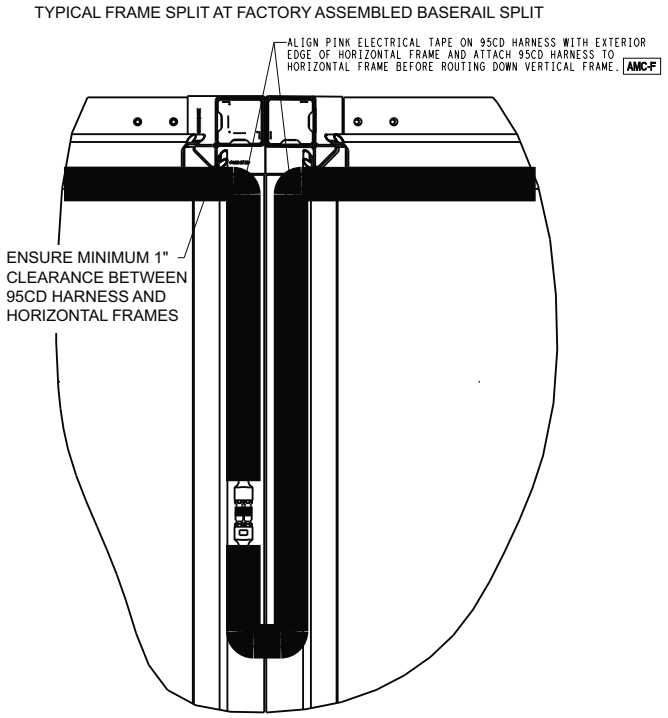

Fig. 29 — Harness After Field Assembly at Horizontal Split

8. Set downstream section on roof curb or pad. Downstream section must be set within 1/2 in. of the upstream section for proper installation.
9. Pull baserails to contact bottom lifting lug connection. Do not fully tighten. See Fig. 30, Detail C.
10. Align top brackets. Start the screw, but do not fully tighten. See Fig. 30, Detail A. For outdoor units, removal of the roof at the split is necessary to access the top brackets.
11. On side of unit, when Intelliclamp connectors are present (sizes 36 and larger only), align Intelliclamp connector, start the screw, but do not fully tighten. See Fig. 30, Detail B.
12. (SIZES 17 AND LARGER ONLY) Remove the roof at the split to access the top Intelliclamp connector(s), align the Intelliclamp connector(s) and start the screw but do not fully tighten.
13. Fully tighten all bolts starting from the base rails and moving to the top. For outdoor units, reinstall all roof sections. Section to section gasket should be compressed to a thickness no larger than 1/8 inch. Apply a bead of caulk at shipping split joints from top of inside roof overhang to roof curb.

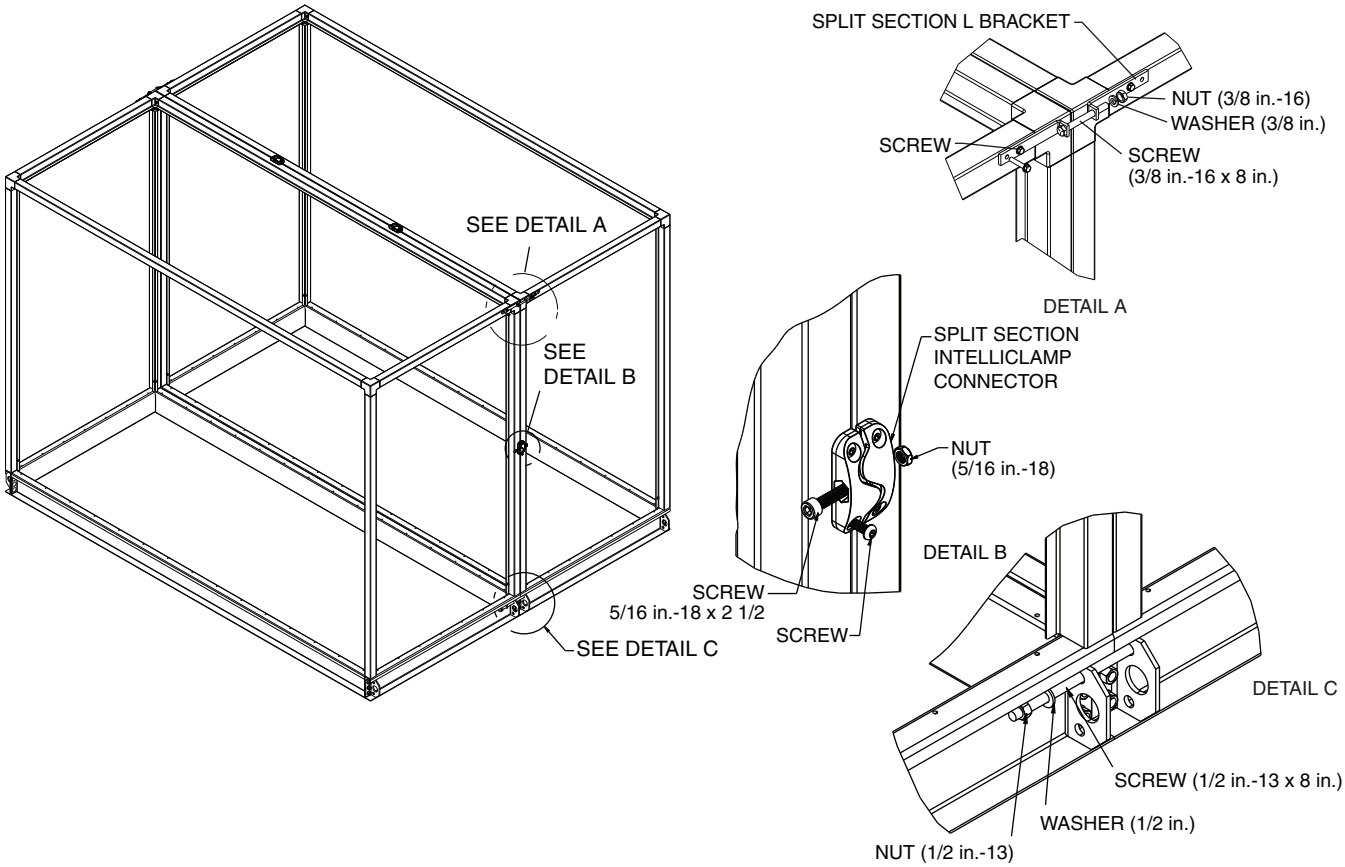

Fig. 30 — Attaching Split Sections — Non-Stacked Units and Lower Level of Stacked Units

14. If CCH (coil connection housing) is installed at a section split:
    a. Use the Intelliclamp connectors on the vertical frames and the split brackets on the top frames to bring the sections together.
    b. Remove the upstream side panels to gain access to the inner surface of the frames.
    c. Use tool clearance holes to install 1/4 in. screws into the downstream frame for the permanent section joint (only necessary on the CCH side). Detail D in Fig. 31 shows the location of the holes; the number of holes will vary by unit.
    d. Reinstall upstream access panel.
    e. Remove the Intelliclamp connectors, the split section L bracket, and the lifting lug under the section that match the CCH side walls and install the CCH as described in Coil Connection Housing section on page 119.
15. Where fan is blow-thru airfoil or forward-curved, install fan discharge diffuser to bulkhead.

⚠ WARNING

Do not attempt to lift unit after assembly! Severe personal injury or death can result.

⚠ CAUTION

Ensure a good seal is created between both sections before continuing. Equipment damage could result.

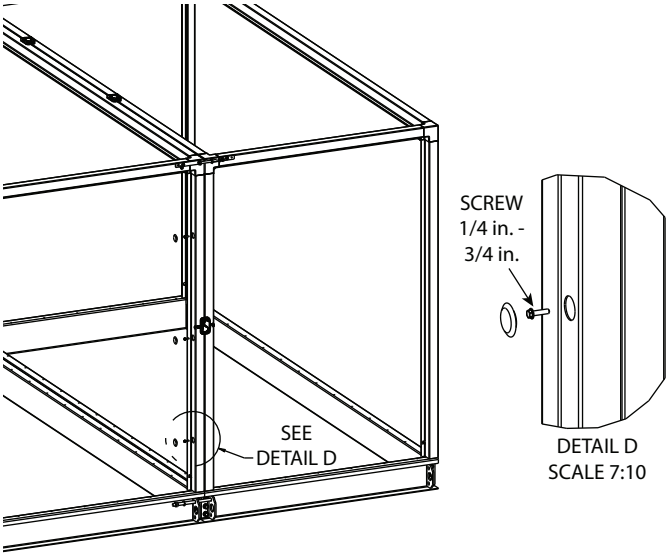

Fig. 31 — Attaching CCH at Section Split — Location of Screw Holes

16. For outdoor units, assemble all roof brackets provided and caulk roof corners as shown in Fig. 32, Detail B. Also caulk (using black or grey polyurethane adhesive sealant such as Black Sikaflex®[1] 221 or Silaprene®[1] SolidSeal) over the field section joint seals from top to bottom on the outside of each field joint to ensure seal integrity.

1. Third-party trademarks and logos are the property of their respective owners.

STACKED UNITS

IMPORTANT: If the top level shipping split arrives separately, do not assemble until you have completed the installation of the lower level shipping splits. This will ease the assembly process.

1. For lower level shipping split, follow Steps 1 through 8 on page 90 for non-stacked units.
2. Refer to Fig. 33. If the split in the lower level section is under the top section, the top horizontal frame of the vertical discharge section will not have the rectangular brackets.
3. Attach the lower level shipping splits from the inside of the bottom vertical discharge section using the AB 1/4 — 3/4 screw as shown in Fig. 33, Detail A. Typically this screw is installed above the coil and under the fan sled, depending on the configuration of the unit.
4. After completing the lower level shipping splits assembly, proceed to the upper level shipping split installation using the provided washers, gasket and self-locking nuts.
5. Fully tighten all bolts starting from the base rails and moving to the top.
6. If unit has single point power, verify that the upper level section has split tags for the power plug connectors.
7. Verify that the labels on the power plug connectors (Fig. 34) and, if used, the labels on the control plug connectors on both sections match.
8. Detach harness(es) from shipping restraints, connect power poles for each harness as shown in Fig. 35.

Duct Connections

Refer to submittal drawing and Fig. 36 and 37 for dimensions.

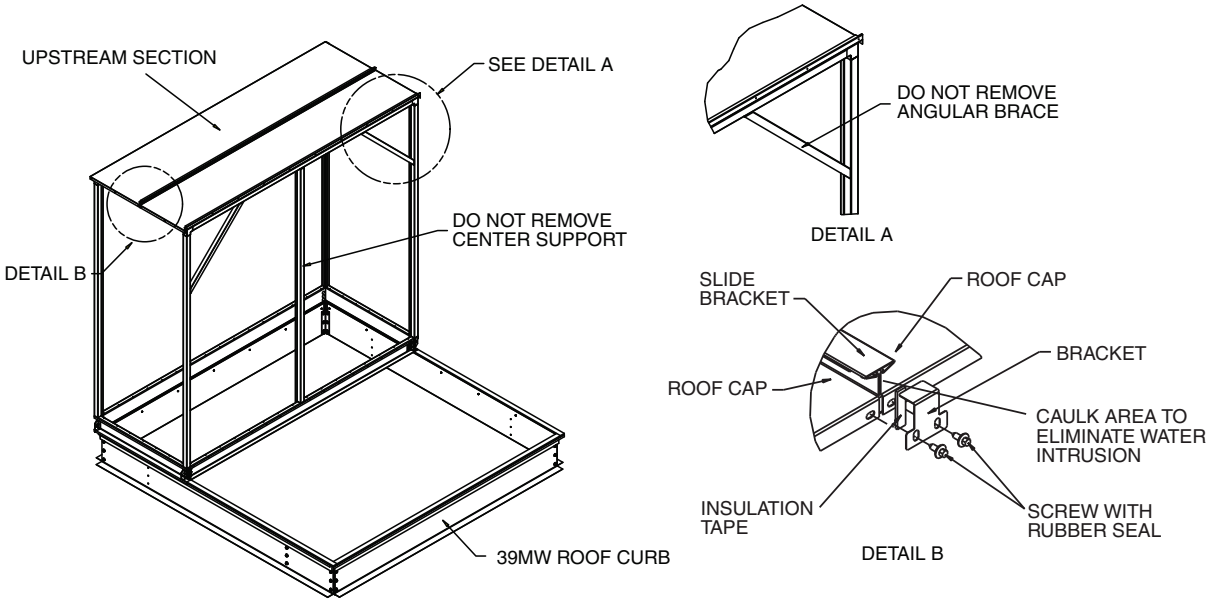

Fig. 32 — 39MW Split Assembly

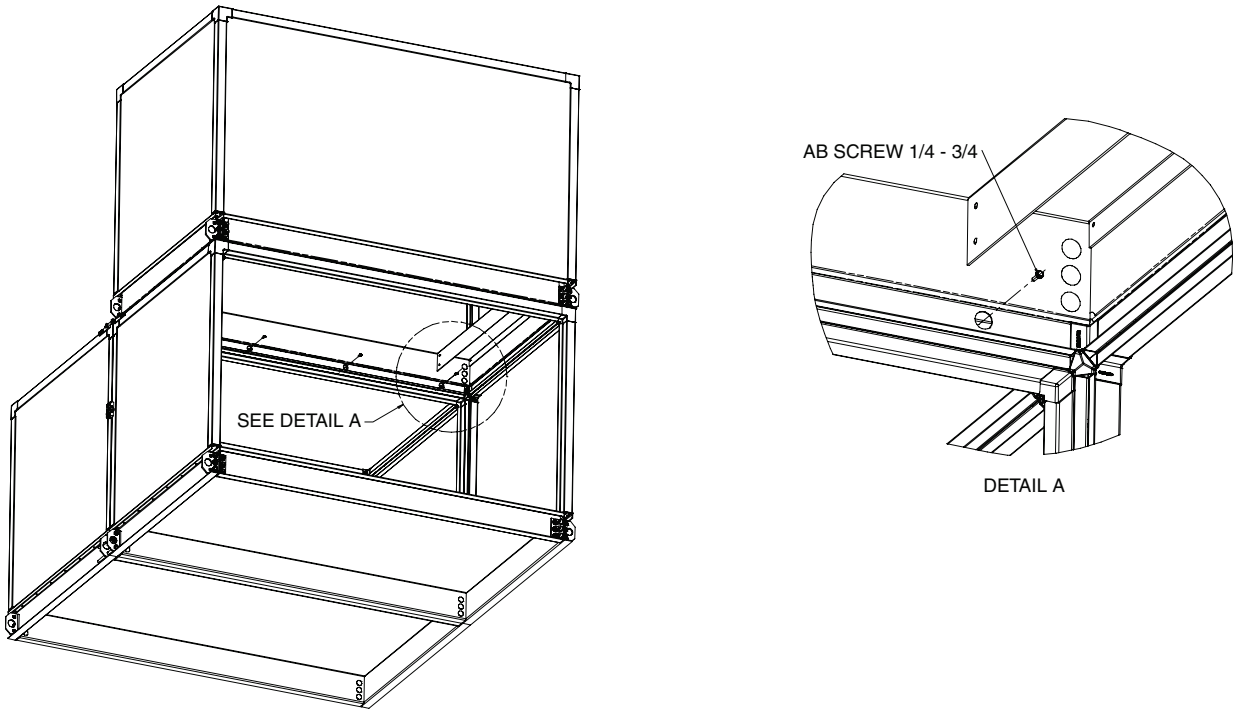

Fig. 33 — Attaching Split Sections — Stacked Units

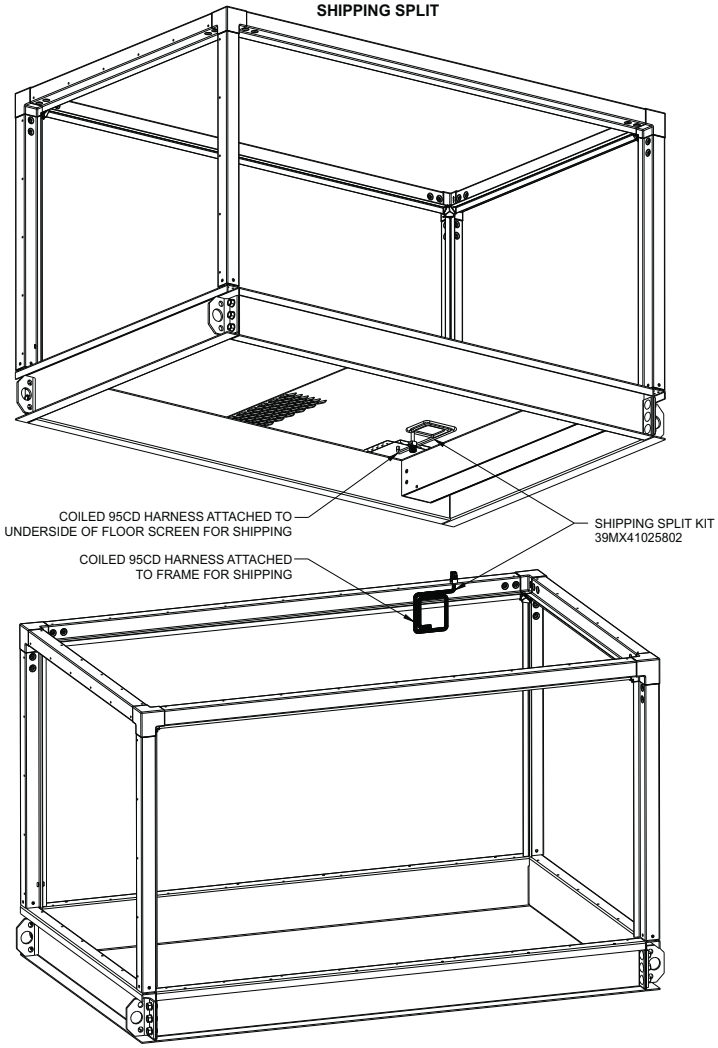

Fig. 34 — Stacked Unit Harness Connection at Vertical Split as Shipped

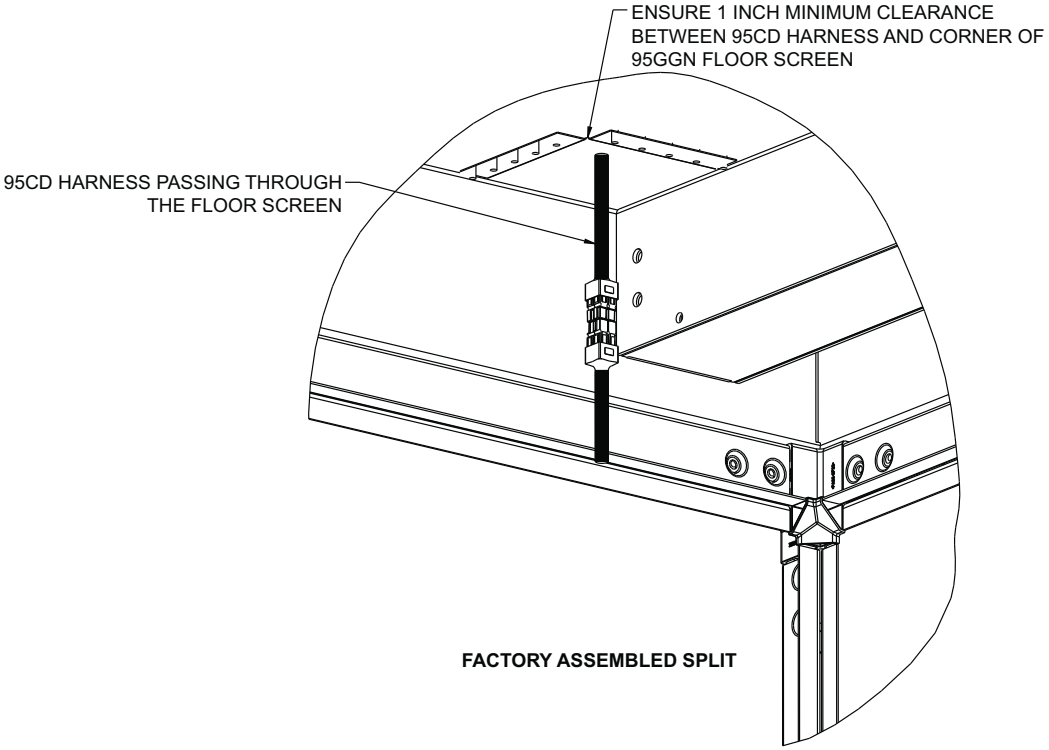

Fig. 35 — Stacked Unit Harness Connection at Vertical Split as Assembled

MIXING BOX, EXHAUST BOX, AND EXTERNAL BYSPASS DAMPER DETAILS

39M UNIT SIZE	DETAIL (SECTIONS)	A (WIDTH)	B (HEIGHT)	JACKSHAFT DIAMETER (In.)
03W	1	25.75	10.75	1/2
06W	1	38.75	14.00	1/2
07T	1	31.75	20.00	1/2
08W	1	46.75	14.00	1/2
09T	1	34.75	20.00	1
10W	1	59.75	14.00	1
11T	1	37.75	26.00	1
12T	1	40.75	26.00	1
12W	1	59.75	14.00	1
14W	2	64.75	16.75	1
16T	1	43.75	26.00	1
17W	2	71.75	16.75	1
18T	1	46.75	26.00	1
21W	2	71.75	20.00	1
22T	2	52.75	32.00	1
25W	2	78.75	20.00	1
25T	2	54.25	38.00	1
30W	2	96.75	20.00	1
30T	2	64.75	38.00	1
35T	2	72.75	38.00	1
36W	3	101.75	29.00	1
37T	2	64.75	38.00	1
40W	3	101.75	32.00	1
42T	2	72.75	44.00	1
50W	3	109.75	35.00	1
51T	2	86.25	44.00	1
58T	2	86.25	44.00	1
61W	3	109.75	44.00	1
72W	3	113.00	46.00	1
85W	3	132.00	46.00	1
96W	3	132.00	52.00	1
110W	4	150.00	52.00	1

SIDE DAMPER DETAILS

39M UNIT SIZE	DETAIL (SECTIONS)	A (WIDTH)	B (HEIGHT)	JACKSHAFT DIAMETER (In.)
03W	1	14	18	1/2
06W	1	20	26	1/2
07T	2	49	14	1
08W	1	20	29	1/2
09T	2	46	20	1
10W	1	26	29	1
11T	2	55	20	1
12T	2	55	20	1
12W	1	26	36	1
14W	1	32	36	1
16T	2	64	20	1
17W	2	32	39	1
18T	2	67	20	1
21W	2	32	49	1
22T	2	73	26	1
25W	2	38	49	1
25T	3	78	26	1
30W	2	44	49	1
30T	3	78	32	1
35T	3	81	38	1
36W	2	50	60	1
37T	3	97	32	1
40W	2	50	66	1
42T	3	96	38	1
50W	2	56	76	1
51T	3	96	38	1
58T	3	109	38	1
61W	3	56	91	1
72W	3	50	102	1
85W	3	58	102	1
96W	3	58	115	1
110W	4	66	115	1

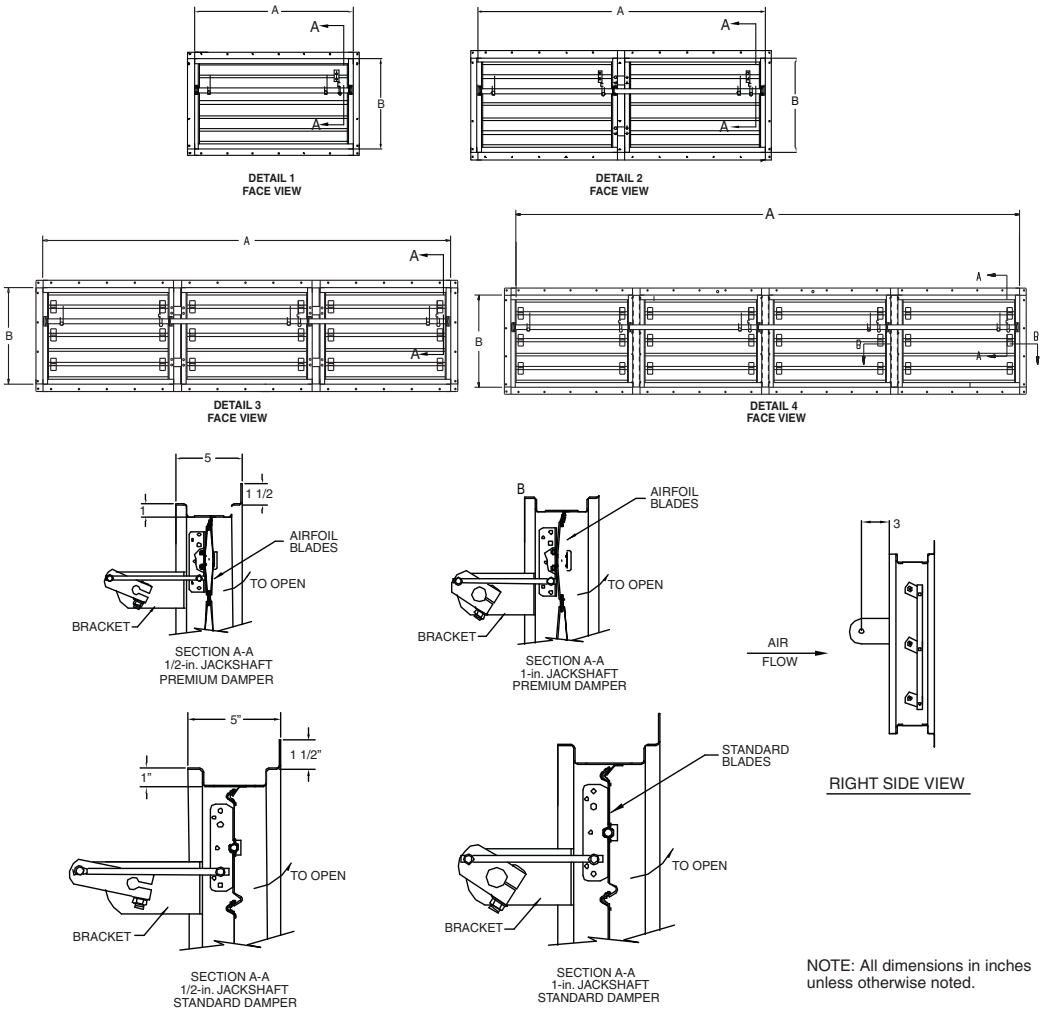

Fig. 36 — Mixing Box, Filter Mixing Box, Exhaust Box and External Bypass Damper Details

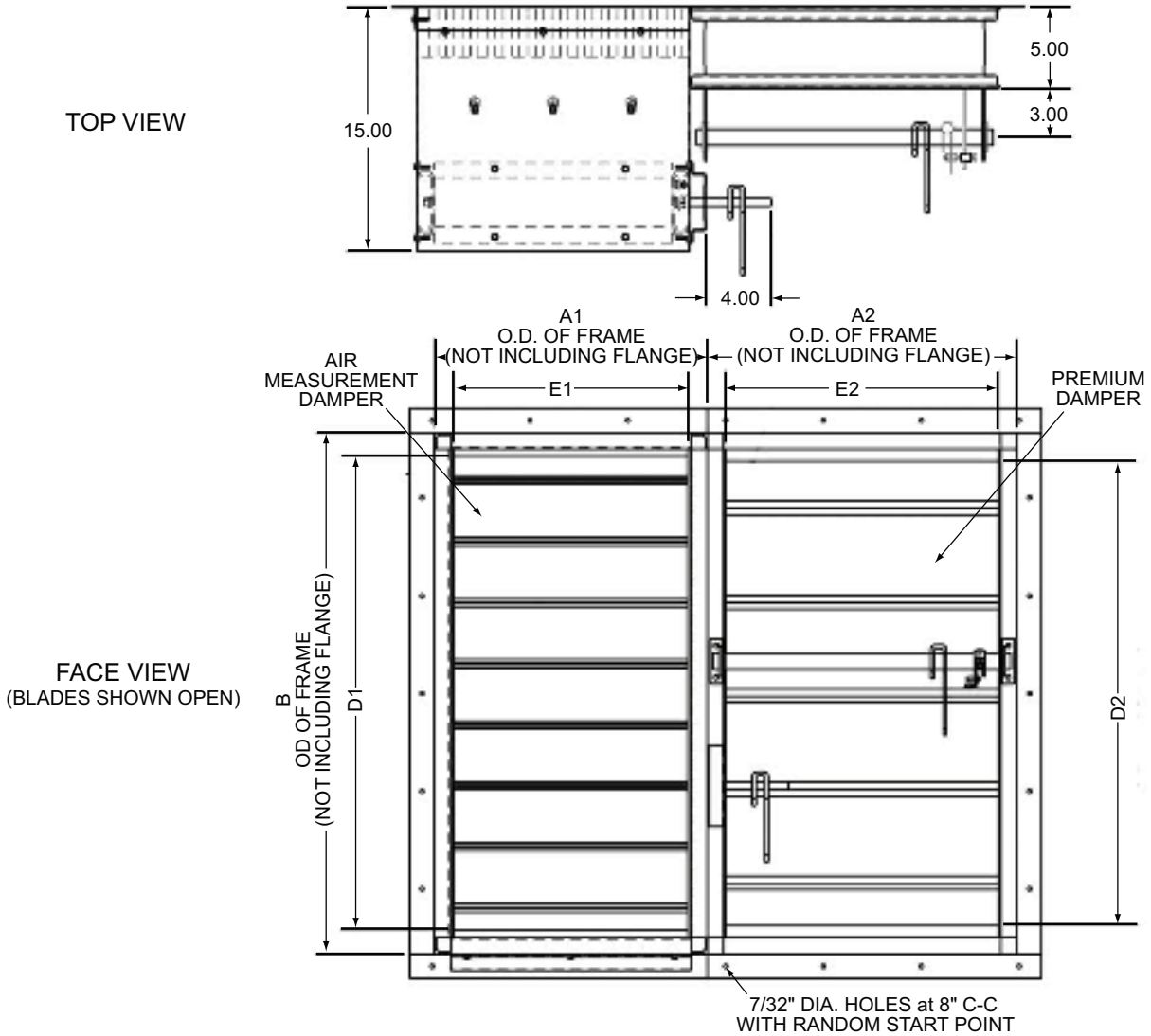

SIZES 03-21

39M UNIT SIZE	DIMENSIONS (in.)							AMS LOW LIMIT (CFM)	AMS HIGH LIMIT (CFM)
	A1	A2	B	D1	D2	E1	E2		
03W	14.00	11.75	10.75	7.17	6.69	11.72	9.50	336	2,100
06W	23.25	15.50	14.00	11.48	10.59	20.97	13.25	836	4,200
07T	19.05	12.70	20.00	17.48	16.59	16.77	10.45	1018	6,107
08W	28.05	18.70	14.00	11.48	10.59	25.77	16.45	1,040	5,600
09T	20.85	13.90	20.00	17.48	16.59	18.57	11.65	1,127	6,763
10W	35.85	23.90	14.00	11.48	10.59	33.57	21.65	1,332	7,000
11T	22.65	15.10	26.00	23.48	22.59	20.37	12.85	1,661	9,964
12T	24.45	16.30	26.00	23.48	22.59	22.17	14.05	1,807	10,845
12W	35.85	23.90	14.00	11.48	10.59	33.57	21.65	1,332	8,400
14W	38.85	25.90	16.75	14.23	13.34	36.57	23.65	1,733	9,800
16T	26.25	17.50	26.00	23.48	22.59	23.97	15.25	1,954	11,725
17W	43.05	28.70	16.75	14.23	13.34	40.77	38.52	1,943	11,900
18T	28.05	18.70	26.00	23.48	22.59	25.77	16.45	2,101	12,606
22T	31.65	21.10	32.00	29.48	28.59	29.37	18.85	3,006	18,038
21W	43.05	28.70	20.00	17.48	16.59	40.77	26.45	2,320	14,700

LEGEND
AMS — Air Measuring Station
NOTE: A1, A2, and B dimensions are actual to O.D. of damper frames not including flanges.

Fig. 37 — AMS Damper Dimensions

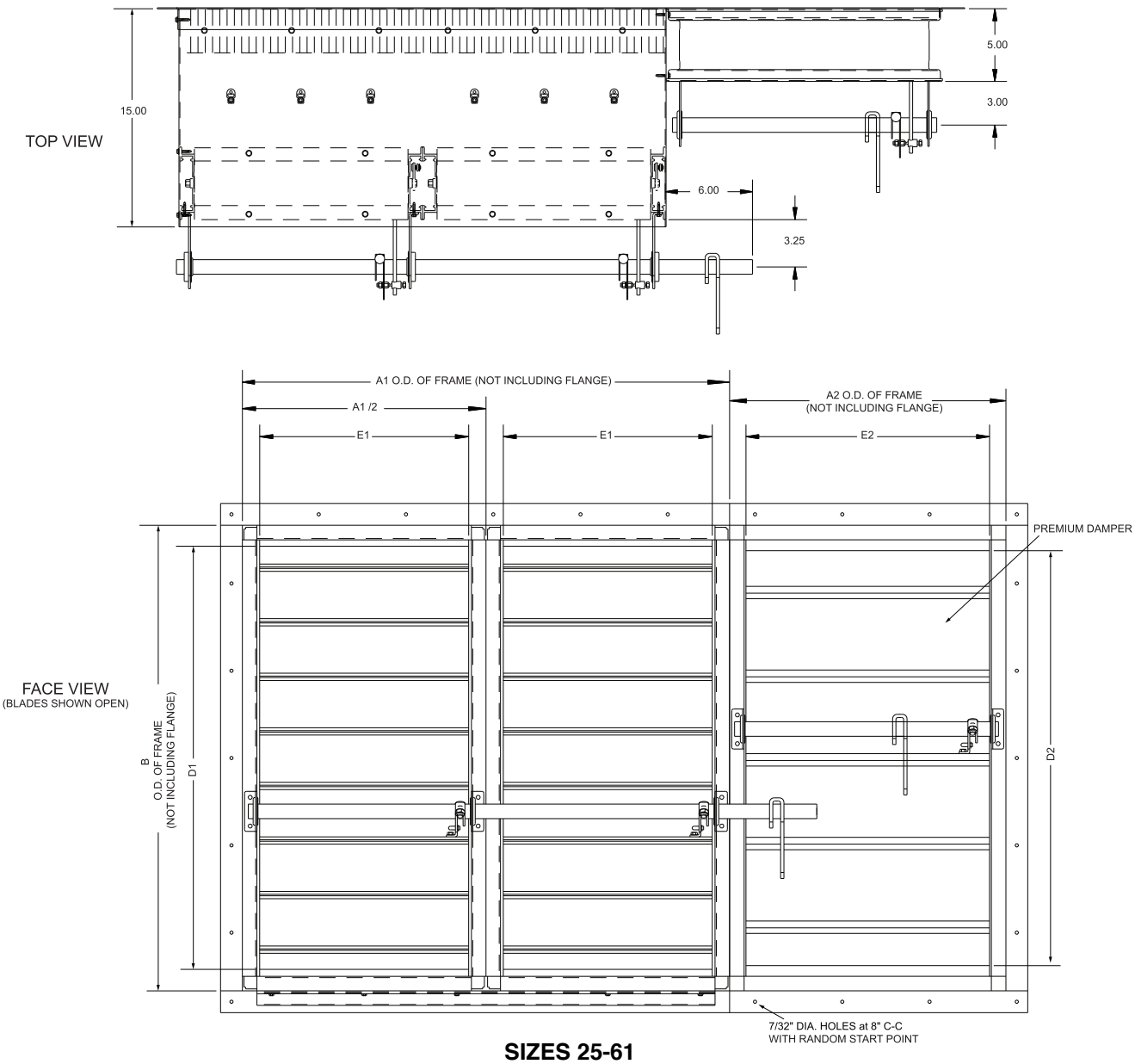

SIZES 25-61

39M UNIT SIZE	DIMENSIONS (in.)							AMS LOW LIMIT (CFM)	AMS HIGH LIMIT (CFM)
	A1	A2	B	D1	D2	E1	E2		
25T	32.55	21.70	38.00	35.48	34.59	30.27	19.45	3729	22,375
25W	47.25	31.50	20.00	17.48	16.59	44.97	29.25	2,570	17,500
30T	38.85	25.90	38.00	35.48	34.59	36.57	23.65	4,505	27,031
30W	58.05	38.70	20.00	17.48	16.59	55.77	36.45	3,153	21,000
35T	43.65	29.10	38.00	35.48	34.59	41.37	26.85	5,097	30,579
36W	61.05	40.70	29.00	26.48	24.47	28.25	38.45	4,814	25,200
37T	38.85	25.90	38.00	35.48	34.59	36.57	23.65	4,505	27,031
40W	61.05	40.70	32.00	29.48	28.59	28.25	38.45	5,312	28,000
42T	43.65	29.10	44.00	41.48	40.59	41.37	26.85	5,958	35,751
50W	65.85	43.90	35.00	32.48	31.59	30.65	41.65	6,369	35,000
51T	51.75	34.50	44.00	41.48	40.59	49.47	32.25	7,125	42,750
58T	51.75	34.50	44.00	41.48	40.59	49.47	32.25	7,125	42,750
61W	65.85	43.90	44.00	41.48	40.59	30.65	41.65	8,006	42,700

LEGEND
AMS — Air Measuring Station
NOTE: A1, A2, and B dimensions are actual to O.D. of damper frames not including flanges.

Fig. 37 — AMS Damper Dimensions (cont)

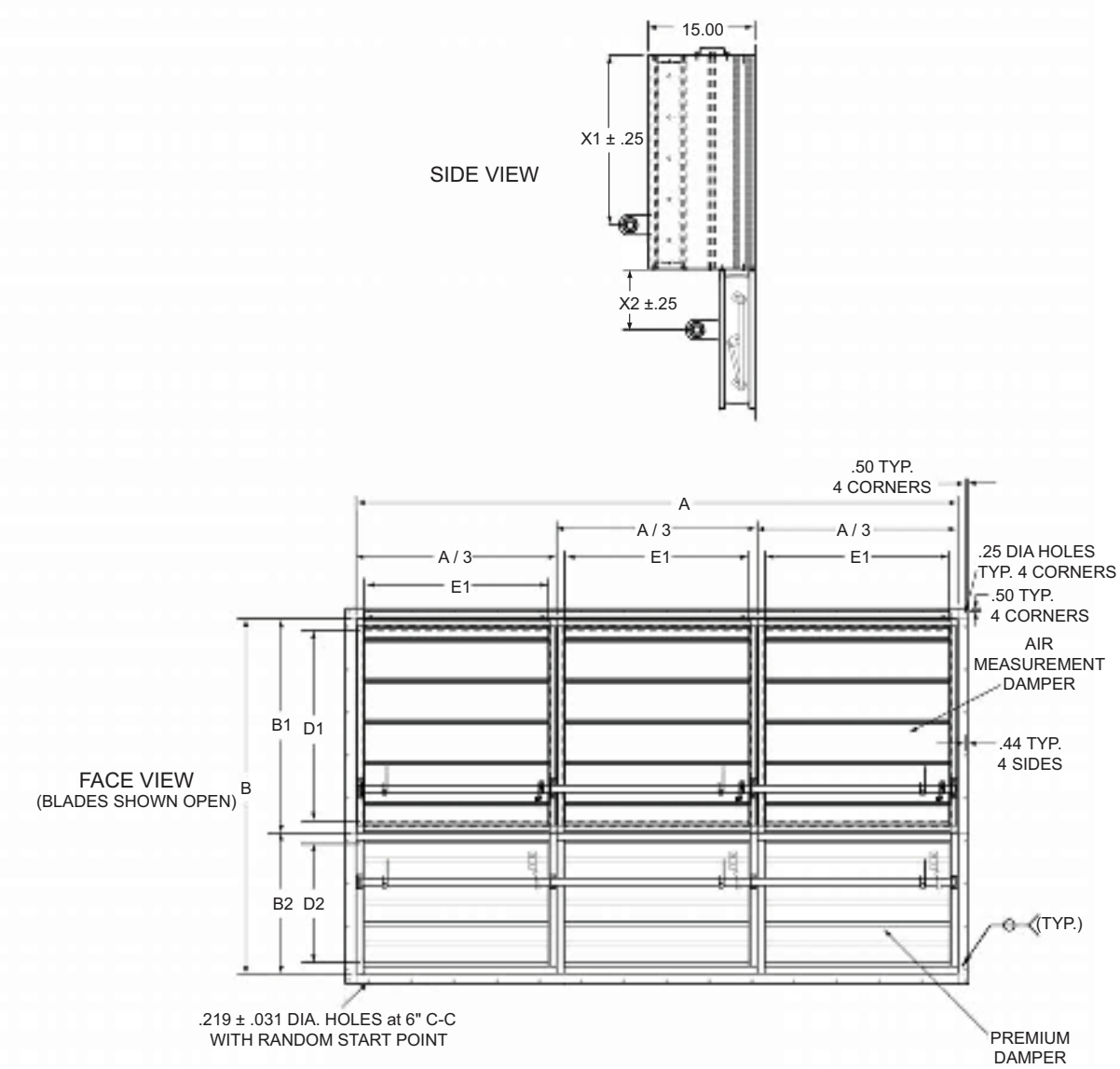

SIZES 72-110

39M UNIT SIZE	DIMENSIONS (in.)										AMS LOW LIMIT (CFM)	AMS HIGH LIMIT (CFM)
	A	B	A/3	B1	B2	X1	X2	D1	D2	E1		
72W	113.00	46.00	37.60	27.60	18.40	11.74	11.96	24.60	15.02	35.42	6,115	40,768
85W	132.00	46.00	44.00	27.60	18.40	11.74	11.96	24.60	15.02	41.71	7,208	48,052
96W	132.00	52.00	44.00	31.20	20.80	13.52	14.36	28.20	16.85	41.71	8,148	54,319
110W	150.00	52.00	50.00	31.20	20.80	13.52	14.36	28.20	16.85	47.72	9,174	61,159

LEGEND
AMS — Air Measuring Station
NOTE: A and B dimensions are actual to O.D. of damper frames not including flanges.

Fig. 37 — AMS Damper Dimensions (cont)

MIXING BOX/INLET PLENUM/DISCHARGE PLENUM/ EXTERNAL BYPASS/RETURN FAN

Attach the ductwork to the box frame rails with sheet metal screws as shown in Fig. 38. Ductwork should be flanged out as close to the damper framed opening as possible. Screws with weatherproof washers and a bead of silicone around the duct flange must be used for outdoor applications. Do not remove the screws retaining the damper frame; the damper will fall out.

MIXING BOX/INLET PLENUM/DISCHARGE PLENUM (BOTTOM)

IMPORTANT: For all sizes with bottom full openings, attach ductwork to inside of baserails.

Refer to Fig. 39 for bottom opening ductwork connection.

HOUSED FAN DISCHARGE CONNECTIONS (NOT PLENUM FANS)

Discharge air ducts must be attached directly to the discharge side of the unit. This applies to both indoor and outdoor units.

For end or top discharge, apply 1/2 in. thick by 1-1/2 in. wide closed cell neoprene gasketing or run a bead of silicone around the fan discharge. Flange the ductwork out no more than 1-1/4 in. and screw the flanged ductwork to the fan discharge.

For bottom discharge supply fan duct connections, connect a short stub duct directly to the bottom of the unit. For smaller size openings, gasket the discharge, flange the ductwork out no more than 1-1/4 in., and screw the flanged ductwork to the fan discharge. For larger size units, build a short stub of ductwork with no flange, slip it up between the framed opening, and screw the duct to the frame members from the inside of the stub duct. See Fig. 40.

Use care when making turns and transitions in ductwork to avoid excessive air friction. Duct elbows should contain turning vanes. See Fig. 41.

Ductwork connected to the fan discharge should run in a straight line for at least 2.5 times the outlet diameter dimensions and should not be reduced in cross-section. See Fig. 42. Duct turns should be in the same direction as fan rotation to minimize any negative system effects.

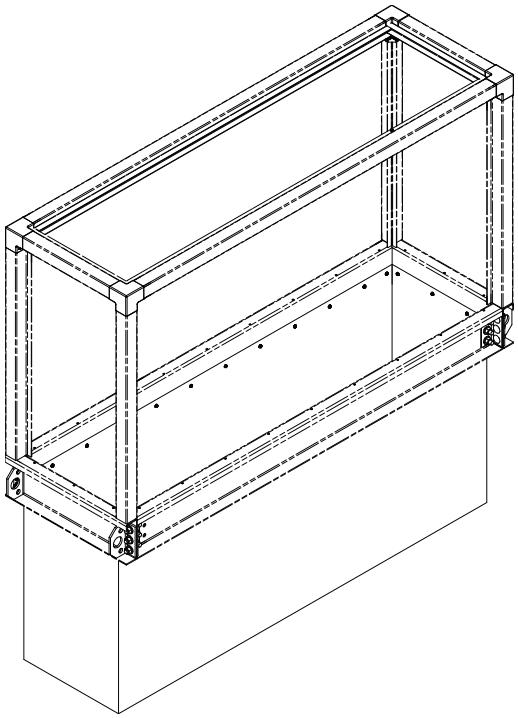

Fig. 39 — Duct Connections — Full Open Bottom (Except Housed Fans)

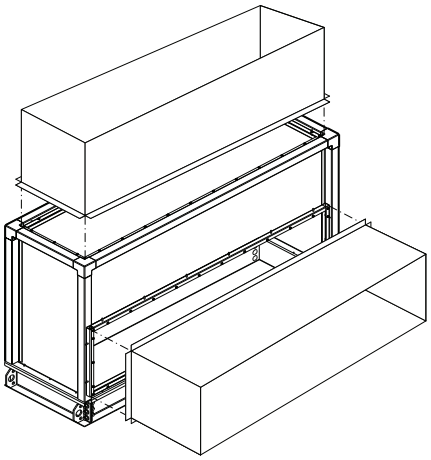

Fig. 38 — Duct Connections — Mixing Box Ductwork Attachment

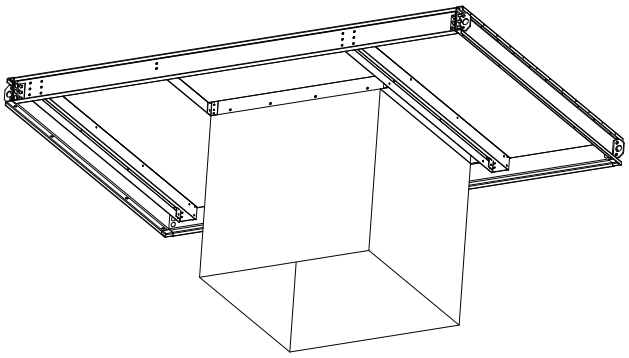

Fig. 40 — Bottom Duct Connection — Housed Fans

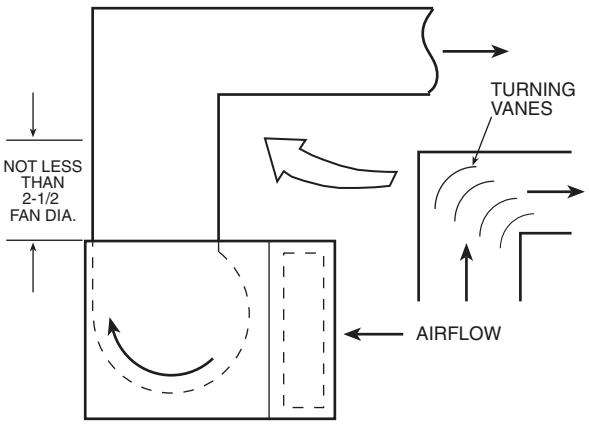

NOTE: Make turns in the same direction as fan rotation.

Fig. 41 — Recommended Discharge Duct Arrangement When Turns are Required

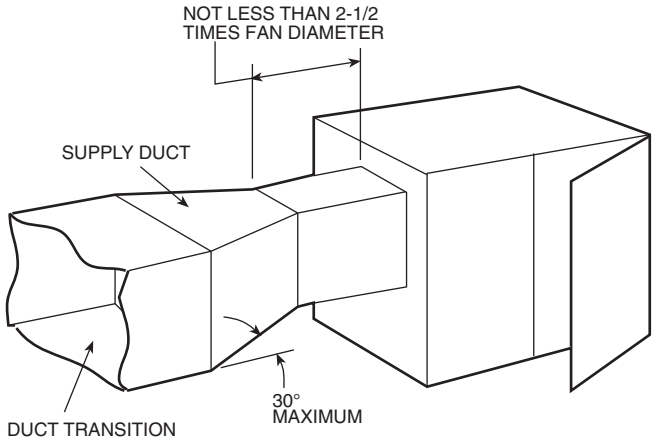

Fig. 42 — Duct Connections

BOTTOM RETURN FAN CONNECTIONS

IMPORTANT: For all sizes with full bottom return openings, attach ductwork to inside of baserails.

Return air ducts must be attached directly to the return side of the unit. This applies to both indoor and outdoor units! Use care when making turns and transitions in ductwork to avoid excessive air friction. Duct elbows should contain turning vanes. See Fig. 41.

PLENUM FAN DUCT CONNECTIONS

Plenum fans are designed for draw-thru or blow-thru operation. Draw-thru fan sections have closed panels on all sides except for the fan inlet side. On blow-thru fan sections, the panel on the end opposite the inlet is omitted so that components such as coil or filter sections can be added downstream from the plenum fan.

NOTE: Duct openings cannot be cut into the bottom of any plenum fan section. An additional discharge plenum MUST be used for bottom duct opening.

DRAW-THRU PLENUM FAN DISCHARGE FABRICATION

Discharge openings are not allowed through the floor of plenum fan sections. A separate discharge plenum is the only approved method for bottom duct connections when using a plenum fan. Duct openings for draw-thru plenum fans must be field fabricated. They should be located in the plenum fan section according to the following guidelines:

- Locate discharge openings in side or top panels; the end panel opposite the inlet will have a higher pressure drop per the explanation in the 39M Product Data manual.
- Locate discharge openings on the side or top panels between the fan wheel and end panel opposite the inlet. Do not locate discharges in the direct path of airflow from the wheel.
- Avoid locating the discharge opening on the motor side of the fan section. If a discharge on the motor side is necessary, locate the opening near the top of the cabinet.
- Sizes 36-110 include intermediate frame members. When cutting the discharge opening for the plenum fan, do not cut through any intermediate frame member.

Typical duct locations are shown in Fig. 43.

Once the discharge locations are selected and cut, the duct connections can be fabricated. Install field-supplied duct flanges and framing channels to smooth the airflow leaving the discharge opening. Two of the channels should extend the width or height of the cabinet to provide additional cabinet support.

Panel Cutting

The 39M unit's double-wall foam-filled panels require special attention when cutting and/or penetrating.

1. Take care in planning before penetrating any panel with electrical conduit, hydronic piping, sensor pickups or wiring. Once these are routed through a panel, for all practical purposes, it becomes a fixed panel that is not easily removed for service access.
2. In some cases it will be possible for smaller conduits (1/2-in. or 3/4-in.) to enter the cabinet through the frame rail where individual sections are joined together. Inspect the selected area carefully to be certain that you do not encounter shipping blocks or section joining screws. Once the conduit is in place, it must be securely sealed, watertight and airtight, to prevent ANY infiltration.

   Penetrations are typically located in one of the existing "fixed" panels, such as the fan discharge panel or the coil connection panel, to maximize the number of removable/service panels. When it is necessary to penetrate the panel for wiring or piping entry, make certain that the entry point will not interfere with future component servicing, block access doors, or obstruct airflow.
3. Drill a small pilot hole completely through the panel.
4. Use of a sharp hole saw or, if appropriate, a powered shear cutting tool or sheet metal nibbler to cut the hole or opening from each side.

⚠ CAUTION

Do not use a cutting torch or open flame on or near the fan. Damage to the panel may occur.

5. Carefully remove the foam. The hole should be lined or sleeved to confine the foam, and the penetration should be sealed, both inside and out, to eliminate all possibility of infiltration or leakage.

NOTE: Small quantities of locally available commercial canned foam may be used, if necessary, to complete minor repairs. Significant patching may justify ordering replacement panels instead.

Face and Bypass Dampers

All face and bypass damper sections are shipped fully assembled. Unit sizes 03-12 are built with a single damper assembly. Sizes 14-110 have multiple damper assemblies linked via a jackshaft: two assemblies for sizes 14-61; three for sizes 72-96; and four for size 110. Damper crankarms have 90 degrees of travel from fully open to fully closed positions and are adjustable to suit conditions. Refer to Fig. 44 for details.

Actuators must be mounted directly to the damper shaft. Removal of crankarms is necessary for direct connection actuator use. Refer to Table 24 for linkage configurations. Refer to Table 25 for operating torque requirements.

Table 24 — Linkage Configurations

LINKAGE CONFIGURATION	
TOP-BOTTOM	1 Actuator
TOP-REAR	
TOP-FACE*	
REAR-BOTTOM	
SIDE-REAR	
NO-LINKAGE CONFIGURATION	
SIDE-BOTTOM	1 Actuator Per Damper
Side-Top	

* Sizes 50-110 use one actuator per damper.

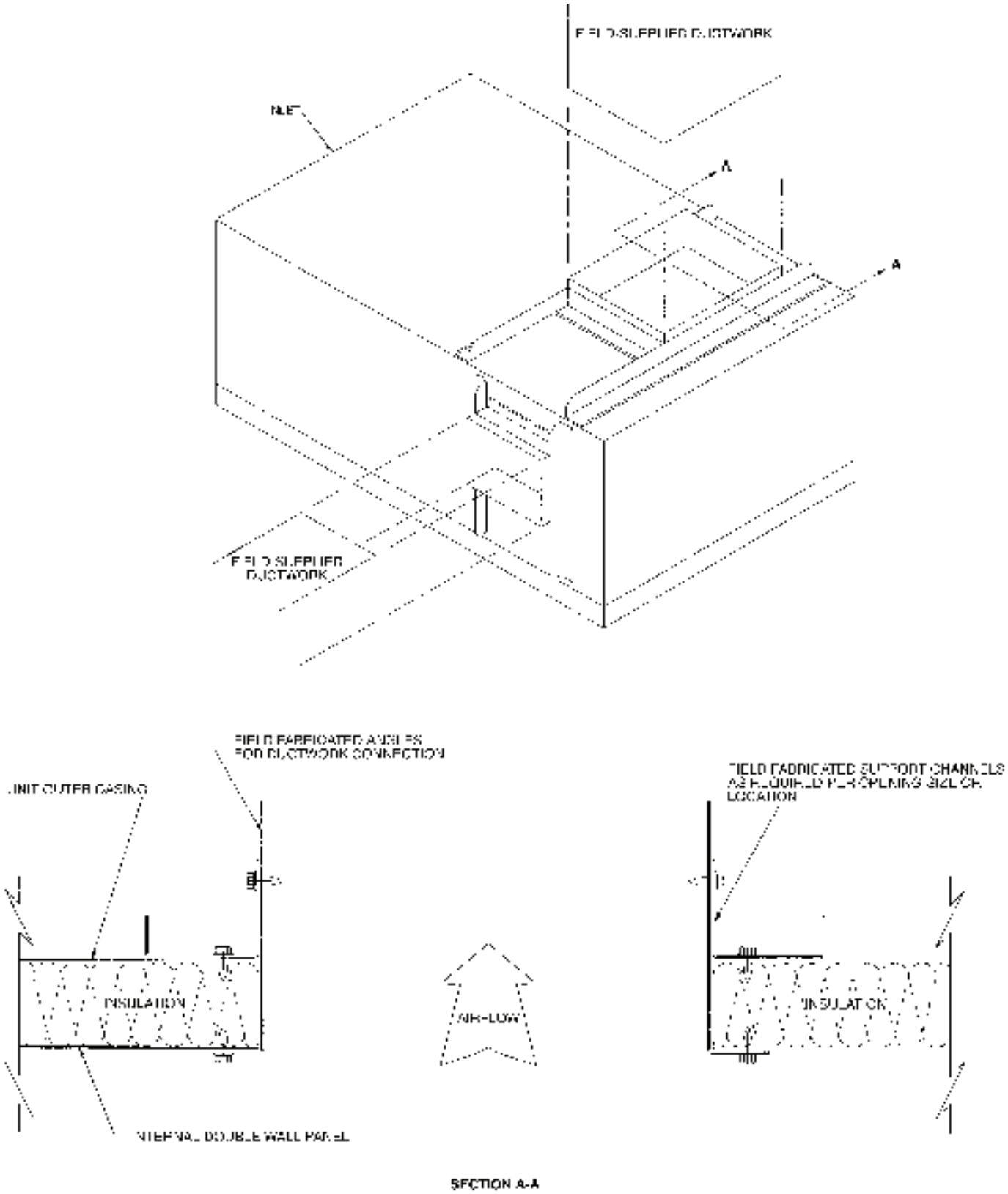

Fig. 43 — Discharge Fabrication, Draw-Thru Plenum Fans

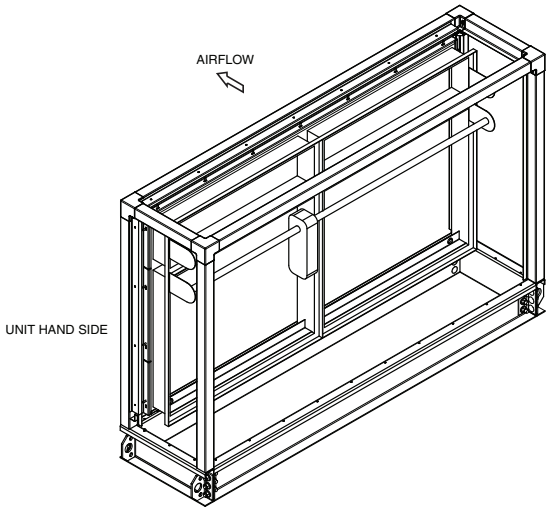

FACE AND BYPASS DAMPER DETAILS

39M UNIT SIZE	DIMENSION (IN.)		
	A	BT	D
03W	26.37	26.37	5.69
06W	39.37	26.37	5.69
07T	32.37	39.26	9.21
08W	47.37	29.37	6.09
09T	35.37	46.26	11.26
10W	60.37	29.37	6.09
11T	38.37	55.26	11.48
12T	41.37	55.26	11.48
12W	60.37	36.37	5.69
14W	65.37	36.37	5.69
16T	44.37	64.26	18.16
17W	72.37	39.37	6.19
18T	47.37	67.26	22.37
22T	53.37	73.26	25.25
21W	73.37	49.37	8.69
25T	54.87	78.26	24.38

39M UNIT SIZE	DIMENSION (IN.)		
	A	BT	D
25W	79.37	49.37	8.69
30T	65.37	78.26	22.61
30W	97.37	49.37	8.69
35T	73.37	81.26	22.61
36W	102.37	60.37	13.69
37T	65.37	97.26	27.68
40W	102.37	66.37	11.62
42T	73.37	96.26	26.68
50W	110.37	76.37	21.31
51T	86.87	96.26	26.86
58T	86.87	109.26	33.54
61W	110.37	91.37	26.14
72W	113.46	103.13	30.08
85W	132.46	103.13	30.08
96W	132.46	116.13	35.92
110W	150.46	116.13	35.92

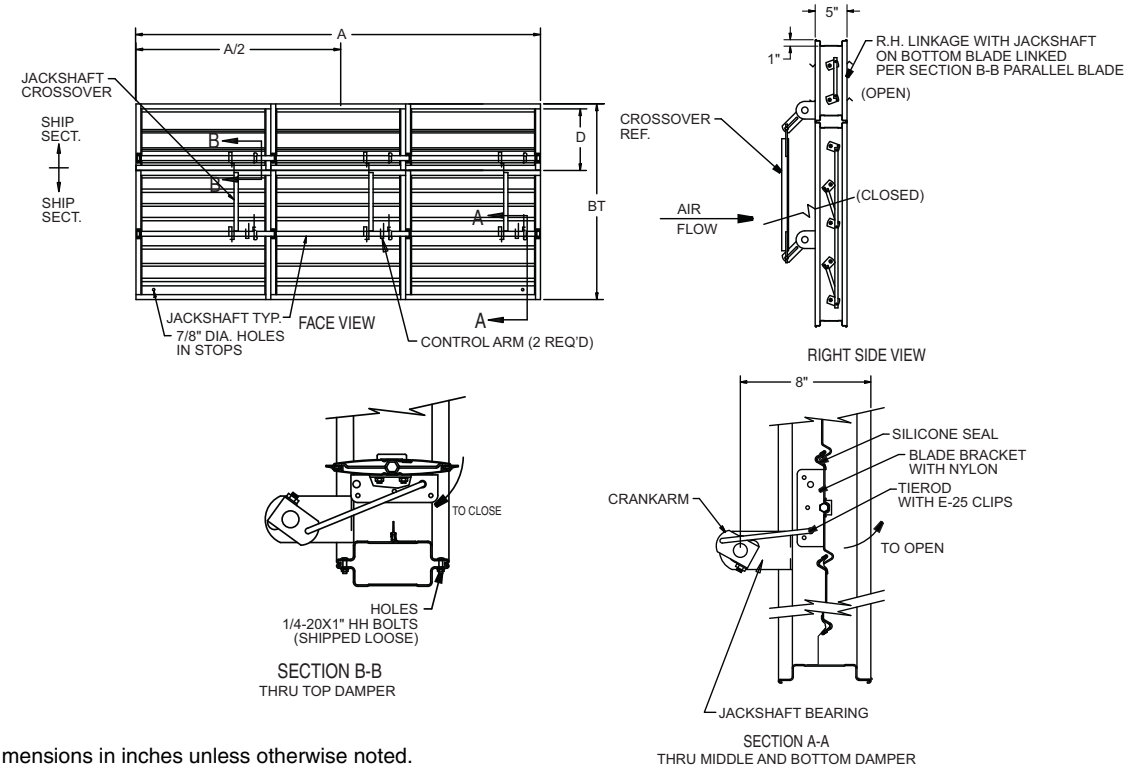

NOTE: All dimensions in inches unless otherwise noted.

Fig. 44 — Face and Bypass Section Detail

Table 25 — Damper Operating Torque (in.-lb)

COMPONENT	39M UNIT SIZE															
	03W	06W	07T	08W	09T	10W	11T	12T	12W	14W	16T	17W	18T	21W	22T	25W
Zone Damper	N/A	12	N/A	12	N/A	12	N/A	N/A	12	12	N/A	12	N/A	12	N/A	12
Mixing or Exhaust Box	13	26	31	32	34	41	48	52	41	53	55	58	59	70	82	77
Side Mixing or Exhaust Box	13	26	33	29	45	37	54	54	46	56	63	61	66	77	93	91
CD60 / Airflow Measuring Damper	5/8	8/16	9/19	10/20	10/21	12/25	14/29	15/31	12/25	21/32	14/34	17/36	17/36	20/42	24/50	20/46
Integral and Internal Face and Bypass	NA/38	150/38	150/62	150/100	150/80	150/140	150/103	150/111	150/170	150/175	150/139	150/175	150/155	150/175	150/190	150/175
External Face and Bypass	38/14	38/26	N/A	80/32	N/A	120/41	N/A	N/A	150/41	160/54	N/A	180/60	N/A	180/70	N/A	180/77

COMPONENT	39M UNIT SIZE															
	25T	30W	30T	35T	36W	37T	40W	42T	50W	51T	58T	61W	72W	85W	96W	110W
Zone Damper	N/A	12	N/A	N/A	18	N/A	18	N/A	18	N/A	N/A	18	N/A	N/A	N/A	N/A
Mixing or Exhaust Box	100	94	120	135	143	120	158	134	187	184	184	235	187	226	226	381
Side Mixing or Exhaust Box	99	105	122	150	146	151	161	178	207	178	202	248	248	278	325	369
CD60 / Airflow Measuring Damper	29/62	27/57	35/72	39/81	41/87	35/72	46/95	45/94	54/112	53/111	53/111	68/141	73/152	84/177	96/201	109/228
Integral and Internal Face and Bypass	150/209	150/175	150/249	150/290	150/195	150/309	150/232	300/343	300/251	300/407	300/461	300/304	300/486	300/572	360/634	360/712
External Face and Bypass	N/A	180/95	N/A	N/A	203/129	N/A	224/128	N/A	280/170	N/A	N/A	338/253	546/253	639/295	721/334	819/379

NOTES:
1. Damper shaft moves 90 degrees from open to close.
2. Operating torques are shown for one damper. Multiply the value shown by the number of dampers for total with one actuator.

Zone Damper Section

Refer to Fig. 45 and install the section as follows:

1. Remove the screws holding the zone damper section to the heating coil section and remove the lag screws holding the damper to the shipping skid.
2. Place the supplied 1/4-in. thick x 1-1/2-in. grey foam gasket around the perimeter of the cooling and heating coil section discharges. Use two gasket strips on partition panels to obtain double width.
3. Rig the zone damper section and lift it into position on (vertical discharge) or next to (horizontal discharge) the gasketed cooling and heating coil sections.
4. Fasten the damper section to the coil sections using the supplied 1/4-14 x 3/4-in. sheet metal screws.
5. Install control shaft and bearing for each individual zone after cutting linkage (for the job specific zone application).

   Control shaft extensions are bagged and wrapped to the inside of the zone damper blades. Additional field-supplied shaft extensions may be ordered from local Ruskin supplier, part no. 10-020569-00B.
6. Zones should be split for equal airflow through each damper.

⚠ CAUTION

Factory duct collars and damper assemblies are for attaching ductwork only and must NOT be used to support the duct's weight. Weight bearing deflection can increase torque necessary to operated dampers, or bind them preventing any movement.

ZONE DAMPER LINKAGE

Note that damper control levers and a common operating bar are factory installed on upper end of damper shafts on top of zoning damper assembly. See Fig. 45 and 46. To facilitate the installation of field-supplied damper operators, the operating bar may be cut and the control levers repositioned as follows:

⚠ CAUTION

Damper operation may be impaired if ductwork is supported by the unit.

1. Check job prints to determine number and size of zones required and damper operator locations.
2. Cut and remove portion of operating bar between zones as required.
3. Install actuators on field-fabricated support brackets. Connect actuator linkage to the center axle of interconnecting zones.

4. Adjust actuator for correct damper operation. Be sure actuator, linkage, and dampers operate freely. See Table 25 for operating torque requirements.

Mixing Box/Filter Mixing Box Damper Linkage

⚠ CAUTION

It is important to properly link the outdoor-air and return-air dampers. Failure to do so may cause mixing problems, stratification, or coil freezing under some conditions, especially in combination type filter mixing boxes.

Refer to Fig. 47 for typical damper arrangement and connecting rod position.

CONTROL DAMPERS

Control dampers may be operated with pneumatic or electric actuators. These items should be set up in accordance with the control manufacturer's installation instructions.

DAMPER LINKAGE ADJUSTMENT

After the air-handling unit has been powered, the dampers should be checked to ensure they move freely and close tightly. Adjustment of the linkage may be required.

LINKAGE ADJUSTMENT

1. With the damper actuator unpowered and the damper linkage disconnected, rotate the outdoor-air damper so that it is fully closed. Make sure the spring return actuator has completed its stroke (with power disconnected this will be achieved). The return-air damper should be fully open at this point.
2. Tighten the actuator on the damper jackshaft, ensure all linkage is connected, secure and moves freely.
3. With power applied to the actuator, check for a complete stroke and free movement in dampers and damper linkage.

⚠ CAUTION

Dampers and linkage must be checked prior to applying power. Make certain that there are no obstructions that could interfere with the operation of the dampers, or equipment damage could result.

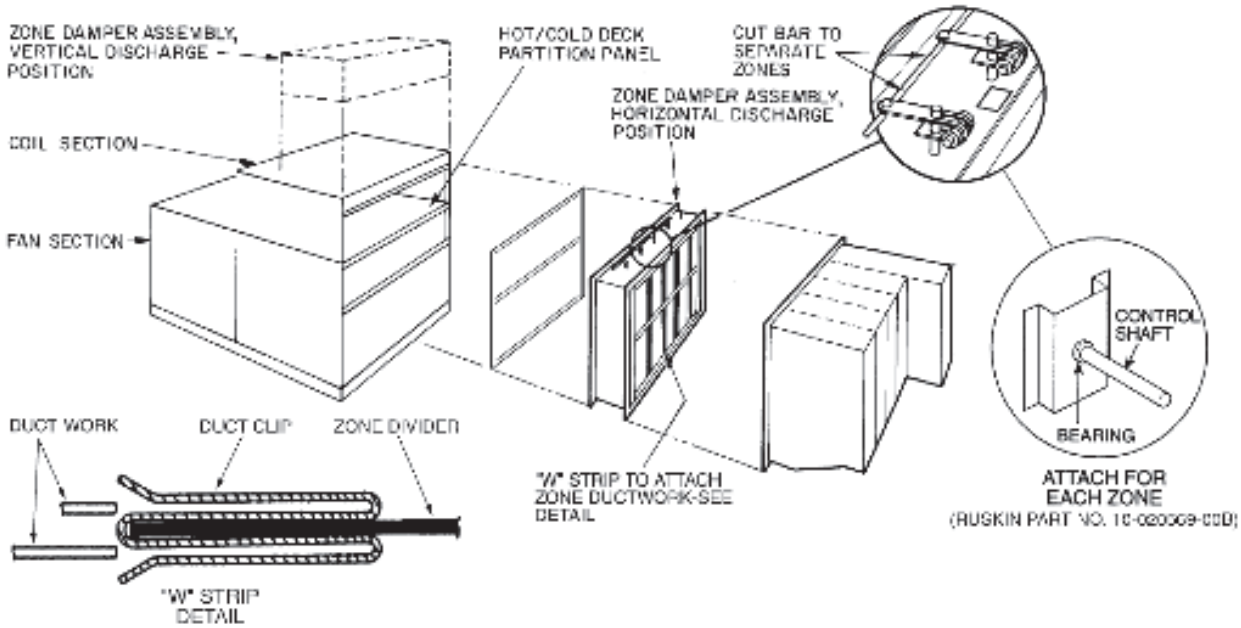

Fig. 45 — Zone Damper Assembly Details (Horizontal Discharge Shown)

ZONE DAMPER DETAILS

39M UNIT SIZE	DIMENSIONS (in.)			QTY OF ZONES	QTY OF EXTENSION SHAFT KITS
	A	B	C		
06W	28.50	41.50	12	6	4
08W	28.50	49.50	12	7	4
10W	28.50	62.50	12	10	6
12W	34.50	62.50	15	10	6
14W	34.50	67.50	15	10	6
17W	34.50	74.50	15	12	7
21W	40.50	74.50	18	12	7
25W	40.50	81.50	18	13	8
30W	40.50	99.50	18	16	10
36W	52.50	104.50	24	17	10
40W	52.50	104.50	24	17	10
50W	56.50	112.50	26	18	12
61W	68.50	112.50	32	18	12

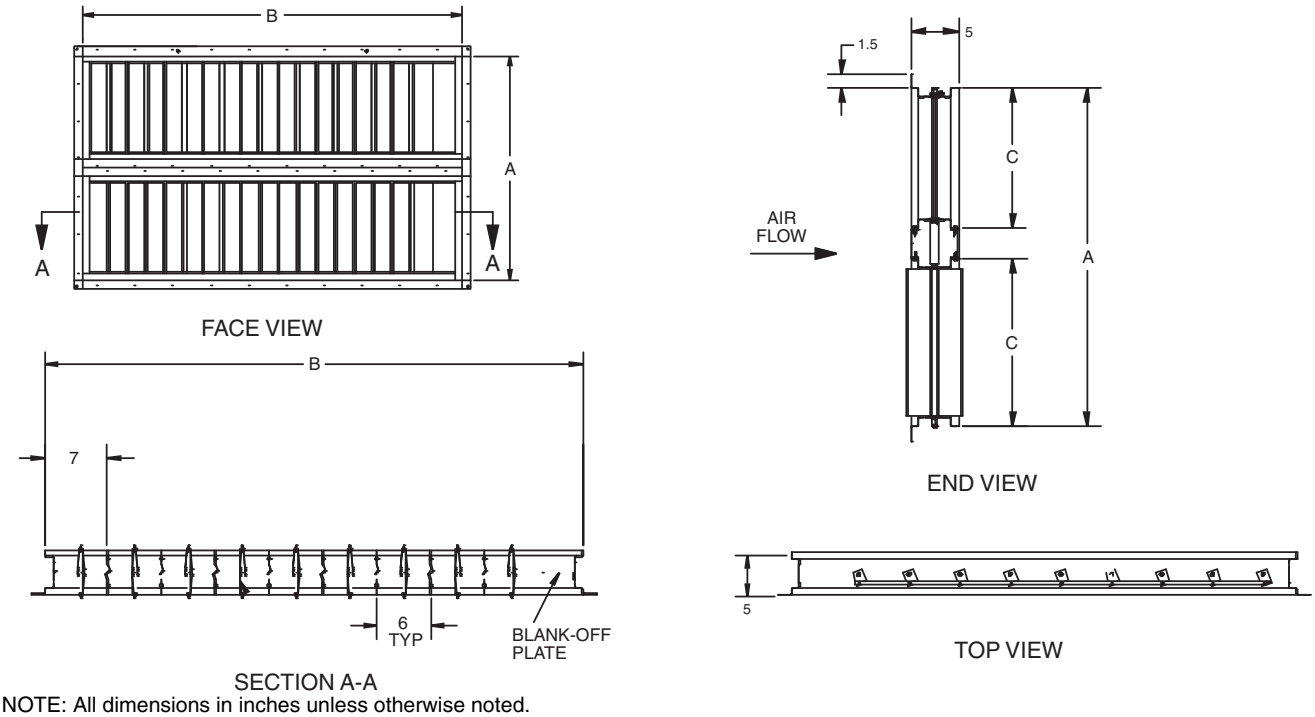

NOTE: All dimensions in inches unless otherwise noted.

Fig. 46 — 39M06-61 Unit Zone Damper Section Details

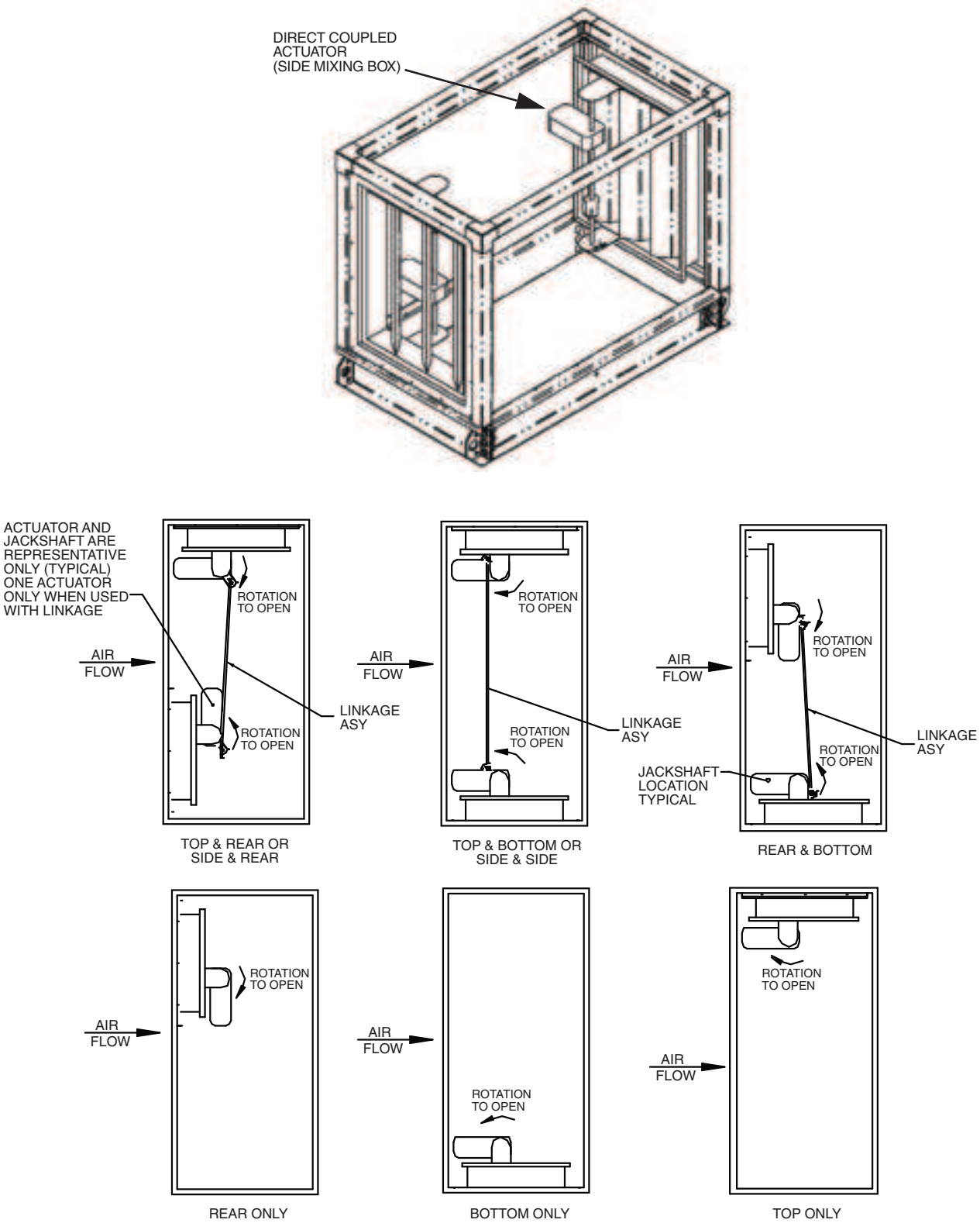

Fig. 47 — Mixing Box/Filter Mixing Box, Typical Damper Arrangements (Size 14 Shown)

NOTE: While adjusting linkage, one damper must be fully open and the other fully closed. Top and rear dampers are shipped with both dampers in closed position. Loosen the swivel on the interconnecting linkage bar and fully open rear damper, leaving top damper closed. Retighten the swivel.

Certain damper combinations require that dual actuators or bell-crank linkages be field-provided when jack shafts are 90 degree opposed. This may occur when there is a combination of end dampers with either top or bottom dampers.

FIELD SUPPLIED AND INSTALLED ACTUATORS

If one or two actuators are used, they must be mounted to the outdoor-air damper jackshaft. To properly set the connecting linkages, determine the rotation required to open the outdoor-air damper. Ensure the actuator spring return fully closes the outdoor-air damper.

If more than 2 actuators are used, they must be installed in equal numbers on each jackshaft. To properly set these dampers, determine the rotation required for each damper and mount the actuators so that the spring feature will open the return-air damper and close the outdoor-air damper. Lock each damper actuator to the jackshaft. Remove any factory-supplied connecting linkage between the outdoor air and return-air dampers. Failure to do so will damage the actuators. No additional linkages are required for these applications.

Exhaust damper boxes are shipped with dampers in the closed position.

All damper crankarms have 90 degrees travel from open to closed. They may be adjusted to suit actuator location.

DO NOT mount damper actuators on the unit panels; actuators are shaft mount only. See Table 25 on page 103 for operating torque requirements.

Mixing Box Damper Actuators

The 39M mixing boxes can be supplied with direct mounted damper actuators. Refer to Fig. 48 for typical actuator mounting. Actuators are also available for field installation. See Field Supplied and Installed Actuators section above for more information. Refer to Table 25 on page 103 for damper operating torque.

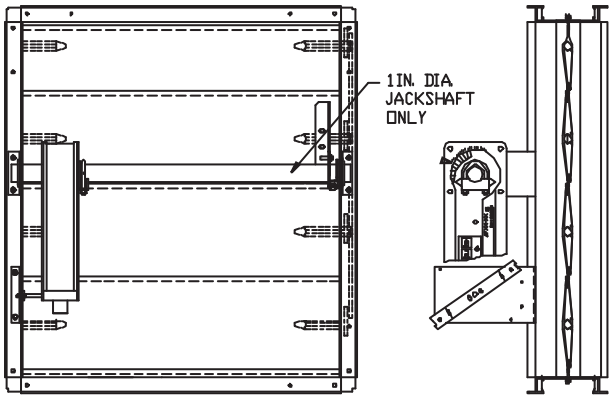

Fig. 48 — Typical Mixing Box Actuator Mounting

To ensure torque is transmitted equally to both damper sections, actuator must be connected to the jackshaft that drives the interconnecting linkage bar. Connection to any other shaft is not recommended.

Vertical Draw-Thru Units

NOTE: Size 21-61 vertical units that exceed the 108-in. maximum height or units with a vertical fan shipping split are shipped with the fan out of its operating position, separate from the vertical coil section. See Fig. 49.

The unit is secured to a wooden skid with lag screws. Remove screws before lifting the unit.

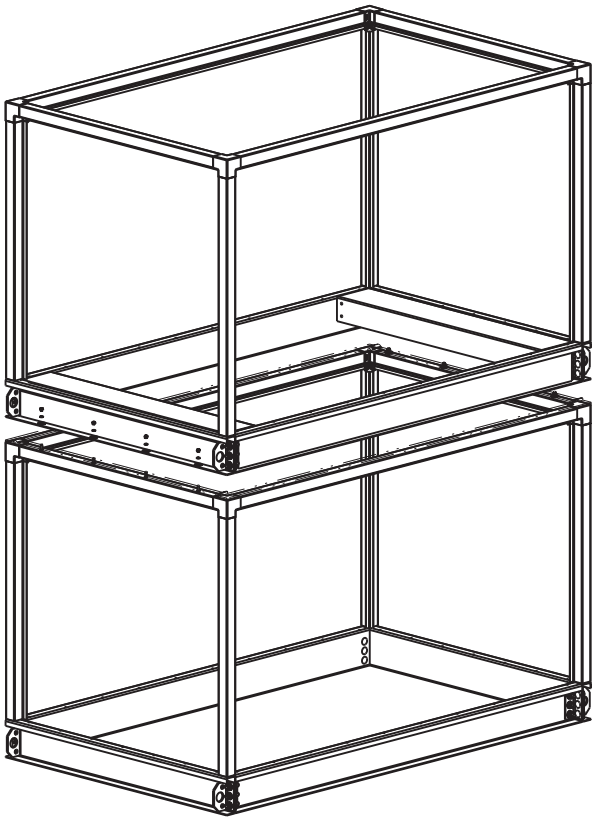

Fig. 49 — Positioning Fan Section on Top of Coil Section

Stacked Supply Fan, Return Fan and Exhaust Box Sections

NOTE: Do not remove the fan spring isolator holddown bolts until the section is installed on the coil section.

1. Rig the fan section using the lifting brackets and place it on top of the coil section. See Fig. 49.
2. Secure the fan and coil sections together using the supplied flat washer, the lock washer and the lock nut onto the stud. See Fig. 50. Screw the base rail of the top unit to the top frame rail of the bottom unit.

Stacked Units Turning Plenum

In a stacked unit configuration (one or multiple sections stacked on top of one or multiple sections), the units are typically connected by a turning plenum (Fig. 51). The upper turning plenum must be sealed and attached to the lower turning plenum with field-supplied gasketing and hardware. Suggested closed cell gasketing is 0.25 in. x 1.50 in. (for example, McMaster 8694K94 or Grainger 6YLW0). Suggested hardware is 1/4-14 self-drilling screws spaced at a minimum of 12 in. apart. Clearance and engagement holes must be drilled in the field through the base rail into the top frame rail.

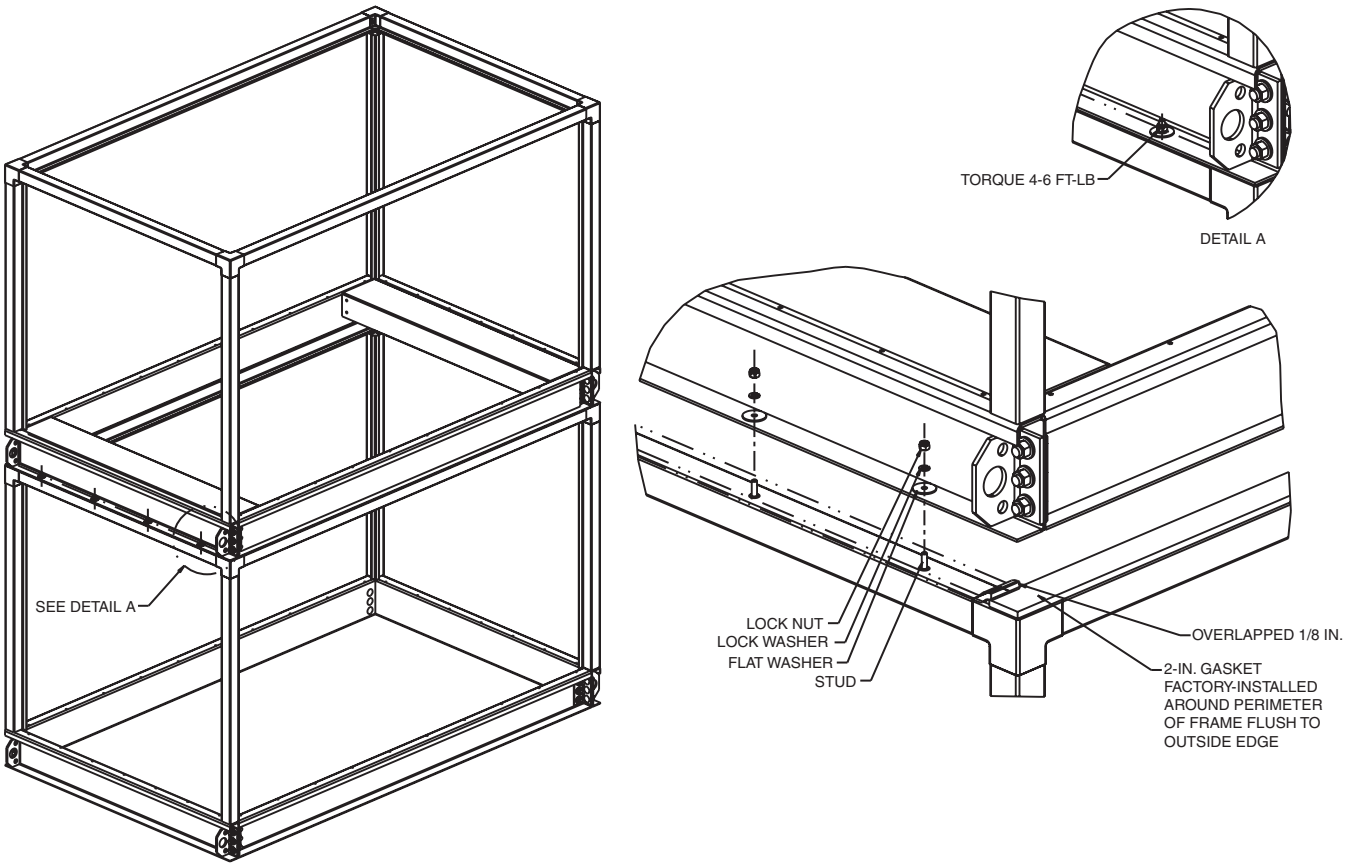

Fig. 50 — Securing Fan and Coil Sections Together

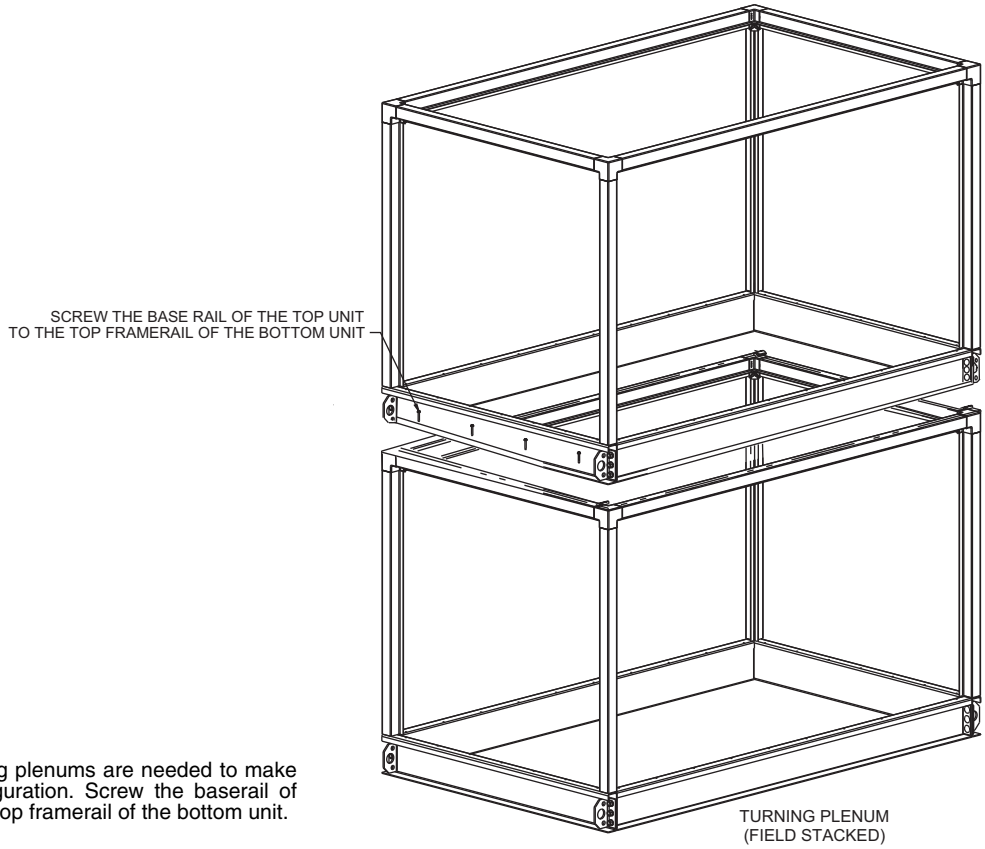

NOTE: Two turning plenums are needed to make the stacked configuration. Screw the baserail of the top unit to the top framerail of the bottom unit.

Fig. 51 — Stacked Turning Plenum

Fan Sled Disassembly

In some cases, it may be necessary to remove the fan sled from the unit and break it down into smaller components. See Tables 26-29 and Fig. 52 for maximum complete fan sled dimensions and housing only dimensions.

To remove the fan sled:

1. Remove all of the panels except the fan discharge panel from the fan section.
2. Disconnect the vibration absorbent discharge seal by unscrewing the seal channels from the discharge of the fan housing. Remove the fan discharge panel.
3. On larger units, the fan sled may be extremely heavy. Remove the top and vertical frame members of the fan section by removing the 4 screws from each frame to corner piece connection.
4. If complete fan sled removal is required, unscrew bolts holding the isolator base to the bottom of the unit.
5. Disassemble fan and fan housing in place and/or affix appropriate rigging to remove the required components, noting in a diagram where each component is attached. Components should be removed in the following order:
   a. Belts and sheaves
   b. Motor
   c. Fan shaft
   d. Fan wheel
      1) Double-width, double inlet forward curved fan wheels are removed through the fan discharge opening.
      2) Double-width, double inlet airfoil wheels are removed through the side of the housing after removal of the drive side inlet volute.
      3) Single-width, single inlet plenum fan airfoil wheels are removed from the fan cabinet through a side, end, or top not obstructed by a discharge opening.
   e. Fan housing

NOTE: Install the preceding components in the reverse order.

Fan Sled Dimensions

See Tables 26-29 and Fig. 52 for fan sled dimensions.

NOTE: To avoid unnecessary stresses on bearing and fan components; the fan, fan sled or fan section should not be tilted on its side. These stresses may lead to eventual component failure.

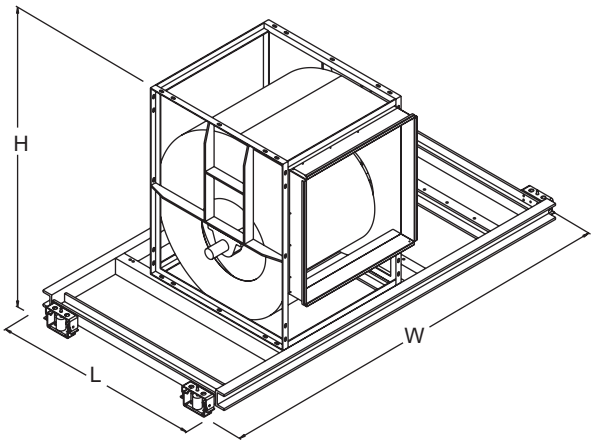

AIRFOIL/FORWARD CURVE
HORIZONTAL DISCHARGE SHOWN

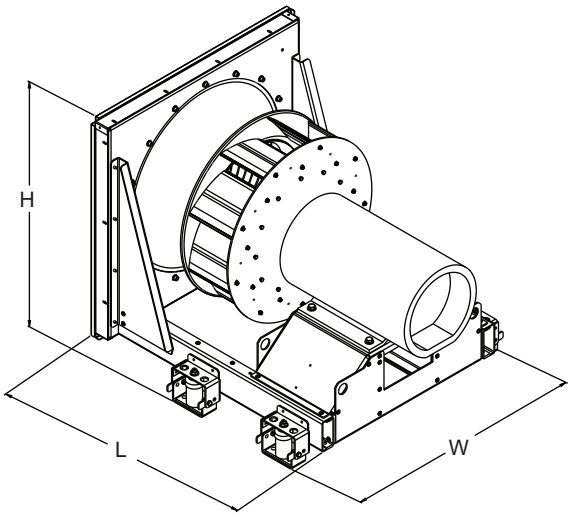

DIRECT DRIVE PLENUM FAN
WITH T FRAME MOTOR

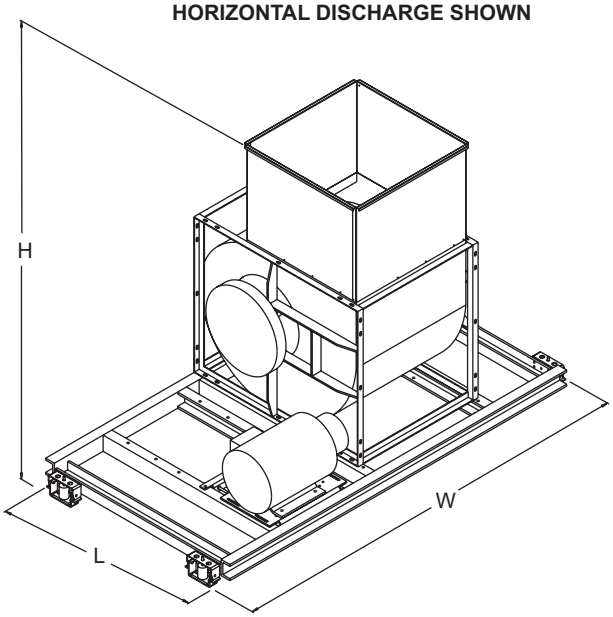

AIRFOIL/FORWARD CURVE
UPBLAST DISCHARGE SHOWN

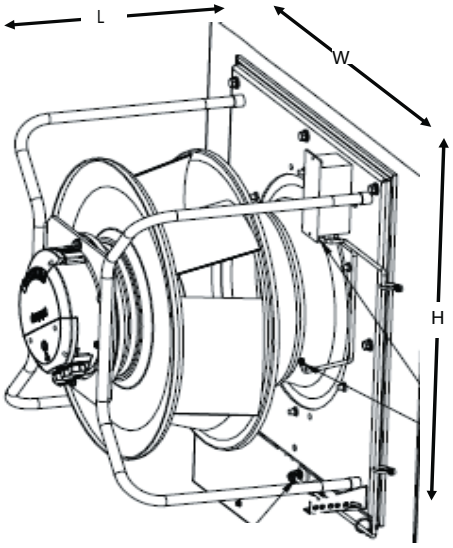

DIRECT DRIVE PLENUM FAN WITH EC MOTOR

Fig. 52 — Fan Sled

Table 26 — Airfoil Fan Dimensions (in.)

FAN WHEEL	UNIT SIZES	FAN SLED ASSEMBLY[a]					
		ALL		THF	BHF	DB	UB
		Length	Width[b]	Height	Height	Height	Height
AF 101	03W,06W	34.0	23.5	26.0	25.8	24.8	28.6
AF 121	06W	36.0	33.5	26.8	28.1	26.9	28.6
	08W,10W	36.0	33.5	26.8	28.1	26.9	31.6
	07T, 09T	42.0	27.8	27.5	29.6	28.1	28.7
AF 131	08W (THF, BHF, UB)	28.5	45.5	29.9	30.6	28.9	31.6
	08W (DB)	34.5	45.5	29.9	30.6	28.9	31.6
	10W	28.5	58.5	29.9	30.6	28.9	31.6
	12W	28.5	58.5	29.9	30.6	28.9	38.6
	14W	28.5	58.5	29.9	30.6	28.9	38.6
	07T, 09T, 11T, 12T, 16T (THF, BHF)	46.3	30.0	29.0	30.6	—	—
	07T, 09T, 11T, 12T, 16T (DB, UB)	49.3	30.0	—	—	28.8	29.3
AF 161	12W	34.5	58.5	36.8	36.9	36.0	38.6
	14W	40.5	63.5	36.8	36.9	36.2	38.6
	17W	40.5	63.5	36.8	36.9	36.2	41.6
	11T, 12T, 16T, 18T (THF, BHF)	54.3	35.1	36.4	37.4	—	—
	11T, 12T, 16T, 18T (DB, UB)	57.6	35.1	—	—	36.4	36.5
AF 181	17W	40.5	70.5	39.8	40.1	39.6	41.6
	21W	40.5	70.5	39.8	40.1	39.6	51.6
	18T, 22T (THF, BHF)	57.3	38.1	39.4	40.6	—	—
	18T, 22T (DB, UB)	60.4	38.1	—	—	39.6	39.3
AF 201	21W,25W	40.5	72.0	45.1	44.3	43.3	51.6
	22T, 25T, 30T (THF, BHF)	59.8	40.4	44.1	44.3	—	—
	22T, 25T, 30T (DB, UB)	65.4	40.4	—	—	43.1	42.8
AF 221	25W	52.5	77.5	49.3	48.1	47.4	51.6
	30W	52.5	95.5	49.3	48.1	47.6	51.6
	25T (THF, BHF)	61.8	43.6	48.3	48.1	—	—
	25T (DB, UB)	67.5	43.6	—	—	47.2	46.5
	30T (THF, BHF)	65.8	43.6	48.3	48.1	—	—
	30T (DB, UB)	70.5	43.6	—	—	47.2	46.5
AF 241	36W	47.5	100.5	55.5	56.1	53.0	62.6
	35T, 37T (THF, BHF)	70.8	46.1	55.7	57.6	—	—
	35T, 37T (DB, UB)	77.8	46.1	—	—	54.4	54.0
AF 271	36W	47.5	100.5	60.4	61.1	—	62.6
	40W	53.5	100.5	60.4	61.1	57.8	68.6
	35T, 37T (THF, UBF)	73.1	50.1	60.6	62.5	—	—
	35T, 37T (DB, UB)	80.8	50.1	—	—	59.2	58.3
	42T (THF, BHF)	82.0	64.0	61.4	62.1	—	—
	42T (DB, UB)	82.0	64.0	—	—	58.8	57.8
AF 301	40W	53.5	100.5	66.0	66.1	—	68.6
	50W	59.5	108.5	66.0	66.1	59.5	78.6
	61W	59.5	108.5	66.0	66.1	59.5	93.6
	42T (THF, UBF)	87.0	69.0	67.1	67.2	—	—
	42T (DB, UB)	87.0	69.0	—	—	60.6	63.3
	51T (THF, UBF)	90.0	69.0	67.1	67.2	—	—
	51T (DB, UB)	90.0	69.0	—	—	60.6	63.3
AF 32	72W (THF)	57.2	78.2	64.2	—	—	—
	72W (BHF)	57.2	78.2	—	63.7	—	—
	72W (DB)	61.8	79.4	—	—	51.3	—
	72W (UB)	57.8	78.2	—	—	—	56.4
AF 331	50W	59.5	108.5	71.7	72.2	—	78.6
	61W	65.5	108.5	71.7	72.2	64.4	93.6
	51T	95.3	64.9	72.8	73.3	69.9	68.8
	58T	97.3	64.9	72.8	73.3	69.9	68.8
AF 361	61W	65.5	108.5	78.7	79.5	—	93.6
	58T	99.6	72.0	79.3	80.7	76.2	76.8
AF 36	72W,85W,96W (THF)	63.2	86.6	71.3	70.8	57.3	62.5
	72W,85W,96W (BHF)	63.2	86.6	71.3	70.8	57.3	62.5
	72W,85W,96W (DB)	68.9	87.9	71.3	70.8	57.3	62.5
	72W,85W,96W (UB)	64.9	86.6	71.3	70.8	57.3	62.5

Table 26 — Airfoil Fan Dimensions (in.) (cont)

FAN WHEEL	UNIT SIZES	FAN SLED ASSEMBLY[a]					
		ALL		THF	BHF	DB	UB
		Length	Width[b]	Height	Height	Height	Height
AF 40	85W,96W,110W (THF)	68.4	98.0	78.7	—	—	—
	85W,96W,110W (BHF)	68.4	98.0	—	78.1	—	—
	85W,96W,110W (DB)	75.8	99.7	—	—	62.5	—
	85W,96W,110W (UB)	71.3	98.0	—	—	—	68.7
AF 44	110W (THF, BHF)	67.3	105.2	89.2	89.2	—	—
	110W (DB, UB)	81.7	105.2	—	—	77.1	77.2

NOTE(S):

a. Different fan discharge positions have different dimensions. The values shown are for the largest overall dimensions.
b. Width equals shaft end to shaft end.b.

LEGEND

BHF — Bottom Horizontal Front
DB — Downblast
THF — Top Horizontal Front
UB — Upblast
— — Not Available

Table 27 — Forward Curve Fan Dimensions (in.)

FAN WHEEL	39M UNIT SIZES	FAN SLED ASSEMBLY					
		ALL		THF	BHF	DB	UB
		Length	Width[a]	Height	Height	Height	Height
A9-4A	03W,06W (THF, BHF, UB)	17.5	26.4	23.5	23.5	—	28.6
	03W,06W (DB)	17.5	28.4	—	—	22.0	—
A10-8A	06W	23.5	39.0	26.6	26.6	23.7	28.6
	08W	28.5	47.0	24.6	26.6	21.7	31.6
	07T, 09T (THF, BHF)	33.7	23.7	26.2	28.2	23.4	24.4
	07T, 09T (DB, UB)	36.5	23.7	26.2	28.2	23.4	24.4
A12-11A	12W	34.5	60.0	28.8	30.9	25.8	38.6
A12-12A	08W	28.5	47.0	27.6	29.6	24.6	31.6
	10W	28.5	60.0	26.5	28.0	23.5	31.6
	12W	28.5	60.0	26.5	28.0	23.5	38.6
	07T, 09T (THF, BHF)	36.5	28.8	29.2	31.2	26.2	27.3
	07T, 09T (DB, UB)	39.5	28.8	29.2	31.2	26.2	27.3
A15-15A	10W	28.5	60.0	30.4	31.9	26.8	31.6
	12W	34.5	60.0	32.7	34.7	29.1	38.6
	14W	40.5	65.0	32.7	32.7	29.1	38.6
	17W	40.5	72.0	32.7	34.7	29.1	41.6
	21W	40.5	72.0	32.7	34.7	29.1	51.6
	11T, 12T (THF, BHF)	39.8	31.4	33.1	35.1	29.5	30.5
	11T, 12T (DB, UB)	43.4	31.4	33.1	35.1	29.5	30.5
	16T (THF, BHF)	42.3	31.5	33.1	35.1	29.5	30.5
	16T (DB, UB)	45.9	31.5	33.1	35.1	29.5	30.5
	18T, 22T (THF, BHF)	42.3	31.5	33.1	35.1	29.5	30.5
	18T, 22T (DB, UB)	45.9	31.5	33.1	35.1	29.5	30.5
A18-18A	14W	40.5	65.0	36.8	38.8	32.6	38.6
	17W	40.5	72.0	37.6	39.6	33.4	41.6
	21W, 25W	40.5	72.0	37.6	39.6	33.4	51.6
	16T, 18T (THF, BHF)	44.1	34.7	38.0	40.0	33.8	34.8
	16T, 18T (DB, UB)	48.3	34.7	38.0	40.0	33.8	34.8
A20-15A	25W	52.5	79.0	45.7	47.7	38.9	51.6
	25T (THF, BHF)	51.6	32.6	45.6	47.6	38.8	40.3
	25T (DB, UB)	58.2	32.6	45.6	47.6	38.8	40.3
A20-18A	21W	40.5	72.0	45.2	47.2	38.6	51.6
	25W	52.5	79.0	45.7	47.7	38.9	51.6
	22T, 25T (THF, BHF)	51.6	35.6	45.6	47.6	38.8	40.3
	22T, 25T (DB, UB)	58.2	35.6	45.6	47.6	38.8	40.3
A20-18H	30W	52.5	97.0	45.7	47.7	38.9	51.6
	30T	52.2	62.3	43.6	45.6	38.4	38.4
A20-20H	30W	52.5	97.0	45.7	47.7	38.9	51.6
	36W	52.5	97.0	45.7	47.7	38.9	62.6
	40W	52.5	97.0	45.7	47.7	38.9	68.6
	30T, 35T, 37T	52.2	64.3	43.6	45.6	38.4	38.4
A22-22H	36W	52.5	100.5	47.4	47.4	40.1	62.6
	35T, 37T (THF, BHF)	54.6	40.1	49.1	51.1	41.8	43.3
	35T, 37T (DB, UB)	61.9	40.1	49.1	51.1	41.8	43.3

Table 27 — Forward Curve Fan Dimensions (in.) (cont)

FAN WHEEL	39M UNIT SIZES	FAN SLED ASSEMBLY					
		ALL		THF	BHF	DB	UB
		Length	Width[a]	Height	Height	Height	Height
A25-20H	40W	52.5	100.5	52.6	52.6	44.2	68.6
	42T (THF, BHF)	58.8	39.1	54.3	56.3	46.0	47.5
	42T (DB, UB)	66.9	39.1	54.3	56.3	46.0	47.5
A25-25H	36W	52.5	100.5	52.6	52.6	44.2	62.6
	40W	52.5	100.5	52.6	52.6	44.2	68.6
	50W	52.5	100.5	52.6	52.6	44.2	78.6
	35T, 37T, 42T (THF, UBF)	58.8	44.1	54.3	56.3	45.0	47.5
	35T, 37T, 42T (DB, UB)	66.9	44.1	54.3	56.3	45.0	47.5
A27-22H	50W	55.5	108.5	57.4	57.4	48.6	78.6
	51T (THF, UBF)	65.3	41.7	59.1	61.1	50.3	51.8
	51T (DB, UB)	73.9	41.7	59.1	61.1	50.3	51.8
A27-27H	50W	55.5	108.5	57.4	57.4	48.6	78.6
	61W	58.5	108.5	57.4	57.4	48.6	93.6
	51T, 58T (THF, BHF)	65.3	47.2	59.1	61.1	50.3	51.8
	51T, 58T (DB, UB)	73.9	47.2	59.1	61.1	50.3	51.8
A30-30H	61W	58.5	108.5	61.4	61.4	51.7	93.6
	58T (THF, BHF)	68.5	49.7	63.1	65.1	53.5	55.0
	58T (DB, UB)	77.9	49.7	63.1	65.1	53.5	55.0
32	72W (THF, BHF, UB)	59.3	78.2	64.2	63.7	51.3	56.4
	72W (DB)	63.3	79.4	64.2	63.7	51.3	56.4
36	72W, 85W (THF, BHF)	64.6	83.0	71.3	70.8	57.3	62.5
	72W, 85W (DB)	70.4	83.0	71.3	70.8	57.3	62.5
	72W, 85W (UB)	66.4	84.2	71.3	70.8	57.3	62.5
40	85W, 96W, 110W (THF, BHF)	69.6	88.4	78.7	78.1	62.5	68.7
	85W, 96W, 110W (DB)	77.3	90.1	78.7	78.1	62.5	68.7
	85W, 96W, 110W (UB)	72.8	88.4	78.7	78.1	62.5	68.7

NOTE(S):

a. Width equals shaft end to shaft end.

LEGEND

BHF — Bottom Horizontal Front
DB — Downblast
THF — Top Horizontal Front
UB — Upblast
— — Not Available

Table 28 — Direct Drive Plenum Fan Assembly with NEMA Motor — Dimensions (in.)

FAN WHEEL	39M UNIT SIZES (Single DDPF)	39M UNIT SIZES (Dual DDPF)	FAN SLED ASSEMBLY		
			LENGTH	WIDTH	HEIGHT
105	03W	n/a	21.0	19.4	18.2
122	03W	n/a	22.5	21.6	20.2
135	06W,07T	08W,10W	23.6	22.7	21.0
150	08W,09T	10W,12W,14W	27.0	25.4	22.9
165	06W,07T,08W,09T,10W,11T	12W,14W,17W,21W	27.8	27.0	24.5
182	08W,09T,10W,11T,12W,14W	17W,21W,25W,30W	31.1	29.1	26.8
200	10W,11T,12W,12T,14W,16T	n/a	32.8	31.5	29.5
222	12W,14W,16T,17W,18T	25W,30W,36W,40W	36.3	34.6	32.0
245	14W,16T,17W,18T, 21W,22T,25T	n/a	37.8	37.4	34.9
270	17W,18T,21W,22T,25W, 25T,30W,30T,35T	36W,40W,50W	40.6	41.0	34.7
300	21W,22T,25W,25T,30T,36W,37T	50W,61W	46.6	44.7	40.9
330	25W,30W,30T,35T,40W,42T	61W,72W	48.4	47.9	43.5
365	30W,35T,36W,37T,40W,42T,50W,51T,58T,61W	72W,85W,96W,110W	51.8	51.4	46.7
402	36W,37T,40W,42T,50W,51T,58T,61W	85W,96W,110W	54.8	52.3	53.6

Table 29 — Direct Drive Plenum Fan Assemblies with EC Motors, Dimensions (in.), Weight (lb)

SUPPLIER	SUBMITTAL	FAN WHEEL	MOTOR (kW)	ASSEMBLY HEIGHT	ASSEMBLY WIDTH	ASSEMBLY LENGTH	ASSEMBLY WEIGHT
EBM Papst	PEBM0102	310	1.50	19.70	19.70	13.78	47.1
	PEBM0103	310	3.05	19.70	19.70	14.06	46.2
	PEBM0104	310	2.95	19.70	19.70	14.06	46.2
	PEBM0105	400	6.10	19.70	19.70	16.83	80.0
	PEBM0106	400	6.40	19.70	19.70	16.83	80.0
	PEBM0107	400	3.65	19.70	19.70	16.37	66.0
	PEBM0108	400	3.80	19.70	19.70	16.37	66.0
	PEBM0109	450	3.85	24.80	24.80	17.88	81.4
	PEBM0110	450	4.45	24.80	24.80	17.88	81.4
	PEBM0111	450	5.05	24.80	24.80	22.46	103.4
	PEBM0112	450	5.45	24.80	24.80	22.46	103.4
	PEBM0113	500	5.70	24.80	24.80	23.66	111.1
	PEBM0114	500	6.40	24.80	24.80	23.66	108.7
Ziehl-Abegg	PEZA0115	310	2.20	18.50	18.50	11.61	35.3
	PEZA0116	310	1.90	18.50	18.50	11.61	35.3
	PEZA0117	310	1.35	18.50	18.50	11.61	35.3
	PEZA0118	310	3.80	17.72	17.72	12.99	41.9
	PEZA0119	350	2.50	19.69	19.69	12.44	37.5
	PEZA0120	350	1.90	19.69	19.69	12.44	37.5
	PEZA0121	400	4.10	21.65	21.65	14.49	79.4
	PEZA0122	400	3.40	21.65	21.65	14.49	79.4
	PEZA0123	400	5.40	21.65	21.65	14.49	79.4
	PEZA0124	400	5.80	21.65	21.65	13.58	77.2
	PEZA0125	450	3.60	24.80	24.80	15.63	88.2
	PEZA0126	450	5.60	24.80	24.80	15.63	88.2
	PEZA0127	500	5.40	26.38	26.38	17.76	110.3
	PEZA0128	560	5.20	28.74	28.74	19.02	132.3

Fan Motors and Drives

When installing motors in the field, locate the electrical junction box toward the center of the unit. This arrangement is required for correct belt tension. Use the smallest mounting holes in the mounting base that will accommodate the motor and provide minimum overhang.

Tighten the motor holddown bolts. Refer to Table 5 for fan scroll inlet cone dimensions.

JUNCTION BOX CONDENSATE PREVENTION

When air handlers are installed outdoors in a high humidity environment or indoors where the apparatus room is used as a fresh air plenum, precautions must be taken to prevent condensation from forming inside the junction box of the internally mounted motor.

Standard installation practice is to mount the motor starter or fused disconnect box adjacent to the air handler and enclose the power wiring to the motor in flexible conduit.

The sheet metal housing of the disconnect switch or motor starter is not airtight (even when a box meeting NEMA [National Electrical Manufacturers Association] IV standards is used). Thus, warm moist air can migrate through the flexible conduit to the junction box on the motor. With the motor located inside the unit, the motor temperature is that of the cool supply air, so condensate can form inside the junction box and, possibly, on the live terminal lugs.

To prevent the moist air from migrating through the conduit to the motor, seal the power wires inside the flexible conduit at the motor starter or fused disconnect (Fig. 53).

Use a nonconductive, non-hardening sealant. Permagum (manufactured by Schnee Morehead) or sealing compound, thumb grade (manufactured by Calgon), are acceptable materials.

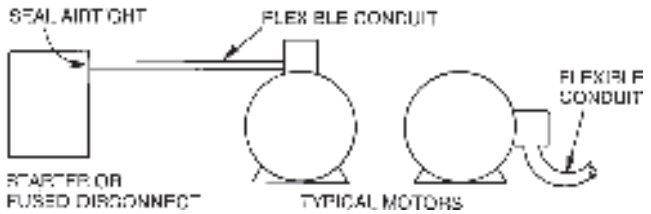

Fig. 53 — Sealing Power Wires in Flexible

Motor Power Wiring

The fan section is provided with a decal indicating the recommended location to drill or punch hole(s) to accommodate an electrical conduit for the fan-motor wiring. The decal is located on the motor side, approximately 4 in. in from the side and 4 in. down from the top of the corner above where the motor will be installed. Where possible, the conduit should be installed in a panel which will not be removed, such as the discharge panel.

SINGLE-POINT POWER WIRING (SPP) (OPTION)

If single-point power option has been requested, power wiring will be factory installed from the fan motor controller to the unit single-point power enclosure installed on the unit supply fan.

NOTE: The SPP enclosure is provided with labels indicating acceptable wiring, penetration locations for line power. All motors are wired in the factory and are provided with overload protection.

EC MOTOR FAN POWER BOX WIRING

The ECMFP box is provided with labels indicating acceptable wiring penetration locations. All motors are wired in the factory and are provided with overload protection.

MOTOR OVERLOAD PROTECTION

Fan-motor starters and overload protectors are field-supplied and installed. A label on the fan motor indicates the correct size of the overload protectors required to be installed in the motor starter.

Sheaves

Factory-supplied drives are pre-aligned and tensioned. However, Carrier recommends checking the belt tension and alignment before starting the unit. Always check the drive alignment after adjusting belt tension.

To install sheaves on the fan or motor shaft, remove any rust-preventive coating on the shaft. Make sure the shaft is clean and free of burrs. Add grease or lubricant to bore of sheave before installing. Mount sheave on the shaft; to prevent bearing damage, do not use excessive force (i.e., a hammer). Place sheaves for minimum overhang (see Fig. 54).

Each factory-assembled fan, shaft, and drive sheave assembly is precision aligned and balanced. If excessive unit vibration occurs after field replacement of sheaves, the unit should be rebalanced. To change the drive ratio, reselect and replace the motor sheave, not the fan sheave.

After 24 hours of unit operation, the drive belts may stretch. Check the belt tension after 24 hours of operation and adjust if necessary. Periodically check belt tension throughout the run-in period, which is normally the initial 72 hours of operation.

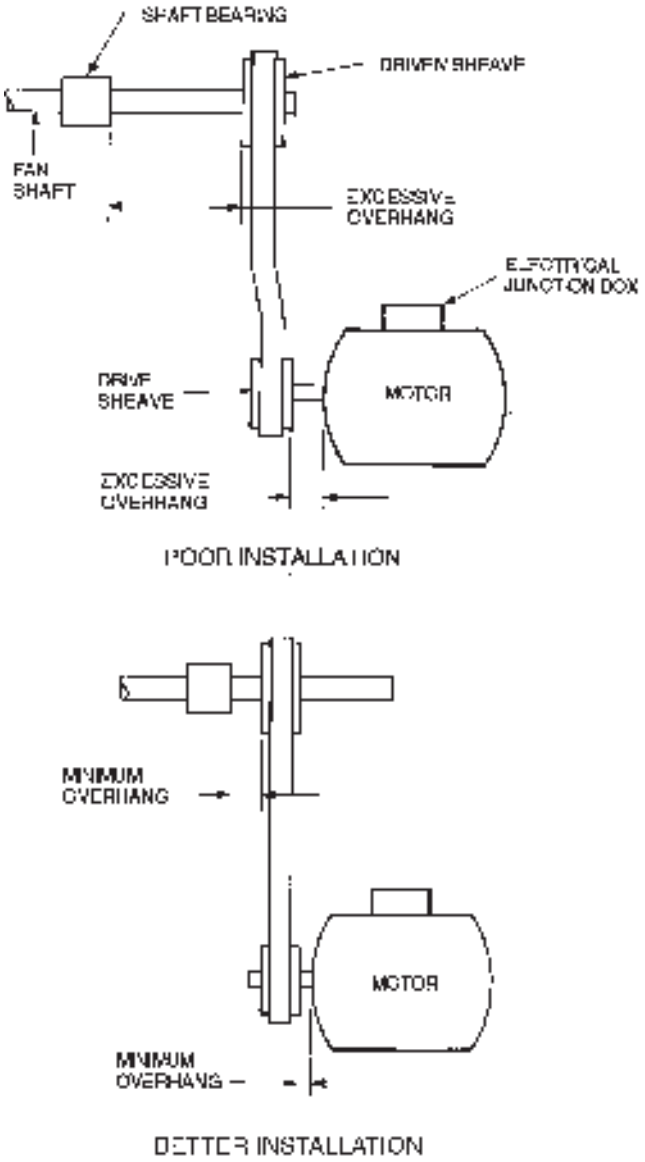

Fig. 54 — Determining Sheave-Shaft Overhang

ALIGNMENT

Make sure that fan shafts and motor shafts are parallel and level. The most common causes of misalignment are nonparallel shafts and improperly located sheaves. Where shafts are not parallel, belts on one side are drawn tighter and pull more than their share of the load. As a result, these belts wear out faster, requiring the entire set to be replaced before it has given maximum service. If misalignment is in the sheave, belts enter and leave the grooves at an angle, causing excessive belt and sheave wear.

1. Shaft alignment can be checked by measuring the distance between the shafts at 3 or more locations. If the distances are equal, then the shafts are parallel.
2. Sheave Alignment:

   Fixed sheaves — To check the location of the fixed sheaves on the shafts, a straightedge or a piece of string can be used. If the sheaves are properly aligned, the string will touch them at the points indicated by the arrows in Fig. 55.

   Adjustable sheaves — To check the location of adjustable sheave on shaft, make sure that the centerlines of both sheaves are in line and parallel with the bearing support channel. See Fig. 55. Adjustable pitch drives are installed on the motor shaft. Carrier recommends that adjustable sheaves should only be used for initial balancing and should be replaced with fixed pitch sheaves by the air balancer prior to the final system air balance.

⚠ CAUTION

Do not exceed maximum fan speed rpm with adjustable sheave. Equipment damage may result.

3. Rotate each sheave one-half revolution to determine whether the sheave is wobbly or the drive shaft is bent. Correct any misalignment.
4. With sheaves aligned, tighten cap screws evenly and progressively.

NOTE: There should be a 1/8-in. to 1/4-in. gap between the mating part hub and the bushing flange. If gap is closed, the bushing is probably the wrong size.

5. With taper-lock bushed hubs, be sure the bushing bolts are tightened evenly to prevent side-to-side pulley wobble. Check by rotating sheaves and rechecking sheave alignment. When substituting field-supplied sheaves for factory-supplied sheaves, consider that fan shaft sheave has been factory balanced with fan and shaft as an assembly. For this reason, substitution of motor sheave is preferable for final speed adjustment.

V-Belts

When installing or replacing belts, always use a complete set of new belts. Mixing old and new belts will result in the premature wear or breakage of the newer belts. See Fig. 56.

Refer to label on inside of fan access door for information on factory-supplied drive.

1. Always adjust the motor position so that V-belts can be installed without stretching over grooves. Forcing belts can result in uneven stretching and a mismatched set of belts.
2. **Do not allow belt to bottom out in sheave.**
3. Tighten belts by turning motor-adjusting jackscrews. Turn each jackscrew an equal number of turns.
4. Equalize belt slack so that it is on the same side of belt for all belts. Failure to do so may result in uneven belt stretching.
5. Tension new drives at the deflection force recommended (Table 30).

On current production, the correct tension information is listed on the fan drive label. For older equipment or for units with field-modified drives, use the deflection formula given in the following example and the tension data from Table 30.

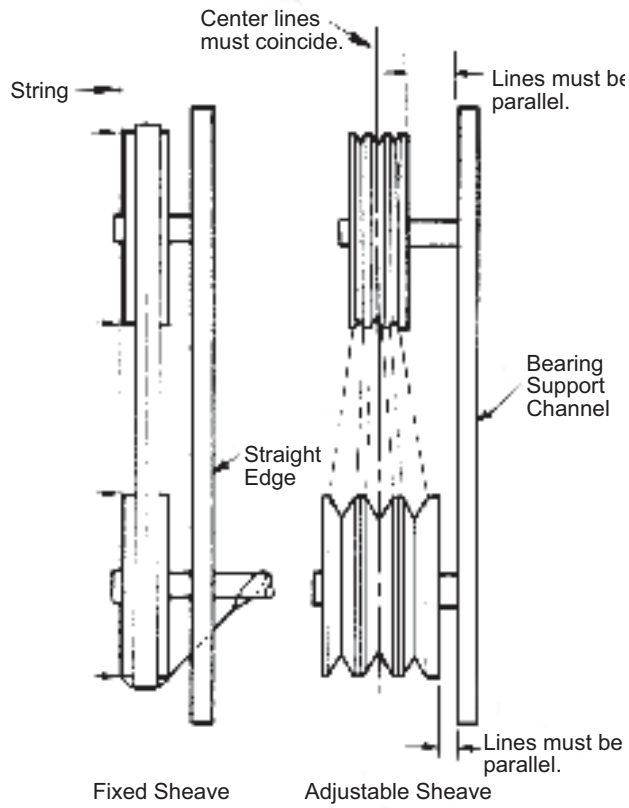

Fig. 55 — Determining Sheave-Shaft Alignment

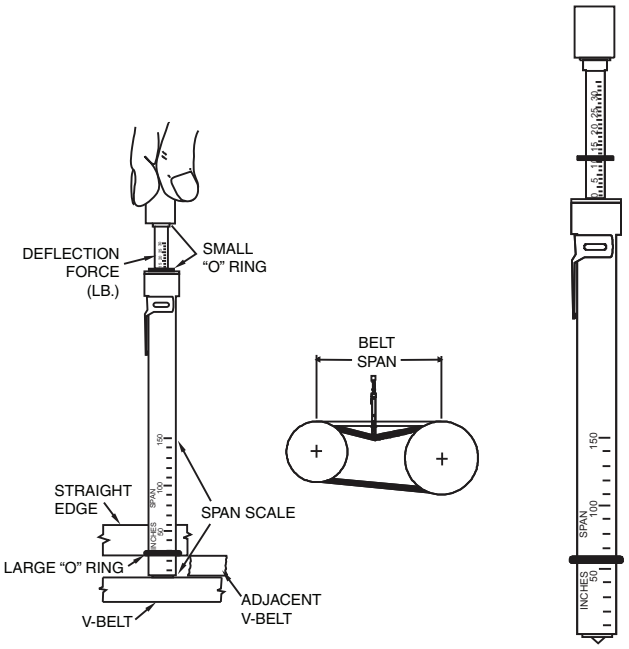

Fig. 56 — Fan Belt Tension

Table 30 — Fan Belt Tension Data

SHEAVE DIAMETER (in.) DEFLECTION FORCE (lb)						
BELT STYLE	SMALLEST SHEAVE DIAMETER RANGE	RPM RANGE	BELT DEFLECTION FORCE			
			SUPER GRIP BELTS AND UNNOTCHED GRIPBANDS		GRIP NOTCH BELTS AND NOTCHED GRIPBANDS	
			USED BELT	NEW BELT	USED BELT	NEW BELT
A, AX	3.0 - 3.6	1000-2500 2501-4000	3.7 2.8	5.5 4.2	4.1 3.4	6.1 5.0
	3.8 - 4.8	1000-2500 2501-4000	4.5 3.8	6.8 5.7	5.0 4.3	7.4 6.4
	5.0 - 7.0	1000-2500 2501-4000	5.4 4.7	8.0 7.0	5.7 5.1	8.4 7.6
B, BX	3.4 - 4.2	860-2500 2501-4000	— —	— —	4.9 4.2	7.2 6.2
	4.4 - 5.6	860-2500 2501-4000	5.3 4.5	7.9 6.7	7.1 6.1	10.5 9.1
	5.8 - 8.6	860-2500 2501-4000	6.3 6.0	9.4 8.9	8.5 7.3	12.6 10.9
C, CX	7.0 - 9.0	500-1740 1741-3000	11.5 9.4	17.0 13.8	14.7 11.9	21.8 17.5
	9.5 - 16.0	500-1740 1741-3000	14.1 12.5	21.0 18.5	15.9 14.6	23.5 21.6
D	12.0 - 16.0	200-850 851-1500	24.9 21.2	37.0 31.3	— —	— —
	18.0 - 20.0	200-850 851-1500	30.4 25.6	45.2 38.0	— —	— —
3V, 3VX	2.2 - 2.4	1000-2500 2501-4000	— —	— —	3.3 2.9	4.9 4.3
	2.65 - 3.65	1000-2500 2501-4000	3.6 3.0	5.1 4.4	4.2 3.8	6.2 5.6
	4.12 - 6.90	1000-2500 2501-4000	4.9 4.4	7.3 6.6	5.3 4.9	7.9 7.3
5V, 5VX	4.4 - 6.7	500-1749 1750-3000 3001-4000	— — —	— — —	10.2 8.8 5.6	15.2 13.2 8.5
	7.1 - 10.9	500-1749 1750-3000 3001-4000	12.7 11.2	18.9 16.7	14.8 13.7	22.1 20.1
	11.8 - 16.0	500-1749 1750-3000 3001-4000	15.5 14.6	23.4 21.8	17.1 16.8	25.5 25.0
8V	12.5 - 17.0	200-850 851-1500	33.0 26.8	49.3 39.9	— —	— —
	18.0 - 22.4	200-850 851-1500	39.6 35.3	59.2 52.7	— —	— —

EXAMPLE:

Given:

Belt Span	16 in.
Belt Cross-Section A, Super Belt	
Small Sheave PD	5 in.
Small Sheave RPM:	1530
Belt Condition:	New
Deflection =	Belt Span/64

Solution:

a. From Table 30, find that deflection force for a new type A, super belt with 5-in. small sheave PD is 8 lb.

a. Deflection = 16/64 or
= 1/4 in.

TENSION MEASUREMENT PROCEDURE

1. Measure the belt span (see Fig. 56).
2. Position bottom of the large o-ring on the span scale at the measured belt span.
3. Set the small o-ring on the deflection force scale to zero.
4. Place the tension checker squarely on one belt at the center of the belt span. Apply a force on the plunger and perpendicular to the belt span until the bottom of the large o-ring is even with the top of the adjacent (next) belt or with the bottom of a straight edge laid across the outside diameters of the v-belt sheaves.
5. Remove the tension checker and read the force applied from the bottom of the small o-ring on the deflection force scale.
6. Compare the force you have applied with the values given in Table 30. The force should be between the "Used Belt" and "New Belt" values shown. The maximum value is shown for "New Belt" and new belts should be tensioned at this value to allow for expected tension loss. "New Belt" tensions should be used at initial installation and after job start or 1 to 3 minutes of operation. Used belts should be maintained at the value as indicated in the chart. "Used Belt" tensions should be used for the 8-hour and subsequent checks. If the belt span was measured in centimeters, then use the kilograms of force values for comparison.

NOTE: The ratio of deflection to belt span is 1:64 in either units of measurements.

7. Whenever possible, jog start for a few revolutions or preferably run drive for approximately 1 to 3 minutes and then re-tension in accordance with Steps 1-6. Running the drive for a few revolutions or minutes will help seat the belt(s) in the groove(s). This relatively early re-tensioning may reduce or minimize the amount of re-tensioning required in the first 24 hours of drive service.

Direct Drive Fan Alignment

Direct drive fans are aligned in the factory. However, Carrier recommends checking alignment before starting the unit.

1. Ensure the radial distance between fan wheel and inlet cone appears visually equal in all directions.
2. For direct drive plenum fans with NEMA motors, ensure that the fan wheel to inlet cone overlap is within the correct range. See the section Direct Drive Plenum Fans on page 216.
3. Motor and fan are balanced as an assembly. If either changes, rebalancing is required.

Fan Airflow Measurement Piezometer Ring

The Piezometer system is based on the principle of a flow nozzle. The inlet funnel is used as the flow nozzle, and the flow can be calculated by measuring the static pressure drop through the inlet funnel. The pressure drop is measured from the tap located on the face of the inlet funnel to the piezometer in the throat. The front pressure tap, located on the face or outer portion of the inlet ring, is connected to the high-pressure side of the transducer and the piezometer ring is connected to the low-pressure side.

CALCULATION WHEN USING THE PIEZOMETER

For standard air ($\rho = 0.075$ lb/ft^3):

$$CFM = K \cdot \sqrt{\Delta P}$$

- K (K Factor) value: Obtain from Table 6 on page 29.
- ΔP (Delta Pressure): The differential in static pressure from the piezometer and the front pressure tap (in. wg).

If the K factor is not shown in Table 6, perform a pitot tube traverse either before or after the fan where the airflow is most uniform (preferably in the straightest portion of the duct) and at the same time note the Delta Pressure read by the control system. Use the following formula to calculate the K Factor:

$$K = (CFM) \div (\sqrt{\Delta P})$$

⚠ CAUTION

Do not exceed maximum fan speed rpm with variable frequency drive. Equipment damage may result.

Outdoor Hoods and Louvers

Three options are available: fixed rear intake hoods, intake louvers, and collapsible exhaust box hoods. All hoods and louvers have an intake screen to prevent unwanted entry of birds and debris. There is an additional screen available to prevent snow from entering the intake louver. It is attached to the outside of the louver. It can be factory or field installed. The intake hoods have easily serviceable demisters via small hinged doors. Intake louvers are a wind-driven rain design that will allow no more than 0.01 oz per sq ft of free area water penetration at 1250 fpm. This is the maximum velocity required by AMCA (Air Movement and Control Association) 511. Higher velocities are possible without significant water intrusion.

Most fixed rear hoods (Fig. 57) and intake louvers (Fig. 58) ship installed and should require no further assembly. If a rear hood is shipped attached to the skid, do not install the rear hood in the air-handling until the rest of the unit and splits have been completely assembled. Otherwise, the combination of just the hood and mixing box may become a tipping hazard.

Make-Up Air Units (MAU), with no upstream coil from the fan, may need a mesh filter located at the outside air intake. This mesh filter will prevent water from entering the unit and saturating the filters located upstream of the fan. Saturated filters can collapse and be drawn into the fan inlet causing equipment damage.

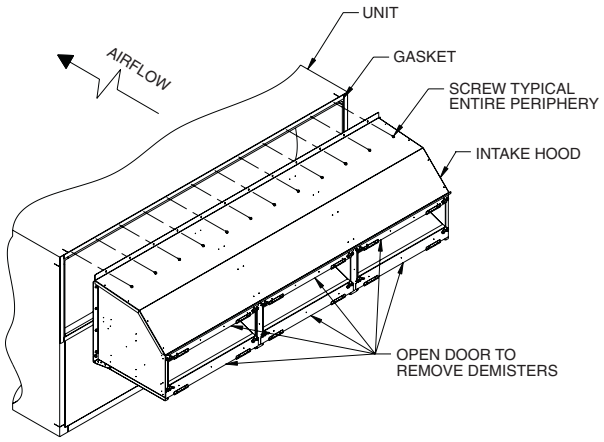

Fig. 57 — Rear Intake Hood (Size 30 Shown)

Collapsible exhaust box hoods ship covering the exhaust outlet of the unit and/or inside the unit and require some basic assembly. Fasteners, washers and gasket material for installation of the hood come taped inside the exhaust section. Figure 59 shows an exploded view of the assembly in its shipping position, and how the various parts assemble to form the hood.

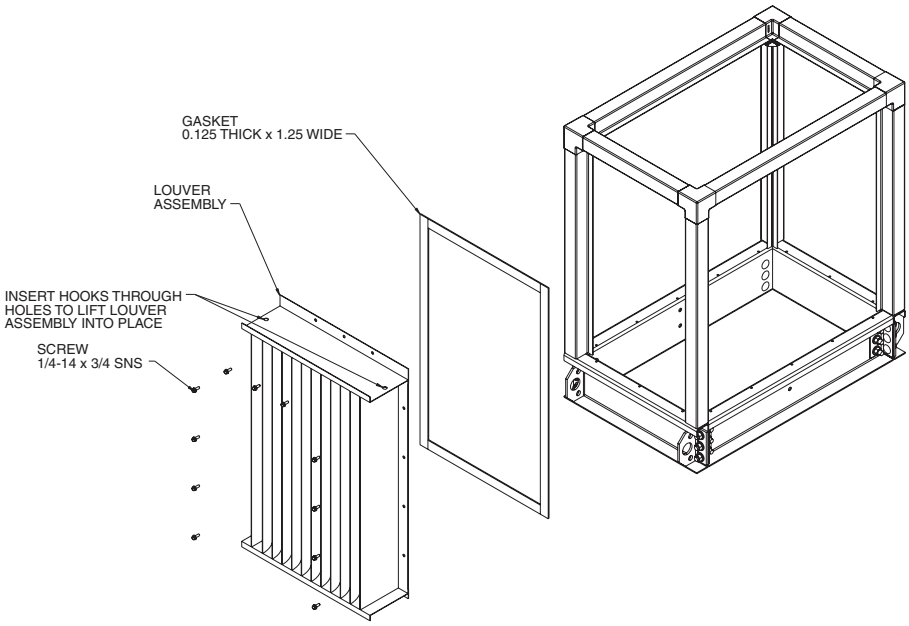

NOTE: All dimensions in inches unless otherwise noted.

Fig. 58 — Intake Louver

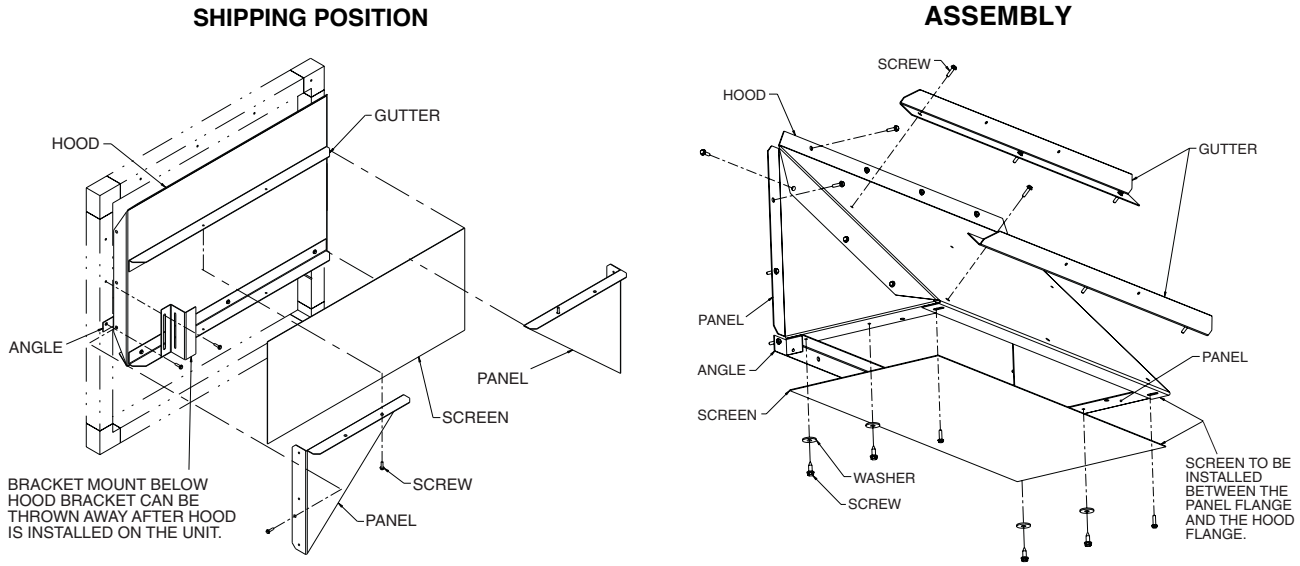

Fig. 59 — Collapsible Exhaust Box Hood

Coil Connection Housing (Outdoor Unit — All Sizes)

Coil connection housings are used to house piping from inside the building to its connections to the coil on the unit. Piping must be insulated to building code standards or job specifications (whichever is greater) for the area where the unit is installed to prevent excessive condensation within the housing; otherwise, water damage to floors below could result.

Install as follows:

NOTE: If coil connection housing (CCH) is located at a section split, be sure to follow procedure, Indoor and Outdoor Unit Shipping Split section, on page 90.

1. The CCH will be shipped to the job site on its own skid, separate from the air-handling unit (AHU) as shown in Fig. 60.
2. Remove the screws in the shipping brackets holding the CCH to the skid. (Do not remove the brackets at this time.) See Fig. 61.
3. Install the self adhesive seal strip (2.00 in. wide x 0.375 in. thick neoprene gasket) to the top surface of the roof curb, making sure that the notch between the CCH roof curb and the unit roof curb is completely covered with gasket. See Fig. 62.

NOTE: Ensure that the surface is clean before installing any gasket.

4. Apply the provided seal strip (1.25 in. wide x 0.125 in. thick neoprene gasket) to both side flashings as shown in Fig. 63.

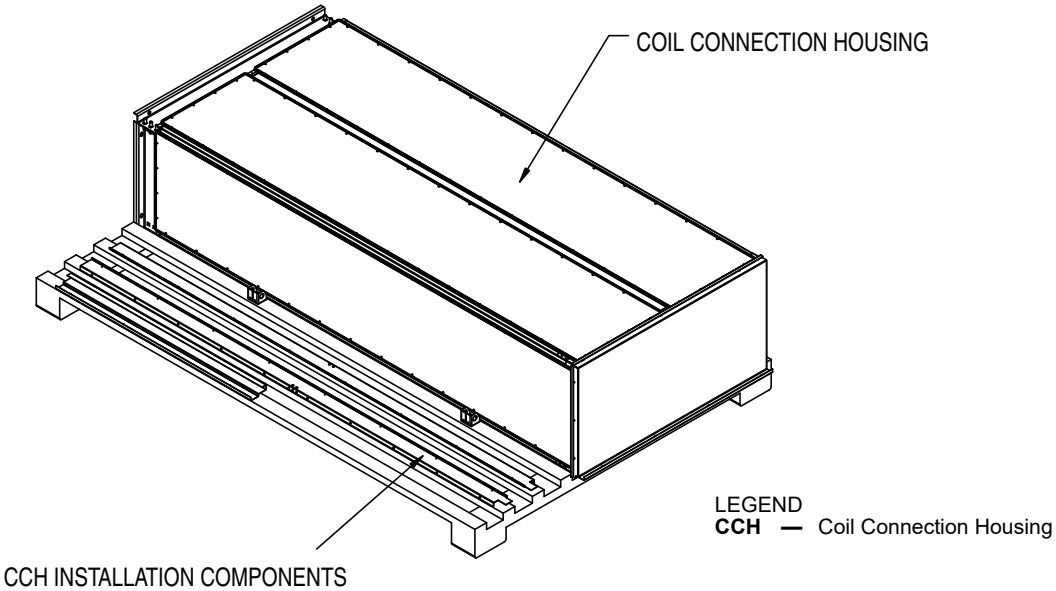

NOTE: Shown as single section component for reference. Housing may bridge across 2 or more section components, increasing skid length requirements.

Fig. 60 — Coil Connection Housing

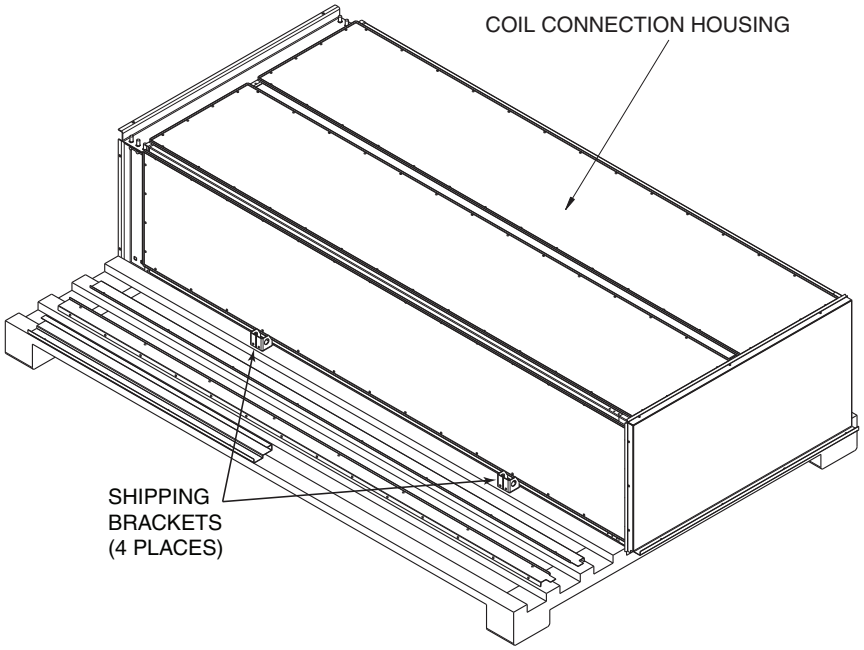

Fig. 61 — Remove Shipping Brackets

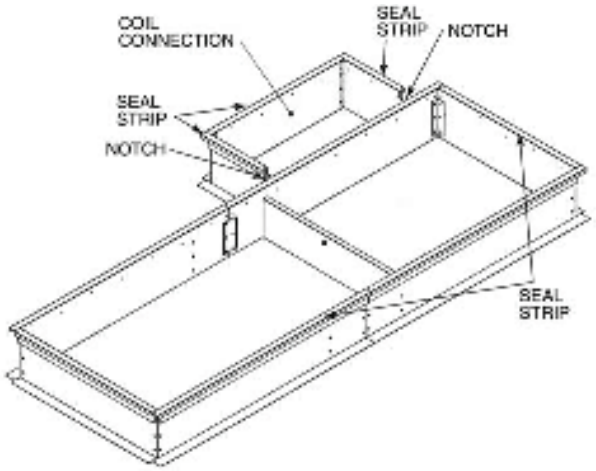

Fig. 62 — Installing Seal Strip

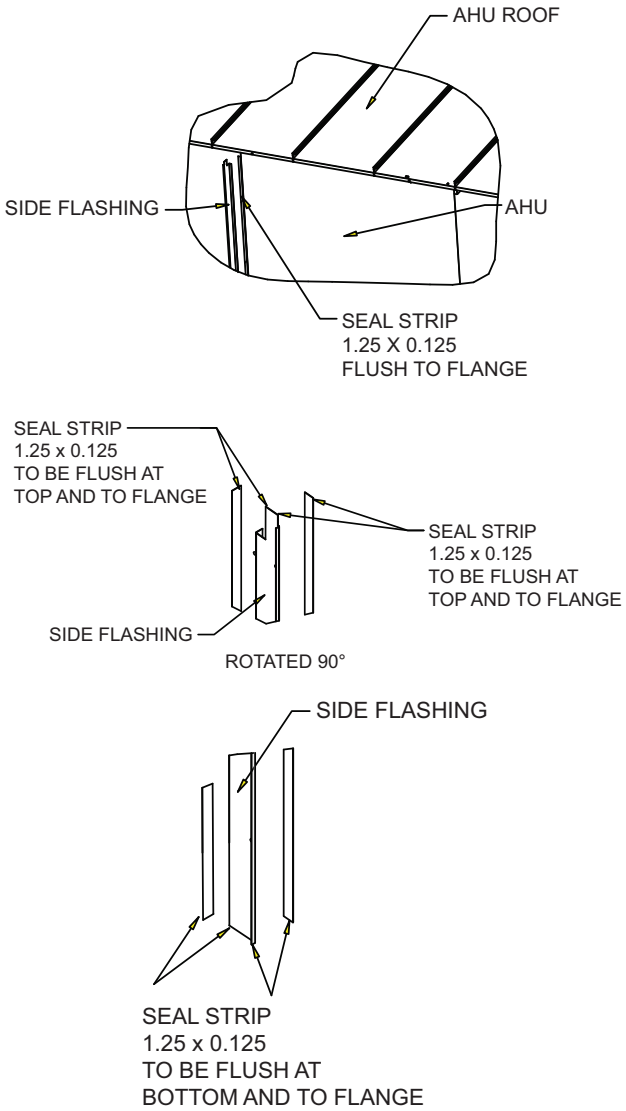

LEGEND
AHU — Air-Handling Unit

NOTE: Measurements are shown in inches.

Fig. 63 — Detailed View of Seal Strip

5. Install the side flashing to the unit by inserting the 1/4 in. — 14 x 3/4 in. screws (provided) into the pre-drilled holes in the unit frames. The bottom end of the flashing must be flush with the base rail tab and the upper end of the flashing must be underneath the roof rail as shown in Fig. 64.
6. Apply seal strips (1.25-in. wide by 0.125-in. thick) to the roof drain channel as shown in Fig. 65.
7. Remove the roof end cap and rail screws. Attach the drain channel to the unit by matching the pre-punched 0.31-in. holes to the existing roof cap-roof rail holes. See Fig. 66.

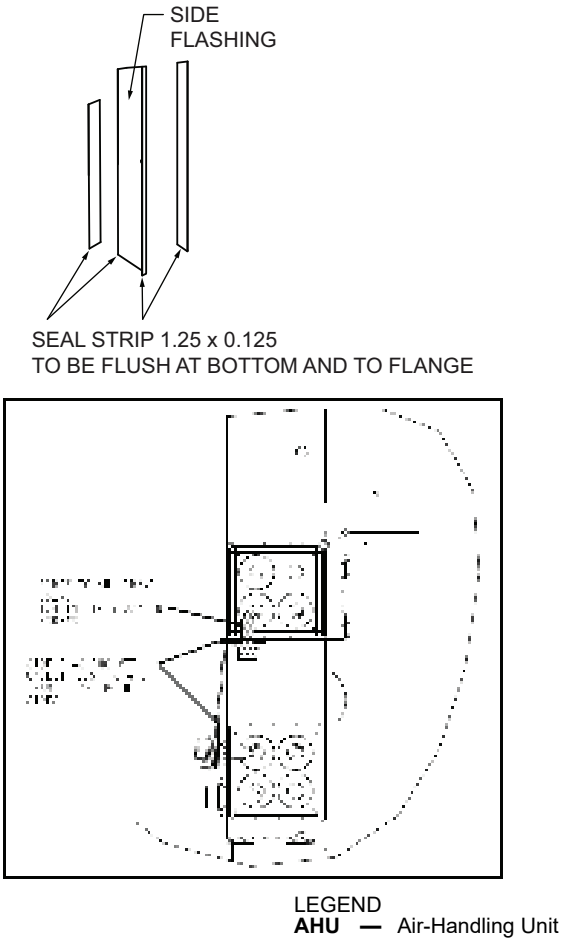

LEGEND
AHU — Air-Handling Unit

Fig. 64 — Screw the Side Flashings to Unit

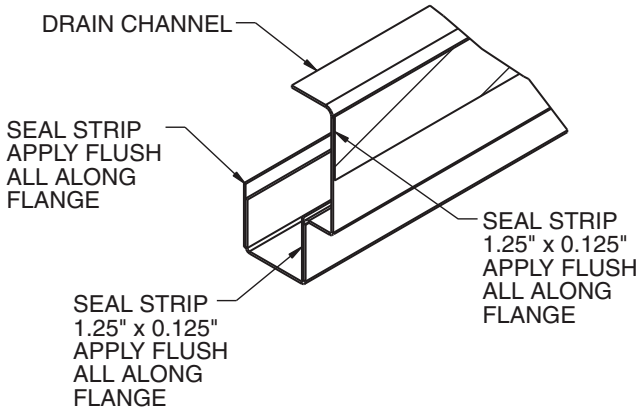

NOTE: Measurements are shown in inches.

Fig. 65 — Applying Seal Strip to Roof Drain Channel

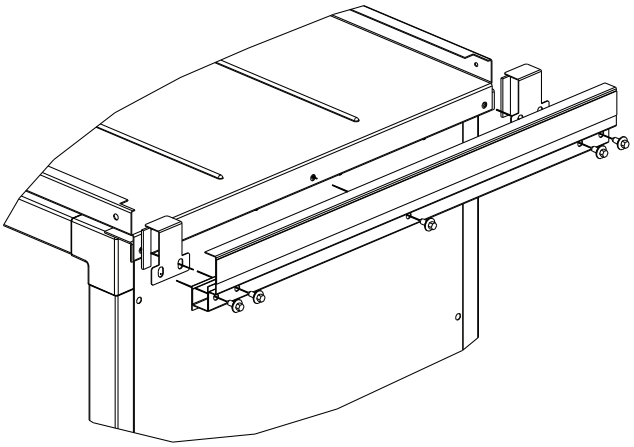

Fig. 66 — Install Drain Channel to Unit Roof

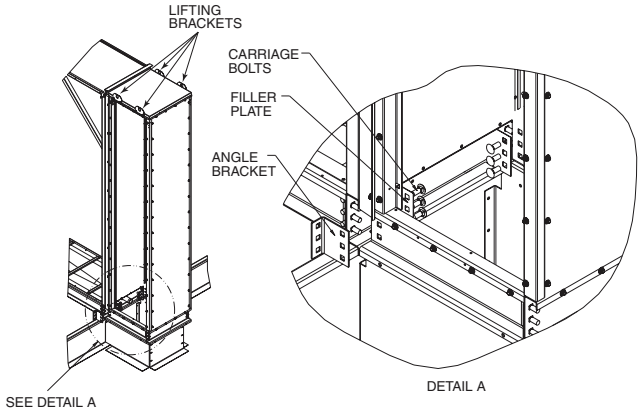

LEGEND
CCH — Coil Connection Housing

Fig. 67 — Positioning CCH

8. Remove the unit lifting lugs under the coil section that match the CCH side walls. DO NOT REMOVE THE LIFTING LUG BOLTS AS THEY WILL BE USED TO ATTACH THE ANGLE.
9. If the CCH has no door, remove the side panels before proceeding with the installation.
10. a. Using the lifting brackets (shown in Fig. 67), lift the CCH into the vertical position and remove the shipping brackets (shown in Fig. 61).
    b. Using the lifting brackets (shown in Fig. 67) place the CCH on top of the CCH curb. Once in position there should be about a 2-in. gap between the unit wall and the CCH frame covered by the flashing.
11. Attach the angle bracket using the lifting lug nuts and washers; do not fully tighten. DO NOT USE THIS PART FOR LIFTING THE UNIT. See Fig. 67, Detail A.
12. Place the filler plate inside the CCH baserail, align the square holes with the pattern on the base rail and the angle bracket, then insert the 3 carriage bolts provided through the plate, base rail and angle bracket. Fully tighten with provided washers and nuts. See Fig. 67, Detail A.
13. Finish tightening the angle bracket to the unit base rail. See Fig. 67, Detail A.
14. Screw cover top to drain channel. See Fig. 68.
15. Place the slider onto drain channel-CCH roof cap tabs. Bend or crimp both ends of slider to lock the part in place. See Fig. 69.
16. Reassemble panels.
17. Attach the side flashing to the CCH frame using 1/4 in. —14 x 3/4 in. long screws provided.
18. Caulk all notches and gaps as shown Fig. 70.

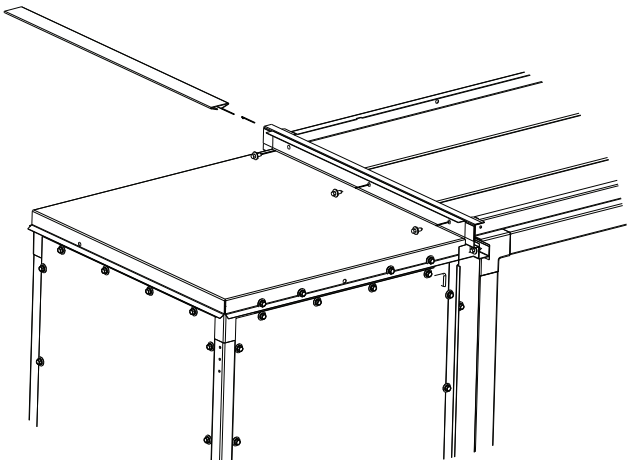

Fig. 68 — Screwing CCH Roof to Drain Channel

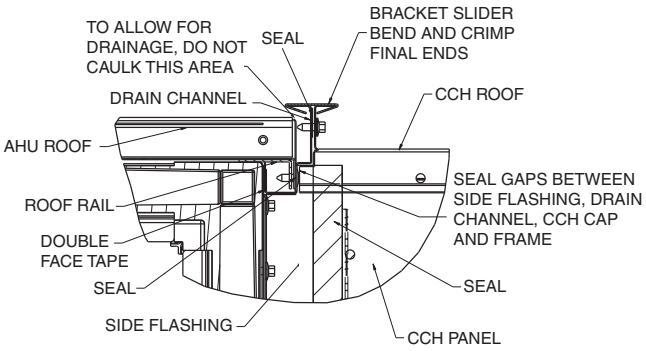

LEGEND
AHU — Air-Handling Unit
CCH — Coil Connection Housing

Fig. 69 — Side View

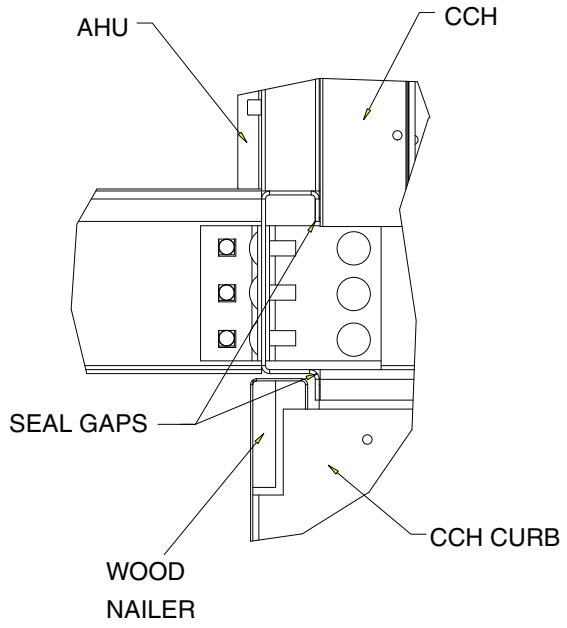

LEGEND
AHU — Air-Handling Unit
CCH — Coil Connection Housing

Fig. 70 — Sealing Gaps

Power Exhaust Hood Field Installation

A power exhaust hood is a selectable accessory in AHU Builder. It can be either factory or field installed. If "Field Installed" is ordered, follow the installation steps below.

1. Below is an exploded view of a power exhaust assembly with and without a damper. See Fig. 71 and 72.

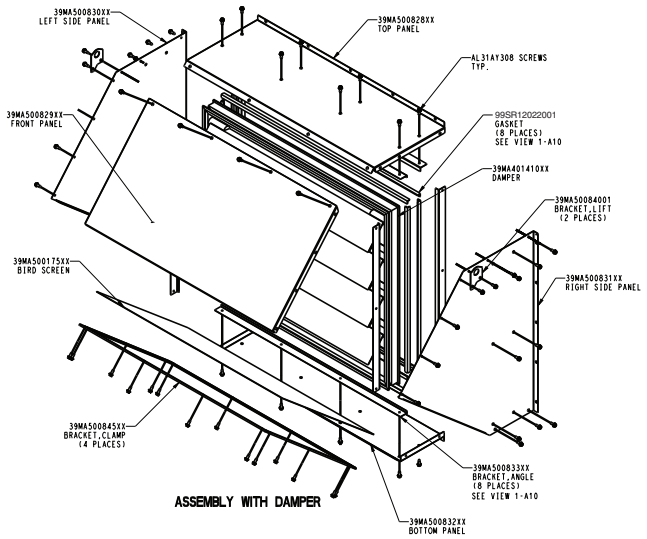

Fig. 71 — Exploded Power Exhaust Hood Assembly with Damper (Size 36 Shown)

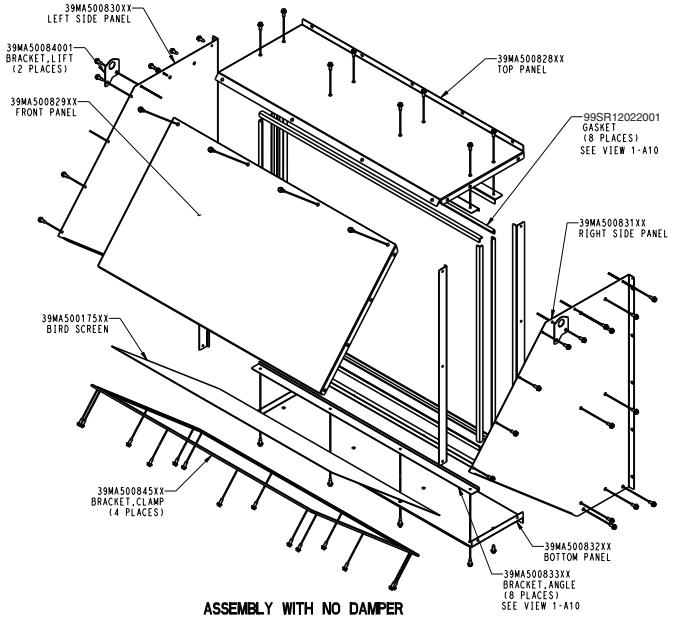

Fig. 72 — Exploded Power Exhaust Hood Assembly without Damper (Size 36 Shown)

2. The Power Exhaust hood and damper will be shipped in separate boxes in the return/exhaust fan section. See Fig. 73. Remove the steel strapping and remove the boxes from the return fan section.

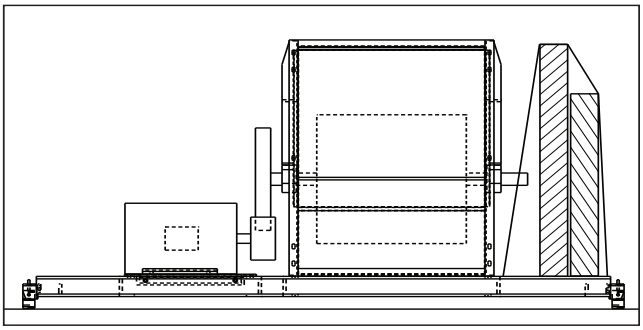

Fig. 73 — Example of Sizes 21-110 Shipping Box

3. Open each box. One will contain the hood parts. The other will contain the damper. See Fig. 74 and 75.

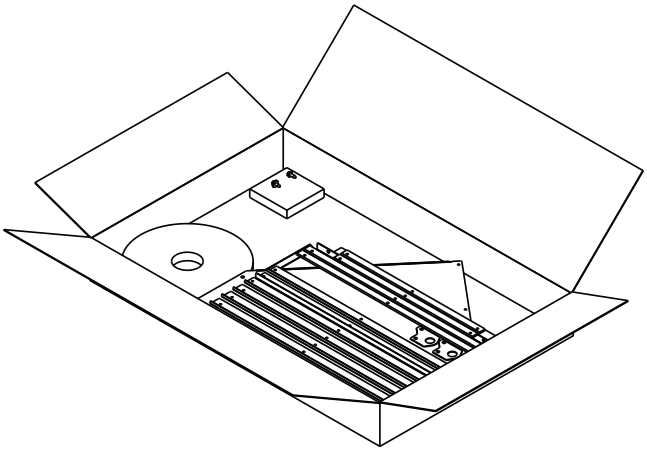

SHEET METAL KIT HOOD

Fig. 74 — Power Exhaust Hood Sheet Metal Kit

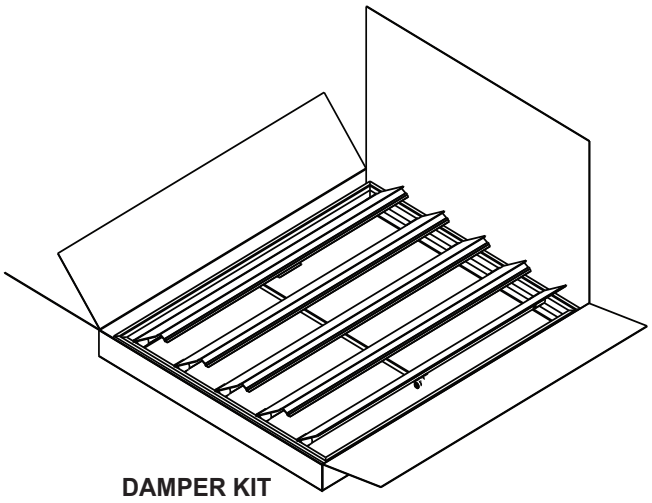

Fig. 75 — Power Exhaust Damper Kit

4. Inspect box contents for missing or damaged parts. If any parts are damaged or missing, contact your Carrier representative for assistance.
5. Install gasket flush to each panel flange (top, bottom and sides) as shown below. See Fig. 76.

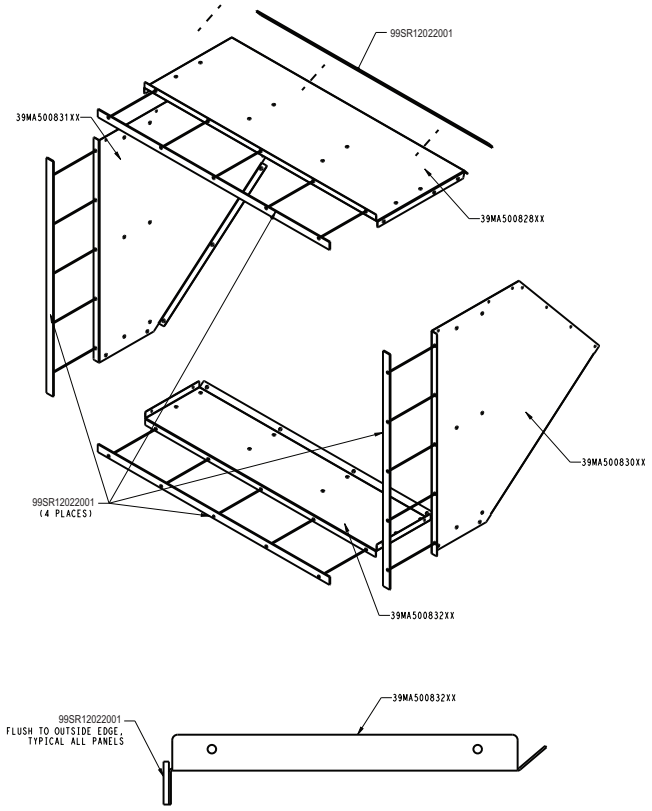

Fig. 76 — Installing the Gasket

6. If a damper was ordered, install the gasket on the entering and leaving side of the damper as shown. Note, apply the gasket on both sides of the corner (90 degrees) by bending the gasket. See Fig. 77.

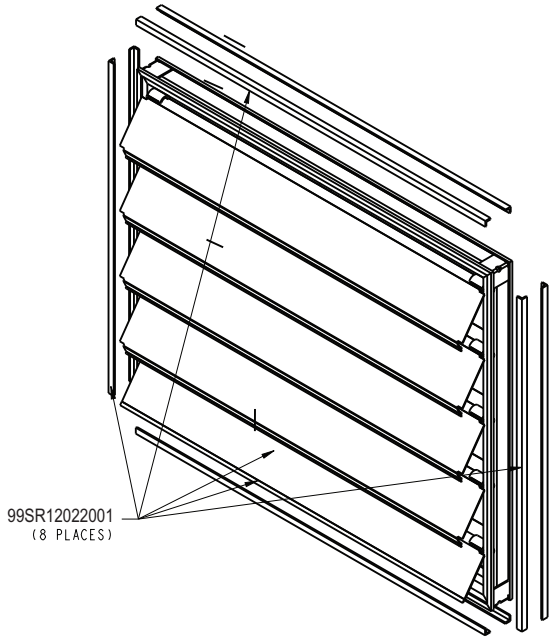

Fig. 77 — Installing the Gasket on the Damper

7. First, attach side panels to return/exhaust fan opening using the 1/4 in.-14 x 3/4 in. sheet metal screws (with neoprene washers.) Then attach bottom panel using similar sheet metal screws. See Fig. 78.

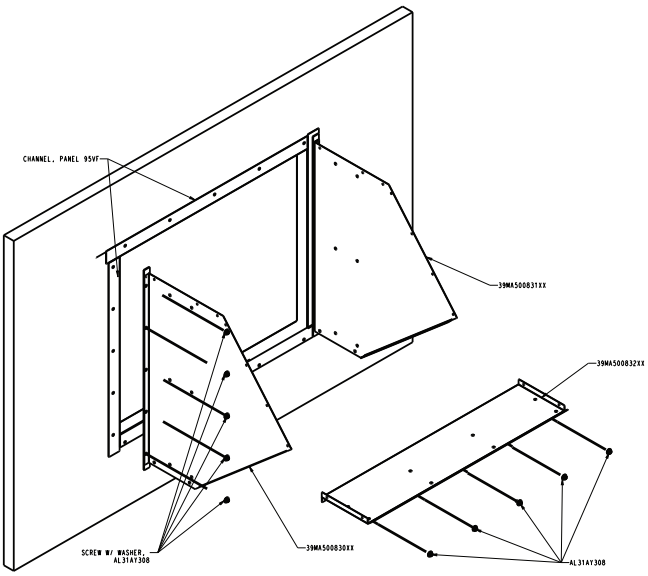

Fig. 78 — Attaching the Side Panels and Bottom Panel

8. After attaching bottom panel to unit, attach bottom panel to side panel using the 1/4 in.-14 x 5/8 in. long sheet metal screws (without neoprene washer). See Fig. 79.

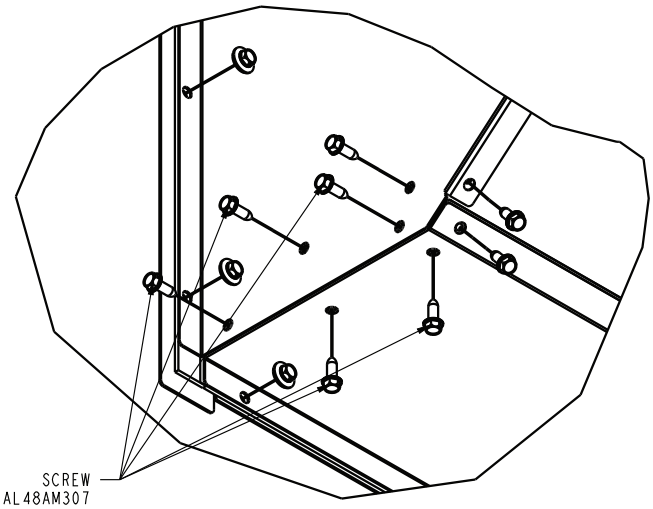

Fig. 79 — Securing the Bottom Panel

9. Mount the four brackets to the bird screen. See Fig. 80.

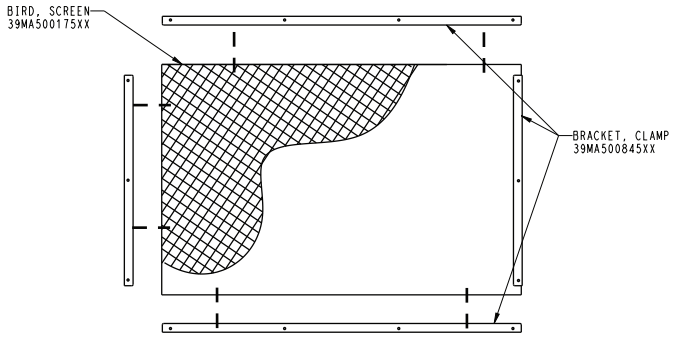

Fig. 80 — Mounting the Bird Screen

10. Attach inner angle brackets to side and bottom panels using the 1/4 in.-14 x 5/8 in. long sheet metal screws (without neoprene washer.) See Fig. 81.

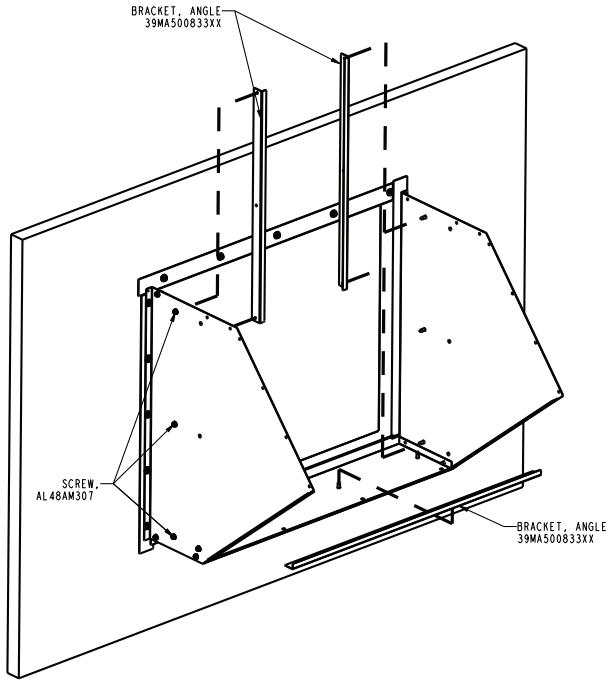

Fig. 81 — Attaching the Angle Brackets

11. Install damper (if ordered) as shown in the Fig. 82. Orient damper blades to open out (in the direction of exhaust air.) Attach the 3 outer angle brackets to secure the damper to the exhaust hood using the 1/4 in.-14 x 5/8 in. long sheet metal screws (without neoprene washer.) After installing the 3 outer brackets, make sure the damper moves freely.

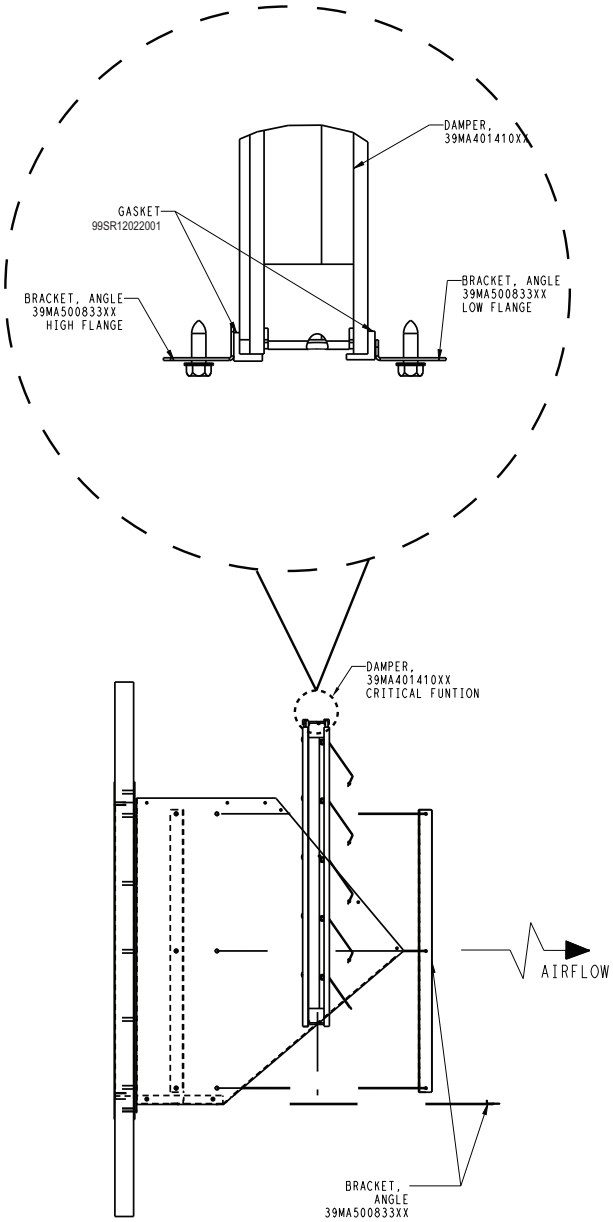

Fig. 82 — Installing the Damper

12. For size 61 units (AF361) and sizes 85, 96 and 110 (AF40 and FC40) install bracket spacer and damper brackets using the 1/4 in.-14 x 5/8 in. long sheet metal screws (without neoprene washer.) See Fig. 83.

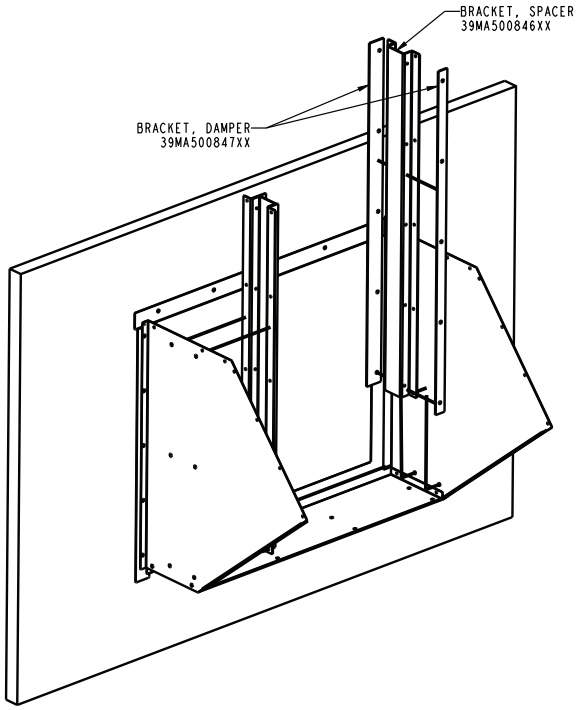

Fig. 83 — Installing the Bracket, Space, and Damper (Sizes 61, 85, 96, and 110)

13. Attach bird screen to the inside of the hood using the 1/4 in.-14 x 5/8 in. long sheet metal screws (without neoprene washer.) Also, attach brackets to top panel, then attach top panel to power exhaust assembly. See Fig. 84.

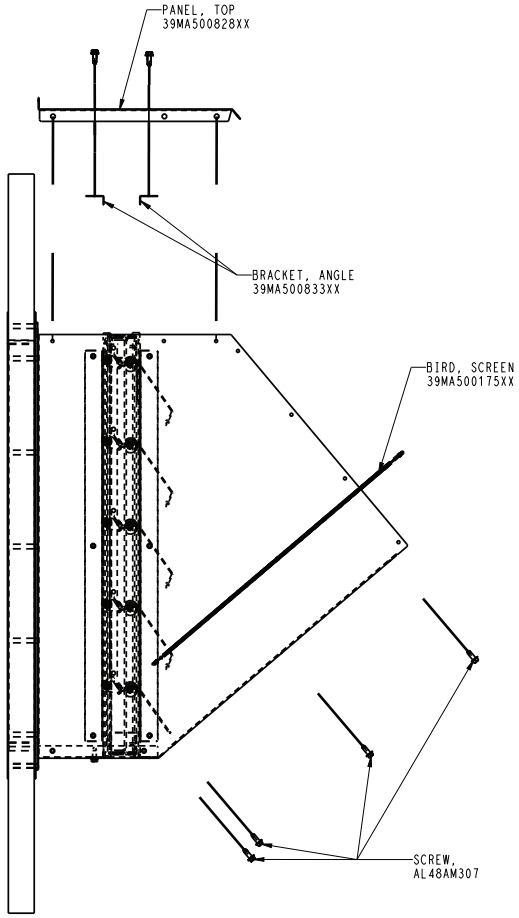

Fig. 84 — Attaching Bird Screen and Top Panel

14. Attach front panel to power exhaust assembly using the 1/4 in.-14 x 5/8 in. long sheet metal screws (without neoprene washer.) Also, attach the lifting brackets to each side of the top of the assembly using the 1/4 in.-14 x 5/8 in. long sheet metal screws (without neoprene washer.) See Fig. 85.

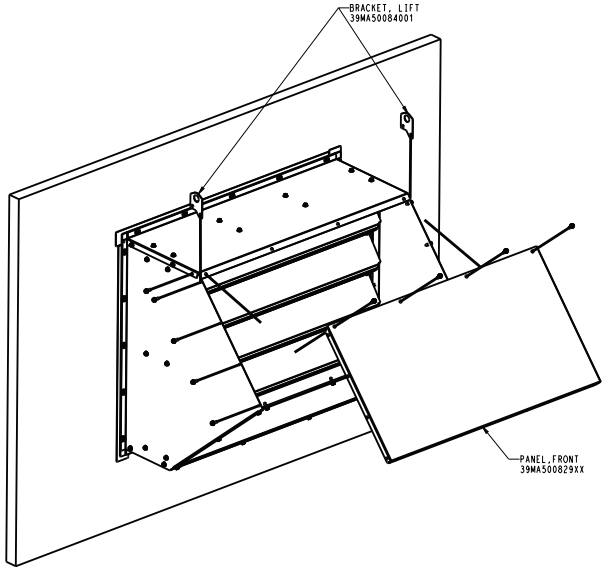

Fig. 85 — Attaching the Front Panel and Lifting Brackets

Humidifier Installation

ASSEMBLE CONTROL VALVE ASSEMBLY

Valve kits are sold as separate items through your local Carel representative (shipped unassembled). Figures 86 and 87 show the components in those kits.

Alternatively, control valves from any manufacturer may be used with the Carel humidifier. Valve size is selected by looking up the steam load and pressure values from the ***AHU*Builder®** program in a steam valve manufacturer's flow rate and pressure chart. Figures 86 and 87 can then be used as a guide to purchase the remainder of the components locally.

CAREL PART NUMBER	DESCRIPTION	COMPONENTS
SAKV000AU0	1/2-in. valve size Cv=0.4	(2) 1/2-in. MPT x 3-in. nipples (2) 1/2-in. FPT x 1-in. MPT hex bushings 1-in. union
SAKV000BU0	1/2-in. valve size Cv=0.63	
SAKV000CU0	1/2-in. valve sizes Cv=1	
SAKV000DU0	1/2-in. valve sizes Cv=1.6	
SAKV000EU0	1/2-in. valve sizes Cv=2.5	
SAKV000FU0	1/2-in. valve sizes Cv=4	
SAKV000GU0	3/4-in. valve size Cv=6.3	(2) 3/4-in. MPT x 3-in. nipples (2) 3/4-in. FPT x 1-in. MPT hex bushings 1-in. union
SAKV000HU0	1-in. valve size Cv=10	(2) 1 in. MPT x 3-in. nipples 1 in. union
SAKV000IU0	1-1/4-in. valve size Cv=16	(2) 1-1/4-in. MPT x 3-in. nipples (2) 1-1/4-in. FPT x 2-in. MPT hex bushings 2-in. union
SAKV000JU0	1-1/2-in. valve size Cv=25	
SAKV000KU0	2-in. valve size Cv=40	(2) 2-in. MPT x 3-in. nipples 2-in. union

LEGEND
Cv — Valve Flow Coefficient

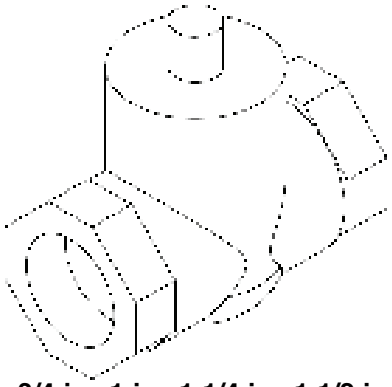

Fig. 86 — 1/2-in., 3/4-in., 1-in., 1-1/4-in., 1-1/2-in., and 2-in. Valves

CAREL PART NUMBER	PIPE SIZE (in.)	3-in. NIPPLE M-M (QTY — SZ, in.)	BUSHING F-M (QTY — SZ, in.)	UNION F-F (QTY — SZ, in.)
SAKR0*24U0	1/2	2 — 1	2 — 1/2 x 1	2 — 1
SAKR0*34U0	3/4	2 — 1	2 — 3/4 x 1	2 — 1
SAKR0*44U0	1	2 — 1	Not available	2 — 1
SAKR0*54U0	1-1/4	2 — 2	2 — 1-1/4 x 2	2 — 2
SAKR0*64U0	1-1/2	2 — 2	2 — 1-1/4 x 2	2 — 2
SAKR0*84U0	2	2 — 2	Not available	2 — 2

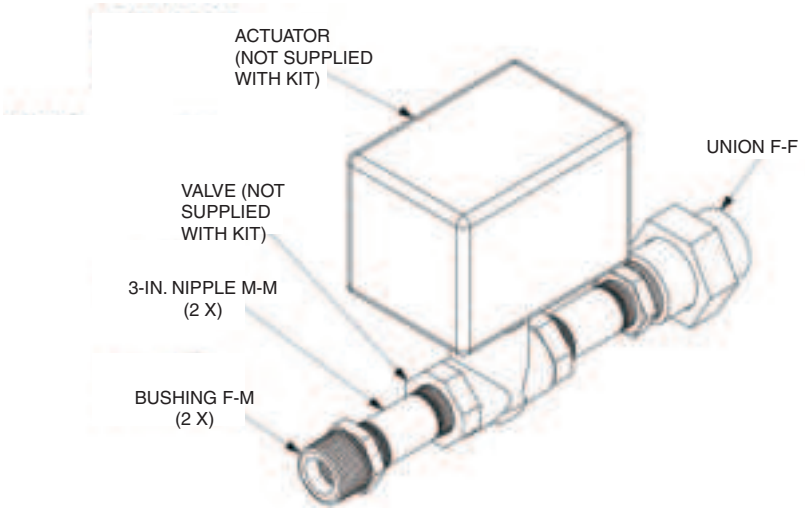

Fig. 87 — Valve Fitting Kits

ASSEMBLE STRAINER AND TRAP ASSEMBLY AND VALVE ASSEMBLY

Strainer and trap assemblies are sold as separate items through your local Carel representative (shipped unassembled). Figures 88-91 each show a detailed list of components in those kits. Table 31 lists Carel's available inlet trap strainer kits.

Alternatively, strainers and traps from any manufacturer may be used with the Carel humidifier. In this case, the trap size is based on the condensate connection size leaving the humidifier. Figures 88-91 can then be used as a guide to purchase the remainder of the components locally.

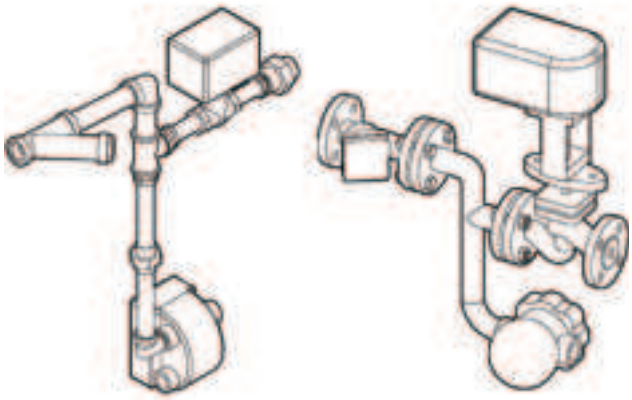

Fig. 88 — Examples of Pressurized Steam Systems

SAKT x x xx x 0
① ② ③ ④ ⑤ ⑥

LEGEND
1 - ID prefix
2 - Material: F = Iron
S = SS
3 - Type: S = Condensate separator
T = Trap and strainer assembly
4 - Size: 15 = DN 15 flange
20 = DN 20 flange
25 = DN 25 flange
32 = DN 32 flange
40 = DN 40 flange
44 = 1-in. pipe thread
50 = DN 50 flange
65 = DN 65 flange
84 = 2-in. pipe thread
5 - Region: U = North America
O = Other
6 - Not used

Fig. 89 — Carel Strainer Part Number Nomenclature

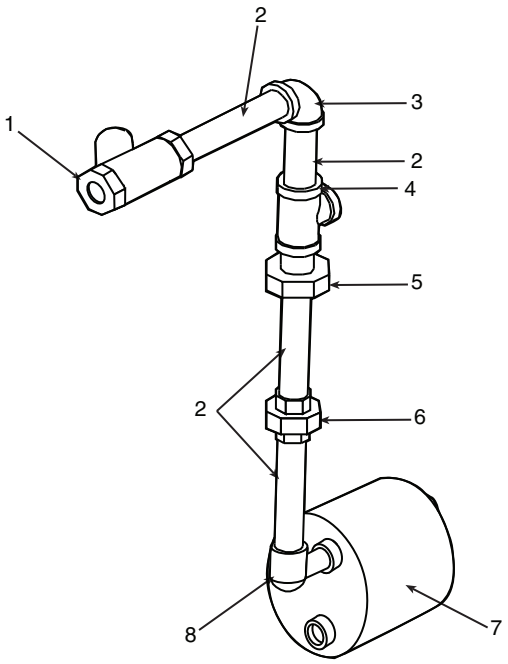

ITEM	DESCRIPTION	SAK*T44*0	SAK*T84*0
1	Y-type strainer	1 (1 in.)	1 (2 in.)
2	Nipple M-M (size)	2 (3/4 in. x 6 in.)	2 (3/4 in. x 6 in.)
		1 (1 in. x 3 in.)	1 (2 in. x 3 in.)
		1 (1 in. x 6 in.)	1 (2 in. x 6 in.)
3	Elbow F-F (size)	1 (1 in.)	1 (2 in.)
4	Tee F-F-F (size)	1 (1 in.)	1 (2 in.)
5	Bushing F-M (size)	1 (3/4 in. x 1 in.)	1 (3/4 in. x 2 in.)
6	Union F-F (size)	1 (3/4 in. x 3/4 in.)	1 (3/4 in. x 3/4 in.)
7	F & T trap	1 (3/4 in.)	1 (3/4 in.)
8	Elbow F-M (size)	1 (3/4 in.)	1 (3/4 in.)

Fig. 90 — Strainer Assembly Components

Table 31 — Carel Inlet Trap Strainer Kits

SIZE	MATERIAL, TYPE, REGION CODE		
	****FT**O*	****FT**U*	****ST**U*
SAKT**15*0	Flange DN 15	Not available	Not available
SAKT**20*0	Flange DN 20	Not available	Not available
SAKT**25*0	Flange DN 25	Not available	Not available
SAKT**32*0	Flange DN 32	Not available	Not available
SAKT**40*0	Flange DN 40	Not available	Not available
SAKT**44*0	Not available	1 in. NPT female	1 in. NPT female
SAKT**50*0	Flange DN 50	Not available	Not available
SAKT**65*0	Flange DN 65	Not available	Not available
SAKT**84*0	Not available	2 in. NPT female	2 in. NPT female

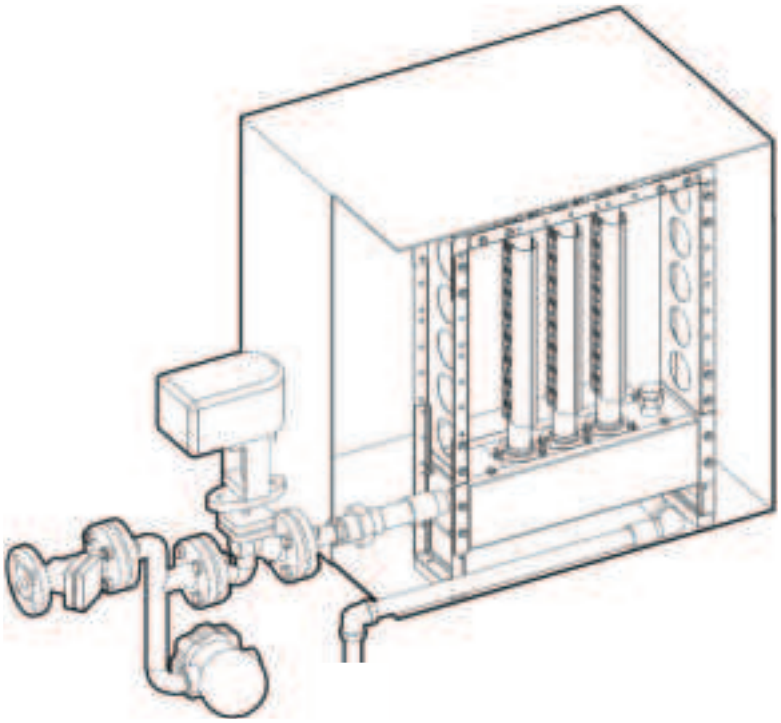

NOTE: Bottom feed humidifier shown with field-supplied and installed control valve. Sizes 03-14 are bottom fed. Sizes 17-61 are top feed.

Fig. 91 — Control Valve, Strainer and Trap Connected to Supply and Manifold of Humidifier

Assembly of Vertical Manifolds

The vertical distribution manifolds are inserted into the bottom feed header by hand (slip fit) and then into the top header if any. See Fig. 92.

- Vertical slotted discharge manifolds must be installed with the internal fishbone wick ends sloping up as in a "Y."
- Do not force the vertical manifolds into the headers beyond the insulation.
- Do not use any lubricants. Manually reform the ends slightly if necessary.
- Ensure discharge slots are perpendicular to the air flow.
- On top fed 17-61 sizes, run a bead of RTV silicone caulk around the junction of the vertical manifolds and top header.

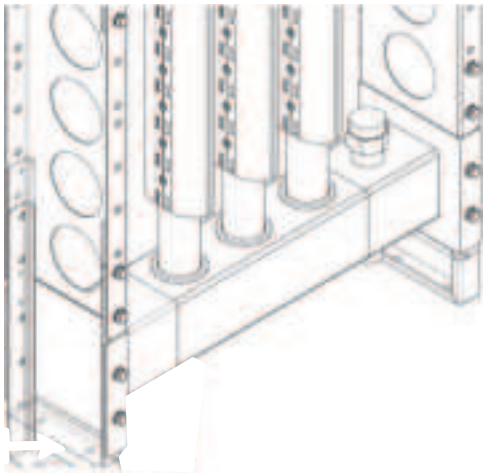

Fig. 92 — Vertical Manifold

Coil Installation

NOTE: If installing a replacement coil, refer to Coil Removal section on page 228 for instructions on removing existing coil.

INSTALLATION OF SINGLE HEIGHT COILS

(Medium Face Area Coils: sizes 03W to 30T and 36W, 40W, and 50W — Large Face Area Coils: sizes 03W to 14W and 17W, 21W, 25W, 30W, and 36W)

1. Lock open and tag all power supplies to unit fan motor and electric heaters if present.
2. Remove service panel/coil connection panel and the upstream service panel and set aside in a safe place.
3. a. Remove the flat corner plug from each end piece of the top rail.
   b. Extract the Torx[1] T25 screw visible within the exposed cavity. (Do not mix these screws with others; they are specific for this location. Set screws aside for re-installation of the top rail.)
   c. Remove the top rail by pulling out at a 45-degree angle. Set top rail aside.

⚠ CAUTION

Do not handle the coil by the headers or connection nipples, as irreparable damage might occur that is NOT covered by warranty. Protect the finned surface from damage during all handling and shipping.

4. Slip the foam sealing sleeves on the connection nipples before installing the coil.
5. The coil may now be hoisted in through the top opening, or it may be slid in through either side, taking care to avoid tipping

1. Third-party trademarks and logos are the property of their respective owners.

or dropping the coil. Some lower stacked unit sections may require slightly tipping the coil from the vertical position in order to clear the upper frame rail and seal, which is not readily removed.

6. Loosely secure the coil at the top using the 3/8-in. diameter hoisting holes located in the side channel/tube sheet juncture at each end.
7. Install the first coil in the section. Access the upstream face of the coil and install the screws holding the coil to the mounting baffles around the entire perimeter. This may require reaching through an opened damper assembly or through the filter track after filters are removed.
8. Replace the top rail by reinstalling the Torx T25 screws and flat corner plugs.
9. Replace all service panels.

INSTALLATION OF STACKED COILS

(Medium Face Area Coils: 35T, 37T, 42T, and 51T to 110W — Large Face Area Coils: 16T, 18T, 22T, 25T, 30T, 35T, and 37T to 110W)

IMPORTANT: The lengths of the coil supports and intermediate pans and channels are designed to work with Carrier coils. Substitution of other manufacturer's coils may require that custom mounting components be field fabricated. *Coil sections ordered without coils will come with the referenced parts in kit form.*

NOTE: The length that the intermediate drain pan extends downstream from the coil face has been designed for use with Carrier manufactured coils, and may prove insufficient for other makers' coils.

1. Lock open and tag all power supplies to unit fan motor and electric heaters if present.
2. Remove service panel/coil connection panel and the upstream service panel and set aside in a safe place.
3. a. Remove the flat corner plug from each end piece of the top rail.
   b. Extract the Torx T25 screw visible within the exposed cavity. (Do not mix these screws with others; they are specific for this location. Set screws aside for re-installation of the top rail.)
   c. Remove the top rail by pulling out at a 45-degree angle. Set top rail aside.

CAUTION

Do not handle the coil by the headers or connection nipples, as irreparable damage might occur that is NOT covered by warranty. Protect the finned surface from damage during all handling and shipping.

4. Slip the foam sealing sleeves on the connection nipples before installing the coil.
5. Before placing the coils inside the unit, apply the adhesive backed gasket to the lower baffle, spanning the entire unit, on the surface that will contact the coil (see Fig. 94).
6. a. Place the lower coil on the coil supports, sliding the coil against the upstream baffle and aligning the mounting holes so that the connection nipple will extend approximately 3 in. outside the unit casing.
   b. Place the heavy vertical angle (which is full height of the finished coil bank) along the upstream right and left side of the mounting baffles (see Fig. 94). Install screws through this angle first and then into the baffles, engaging the coil tube sheet mounting holes and securing the coil within the unit.
   c. Secure the lower side casing of the coil to the lower horizontal baffle, sandwiching the gasket in between.
7. For coil sections that do not have a drain pan within the section, go to Step 10.

   For 42T units and larger (both T and W units) with stacked coils, the upper drain pan will have a double slope with drains at either end. Secure the spacer (hot channel) to the top center of the lower coil casings. (See Fig. 84).

CAUTION

Do not penetrate through the coil casing into the fin pack. Tube damage may occur.

For units smaller than 42T (both T and W units) with stacked coils, the upper drain pan will have a single slope. Secure the spacer (hot channel) to the end of the lower coil casing. depending on which end the condensate will drain from.

NOTE: There will be an opening at either end of the pan for single slope drain pans (see Fig. 93).

8. For a double slope drain pan, secure two spacers (hat channels) to each end of the bottom of the upper coil casing before placing the coil in position (refer to Fig. 94). For single slope drain pan secure spacer (hat channel) to achieve the intended slope (left or right). See Fig. 95.
9. For single and double slope drain pans, place the intermediate condensate drain pan on the lower coil, centering the drain pan between the sides of the unit, with the condensate outlet holes along the downstream edge. (It may be helpful to temporarily secure the drain pan by a strip of double-stick tape on the center hat channel.)
10. Lift the upper coil (with spacer hat channels on the bottom of each end) into place, aligning the upper coil with the lower coil. When the upper coil is lowered into place, it will deflect the intermediate condensate pan downward on each end, providing for positive drainage.
11. Install factory-supplied screws around the ends and top of the coil.

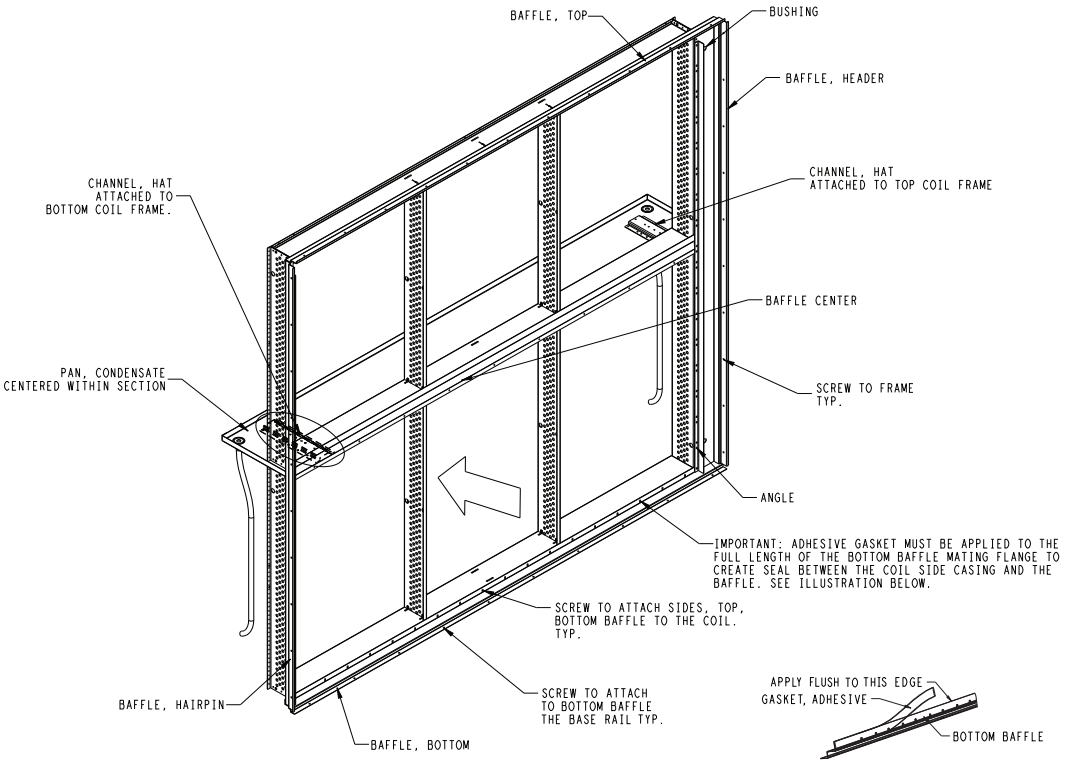

Fig. 93 — Single Slope Condensate Drain — Apply Gasket

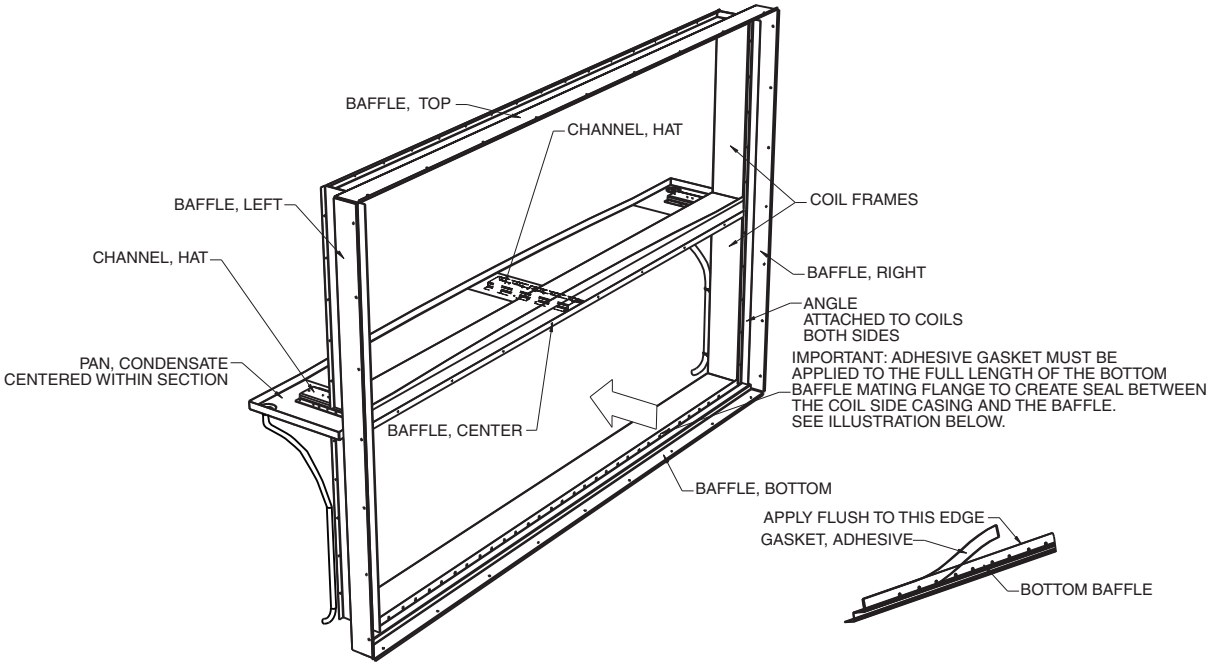

Fig. 94 — Double Slope Condensate Drain — Apply Gasket

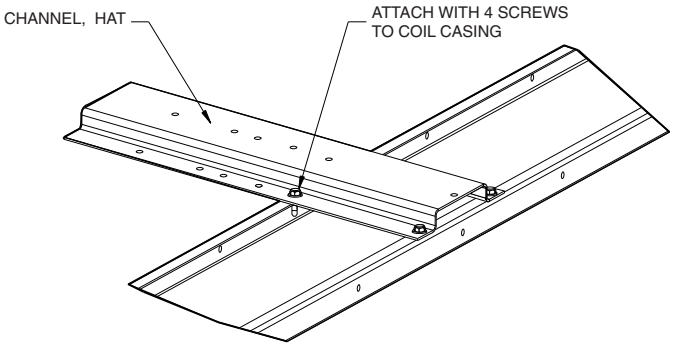

Fig. 95 — Secure Spacer

12. On the upstream side of the stacked coils, attach the center baffle (see Fig. 94), spanning the two coils with the crease in the baffle away from the coils, centering it between the side baffles, and aligning the baffle with the holes in the coil casings.
13. Install the drain fittings into the pan. Route and secure the hoses as shown in Fig. 96.
14. For sections that do not have a drain pan (heating only sections):
    a. After the lower coil has been secured in position, fasten the three hat channel spacer supports to the top of the coil.
    b. Place the upper coil into position directly above the lower coil, resting on these hat channels.
15. Secure the uppermost coil from the upstream side, so that the fastening screws provided pass through the vertical angle and the baffles and engage the coil casing. See Fig. 94.

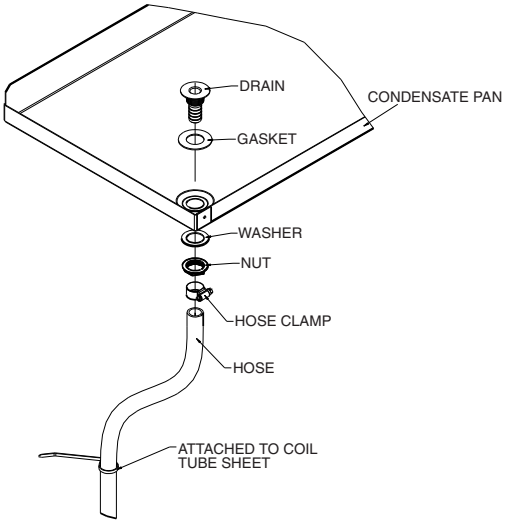

Fig. 96 — Install Drain Fittings

Water and Steam Coil Piping Recommendations

GENERAL

Use straps around the coil casing or the lifting holes (see Fig. 97) to lift and place the coil.

⚠ CAUTION

To prevent damage to the coil or coil headers: Do not use the headers to lift the coil. Support the piping and coil connections independently. Do not use the coil connections to support piping. When tightening coil connections, use a backup wrench on the nozzles.

NOTE: Verify that all vents and drains are capped or plugged before allowing water or steam flow through any coil. See Fig. 97.

Piping practices are outlined in the Carrier System Design Manual, Part 3, Piping Design.

WATER COILS

Typically, coils are piped by connecting the supply at the bottom and the return at the top. See Fig. 97. This is not always the case, especially if the coil hand has been changed in the field. Coils must be piped for counterflow; otherwise, a capacity reduction of 5% for each coil row will result. To ensure counterflow, chilled water coils are piped so that the coldest water meets the coldest air. Hot water coils are piped so that the warmest water meets the warmest air.

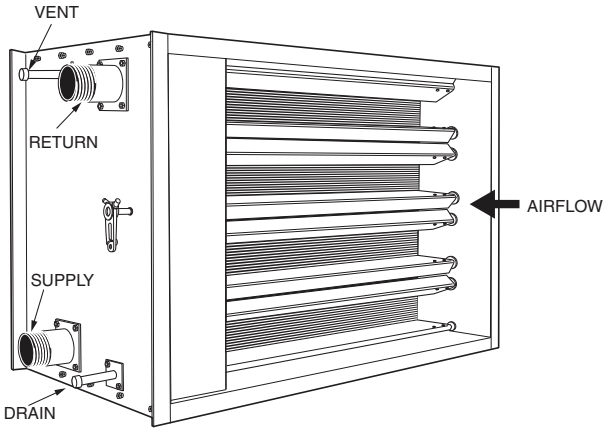

INTEGRAL FACE AND BYPASS COIL SHOWN

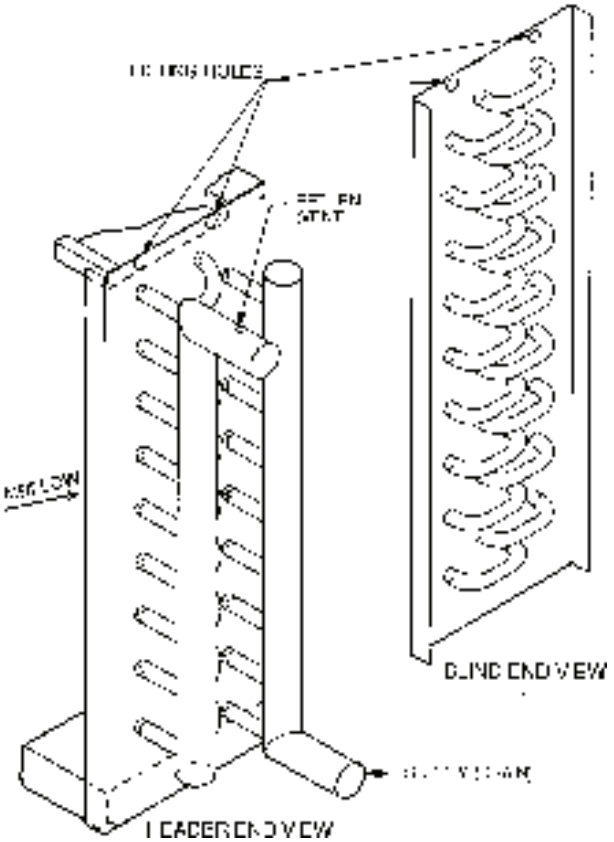

1/2 IN. WATER COIL SHOWN

Fig. 97 — Coil Connections and Lifting Points

STEAM COILS

Position the steam supply connection at the top of the coil, and the return (condensate) connection at the bottom. The coil tubes must incline downwards toward the return header connection for condensate drainage. See Fig. 98-102.

Figure 98 illustrates the normal piping components and the suggested locations for high, medium, or low-pressure steam coils. The low-pressure application (zero to 15 psig) can dispense with the 1/4-in. petcock for continuous venting located above the vacuum breaker (check valve).

Note the horizontal location of the 15-degree check valve, and the orientation of the gate/pivot. This valve is intended to relieve any vacuum forming in the condensate outlet of a condensing steam coil, and to seal this port when steam pressure is again supplied to the coil. It must not be installed in any other position, and should not be used in the supply line.

For coils used in tempering service, or to preheat outside air, install an immersion thermostat in the condensate line ahead of the trap. This will shut down the supply fan and close the outdoor damper whenever the condensate falls to a predetermined point, perhaps 120°F.

NOTE: Do NOT use an immersion thermostat to override a duct thermostat and open the steam supply valve.

For vacuum return systems, the vacuum breaking check valve would be piped into the condensate line between the trap and the gate valve instead of open to the atmosphere.

Figure 99 illustrates the typical piping at the end of every steam supply main. Omitting this causes many field problems and failed coils.

Figure 100 shows the typical field piping of multiple coils. Use this only if the coils are the same size and have the same pressure drop. If this is not the case, an individual trap must be provided for each coil.

Figure 101 shows a multiple coil arrangement applied to a gravity return, including the open air relief to the atmosphere, which DOES NOT replace the vacuum breakers.

Figure 102 illustrates the basic condensate lift piping.

Following the piping diagrams in Fig. 98-102, make all connections while observing the following precautions:

- Install a drip line and trap on the pressure side of the inlet control valve. Connect the drip line to the return line downstream of the return line trap.
- To prevent scale or foreign matter from entering the control valve and coil, install a 3/32-in. mesh strainer in the steam supply line upstream from the control valve.
- Provide air vents for the coils to eliminate noncondensable gases.
- Select a control valve according to the steam load, not the coils supply connection size. Do not use an oversized control valve.
- Do not use bushings that reduce the size of the header return connection. The return connection should be the same size as the return line and reduced only at the downstream trap.
- To lift condensate above the coil return line into overhead steam mains, or pressurized mains, install a pump and receiver between the condensate trap and the pressurized main. Do not try to lift condensate with modulating or on-and-off steam control valves. Use only 15-degree check valves, as they open with a lower water head. Do not use 45-degree or vertical-lift check valves.
- Use float and thermostatic traps. Select the trap size according to the pressure difference between the steam supply main and the return main.
- Load variations can be caused by uneven inlet air distribution or temperature stratification.
- Drain condensate out of coils completely at the end of the heating season to prevent the formation of acid.

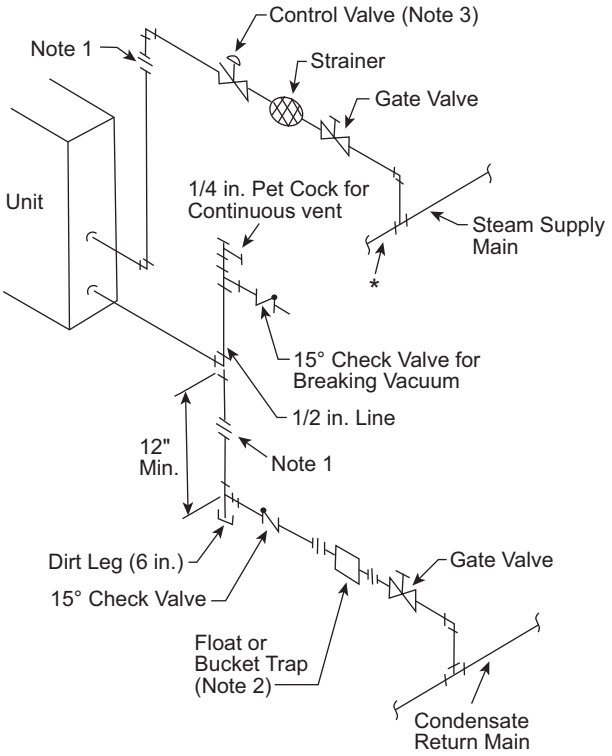

* When end of supply main, see Fig. 99.

NOTES:
1. Flange or union is located to facilitate coil removal.
2. Flash trap may be used if pressure differential between steam and condensate return exceeds 5 psi.
3. When a bypass with control is required.
4. Dirt leg may be replaced with a strainer. If so, tee on drop can be replaced by a reducing ell.
5. The petcock is not necessary with a bucket trap or any trap which has provision for passing air. The great majority of high or medium pressure returns end in hot wells or deaerators which vent the air.

Fig. 98 — Low, Medium or High Pressure Coil Piping

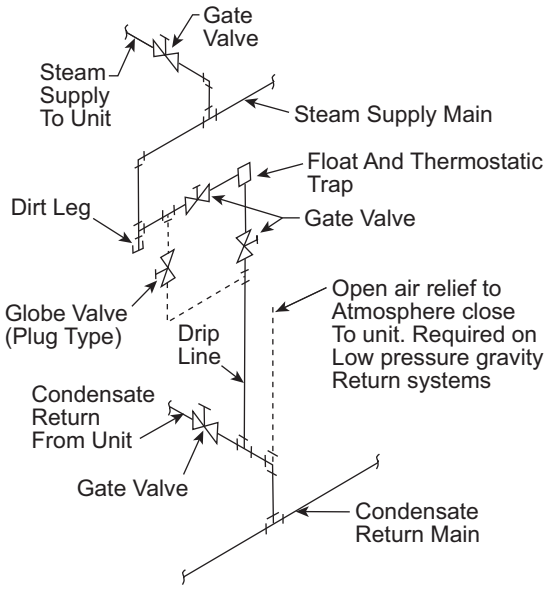

NOTES:
1. A bypass is necessary around trap and valves when continuous operation is necessary.
2. Bypass to be the same size as trap orifice but never less than 1/2 inch.

Fig. 99 — Dripping Steam Supply to Condensate Return

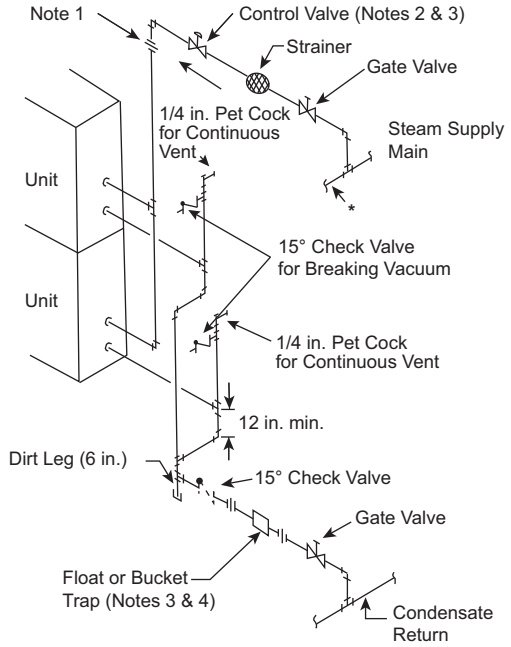

* Refer to Fig. 99 when dripping steam supply main to condensate return.

NOTES:
1. Flange or union is located to facilitate coil removal.
2. When a bypass with control is required.
3. Flash trap can be used if pressure differential between supply and condensate return exceeds 5 psi.
4. *Coils with different pressure drops require individual traps. This is often caused by varying air velocities across the coil bank.*
5. Dirt leg may be replaced with a strainer. If so, tee on drop can be replaced by a reducing ell.
6. The petcock is not necessary with a bucket trap or any trap which has provision for passing air. The great majority of high pressure return mains terminate in hot wells or deaerators which vent the air.

Fig. 100 — Multiple Coil High Pressure Piping

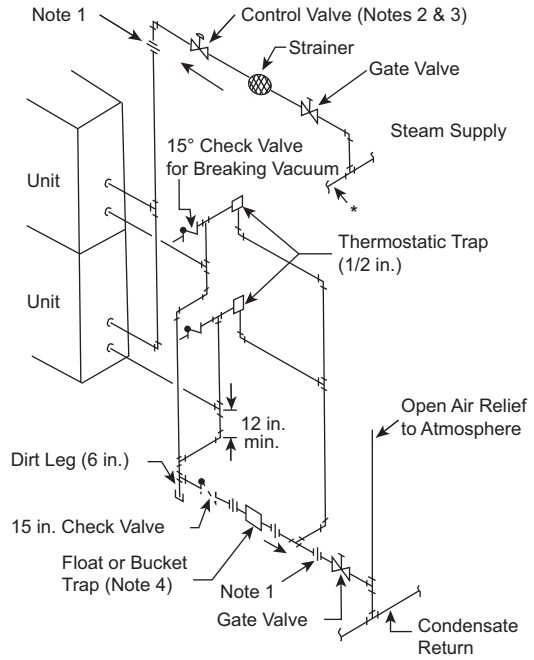

* Refer to Fig. 99 when dripping supply to return.

NOTES:
1. Flange or union is located to facilitate coil removal.
2. When control valve is omitted on multiple coils in parallel air flow.
3. When a bypass with control is required.
4. *Coils with different pressure drops require individual traps. This is often caused by varying air velocities across the coil bank.*

Fig. 101 — Multiple Coil Low Pressure Piping Gravity Return

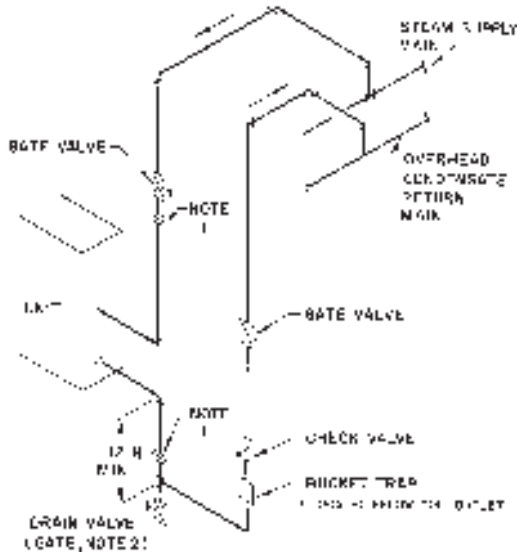

NOTES:
1. Flange or union is located to facilitate coil removal.
2. To prevent water hammer, drain coil before admitting steam.
3. Do not exceed one foot of lift between trap discharge and return main for each pound of pressure differential.
4. *Do not use this arrangement for units handling outside air.*

Fig. 102 — Condensate Lift to Overhead Return

Coil Freeze-Up Protection

WATER COILS

If a chilled water coil is applied with outside air, provisions must be made to prevent coil freeze-up. Install a coil freeze-up thermostat to shut down the system if any air temperature below 36°F is encountered entering the water coil. Follow thermostat manufacturer's instructions.

When a water coil is applied downstream of a direct-expansion (DX) coil, a freeze-up thermostat must be installed between the DX and water coil and electrically interlocked to turn off the cooling to prevent freeze-up of the water coil.

For outdoor-air application where intermittent chilled water coil operation is possible, one of the following steps should be taken:

- Install an auxiliary blower heater in cabinet to maintain above-freezing temperature around coil while unit is shut down.
- Drain coils and fill with an ethylene glycol solution suitable for the expected cold weather operation. Shut down the system and drain coils. See Service section, Winter Shutdown, page 227.

STEAM COILS

When used for preheating outdoor air in pressure or vacuum systems, an immersion thermostat to control outdoor-air damper and fan motor is recommended. This control is actuated when steam supply fails or condensate temperature drops below an established level, such as 120 to 150°F. A vacuum breaker should also be used to equalize coil pressure with the atmosphere when steam supply throttles close. Steam should not be modulated when outdoor air is below 40°F.

On low-pressure and vacuum steam-heating systems, the thermostat may be replaced by a condensate drain with a thermal element. This element opens and drains the coil when condensate temperature drops below 165°F. Note that condensate drains are limited to 5 psig pressure.

INNER DISTRIBUTING TUBE STEAM COILS

The inner distributing tube (IDT) steam coil used in the Carrier 39M air-handling units has an inner tube pierced to facilitate the distribution of the steam along the tube's length. The outer tubes are expanded into plate fins. The completed assembly includes the supply and condensate header and side casings which are built to slant the fin/tube bundle back toward the condensate header. The slanting of the assembly ensures that condensate will flow toward the drains. This condensate must be removed through the return piping to prevent premature failure of the coil. The fin/tube bundle is slanted vertically for horizontal airflow coils, and horizontally for vertical airflow coils.

IDT Steam Coil Piping

The following piping guidelines will contribute to efficient coil operation and long coil life:

1. Use full size coil outlets and return piping to the steam trap. Do not bush return outlet to the coil. Run full size to the trap, reduce at the trap.
2. Use float and thermostatic (F & T) traps only for condensate removal. Trap size selection should be based on the difference in pressure between the steam supply main and the condensate return main. It is good practice to select a trap with 3 times the condensate rating of the coil to which it is connected.
3. Use thermostatic traps for venting only.
4. Use only 1/2-in., 15-degree swing check valves installed horizontally, piped open to atmosphere, and located at least 12 in. above the condensate outlet. Do not use 45-degree, vertical lift and ring check valves.
5. The supply valve must be sized for the maximum anticipated steam load.
6. Do not drip steam mains into coil sections. Drip them on the pressure side of the control valve and trap them into the return main beyond the trap for the coil.
7. Do not use a single trap for two or more coils installed in series. Where two or more coils are installed in a single bank, in parallel, the use of a single trap is permissible, but only if the load on each coil is equal. Where loads in the same coil bank vary, best practice is to use a separate trap for each coil.

   Variation in load on different coils in the same bank may be caused by several factors. Two of the most common are uneven airflow distribution across the coil and stratification of inlet air across the coil.
8. Do not try to lift condensate above the coil return into an overhead main, or drain into a main under pressure with a modulating or on/off steam control valves. A pump and receiver should be installed between the coil condensate traps and overhead mains and return mains under pressure.
9. Use a strainer (3/32 in. mesh) on the steam supply side, as shown in the piping diagrams, to avoid collection of scale or other foreign matter in the inner tube distributing orifices.

NOTE: The IDT coils must be installed with the tubes draining toward the header end of the coil. Carrier's IDT steam coils are pitched toward the header end as installed in the unit.

10. Ensure the AHU is installed level to maintain the inherent slope. Also ensure the unit is installed high enough to allow the piping to be installed correctly, especially the traps which require long drip legs.
11. Do not fail to provide all coils with the proper air vents to eliminate noncondensable gases.
12. Do not support steam piping from the coil units. Both mains and coil sections should be supported separately.

IDT Steam Coil Installation

Refer to drawings to position the coils properly with regard to the location of the supply and return connections. Ensure that the IDT coil is pitched with the tubes draining toward the header. Carrier's AHUs provide proper coil pitch when the AHU is installed level.

Refer to schematic piping diagrams and piping connection notes for the recommended piping methods.

Refrigerant Piping, Direct-Expansion Coils

Direct-expansion (DX) coils are divided into 2 or 4 splits depending upon the unit size and coil circuiting. Each split requires its own distributor nozzle, expansion valve, and suction piping. Suction connections are on the air entering side when the coil is properly installed. Matching distributor connections for each coil split are on the air leaving side. See unit label or certified drawing to assure connection to matching suction and liquid connections.

NOTE: Distributor nozzles are factory selected and installed for adequate performance in many unit applications. For best performance, use Carrier's ***AHU*Builder®** program to select nozzle sizes for each unit and replace the factory-installed nozzles as required. See the Distributor Nozzle Change-Out section on page 136 for further details.

⚠ CAUTION

To prevent damage to the coil or coil headers: Do not use the headers to lift the coil. Support the piping and coil connections independently. Do not use the coil connections to support piping. When tightening coil connections, use a backup wrench on the stub outs.

⚠ CAUTION

Direct-expansion coils are shipped pressurized with dry air. Release pressure from each coil split through valves in protective caps before removing caps.

Do not leave piping open to the atmosphere unnecessarily. Water and water vapor are detrimental to the refrigerant system. Until the piping is complete, recap the system and charge with nitrogen at the end of each workday. Clean all piping connections before soldering joints.

SUCTION PIPING

Connect suction piping as shown in Fig. 103 for face split coil or Fig. 104 for row split coil.

NOTE: The lower split of face split coils should be *first-on, last-off*. Row split coils utilize special intertwined circuits; either split of these row split coils can be *first-on, last-off*.

Suction line from coil connection to end of the 15-diameter-long riser should be same tube size as coil connection to ensure proper refrigerant velocity.

Refer to Carrier System Design Manual, Part 3, and size remaining suction line to compressor for a pressure drop equivalent to 2.0°F. This will provide a total suction line header pressure drop equivalent to approximately 2.7°F.

To minimize the possibility of flooded starts and compressor damage during prolonged light load operation, an accumulator can be used in the suction line of *first-on, last-off* circuit.

The *first-on, last-off* circuits shown in Fig. 103 and 104 assume a single condensing unit. Note that in both figures the last-on, first-off circuit is looped above the common return line to prevent oil entrapment in the non-operating coil at partial load.

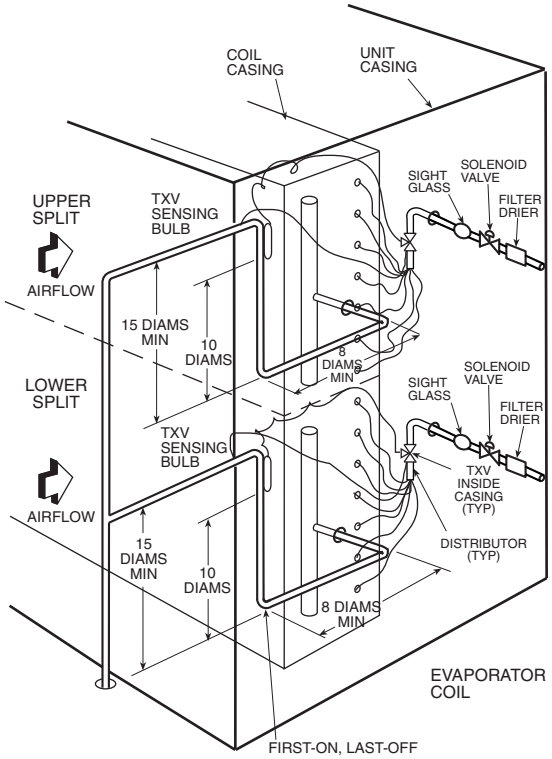

LEGEND

TXV — Thermostatic Expansion Valve

Fig. 103 — Face Split Coil Suction-Line Piping

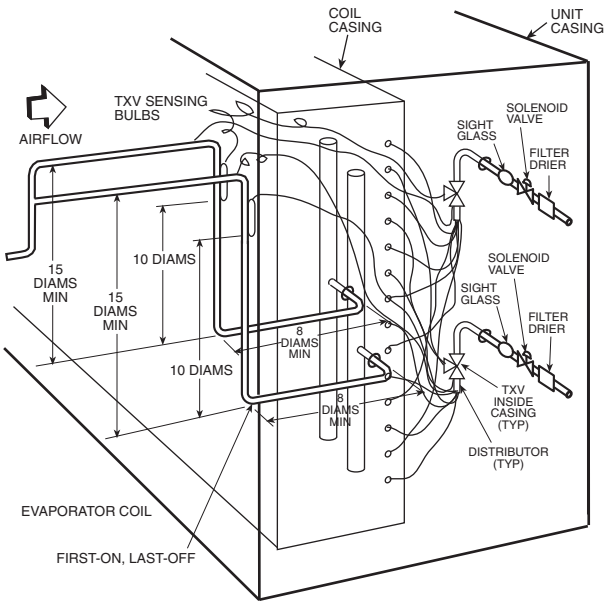

LEGEND

TXV — Thermostatic Expansion Valve

Fig. 104 — Row Split Coil Suction-Line Piping

Distributor Nozzle Change-Out

Distributor nozzles are factory supplied. Thermostatic expansion valves (TXVs) are either field or factory supplied. Be sure that correct nozzle is installed in each distributor before installing expansion valve. See Table 11 for factory-installed distributor nozzle sizes. Use ***AHU*Builder®** program to select nozzles for best performance; replacement nozzles must be field-installed. The correct nozzle is typically factory-installed.

⚠ CAUTION

Do not overheat distributor or cap. Failure to comply could result in equipment damage.

Perform nozzle change-out procedure as follows:

1. Remove plastic end cap by using an electric heat gun or a torch (see Fig. 105).
2. Clean off any grime.
3. Remove nozzle retaining ring with screwdriver or needle nosed pliers.
4. Remove nozzle from distributor by inserting 2 no. 6-32 threaded rods (at least 4 in. long) into the threaded holes provided in the nozzle. See Fig. 106.
5. Insert correct nozzle into distributor body.
6. Re-insert nozzle retainer ring into distributor.

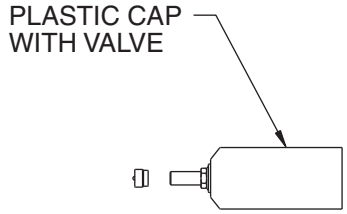

Fig. 105 — Distributor and Cap

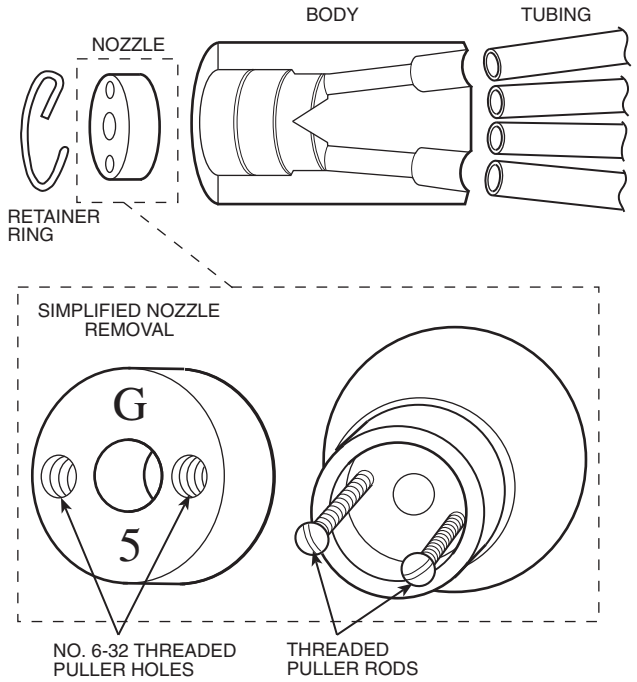

Fig. 106 — Nozzle Change-Out

Filter Drier

A filter drier should be installed before the TXV to ensure satisfactory valve operation.

TXV (Thermostatic Expansion Valve)

TXV LOCATION

Thermostatic expansion valves may be mounted in any position, but they should be installed as close to the evaporator as possible. If a refrigerant distributor is used with the TXV, best performance is obtained if the distributor is mounted directly to the valve outlet. If the distributor cannot be mounted directly to the valve outlet, the distance between the valve outlet and distributor should not exceed 24 in. or refrigerant distribution problems may occur. Also, the tube connecting the valve outlet and distributor can be sized smaller to maintain refrigerant velocity and better distribution. Elbows located between the expansion valve and distributor will hinder proper distribution and are, therefore, not recommended.

IMPORTANT: There are no liquid line penetrations through the casings from the factory. Best distribution is usually obtained if the expansion valve feeds vertically up or down into the distributor. Assemble the refrigerant piping and specialties inside the cabinet to determine the hole location prior to using a hole saw to penetrate the cabinet.

While not always convenient or possible, valve Types BI, F, FB, and O are easier to service if mounted in a vertical and upright position. If mounted in a horizontal position, the internal parts must be carefully reassembled to prevent damage. Some consideration should also be taken in mounting larger sized expansion valves. They must be adequately supported since system vibration and the weight of the valve can cause valve connections to fracture.

SOLDER TECHNIQUES

It is not necessary to disassemble solder type valves when soldering to the connecting lines. Any of the commonly used types of solders, e.g., 95-5, Sil-Fos, Easy-Flo, Phos-Copper, Stay Brite 8 or equivalents, may be used for copper-to-copper connections. When soldering a brass refrigerant distributor to the valve, appropriate solders for these connections, such as 95-5, Easy-Flo, Stay Brite 8 or equivalents must be used. Regardless of the solder used, it is important to direct the flame away from the valve body and avoid excessive heat on the diaphragm. See Fig. 107 for details. As an extra precaution, a wet cloth should be wrapped around the body and element during the soldering operation.

NOTE: This precaution will prevent overheating the valve body which could damage the superheat spring and result in flood-back problems. In addition, the Type O, EBF/SBF, and EBS valves contain synthetic parts which can be damaged due to overheating, resulting in poor valve performance.

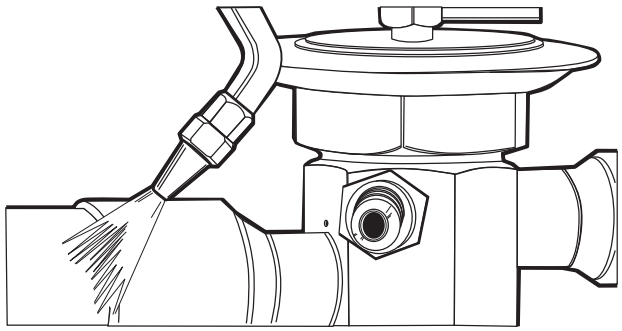

Fig. 107 — Solder Technique

TXV BULB LOCATION AND INSTALLATION

The location and installation of the bulb is extremely important to the proper performance of the system. Therefore, care should be taken with its final location. Laboratory testing has shown that better sensing can be achieved with the sensing bulb mounted on a vertical riser. However, with proper piping practices, horizontal mounting will also provide adequate sensing. When the horizontal mounting location is used, the suction line must drop below the coil suction outlet, as shown in Fig. 108. This line is pitched slightly downward, and when a vertical riser follows, a short trap is placed immediately ahead of the vertical line. See Fig. 108. The trap will collect any liquid refrigerant or oil passing through the suction line and prevent it from influencing the bulb temperature.

Steps for using a vertical riser as shown in Fig. 108 are:

1. A minimum of two 90-degree elbows must be installed upstream of the expansion bulb location. A distance of 8 pipe diameters between the elbows is desirable.
2. The thermal bulb must be strapped to a vertical riser following the second elbow of item 1. This riser must be at least 15 pipe diameters high and the bulb should be fastened 10 pipe diameters above the preceding elbow.
3. Size the suction line from near the evaporator through the 15 pipe diameter long riser for high velocity. It is recommended that the suction pipe sizing charts in the Refrigerant Reference Manual be used, entering at corrected design tons (each evaporator split) and 80 feet equivalent length (for 2°F loss). The chart point usually falls between 2 sizes; choose the smaller size pipe. Since the selection of suction piping recommended for high velocity is approximately 20 feet equivalent length, this sizing method will result in about 0.5°F friction loss for that section. If the commonly selected 2°F loss is allowed for the entire suction line, this leaves 1.5°F for the balance of the suction line and it should be sized on that basis. Usually, this high velocity sizing will be adequate for oil return up the 15 diameter long riser, though it should be checked.

The purpose of these recommendations is to achieve good mixing of the refrigerant leaving the evaporator suction header for proper sensing by the TXV bulb. Tests have confirmed that this, in addition to the vertical riser bulb location, results in significantly better superheat control over a broader load range.

Figures provided in the Carrier Refrigerant Reference Manual illustrate these recommendations for various coil splits and compressor configurations.

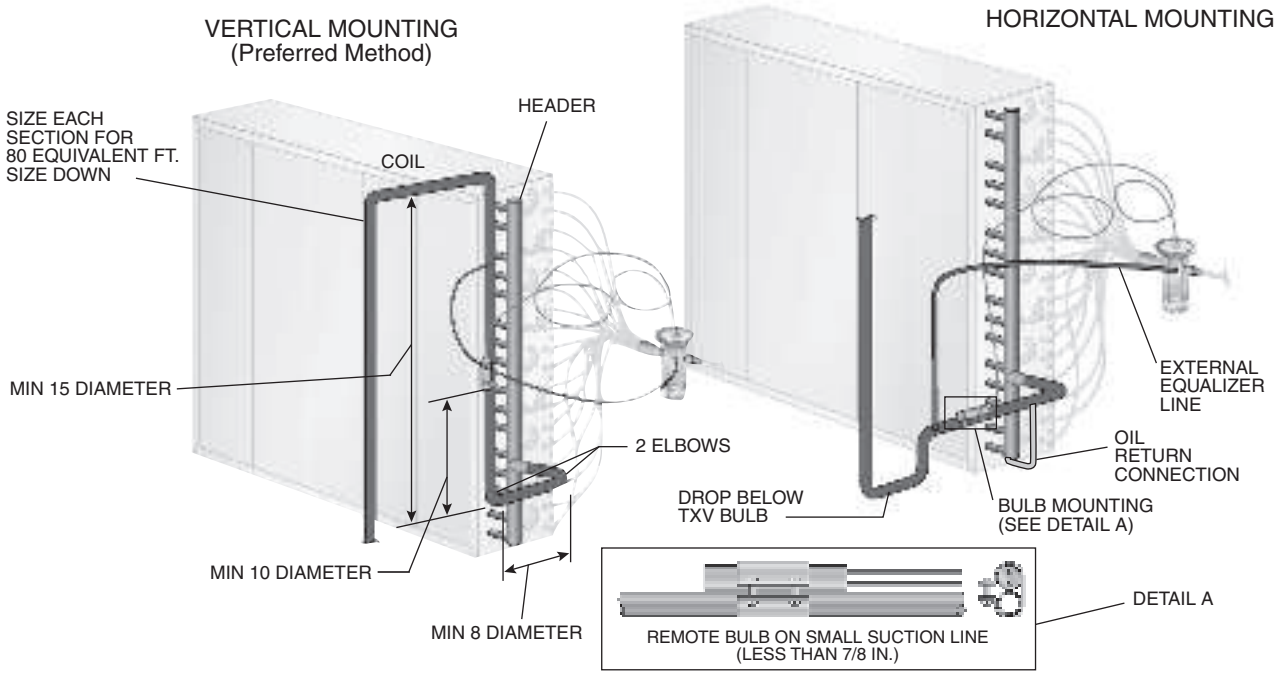

Fig. 108 — Refrigerant Piping Detail

NOTE: For satisfactory expansion valve control, good thermal contact between the bulb and suction line is essential. The bulb should be securely fastened with the two bulb straps, supplied with each expansion valve, to a clean straight section of the suction line.

NOTE: On multiple evaporator installations, the piping should be arranged so that the flow from any valve cannot affect the bulb of another. Approved piping practices, including the proper use of traps, ensures individual control for each valve without the influence of refrigerant and oil flow from other evaporators.

EXTERNAL EQUALIZER CONNECTION

Thermostatic expansion valves with an external equalizer connection will not work unless the connection is made to the suction line. The connection should be made at a point close to and directly downstream of the sensing bulb where the pressure can be properly sensed. The connection should not be located where a trap is in the suction line between the sensing bulb and the equalizer connection. If the connection is made on a horizontal section of the suction line, the connection should be made at the top of the tube. Equalizer connections on vertical risers should be at least 10 pipe diameters above the start of the riser.

Most TXVs used on larger evaporators are externally equalized. This line only provides pressure feed back to the TXV and does not allow refrigerant flow into the TXV. System pressures will not equalize through this line. Figure 108 shows good mounting locations.

If any evaporator pressure or temperature control valves are located in the suction line at or near the evaporator outlet, the equalizer must be connected on the evaporator side of these valves.

OIL RETURN CONNECTION

If the evaporator coil is supplied with an oil return connection at the bottom of the suction header, this small connection must be teed in ahead of the first mixing elbow and before the TXV bulb as shown in Fig. 108. The oil return line should be kept small in diameter; a 1/4-in. line will suffice in most cases. It is not necessary, when the compressor is below the evaporator, that the riser at the evaporator extends at least as high as the top level of the evaporator; after the 15-diameter riser has been provided, the suction line may elbow down immediately.

Piping loops serve to control oil accumulation in idle coil sections and prevent off cycle drain back. When the compressor is located below the evaporator the suction header should be extended above the highest point of the evaporator circuit before dropping to the compressor.

EXPANSION VALVE ADJUSTMENT

Each Sporlan TXV is thoroughly tested and set at the factory before shipment. The factory superheat setting will be correct and no further adjustment is required for the majority of applications.

How to Determine Superheat Correctly

1. Measure the temperature of the suction line at the bulb location.
2. Obtain the suction pressure that exists in the suction line at the bulb location by either of the following methods:
   a. If the valve is externally equalized, a gauge in the external equalizer line will indicate the desired pressure directly and accurately.
   b. Read the gauge pressure at the suction valve of the compressor. Add the estimated pressure drop through the suction line between bulb location and compressor suction valve to the pressure. The sum of the gauge reading and the estimated pressure drop will equal the approximate suction line pressure at the bulb.
3. Convert the pressure obtained in Step 2a or 2b above to saturated evaporator temperature by using a temperature-pressure chart.
4. Subtract the two temperatures obtained in Steps 1 and 3 — the difference is superheat.

How to Change the Superheat Setting

The valve should be set with the system as near as possible to design conditions. To reduce the superheat, turn the adjusting stem counterclockwise. To increase the superheat, turn the adjusting stem clockwise. When adjusting the valve, make no more than one turn of the stem at a time and observe the change in superheat closely to prevent over-shooting the desired setting. As much as

30 minutes may be required for the new balance to take place after an adjustment is made.

NOTE: Some valve bodies (G, EG, C, S, EBS and EMC) have a packing nut around the adjustment stem. It may be necessary to loosen the packing nut slightly to turn the adjusting stem. Do not forget to retighten the nut after the superheat is set.

Hot Gas Bypass

When low-load operation requires use of hot gas bypass, hot gas must be introduced between expansion valve and distributor.

Install auxiliary hot gas bypass side connector (field-supplied) in coil split that is *first-on, last-off*.

See Table 32 for auxiliary side connector sizes. Do not attempt to use a valve that is smaller or larger than distributor size. Inserting a bushing at the outlet will defeat the purpose of the internal nozzle tube extension.

Install the side connector as follows:

1. Remove distributor nozzle and retainer ring (area A) from distributor and reinstall in inlet (area B) of side connector. See Fig. 109.
2. Solder field-supplied extension nipple to coupling on distributor, then to side connector outlet, using a silver solder or equivalent with a melting point of 1300 to 1500°F. Extension nipple should be as short as possible.
3. Solder expansion valve outlet to side connector using 95-5 tin-antimony soft solder, for easy removal.
4. If required, install field-supplied adapter bushing or coupling to connector inlet before soldering to expansion valve outlet.

Table 32 — Auxiliary Side Connector (Hot Gas Bypass) Data

SPORLAN TYPE	CARRIER PART NO.	CONNECTION SIZES (IN.)			USED WITH SPORLAN DISTRIBUTOR TYPE	NOZZLE SIZE
		INLET — ODM SOLDER	OUTLET — ODF SOLDER	AUXILIARY — ODF SOLDER		
ASC-5-4	—	5/8	5/8	1/2	1620, 1622	J
ASC-7-4	EA19BA504	7/8	7/8	1/2	1112, 1113	G
ASC-9-5	EA19BA705	1-1/8	1-1/8	5/8	1115, 1116	E
ASC-11-7	EA19BA905	1-3/8	1-3/8	7/8	1117, 1126	C
ASC-13-9	—	1-5/8	1-5/8	1-1/8	1125, 1127, 1143	A

DIMENSIONS (in.)

SPORLAN TYPE	A	B	C	D	E	F
ASC-5-4	5/8 ODM	5/8 ODF	1.88	0.95	1.25	1/2 ODF
ASC-7-4	7/8 ODM	7/8 ODF	2.25	1.06	1.38	1/2 ODF
ASC-9-5	1-1/8 ODM	1-1/8 ODF	2.81	1.47	1.62	5/8 ODF
ASC-11-7	1-3/8 ODM	1-3/8 ODF	3.53	1.89	2.19	7/8 ODF
ASC-13-9	1-5/8 ODM	1-5/8 ODF	3.72	1.83	2.75	1-1/8 ODF

LEGEND
ODF — Outside Diameter, Female
ODM — Outside Diameter, Male

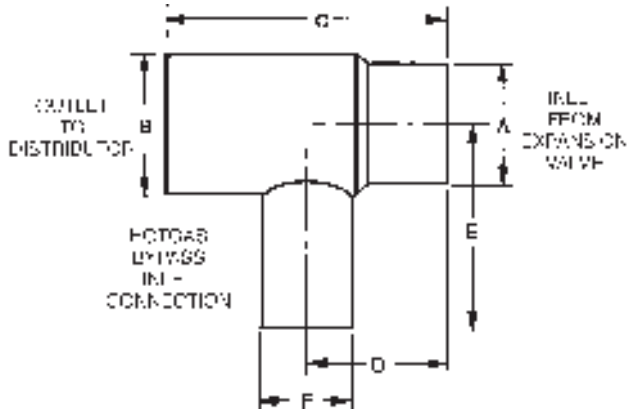

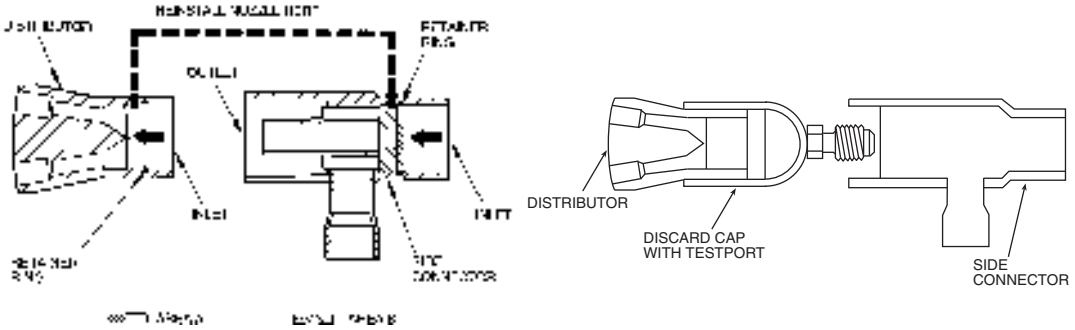

Fig. 109 — Distributor and Hot Gas Bypass Auxiliary Side Connector

SPECIAL PIPING WITH 4 SPLITS PER COIL

Manifolding for 2-Face Splits

Refer to Fig. 110 and externally manifold as follows:

1. Connect the 4 expansion valves to the 4 distributors on each coil and connect the 4 suction lines to the 15-diameter-long risers as outlined in previous piping instructions.
2. Install common liquid line for upper face split to first (upper) and second expansion valves. Also, install a common suction line from suction lines attached to first (upper) and second suction header connections.
3. Repeat Step 2 for lower face split using third and fourth distributor and suction connections.

Manifolding for 2-Row Splits

Refer to Fig. 111 and externally manifold as outlined for the 2-face splits with the following exceptions:

1. Manifold in pairs, the first and third coil connections for one split.
2. Manifold the second and fourth pairs of coil connections for the other split.

Note: Split section using first and third pairs of coil connections should be *first-on, last-off*.

Hot Gas Bypass Connection with 4 Splits per Coil

For either face or row splits connect a hot gas bypass auxiliary side connector to each distributor of coil split that is *first-on, last-off*. Refer to installation instructions for Hot Gas Bypass.

SPECIAL PIPING FOR DOUBLE-CIRCUIT COILS

All 8-row coils that are double circuited require special piping to manifold suction and liquid lines. See Tables 5-7 for detailed coil data.

Manifolding for 2-Face Splits

Refer to Fig. 110 for coils with less than 34 tubes in face. Externally manifold as follows:

1. Coils with less than 34 tubes: Connect the 4 expansion valves to the 4 distributors on each coil and connect the 4 suction lines to the 15-diameter-long risers as outlined in previous piping instructions. Refer to Fig. 110.
2. Install common liquid line for upper face split to first (upper) and second expansion valves. Also, install a common suction line from suction lines attached to first (upper) and second suction header connections.
3. Repeat Step 2 for lower face split using third and fourth distributor and suction connections.
4. For units with two coils repeat procedures of Steps 1, 2 and 3 for second coil.

Manifolding for 2-Row Splits

Refer to Fig. 111 for coils with less than 34 tubes in face. Externally manifold as outlined for the 2-face splits with the following exceptions:

1. Manifold in pairs, the first and third coil connections for one split.
2. Manifold the second and fourth pairs of coil connections for the other split.

Note: Split section using first and third pairs of coil connections should be *first-on, last-off*.

Hot Gas Bypass Connection for Double-Circuited Coils

For either face or row splits connect a hot gas bypass auxiliary side connector to each distributor of coil split that is first on, last off. Refer to installation instructions for Hot Gas Bypass.

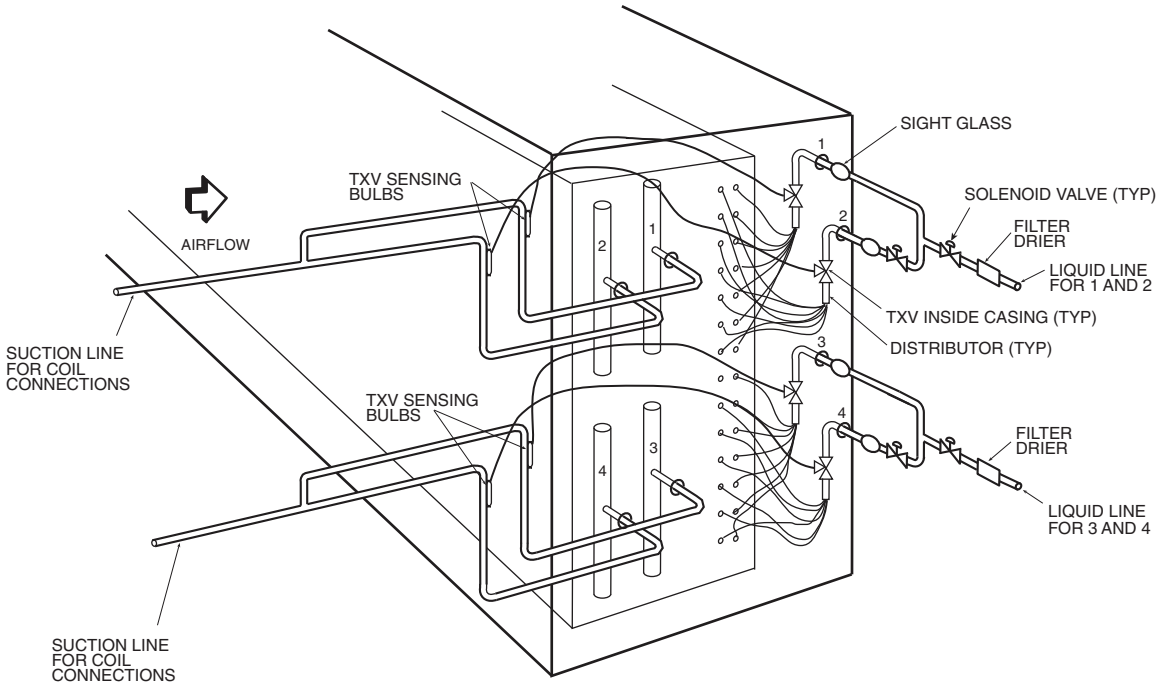

Fig. 110 — Face-Split Coil Manifolding (Typical)

LEGEND

TXV — Thermostatic Expansion Valve

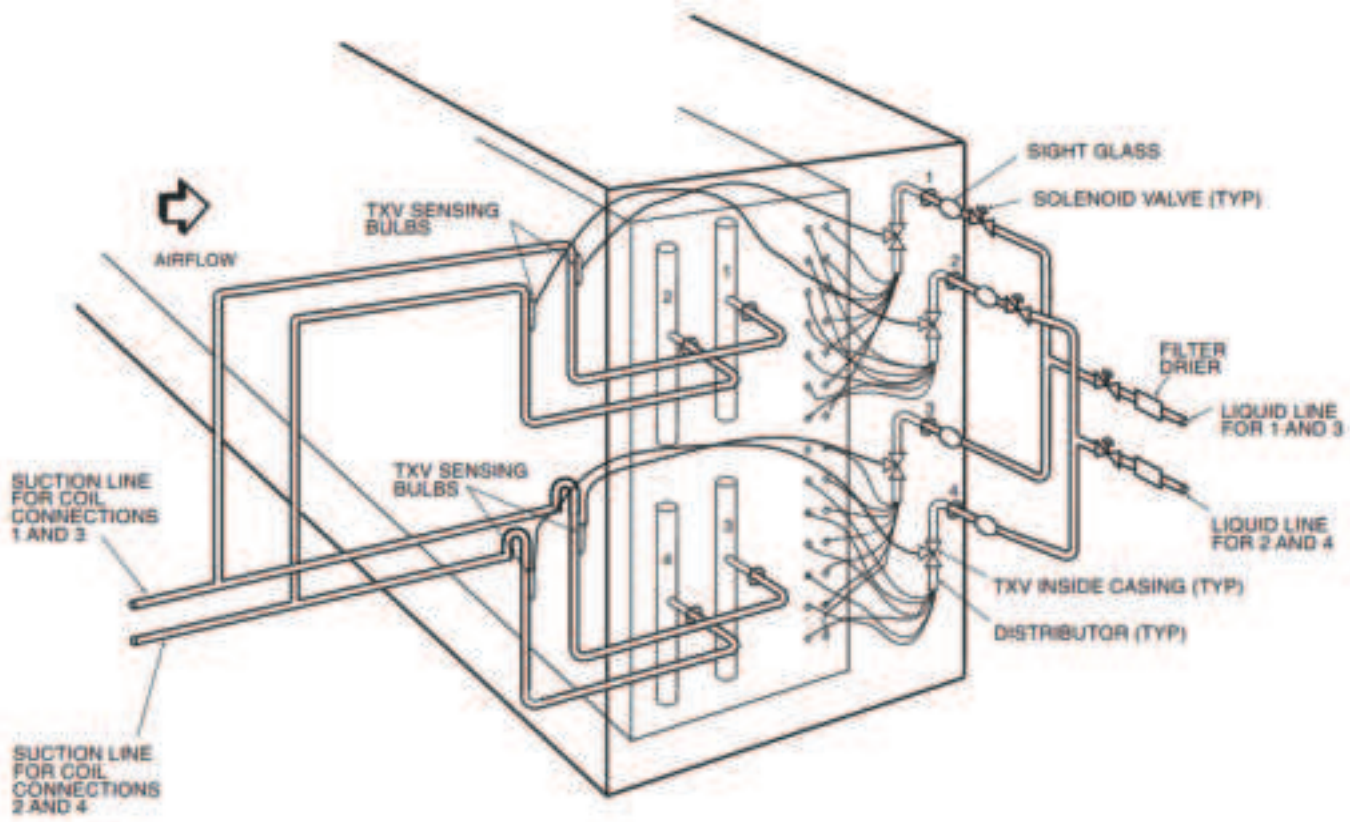

LEGEND
TXV — Thermostatic Expansion Valve

Fig. 111 — Row-Split Coil Manifolding (Typical)

Hot Gas Bypass Piping and Wiring

INSTALL PIPING (See Fig. 112)

⚠ WARNING

Shut off all power to the unit and remove refrigerant charge using an approved refrigerant recovery device before proceeding with installation.

1. In applications where the air handler refrigerant distributor is not equipped with a side outlet connection, it is recommended that a Sporlan in-line auxiliary side connector with standard distributor be used. Refer to the installation instructions for the indoor fan coil to obtain nozzle size and distributor connection size. Select the auxiliary side connector based on this information. The side connector must be installed on refrigerant circuit no. 1 (first stage of cooling) of the fan coil being used.
2. Install a field-supplied 1/4-in. NPT to 1/4-in. flare fitting on the gauge connection port of the compressor suction service valve.
3. Sweat the pilot solenoid valve supplied in the hot gas accessory package directly to the hot gas bypass valve on the 3/8-in. ODF external equalizer port.
4. Install field-supplied 1/4-in. copper tube (flared with a nut on each end) between the compressor suction valve and the hot gas pilot solenoid valve.
5. Connect a field-supplied 5/8-in. OD copper tube between the discharge line process tube (hot gas stub) and a field-supplied manual shutoff service valve, avoiding any traps in piping.
6. Connect another field-supplied 5/8-in. OD copper tube between the manual shutoff valve outlet and the hot gas bypass valve inlet.
7. Connect a field-supplied 5/8-in. OD copper tube between the leaving side of the hot gas bypass valve and the Sporlan auxiliary side connector (distributor-side connector).
8. Refer to Hot Gas Bypass installation instructions for wiring information.

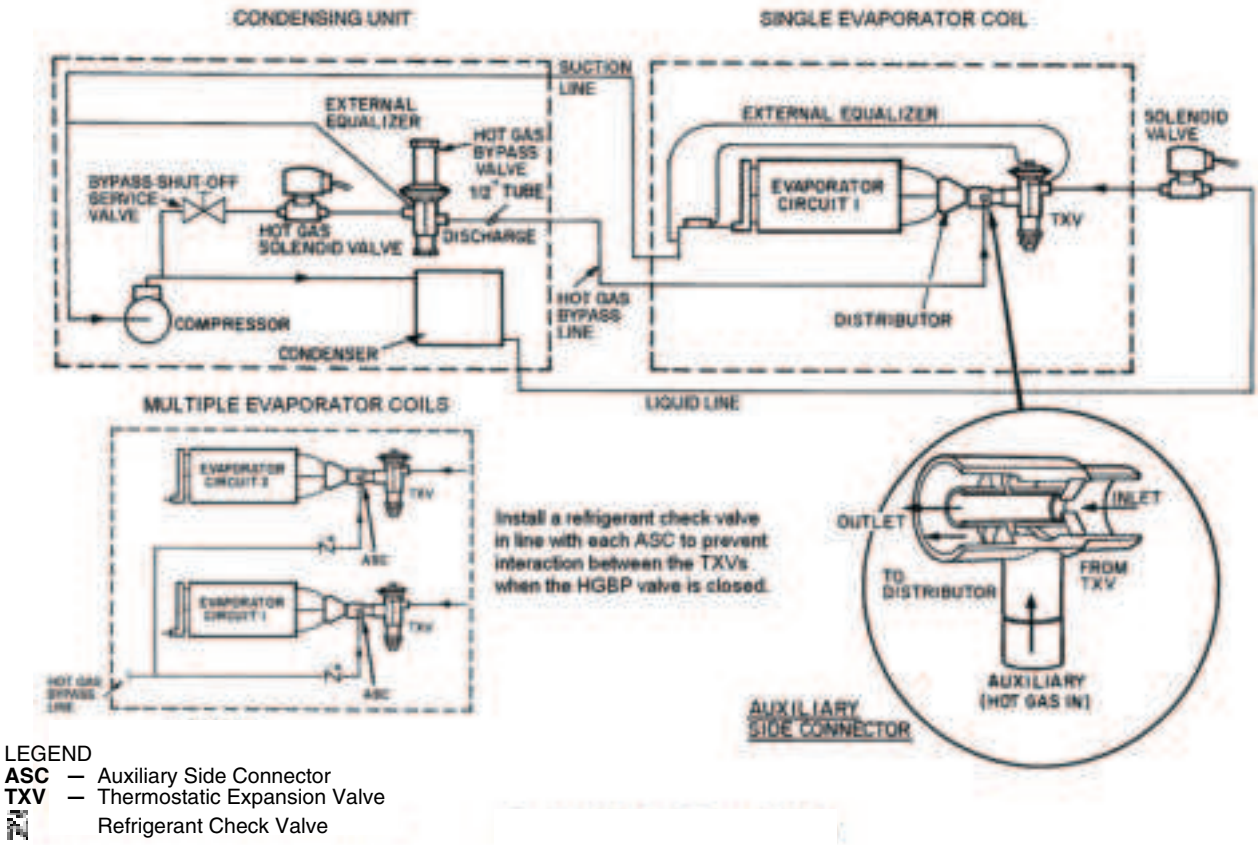

LEGEND
ASC — Auxiliary Side Connector
TXV — Thermostatic Expansion Valve
Refrigerant Check Valve

Fig. 112 — Hot Gas Bypass Piping

Condensate Drain

Install a condensate-trapping drain line at the unit's drain connection; use 1-1/2-in. standard pipe. See Fig. 113 and 114 for correct drain layout. Ensure adequate depth below base rail for the condensate trap. The condensate drain must not obstruct doors or create a tripping hazard.

When calculating trap depth on draw-thru or blow-thru applications, remember that it is not the total static pressure but the upstream or downstream static resistance that is trapped against. For instance, when calculating the trap depth for a cooling coil condensate pan on the draw-thru side, trap against the coil pressure drop in that coil section and any other pressure drops upstream of it.

Using Fig. 115 and 116, P_1 can be calculated to determine trap depth height.

For the draw-thru example, P_1 is equal to the static pressure in the cooling coil section plus all upstream static pressure, 2.5 inches. To account for such fluctuations as dirty filters, 1 inch is added to P_1 for the trap depth height (see Fig. 115).

Traps on draw-thru units must store enough condensate to prevent losing the drain seal at start-up. The "1/2 P_1 minimum" dimension ensures that enough condensate is stored.

For the blow-thru example, P_1 is equal to the coil's maximum positive pressure which is the fan's external pressure of 2.3 inches minus any static pressure losses between the fan and drain, in this case 1.2 in. wg from the cooling coil (see Fig. 116).

For all units, provide condensate freeze-up protection as required. On units with internal spring isolators, be sure the unit is mounted to allow sufficient clearance for the required drain trap depth.

Marine drain pans are available but are recommended for use in shipboard units only.

DRAW-THRU

Trap against all upstream static pressure including the drain pan section (cooling coil section).

BLOW-THRU

Trap against the external static pressure of the fan only.

Fan Motor Wiring Recommendations

Motors are rated for use with variable frequency drives. Refer to Table 33 for fan type and application. Full load amp (FLA) efficiency is listed in Table 34.

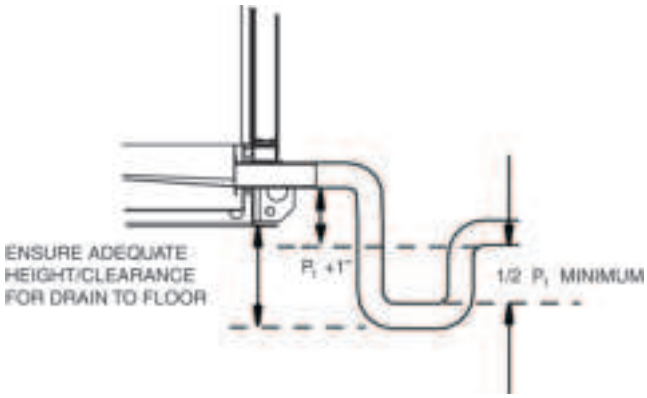

Fig. 113 — Condensate Drain, Draw-Thru Trapping (All Sizes)

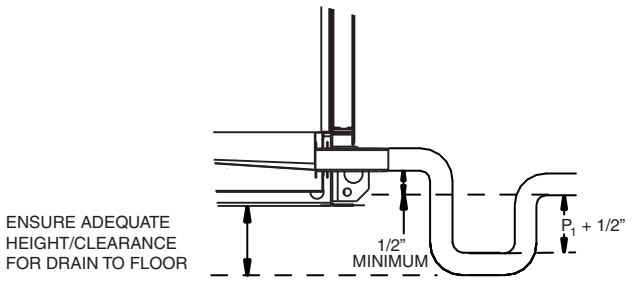

Fig. 114 — Condensate Drain, Blow-Thru Trapping (All Sizes)

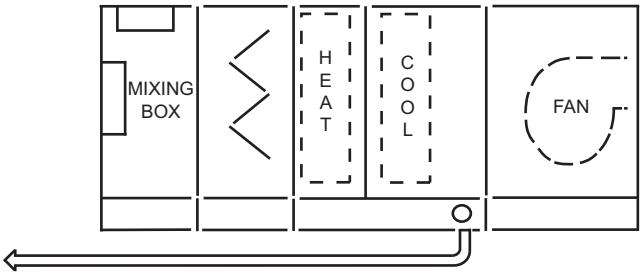

Return Duct 0.5 in. wg	MXB 0.4 in. wg	Clean Filter 0.2 in. wg	Heating Coil 0.2 in. wg	Cooling Coil 1.2 in. wg

Fig. 115 — Draw-Thru Example

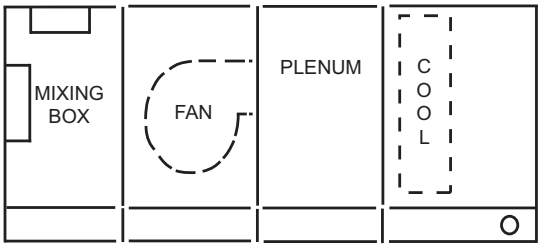

Static Pressure Between the Fan and Drain (Coil and Plenum Section) 1.2 in. wg

External Static Pressure Downstream of Fan 2.3 in. wg

Trap Against Static Pressure Downstream of Fan - Static Pressure Between Fan and Drain = 2.3 in. wg - 1.2 in. wg = 1.1 in. wg

Fig. 116 — Blow-Thru Example

Table 33 — Fan Type and Application

TYPE	CHARACTERISTICS	APPLICATION
FORWARD-CURVED (FC) SIDE VIEW	• Double-width, double-inlet (DWDI) construction. • Best at low or medium pressure (approximately 0 to 5 in. wg). • Horsepower increases continuously with increase in air quantity (overloads) as static pressure decreases. • Less expensive than AF fans. • Runs at relatively low speed, typically 400 to 1200 rpm. • Blades curve toward direction of rotation.	For low to medium pressure air-handling applications.
AIRFOIL (AF) SIDE VIEW	• Double-width, double-inlet (DWDI) construction. • Best in high capacity and high-pressure applications (4 to 8 in. wg). • Horsepower peaks at high capacities. • Most expensive of centrifugal fans. • Operates at high speeds, typically 1200 to 2800 rpm. About double the speed of FC fan for similar air quantity. • Blades have aerodynamic shape similar to airplane wing and are curved away from direction of rotation.	For medium to high air capacity and pressure applications.
PLENUM, DIRECT DRIVE WITH NEMA MOTORS (PAF) END VIEW	• Single-width, single-inlet (SWSI) construction. • Characteristics similar to DWDI airfoil fan. • Blades have aerodynamic shape similar to airplane wing and are curved away from direction of rotation. Fewer blades and wider blade spacing than AF fans. • Available as direct drive shaft mounted on a NEMA "T" frame.	Best in applications with limited space or multiple ducts.
PLENUM, DIRECT DRIVE WITH EC MOTORS (PFEC) END VIEW	• Single-width, single-inlet (SWSI) construction mounted to rotor of supplier matched electronically commutated motor. • Blades curve away from direction of rotation. • Various combinations of fan sizes and quantities available for fan efficiency optimization.	Best in applications with requirements for limited space, high-efficiency or fan redundancy.

Table 34 — Electrical Data — Premium Efficiency EISA Compliant Motors

ODP/OPSB T-FRAME MOTORS - 1800 RPM

MOTOR HP	FLA FOR 3-PHASE, 60 Hz VOLTAGES				EFF. (%)	NEMA FRAME
	208	230	460	575		
1.0	3.1	2.8	1.4	1.1	85.5	143T
1.5	4.6	4.2	2.1	1.7	86.5	145T
2.0	6.1	5.6	2.8	2.2	86.5	145T
3.0	8.6	7.8	3.9	3.1	89.5	182T
5.0	14.3	13.0	6.5	5.2	89.5	184T
7.5	20.8	18.8	9.4	7.5	91.0	213T
10.0	27.3	24.7	12.4	9.9	91.7	215T
15.0	39.8	36.0	18.0	14.4	93.0	254T
20.0	53.1	48.0	24.0	19.2	93.0	256T
25.0	65.5	59.3	29.6	23.7	93.6	284T
30.0	77.8	70.4	35.2	28.2	94.1	286T
40.0	103.8	93.8	46.9	37.5	94.1	324T
50.0	128.6	116.3	58.2	46.5	94.5	326T
60.0	152.7	138.1	69.1	55.2	95.0	364T
75.0	190.9	172.6	86.3	69.1	95.0	365T
100.0	252.4	228.3	114.1	91.3	95.4	404T
125.0	—	—	142.7	114.1	95.4	405T
150.0	—	—	169.8	135.8	95.8	444T

ODP/OPSB T-FRAME MOTORS - 3600 RPM

MOTOR HP	FLA FOR 3-PHASE, 60 Hz VOLTAGES				EFF. (%)	NEMA FRAME
	208	230	460	575		
1.0	3.9	3.5	1.8	1.4	77.0	143T
1.5	4.9	4.4	2.2	1.8	84.0	143T
2.0	6.3	5.7	2.8	2.3	85.5	145T
3.0	9.4	8.5	4.3	3.4	85.5	145T
5.0	15.4	13.9	6.9	5.6	86.5	182T
7.5	22.0	19.9	9.9	8.0	88.5	184T
10.0	28.7	25.9	13.0	10.4	89.5	213T
15.0	42.4	38.3	19.1	15.3	90.2	215T
20.0	55.5	50.2	25.1	20.1	91.0	254T
25.0	68.3	61.8	30.9	24.7	91.7	256T
30.0	82.0	74.1	37.1	29.6	91.7	284T
40.0	107.6	97.3	48.7	38.9	92.4	286T
50.0	132.8	120.1	60.0	48.0	93.0	324T
60.0	157.3	142.3	71.1	56.9	93.6	326T
75.0	196.6	177.8	88.9	71.1	93.6	364T
100.0	262.2	237.1	118.6	94.8	93.6	365T
125.0	—	—	146.6	117.3	94.1	404T
150.0	—	—	176.0	140.8	94.1	405T

TEFC T-FRAME MOTORS - 1800 RPM

MOTOR HP	FLA FOR 3-PHASE, 60 Hz VOLTAGES				EFF. (%)	NEMA FRAME
	208	230	460	575		
1.0	3.1	2.8	1.4	1.1	85.5	143T
1.5	4.6	4.2	2.1	1.7	86.5	145T
2.0	6.1	5.6	2.8	2.2	86.5	145T
3.0	8.6	7.8	3.9	3.1	89.5	182T
5.0	14.3	13.0	6.5	5.2	89.5	184T
7.5	20.5	18.5	9.3	7.4	91.7	213T
10.0	27.3	24.7	12.4	9.9	91.7	215T
15.0	40.4	36.5	18.2	14.6	92.4	254T
20.0	53.1	48.0	24.0	19.2	93.0	256T
25.0	65.5	59.3	29.6	23.7	93.6	284T
30.0	78.7	71.1	35.6	28.5	93.6	286T
40.0	103.8	93.8	46.9	37.5	94.1	324T
50.0	128.6	116.3	58.2	46.5	94.5	326T
60.0	152.7	138.1	69.1	55.2	95.0	364T
75.0	189.3	171.2	85.6	68.5	95.4	365T
100.0	252.4	228.3	114.1	91.3	95.4	405T
125.0	—	—	142.7	114.1	95.4	444T
150.0	—	—	169.8	135.8	95.8	445T

TEFC T-FRAME MOTORS - 3600 RPM

MOTOR HP	FLA FOR 3-PHASE, 60 Hz VOLTAGES				EFF. (%)	NEMA FRAME
	208	230	460	575		
1.0	3.9	3.5	1.8	1.4	77.0	143T
1.5	4.9	4.4	2.2	1.8	84.0	143T
2.0	6.3	5.7	2.8	2.3	85.5	145T
3.0	9.2	8.3	4.2	3.3	86.5	182T
5.0	14.7	13.3	6.6	5.3	88.5	184T
7.5	21.5	19.5	9.7	7.8	89.5	213T
10.0	28.2	25.5	12.8	10.2	90.2	215T
15.0	41.6	37.6	18.8	15.1	91.0	254T
20.0	55.5	50.2	25.1	20.1	91.0	256T
25.0	68.3	61.8	30.9	24.7	91.7	284T
30.0	82.0	74.1	37.1	29.6	91.7	286T
40.0	107.6	97.3	48.7	38.9	92.4	324T
50.0	132.8	120.1	60.0	48.0	93.0	326T
60.0	157.3	142.3	71.1	56.9	93.6	364T
75.0	196.6	177.8	88.9	71.1	93.6	365T
100.0	259.4	234.6	117.3	93.8	94.1	405T
125.0	—	—	143.9	115.1	95.0	444T
150.0	—	—	172.6	138.1	95.0	445T

LEGEND

EFF. — Efficiency
EISA — Energy Independence and Security Act of 2007
FLA — Full Load Amps
NEMA — National Electrical Manufacturers Association
ODP — Open Drip Proof
OPSB — Open Slotted Band
TEFC — Totally Enclosed Fan Cooled

NOTES:
1. Approximate motor full load amps listed. Actual motor full load amps can be found on the motor nameplate.
2. Motor voltage and availability is controlled by ***AHU*Builder®** program.

Table 34 — Electrical Data — Premium Efficiency EISA Compliant Motors (cont)

ODP/OPSB T-FRAME MOTORS - 1200 RPM

MOTOR HP	FLA FOR 3-PHASE, 60 HZ VOLTAGES				EFF. (%)	NEMA FRAME
	208	230	460	575		
1	3.9	3.6	1.8	—	82.5	145T
1.5	5.1	5.0	2.5	—	87.5	182T
2	7.5	6.8	3.4	—	88.5	184T
3	9.3	8.8	4.4	—	88.5	213T
5	15.2	14.8	7.4	—	89.5	215T
7.5	23.0	22.4	11.2	—	90.2	254T
10	30.0	28.6	14.3	—	91.7	256T
15	42.0	41.0	20.5	—	91.7	284T
20	56.0	54.0	27.0	—	92.4	286T
25	70.0	68.0	34.0	—	93.0	324T
30	80.0	76.0	38.0	—	93.6	326T
40	110.0	104.0	51.0	—	94.1	364T
50	132.0	124.0	62.0	—	94.1	365T

TEFC T-FRAME MOTORS - 1200 RPM

MOTOR HP	FLA FOR 3-PHASE, 60 HZ VOLTAGES				EFF. (%)	NEMA FRAME
	208	230	460	575		
1	3.9	3.6	1.8	1.4	82.5	145T
1.5	5.0	4.8	2.4	1.9	87.5	182T
2	7.7	7.0	3.5	2.8	88.5	184T
3	10.2	9.2	4.6	3.7	89.5	213T
5	15.3	14.6	7.3	5.8	89.5	215T
7.5	22.6	21.4	10.7	—	91.0	254T
10	30.0	28.8	14.4	—	91.0	256T
15	42.0	42.0	21.0	—	91.7	284T
20	56.0	54.0	27.0	—	91.7	286T
25	70.0	64.0	32.0	—	93.0	324T
30	83.0	78.0	39.0	—	93.0	326T
40	109.0	98.8	49.4	—	94.1	364T
50	133.0	123.0	61.7	—	94.1	365T

LEGEND

EFF. — Efficiency
EISA — Energy Independence and Security Act of 2007
FLA — Full Load Amps
NEMA — National Electrical Manufacturers Association
ODP — Open Drip Proof
OPSB — Open Slotted Band
TEFC — Totally Enclosed Fan Cooled

NOTES:
1. Approximate motor full load amps listed. Actual motor full load amps can be found on the motor nameplate.
2. Motor voltage and availability is controlled by ***AHU*Builder®** program.

Motor Nameplate Data

The 39 Series air-handling unit nameplates do not contain fan motor electrical data. The units as manufactured, are certified to meet all requirements, including unit markings, of UL1995 "Standard For Safety-Heating and Cooling Equipment."

The motor nameplate should be relied on to carry the motor electrical data. Here are several reasons the motor data is not on an external nameplate, separate from the motor:

1. Many units are shipped without motors, and the installing contractor provides field-supplied motors.
2. Typically, the motors provided are triple voltage motors and may be wired at the job site for 208, 230, or 460-volt power, as necessary.
3. The motor nameplate, which contains all necessary electrical information, is easily accessible inside the fan section.
4. Motor changes are quite often required during testing and balancing to meet actual job conditions. External nameplates could easily be left unchanged by the installing contractor.

NOTE: Where field wiring of motor is required, wire per instructions located in motor terminal box or on motor nameplate. See Fig. 117.

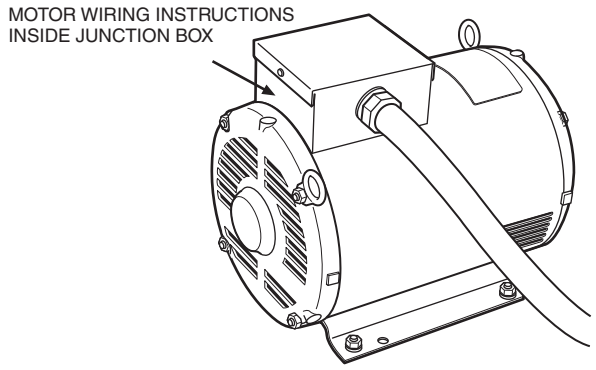

WIRE	VOLTS		VOLTAGE	CONNECTION
~~2 Y~~	~~LOW START~~		LOW	~~WYE~~
2 Δ	LOW RUN	OR		DELTA
~~1 Y~~	~~HIGH START~~		HIGH	~~WYE~~
1 Δ	HIGH RUN			DELTA

NOTES:
1. If the motor has 12 leads and wiring diagrams for both Wye and Delta OR Start and Run connections, ALWAYS wire to the RUN or DELTA connections with an across-the-line motor starter or VFD. Failure to do so will result in motor and/or starter/VFD damage.
2. Low-voltage motors include 190, 200, 208, and 230-v.
3. High-voltage motors include 380, 400, 460, and 480-v.

Fig. 117 — Field Wiring Instructions for Motor with 12 Leads

Fan Motor Starter

When starter is factory-installed, it is wired to the motor and fully tested before shipping. Before proceeding, open the starter cover and fan section access door to check for any damage.

FIELD-WIRING

1. Select a suitable location for the field power supply source; top is preferred.
2. Before drilling any hole, be sure the hole and any field-supplied conduit fittings will not interfere with the door or components inside the enclosure.
3. Drill the appropriate size hole and connect the field-supplied conduit to the enclosure.
4. Refer to the wiring diagram supplied with the starter and connect the line voltage power source to the line voltage terminals (L1, L2, L3) as shown.
5. Refer to the factory-supplied voltage warning label and verify that the power source is correct.
6. Connect the grounding wire to the grounding lug provided on the bottom of the starter.

NOTE: For remote control operation (AUTO position), fire/smoke shutdown, or shutdown on coil freeze protection, a second conduit should be used to connect these control functions.

IMPORTANT: This starter is designed to stop the equipment in both HAND and AUTO positions if either a fire/smoke or coil freeze condition is detected.

7. Select a location at the bottom of the starter near the control terminal block.
8. Before drilling any hole, be sure the hole and any field-supplied conduit fittings will not interfere with the door or components inside the enclosure.
9. Drill the appropriate size hole and connect the field-supplied conduit to the enclosure.
10. If a smoke detector or remote fire shut down is provided (field-supplied), remove the factory-supplied jumper between terminals 1 and 2 in the starter. Connect the normally closed, isolated dry contact from the smoke detector or fire system to these terminals.
11. If a coil freeze detection thermostat is provided, remove the factory-supplied jumper between terminals 1 and 2 in the starter. Connect the normally closed contact from the low temperature thermostat to these terminals.
12. For remote start/stop operation (when the HOA [hand/auto/off] switch is placed in the AUTO position), connect a field-supplied, normally open isolated dry contact between terminals 3 and 4. This contact must be suitable for at least 3 amps at 120 vac.

SINGLE-POINT POWER (OPTION) WIRING

If single-point power option has been requested, power wiring will be factory installed from the Fan Motor Starter to the unit single-point power enclosure installed on the unit supply fan.

NOTE: Power wiring will then be brought into the SPP box for this option (see the section “START-UP” on page 215).

START-UP AND TEST

Before applying power to the starter, verify that the motor overload inside the starter is set to the full load amperage (FLA or RLA) specified on the motor nameplate.

IMPORTANT: Many starters contain a multi-tap control transformer. The line voltage tap on the control transformer must be set in the field. For starters operating at 200/230-50 Hz, 208/230-60 Hz, or 380/400/415-50 Hz, the line voltage tap on the control transformer must be set to the appropriate line input voltage.

1. Set the HOA switch on the front of the starter to the OFF position.
2. Verify that the fan can freely rotate and remove any loose items inside the fan section.
3. Close and secure the fan access door or panel and the starter door cover.
4. Apply power to the starter.
5. Set the HOA switch in the HAND position and verify that the fan operates.

   For 3-phase motors:

   Place the switch back in the OFF position and carefully open the fan access door.

   Verify that the fan wheel is rotating in the proper direction. If it is not, remove power and reverse any two of the line voltage connections at the starter terminals (L1, L2, L3).
6. With the fan operating and the starter in the HAND position, verify that each safety or limit switch functions properly.
7. Repeat Step 6 with the switch in the AUTO position and the remote contact energized.

Disconnect

When disconnect is factory-installed, it is wired to the motor, and fully tested before shipped. Open the disconnect cover and fan section access door to check for damage before proceeding.

DISCONNECT WIRING

1. Connect the field line voltage power source to the top of the disconnect (knockouts are provided).
2. Remove the knockouts as required to accommodate the field-supplied conduit.
3. Refer to the wiring diagram supplied with the unit and connect the line voltage power source to the line voltage terminals (L1, L2, L3) as shown.
4. Refer to the factory-supplied voltage warning label and verify that the power source is correct.
5. Connect the ground wire to the grounding lug provided in the disconnect.

START-UP AND TEST

1. Set the disconnect switch to the OFF position.
2. Verify that the fan can freely rotate and remove any loose items inside the fan section.
3. Close and secure the fan access door and the disconnect door cover.
4. Apply power.
5. Set the disconnect switch to the ON position and verify that the fan operates.

   For 3-phase motors:

   Place the switch back in the OFF position and carefully open the fan access door.

   Verify that the fan wheel is rotating in the proper direction. If it is not, remove power and reverse any two of the line voltage connections at the starter terminals (L1, L2, L3).

NOTE: For fused type disconnects, blown fuses MUST be replaced with the same type and size originally supplied.

VFD

When variable frequency drive (VFD) is factory-installed, it is wired to the motor and fully tested before shipment. Drive programming is also done at the factory, including electronic overload, which is programmed for the motor FLA. Refer to Tables 35 and 37.

Open the VFD front cover and the fan section access door to check for any damage before proceeding.

FIELD-WIRING

1. Select a suitable location in the bottom of the VFD to connect field-supplied power source.
2. Remove the appropriate size knockout using a suitable knockout punch tool. Do NOT use a drill; metal shavings will damage the drive.
3. Connect the field-supplied conduit to the VFD enclosure.
4. Refer to the wiring diagram supplied with the VFD connect the line voltage power source to the line voltage terminals (U1, V1, W1) as shown.
5. Refer to the factory-supplied voltage warning label and verify that the power source is correct.
6. Connect the ground wire to the grounding lug provided on the bottom of the VFD.
7. Select another suitable location on the bottom of the VFD to connect the field-supplied control wiring.
8. Locate and use one of the unused knockouts on the VFD housing and connect the control wiring conduit. Refer to Fig. 118-120 for field control wiring connections.

NOTE: If a 0 to 10 or 2 to 10 vdc signal is used to control the drive speed, reset the dipswitch to the voltage or V position. Verify that the AI switch is set to the voltage position. See Fig. 121. DO NOT reprogram the drive.

SINGLE-POINT POWER (OPTION) WIRING

If single-point power option has been requested, power wiring will be factory installed from the Fan Motor VFD or Bypass (if external bypass is present) to the unit single-point power enclosure installed on the unit supply fan.

NOTE: Power wiring will then be brought into the SPP box for this option (see the section “START-UP” on page 215).

START-UP AND TEST

1. Close and secure the fan access door and the VFD cover.
2. Apply power and allow drive to initialize.
3. If fan is a direct drive type, then ensure VFD has been programmed with the correct values for parameters 2002 and 2008 to maximum fan speed and maximum VFD output frequency to limit motor speed to the fan maximum.

CAUTION

Failure to ensure parameters 2002 and 2008 are correct can result in damage to the fan wheel.

4. Verify max fan rpm from label on fan sled.
5. Verify motor Hz and nominal operating speed on motor nameplate.
6. Calculate the maximum frequency output from the VFD. Maximum frequency = motor frequency (Hz) * fan maximum speed (rpm) ÷ motor nominal operating speed (rpm).
7. Verify that parameter 2002 (maximum fan speed) has been set to match value on the fan label.
8. Select MENU to enter the main menu.
9. Select CHANGED PAR with the UP/DOWN buttons and select ENTER.
10. Select parameter 2002 and verify it equals the maximum fan speed.
11. If values are equal, then go to Step 14.
12. If values are not equal, select EDIT, press the UP/DOWN buttons to match the required value.
13. Select SAVE to store the modified value.
14. Select EXIT to return to the listing of parameters.
15. Select Parameter 2008 and verify it equals the maximum VFD output frequency.
16. If values are equal, then go to Step 19.
17. If values are not equal, select EDIT, press the UP/DOWN buttons to match the required value.
18. Select SAVE to store the modified value.
19. Select EXIT to return to the listing of parameters.
20. Select EXIT to return to the main menu.
21. Press the HAND button and verify that the drive operates at 8 Hz.
22. Press Up arrow to increase speed and Down arrow to decrease speed.
23. Press the Off button and verify that the fan stops.
24. Press the Auto button to operate the drive from the Energy Management System (EMS) interface. Verify that all VFD interface functions are working (start/stop, speed controls, fire/smoke, shutdown, etc.) between the VFD and the EMS.

Refer to Tables 35-37 for additional VFD information.

VFD with Bypass

When the VFD and bypass are factory-installed, they are wired to the motor and fully tested before shipped. The VFD is programmed at the factory as ordered, including electronic overload, which is programmed for the motor FLA (full load amps) as supplied.

Open the bypass box cover and the fan section access door to check for any damage before proceeding.

Table 35 — ACH550 VFD Data

39M MOTOR HP	ABB PART NO. ACH550-UH-	MAX. CONTINUOUS OUTPUT AMPS	FUSE AMPS	MCCB RATED AMPS	PROGRAMMED SETTINGS	
					Overload Trip Amps 4 pole / 2 pole	Max. Output Amps 4 pole / 2 pole
208-230 Volt / 3 Phase / 60 Hz (Programmed to Operate at 208 volts)						
1/2	04A6-2	4.6	10	15	1.8/ 1.7	3.0/ 2.2
3/4	04A6-2	4.6	10	15	2.6/ 2.5	3.2/ 3.0
1	04A6-2	4.6	10	15	3.5/ 3.2	3.8/ 3.8
1-1/2	06A6-2	6.6	10	15	5.2/ 4.2	5.8/ 5.8
2	07A5-2	7.5	10	15	6.7/ 5.9	7.2/ 7.0
3	012A-2	11.8	15	15	9.0/ 8.5	10.0/ 9.5
5	017A-2	16.7	25	25	14.5/ 13.6	16.7/ 16.0
7-1/2	024A-2	24.2	30	30	21.4/ 20.7	24.0/ 23.0
10	031A-2	30.8	40	40	27.4/ 27.4	30.8/ 30.0
15	046A-2	46.2	60	60	40.5/ 40.5	46.2/ 43.0
20	059A-2	59.4	80	80	53.0/ 52.2	59.4/ 57.0
25	075A-2	74.8	100	100	67.0/ 66.0	74.0/ 71.0
30	088A-2	88.0	110	110	82.0/ 78.0	85.0/ 82.0
40	114A-2	114.0	150	150	92.0/107.0	114.0/110.0
208-230 Volt / 3 Phase / 60 Hz (Programmed to Operate at 230 volts)						
50	143A-2	143.0	200	200	125.0/130.0	142.0/130.0
60	178A-2	178.0	250	250	154.0/135.0	172.0/145.0
75	221A-2	221.0	300	300	186.0/166.0	221.0/172.0
460 Volt / 3 Phase / 60 Hz (Programmed to Operate at 460 volts)						
1/2	03A3-4	3.3	10	15	0.9/ 1.0	1.5/ 1.2
3/4	03A3-4	3.3	10	15	1.3/ 1.2	1.7/ 1.5
1	03A3-4	3.3	10	15	1.6/ 1.5	1.9/ 1.7
1-1/2	03A3-4	3.3	10	15	2.2/ 2.0	2.8/ 2.3
2	03A3-4	3.3	10	15	2.7/ 2.7	3.0/ 3.0
3	06A9-4	5.4	10	15	4.0/ 3.8	4.5/ 4.2
5	06A9-4	6.9	10	15	6.2/ 6.0	6.9/ 6.5
7-1/2	012A-4	11.9	15	15	9.0/ 8.8	10.0/ 9.5
10	015A-4	15.4	20	20	12.0/ 11.6	13.6/ 12.8
15	023A-4	23.0	30	30	17.6/ 16.5	19.3/ 19.0
20	031A-4	31.0	40	40	23.0/ 23.0	25.0/ 25.0
25	031A-4	31.0	40	40	29.0/ 28.0	31.0/ 30.0
30	038A-4	38.0	50	50	34.5/ 34.0	38.0/ 38.0
40	059A-4	59.0	80	80	46.0/ 44.0	48.0/ 50.0
50	072A-4	72.0	90	90	58.0/ 55.0	60.0/ 60.0
60	078A-4	77.0	100	100	73.0/ 68.0	77.0/ 72.0
75	097A-4	96.0	125	125	90.0/ 85.0	94.0/ 90.0
100	125A-4	124.0	175	175	118.0/110.0	124.0/114.0
125	157A-4	157.0	200	200	141.0/139.0	147.0/147.0
150	180A-4	180.0	250	250	171.0/171.0	177.0/177.0
200-230 Volt / 3 Phase / 50 Hz (Programmed to Operate at 200 volts)						
1	04A6-2	4.6	10	15	3.3/ 3.3	3.9/ 3.9
1-1/2	06A6-2	6.6	10	15	4.9/ 4.9	5.8/ 5.8
2	07A5-2	7.5	10	15	6.3/ 6.3	7.1/ 7.1
3	012A-2	11.8	15	15	8.7/ 8.7	10.0/ 10.0
5	017A-2	16.7	25	25	14.0/ 14.0	16.7/ 16.7
7-1/2	024A-2	24.2	30	30	21.2/ 20.2	24.2/ 24.2
10	031A-2	30.8	40	40	27.2/ 27.4	30.8/ 30.8
15	046A-2	46.2	60	60	41.4/ 40.5	46.2/ 46.2
20	059A-2	59.4	80	80	53.4/ 49.0	59.4/ 56.0
25	075A-2	74.8	100	100	65.4/ 66.0	74.0/ 74.8
30	088A-2	88.0	110	110	78.0/ 78.0	86.0/ 86.0
40	114A-2	114.0	150	150	107.0/107.0	114.0/114.0
50	143A-2	143.0	200	200	135.0/135.0	135.0/135.0
60	178A-2	178.0	250	250	169.0/169.0	169.0/169.0
75	221A-2	221.0	300	300	210.0/210.0	210.0/210.0
380 Volts / 3 Phase / 50 Hz (Programmed to Operate at 400 volts)						
1	03A3-4	3.3	10	15	1.7/ 1.7	2.3/ 2.3
1-1/2	03A3-4	3.3	10	15	2.5/ 2.5	3.3/ 3.3
2	04A1-4	4.1	10	15	3.2/ 3.2	3.8/ 3.6
3	06A9-4	5.4	10	15	4.5/ 4.5	5.4/ 5.3
5	08A8-4	8.8	15	15	7.0/ 7.0	8.5/ 8.0
7-1/2	012A-4	11.9	15	15	10.6/ 8.9	11.9/ 11.0
10	015A-4	15.4	20	20	13.6/ 11.6	15.4/ 14.6
15	023A-4	23.0	30	30	20.7/ 17.0	22.6/ 21.0
20	031A-4	31.0	40	40	26.7/ 24.5	29.3/ 29.0
25	038A-4	38.0	50	50	32.7/ 29.5	37.0/ 36.0
30	045A-4	44.0	60	60	39.0/ 39.0	44.0/ 44.0
40	059A-4	59.0	80	80	53.5/ 45.5	57.0/ 55.0
50	078A-4	77.0	100	100	67.5/ 67.5	70.0/ 70.0
60	097A-4	96.0	125	125	84.5/ 84.5	88.0/ 88.0
75	125A-4	124.0	175	175	105.0/105.0	105.0/105.0
100	157A-4	157.0	200	200	134.0/134.0	134.0/134.0
125	180A-4	180.0	200	250	134.0/134.0	134.0/134.0

LEGEND
MCCB — Molded-Case Circuit Breaker

NOTE: Two-pole motors operate at a nominal 3600 rpm for 60 Hz and 3000 rpm for 50 Hz; 4-pole motors operate at a nominal 1800 rpm for 60 Hz and 1500 rpm for 50 Hz.

Table 36 — Air Handler ACH550 VFD Factory-Set Parameters

GROUP NUMBER	PARAMETER NUMBER	DESCRIPTION	VFD DRIVE ONLY PARAMETERS	VFD WITH E-CLIPSE DESCRIPTION / PARAMETER	
99	9902	Application Macro	Supply Fan	Eclipse	HVAC / 9902
	9904	Motor Control Mode	Scalar	Scalar	
	9905	Motor Normal Voltage	*	*	
	9906	Motor Normal Current	†	†	
	9907	Motor Normal Frequency	60hz or 50hz	60hz or 50hz	
	9908	Motor Normal Speed	Name plate rpm at load	Name plate rpm at load	
	9909	Motor Normal Power	Nameplate Hp	Nameplate Hp	
10	1001	EXT 1 Commands	DI-1 / 1001 (Start/Stop)	COMM	DI-1 / 1601
	1002	EXT 2 Commands	(0) N/A	COMM	
	1003	Direction	Forward	Forward	
11	1104	REF 1 Minimum	9.33 Hz at 60 Hz/ 7.78 Hz 50 Hz	9.33 Hz at 60 Hz/ 7.78 Hz 50 Hz	
	1105	REF 1 Maximum	Belt Drive 60Hz/50Hz Direct Drive Calculated Per Fan and Motor	Belt Drive 60Hz/50Hz Direct Drive Calculated Per Fan and Motor	
12	1201	Constant Speed Select	DI-3	NOT SEL	
	1202	Constant Speed Value	Field Program (8Hz - Motor Nominal Freq.)	Field Program (8Hz - Motor Nominal Freq.)	
13	1301	Minimum AI-1	0%	0%	
	1302	Maximum AI-1	100%	100%	
	1303	Filter AI-1	1 sec.	1 sec.	
	1304	Minimum AI-2	0%	0%	
	1305	Maximum AI-2	100%	100%	
	1306	Filter Ai-2	1 sec.	1 sec.	
14	1401	Relay Output 1	Started	READY	
	1402	Relay Output 2	Run	Run	
	1403	Relay Output 3	Fault (inverted)	Fault (inverted)	
16	1601	Run Enable	DI-2 / 1601	EMS S/S (Field Installed)	DI-2 / 1602
	1608	Start Enable 1 (safety 1)	DI-4 / 1608	Safety (COMM)	DI-3 / 1603
	1609	Start Enable 2 (safety 2)	DI-5 / 1609	Safety (Not configured)	DI-4 / 1604
20	2002	Maximum Fan Speed	Per Fan	Per Fan	
	2003	Maximum Current	**	**	
	2007	Minimum Frequency	8Hz	8Hz	
	2008	Maximum Frequency	Belt Drive 60Hz/50Hz Direct Drive Calculated Per Fan and Motor	Belt Drive 60Hz/50Hz Direct Drive Calculated Per Fan and Motor	
21	2101	Start Function	Fly Start	Fly Start	
	2102	Stop Function	Coast	Coast	
22	2202	Acceleration Time	60 Seconds	60 Seconds	
	2203	Deceleration Time	60 Seconds	60 Seconds	
26	2605	Volt/Freq Ratio	Linear	Linear	
	2606	Switching Frequency	8 hz	8 hz	
	2607	Switching Frequency Control	ON	ON	
30	3006	Motor Thermal Time	1050	1050	
	3007	Motor Load Curve	105%	105%	
	3008	Zero Speed Load	70%	70%	
	3009	Break Point Frequency	35 Hz	35 Hz	
	3010	Stall Function	Fault	Fault	
	3011	Stall Frequency	20 Hz	20 Hz	
	3012	Stall Time	20 Sec.	20 Sec.	
	3017	Earth Fault	Fault	Fault	
31	3101	Number of Retries	2	2	
	3102	Trial Time	600 sec.	600 sec.	
	3103	Delay Time	5 sec.	5 sec.	
	3104	AR Overcurrent	Enable	Enable	
	3105	AR Overvoltage	Enable	Enable	
	3106	AR Under voltage	Enable	Enable	
	3107	AR AI< Minimum	(0) Disable	(0) Disable	
	3108	AR External Fault	(0) Disable	(0) Disable	

Table 36 — Air Handler ACH550 VFD Factory-Set Parameters (cont)

GROUP NUMBER	PARAMETER NUMBER	DESCRIPTION	VFD DRIVE ONLY PARAMETERS	VFD WITH E-CLIPSE DESCRIPTION / PARAMETER	
34	3415	Signal Parameter 3	Speed	Speed	
	3416	Signal 3 Minimum	0	0	
	3417	Signal 3 Maximum	30000	30000	
	3418	Output 3 DSP From	0	0	
	3419	Output 3 DSP units	rpm	rpm	
	3420	Output 3 Minimum	0	0	
	3421	Output 3 Maximum	3000	3000	
40	4001	Gain	0.7	0.7	
	4002	Integration Time	30 sec.	30 sec.	
	4005	Error Value Invert	no	no	
	4006	Units	volts	volts	
	4007	Display Format	x.xxx	x.xxx	
	4010	Setpoint Select	Internal	Internal	
	4011	Internal Setpoint	Field Program (0.0v~10,0v)	Field Program (0.0v~10,0v)	
	4012	Setpoint Minimum	0 v	0 v	
	4013	Setpoint Maximum	10.0v	10.0v	
	4016	ACT 1 Input	AI-2	AI-2	
	4027	PID Parameter Set	SET 1	SET 1	
53	5301	EFB Protocol ID	0	118	
	5303	EFB Baud Rate	9.6	76.8	
	5304	EFB Parity	8 NONE 1	8 EVEN 1	
	5305	EFB Control Profile	ABB DRV LIM	DCU PROFILE	
	5310	EFB PAR 10	0	103	
	5311	EFM PAR 11	0	104	
98	9802	Comm Prot SEL	NOT SEL	STD MODBUS	

* Factory Programmed as follows: For 208-230v / 60 Hz = 208, 460v / 60 Hz = 460, 200-230v / 50 Hz = 200, 380 / 50 Hz = 400.

† Motor Nameplate Amps. Factory programmed per Programmed Settings in Table 35. This value should always be compared to the actual motor nameplate value before start-up.

** Maximum Output Amps — Factory programmed per Table 35.

Table 37 — Air Handler ACH580 VFD Factory-Set Parameters

GROUP	PARAMETER NUMBER	DESCRIPTION	ACH580 VFD DRIVE ONLY – PARAMETER	ACH580 VFD with E-CLIPSE – PARAMETER
10	10.24	Relay Output 1	Started	Started
	10.27	Relay Output 2	Running	Running
	10.30	Relay Output 3	FAULT(-1)	FAULT(-1)
12	12.15	AI1 Unit Selection	V (Volts) or mA (Milliamperes)	V (Volts) or mA (Milliamperes)
	12.19	REF 1 Minimum	9.33 Hz at 60 Hz/ 7.78 Hz 50 Hz	9.33 Hz at 60 Hz/ 7.78 Hz 50 Hz
	12.20	REF 1 Maximum	Belt Drive 60Hz/50Hz Direct Drive Calculated Per Fan and Motor	Belt Drive 60Hz/50Hz Direct Drive Calculated Per Fan and Motor
	12.17	Minimum AI-1	0	0
	12.18	Maximum AI-1	1	1
	12.16	Filter AI-1	1 sec.	1 sec.
	12.27	Minimum AI-2	0	0
	12.28	Maximum AI-2	1	1
	12.26	Filter Ai-2	1 sec.	1 sec.
20	20.01	EXT 1 Commands	IN1 Start	BYP 1601 - DI-1
	20.06	EXT 2 Commands	(0)Not selected	n/a
	20.21	Direction	Forward	Forward
	20.40	Run Enable	DI-2	BYP 1602 - DI-2
	20.41	Start Enable 1 (safety 1)	DI-4	BYP 1603 - DI-3
	20.42	Start Enable 2 (safety 2)	DI-5	BYP 1604 - DI-4
21	21.19	Start Function	Fly Start	Fly Start
	21.03	Stop Function	Coast	Coast
28	28.22	Constant Speed Select	DI-3	DI-3
	28.26	Constant Speed Value	Field Program (8Hz - Motor Nominal Freq.)	Field Program (8Hz - Motor Nominal Freq.)
	28.72	Acceleration Time	60 Seconds	60 Seconds
	28.73	Deceleration Time	60 Seconds	60 Seconds

Table 37 — Air Handler ACH580 VFD Factory-Set Parameters (cont)

GROUP	PARAMETER NUMBER	DESCRIPTION	ACH580 VFD DRIVE ONLY – PARAMETER	ACH580 VFD with E-CLIPSE – PARAMETER
30	30.12	Maximum Fan Speed	Per Fan	Per Fan
	30.17	Maximum Current	Motor Nameplate x Motor Service Factor	Motor Nameplate x Motor Service Factor
	30.13	Minimum Frequency	8Hz	8Hz
	30.14	Maximum Frequency	Belt Drive 60Hz/50Hz DirectDrive Calculated Per Fan and Motor	Belt Drive 60Hz/50Hz DirectDrive Calculated Per Fan and Motor
31	31.24	Stall Function	Fault	Fault
	31.27	Stall Frequency	20 Hz	20 Hz
	31.28	Stall Time	20 Sec.	20 Sec.
	31.20	Earth Fault	Fault	Fault
	31.14	Number of Retries	2	2
	31.15	Trial Time	60 sec.	60 sec.
	31.16	Delay Time	5 sec.	5 sec.
	31.12	AR Overcurrent	0000 0000 0000 0001	0000 0000 0000 0001
	31.12	AR Overvoltage	0000 0000 0000 0010	0000 0000 0000 0010
	31.12	AR Under voltage	0000 0000 0000 0100	0000 0000 0000 0100
	31.12	AR AI< Minimum	0000 0000 0000 0000	0000 0000 0000 0000
	31.12	AR External Fault	0000 0000 0000 0000	0000 0000 0000 0000
35	35.55	Motor Thermal Time	1050	1050
	35.51	Motor Load Curve	1.05	1.05
	35.52	Zero Speed Load	0.7	0.7
	35.53	Break Point Frequency	35 Hz	35 Hz
40	40.32	Gain	0.7	0.7
	40.33	Integration Time	30 sec.	30 sec.
	40.31	Error Value Invert	Not inverted (Ref - Fbk)	Not inverted (Ref - Fbk)
	40.79	Units	User text	User text
	40.16	Setpoint Select	Internal setpoint	Internal setpoint
	40.21	Internal Setpoint	Internal Setpoint	Internal Setpoint
	40.26	Setpoint Minimum	0 v	0 v
	40.27	Setpoint Maximum	10.0v	10.0v
	40.08	ACT 1 Input	AI2 scaled	AI2 scaled
	40.57	PID Parameter Set	PID set 1	PID set 1
58	58.02	EFB Protocol ID	DV PROT ID	???
	58.04	EFB Baud Rate	9.6	76.8
	58.05	EFB Parity	8 NONE 1	8 EVEN 1
	58.25	EFB Control Profile	ABB Drives	DCU PROFILE
	58.102	EFB PAR 10	0	103
	58.103	EFM PAR 11	0	104
	58.01	Comm Prot SEL	None	Modbus RTU
96	96.04	Application Macro	NO CROSS	NO CROSS?
97	97.20	Volt/Freq Ratio	Linear	Linear
	97.01	Switching Frequency	8 hz	8 hz
	97.02	Switching Frequency Control	ON	ON
99	99.04	Motor Control Mode	Scalar	Scalar
	99.06	Motor Normal Current	Refer to motor nameplate	Refer to motor nameplate
	99.07	Motor Normal Voltage	For 208-230v/60 Hz = 208, 460v/60 Hz = 460, 200-230v/50 Hz = 200, 380/50 Hz = 400.	For 208-230v/60 Hz = 208, 460v/60 Hz = 460, 200-230v/50 Hz = 200, 380/50 Hz = 400.
	99.08	Motor Normal Frequency	60hz or 50hz	60hz or 50hz
	99.09	Motor Normal Speed	Name plate rpm at load	Name plate rpm at load
	99.10	Motor Normal Power	Nameplate Hp	Nameplate Hp

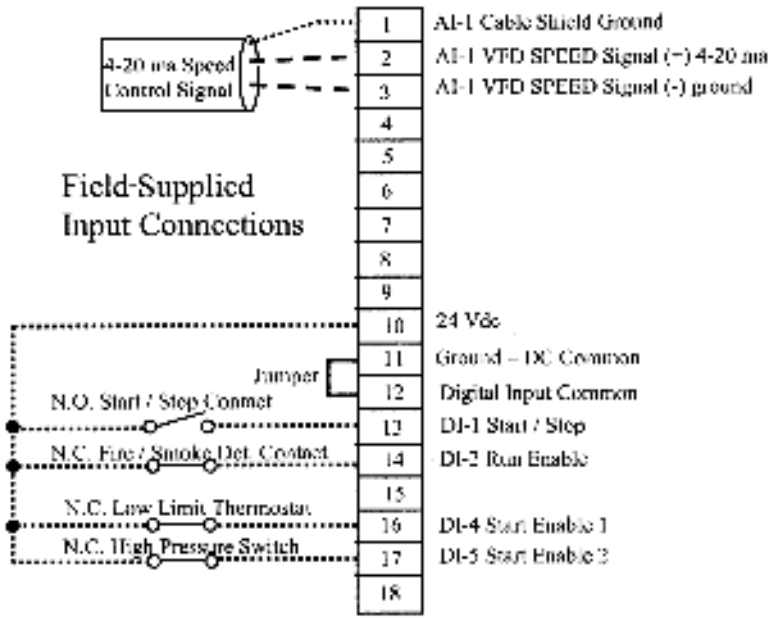

NOTES:
1. All conductors are no. 22 AWG (American Wire Gauge) minimum.
2. Install jumpers if fire/smoke detector, low limit thermostat, or high pressure switch are not required.

Fig. 118 — Field-Supplied Control Wiring for VFD Speed Control

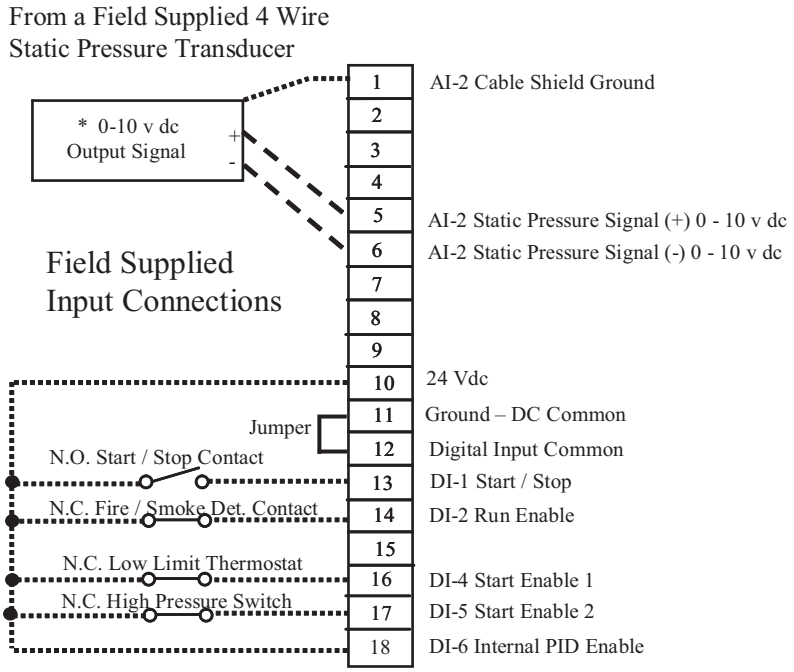

*Acceptable transducer output voltage ranges are 0-10 vdc, 0-5 vdc, and 2-10 vdc. Default sensor range is 0-10 vdc from factory. Use parameters 4008 to configure sensor low voltage and parameter 4009 to configure sensor high voltage.
NOTES:
1. All conductors are no. 22 AWG (American Wire Gauge) minimum.
2. Install jumpers if fire/smoke detector, low limit thermostat, or high pressure switch are not required.
3. Program static pressure control set point using parameter 4011 in volts vdc.

Fig. 119 — Field Wiring for Stand-Alone Static Pressure Control with 4-Wire Static Pressure Transducer (Voltage Output)

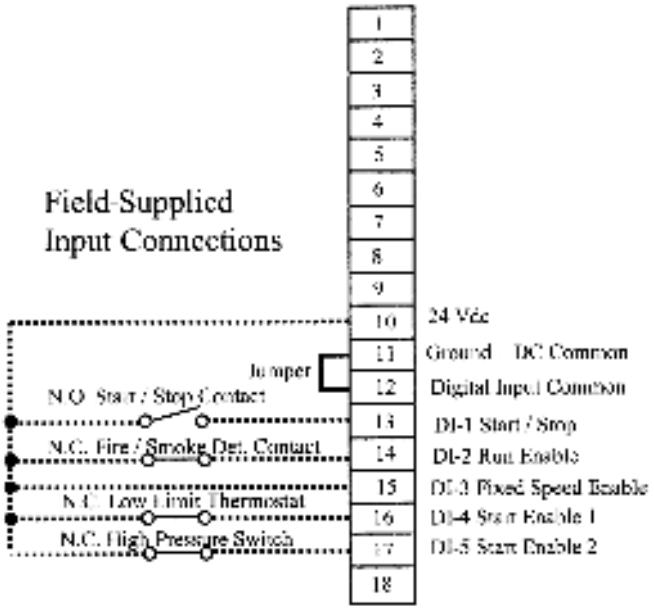

NOTES:
1. All conductors are no. 22 AWG (American Wire Gauge) minimum.
2. Install jumpers if fire/smoke detector, low limit thermostat, or high pressure switch are not required.
3. Program desired speed set point in Hz using parameter 1202.

Fig. 120 — Field Wiring for High Inertia/Low Horsepower Applications Using VFD as a Starter

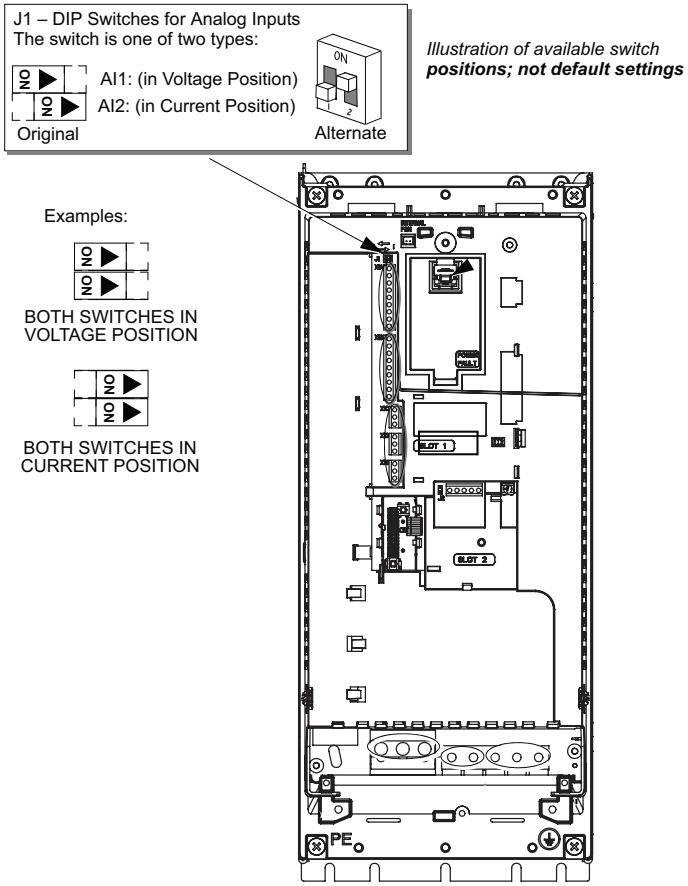

Fig. 121 — Setting AI Switch to Voltage Position

WIRING

1. Select a suitable location in the bottom panel of the bypass box to connect field-supplied power source.
2. Before drilling any hole, be sure the hole and any field-supplied conduit fittings will not interfere with the door or components inside the enclosure.
3. Drill the appropriate size hole and connect the field-supplied conduit to the enclosure.
4. Refer to the wiring diagram supplied with the bypass and connect the line voltage power source to the line voltage terminals (L1, L2, L3) as shown.
5. Refer to the factory-supplied voltage warning label and verify that the power source is correct.
6. Connect the ground wire to the grounding lug provided on the bottom of the bypass box.
7. Refer to the section "VFD" on page 146, Steps 7 and 8, to connect VFD control wiring.

START-UP AND TEST

Before applying power to the VFD Bypass and VFD, verify that the motor overload inside the bypass has been set to the full load amperage (FLA or RLA) as specified on the motor nameplate.

IMPORTANT: Some bypass assemblies (208/230-60, 200/230-50, 380/400/415-50) contain a multi-tap control transformer. The line voltage tap on the control transformer must be adjusted to the appropriate line voltage.

NOTE: Bypasses with a 115-v control transformer can be field modified to incorporate a normally closed safety contact. This safety contact (in addition to the VFD shutdown wiring) wires into the fire alarm system to shut down the unit even if the unit is running in the bypass position. See Fig. 122 and 123.

1. Set the switch on the front of the bypass to the OFF position.
2. Verify that the fan freely rotates and remove and loose items inside the fan section.
3. Close and secure the fan access door and the bypass and VFD covers.
4. Apply power.
5. Set the switch to the LINE position and verify that the fan operates.

   For 3-phase motors:

   Place the switch back in the OFF position and carefully open the fan access door.

   Verify that the fan wheel is rotating in the proper direction. If it is not, remove power and reverse any two of the line voltage connections in the bypass box (L1, L2, L3). DO NOT swap the motor leads; this will cause the fan to rotate in the reverse direction when operating from the VFD.
6. Make sure the bypass cover is closed then apply power.
7. Set the switch to the DRIVE position and verify that the VFD operates.
8. Press the Hand button and verify that the fan operates.

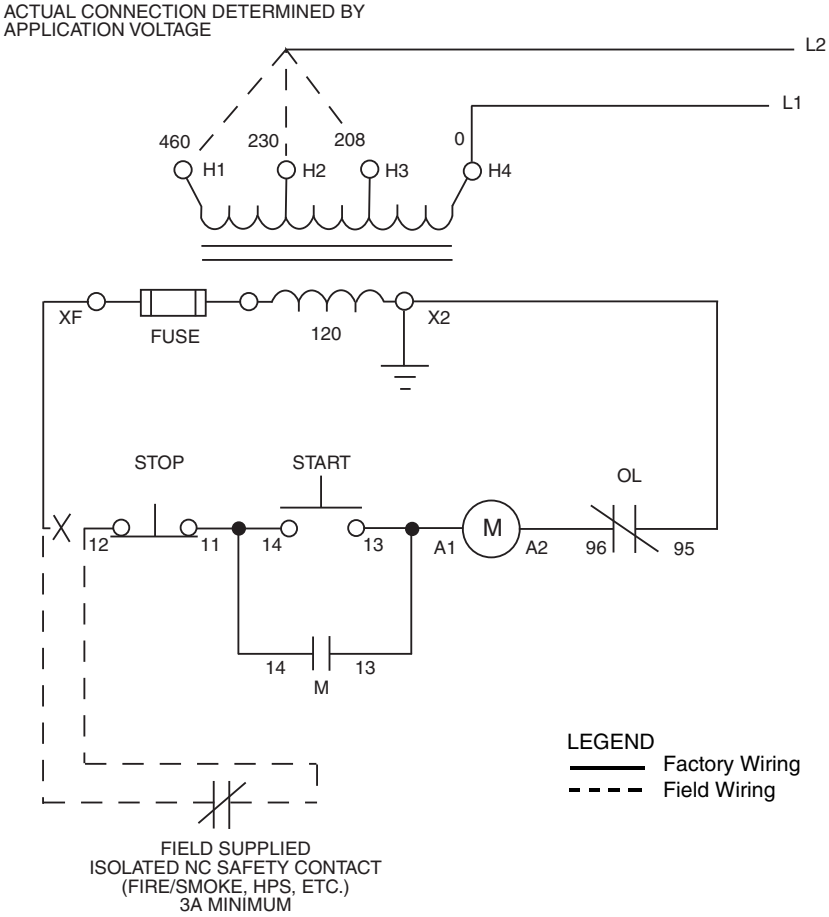

Fig. 122 — VFD Bypass Safety Shutdown Modification — Bypass with 115 Volt Control Transformer

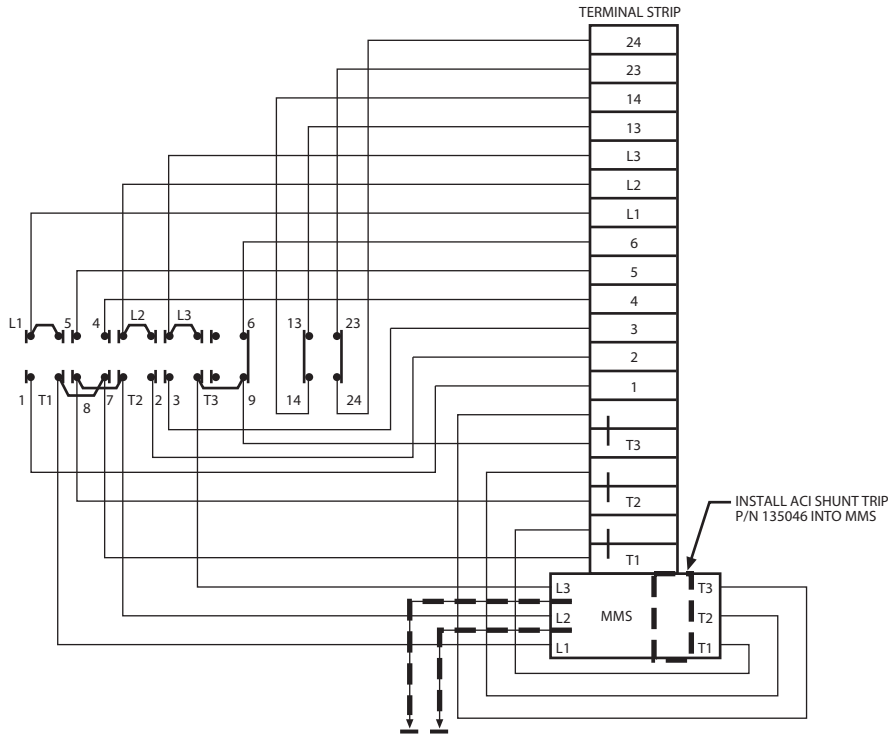

LEGEND
MMS — Manual Motor Starter
——— Factory Wiring
- - - - Field Wiring

NOTES:
1. Connect field-supplied 120-vac control signal (from fire/life safety circuit) to 2 leads from shunt trip (P/N 135046).
2. A 120-v signal will energize the shunt trip and break the manual motor starter contact when in an alarm condition.

Fig. 123 — VFD Bypass Safety Shutdown Modification — Bypass without 115 Volt Control Transformer

9. Press the Auto button and verify that the drive operates from the EMS interface. Verify that all VFD interface functions between the VFD and the EMS system are working.

Shunt Trip Installation, ACI Part No. 135046

Follow these steps to incorporate a 120-v shunt trip (ACI part no. 135046) onto an older style manual motor starter (MMS).

1. Turn off all power to the unit. Follow all shut down and lock-out/tag-out procedures.

⚠ WARNING

Electrical shock can cause personal injury and death. Shut off all power to this equipment during installation and service. There may be more than one disconnect switch. Tag all disconnect locations to alert others not to restore power until work is completed.

2. The MMS is located in the DIN rail assembly. Record which wires are connected to the MMS. Then carefully remove the wires from the MMS.
3. Remove the left DIN rail stop, then push the MMS carefully towards the bottom and lift it off the rail.
4. Remove the top cover of the MMS by pressing lightly with thumb and forefinger by L2 and T2, and pull straight up. See Fig. 124.
5. Install the shunt trip into the MMS as shown in Fig. 125.
6. Run the 2 white leads from the shunt trip unit through the 2 holes in the MMS cover and carefully replace the MMS cover. See Fig. 126.
7. Connect the 2 white leaders to a customer-supplied 120-volt signal from a fire safety circuit to energize the MMS shunt trip in an alarm condition.
8. Reinstall the MMS onto the DIN rail and reconnect the wiring.
9. Check performance of the shunt trip.

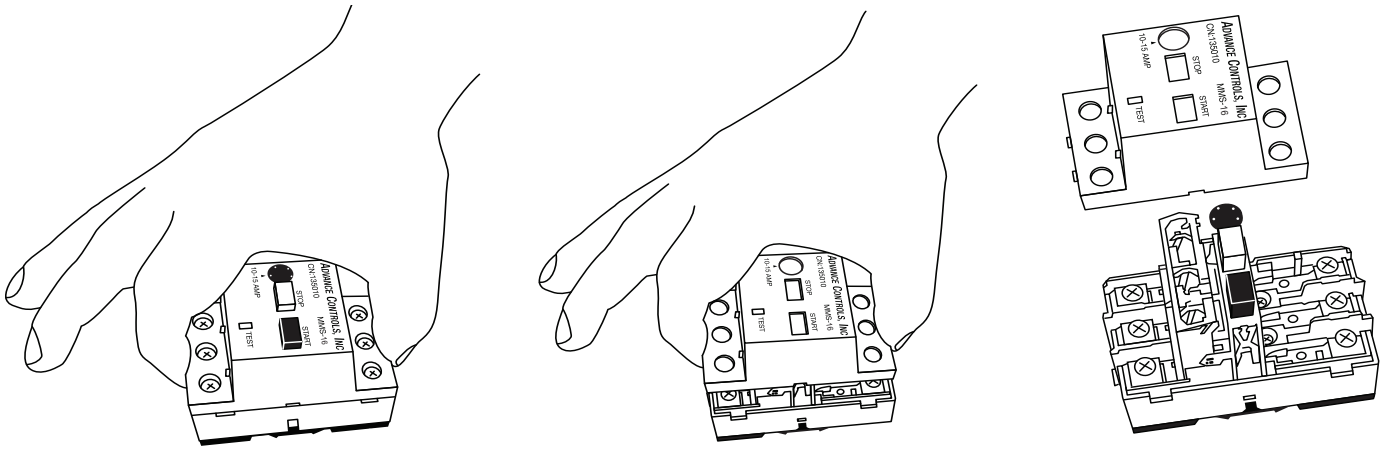

Fig. 124 — Removing the MMS Cover

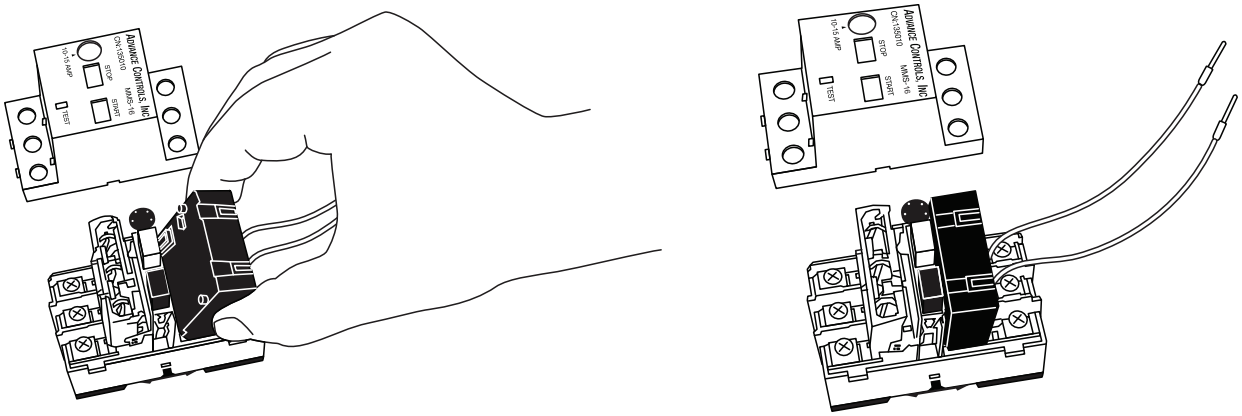

Fig. 125 — Installing the Shunt Trip (ACI Part No. 135046)

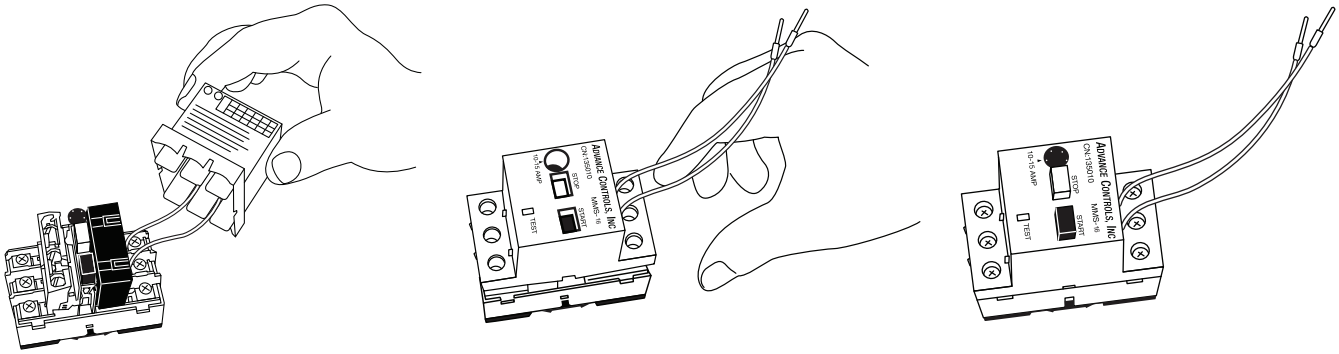

Fig. 126 — Running the Leads and Replacing the Cover

Shunt Trip Installation, ACI Part No. 135728 or 135728A

Follow these steps to incorporate a 24-v shunt trip (ACI part no. 135728) or 120-v shunt trip (ACI part no. 135728A) onto a newer style manual motor starter (MMS). Figure 127 shows the shunt trip device.

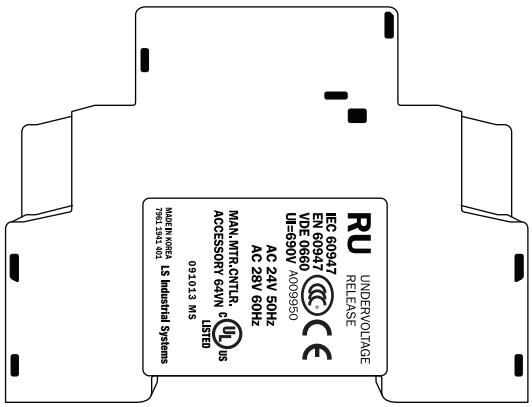

Fig. 127 — Shunt Trip Device, ACI Part No. 135728/135728A

1. Turn off all power to the unit. Follow all shut down and lock-out/tag-out procedures.

⚠ WARNING

Electrical shock can cause personal injury and death. Shut off all power to this equipment during installation and service. There may be more than one disconnect switch. Tag all disconnect locations to alert others not to restore power until work is completed.

2. The MMS is located on the DIN rail assembly. See Fig. 128. Record which wires are connected to the MMS. Then carefully remove the wires from the MMS.

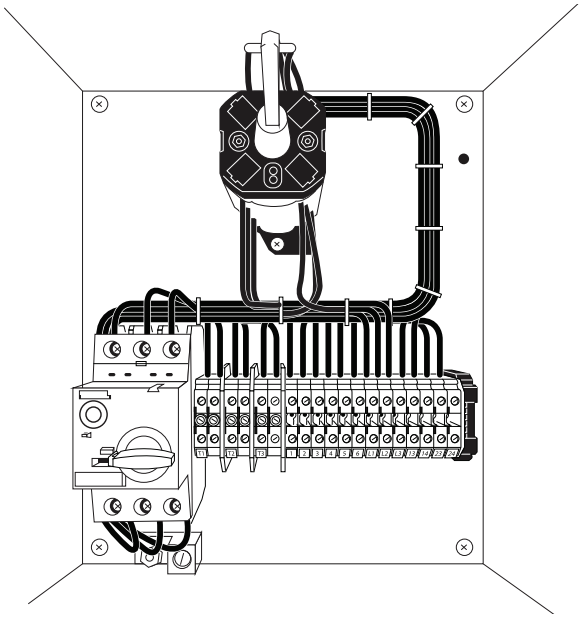

Fig. 128 — MMS on DIN Rail Assembly

3. Remove the left DIN rail stop, then push the MMS carefully towards the bottom and lift it off the rail.
4. Install the shunt trip into the MMS as shown in Fig. 129.
5. With the shunt trip device seated flush with the MMS, reinstall the MMS on the DIN rail by pushing down from the top and seating from the bottom.

   NOTE: For some units, the wire bundle may need to be adjusted to allow the MMS and the shunt trip device to connect to the DIN rail.
6. Reconnect the wiring. Figure 130 shows the MMS before and after shunt trip installation.
7. Check performance of the shunt trip.

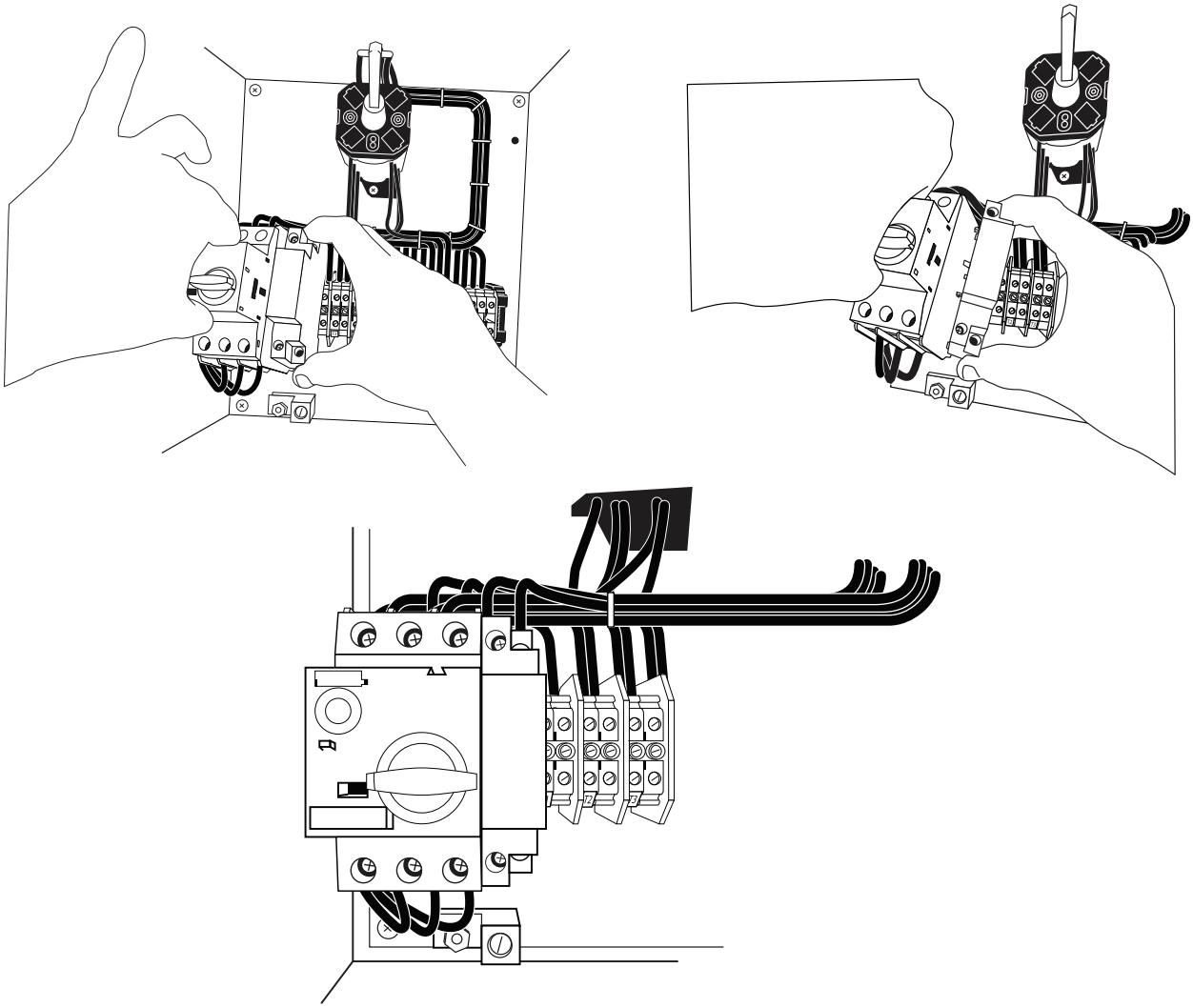

Fig. 129 — Connecting Shunt Trip Device to MMS

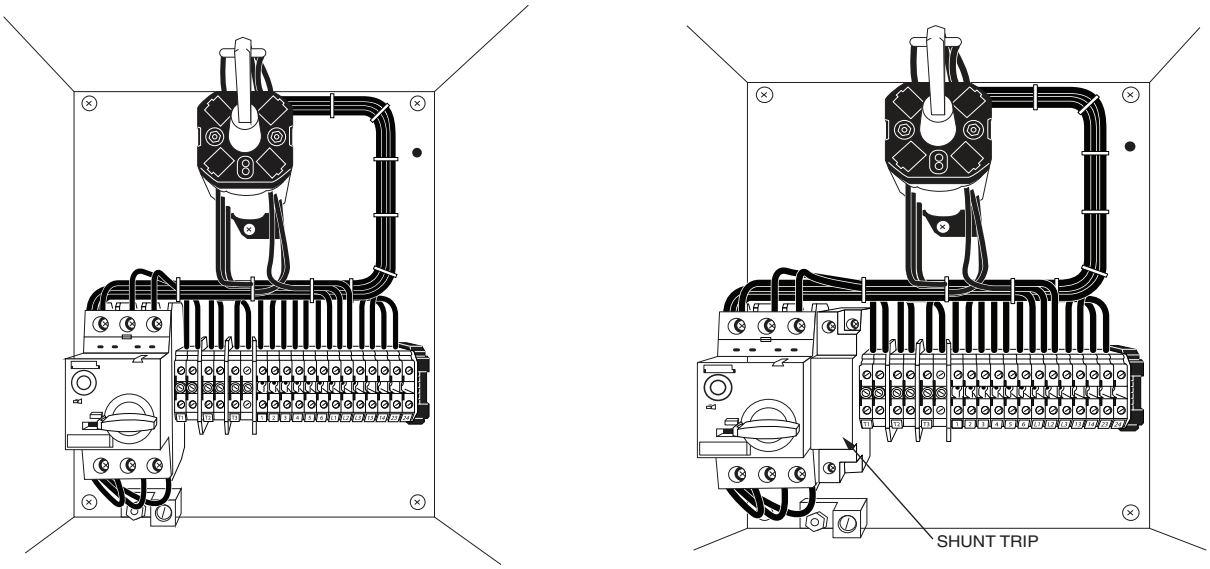

Fig. 130 — MMS Before and After Shunt Trip Installation

ACH550 VFD Configuration

The VFD keypad is shown in Fig. 131. The function of SOFT KEYS 1 and 2 change depending on what is displayed on the screen. The function of SOFT KEY 1 matches the word in the lower left-hand box on the display screen. The function of SOFT KEY 2 matches the word in the lower right-hand box on the display screen. If the box is empty, then the SOFT KEY does not have a function on that specific screen. The UP and DOWN keys are used to navigate through the menus. The OFF key is used to turn off the VFD. The AUTO key is used to change control of the drive to automatic control. The HAND key is used to change control of the drive to local (hand held) control. The HELP button is used to access the help screens.

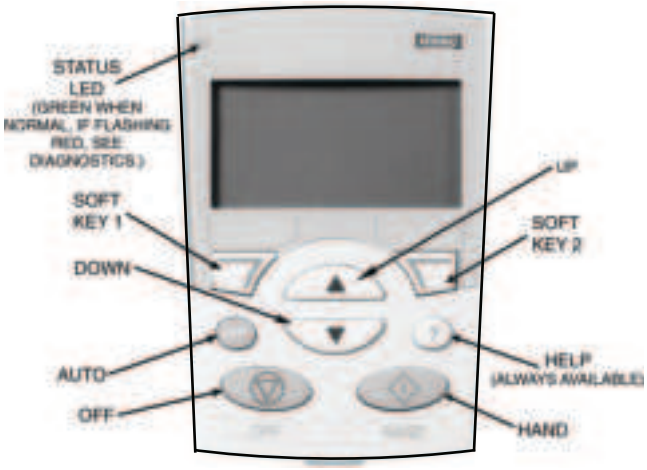

Fig. 131 — ACH 550 VFD Keypad (P/N ACH-CP-H)

START-UP WITH ASSISTANT

The initial start-up has been performed at the factory. To start up the VFD with the Start-Up Assistant, perform the following procedure:

1. Select MENU (SOFT KEY 2). The Main menu will be displayed.
2. Use the UP or DOWN keys to highlight ASSISTANTS on the display screen and press ENTER (SOFT KEY 2).
3. Use the UP or DOWN keys to highlight Commission Drive and press SEL (SOFT KEY 2).
4. The Start-Up Assistant will display the parameters that need to be configured. Select the desired values and press SAVE (SOFT KEY 2) after every change. The process will continue until all the parameters are set.

START-UP BY CHANGING PARAMETERS INDIVIDUALLY

Initial start-up is performed at the factory. To start up the VFD by changing individual parameters, perform the following procedure:

1. Select MENU (SOFT KEY 2). The Main menu will be displayed.
2. Use the UP or DOWN keys to highlight PARAMETERS on the display screen and press ENTER (SOFT KEY 2).
3. Use the UP and DOWN keys to highlight the desired parameter group and press SEL (SOFT KEY 2).
4. Use the UP or DOWN keys to highlight the desired parameter and press EDIT (SOFT KEY 2).
5. Use the UP or DOWN keys to change the value of the parameter.
6. Press SAVE (SOFT KEY 2) to store the modified value. Press CANCEL (SOFT KEY 1) to keep the previous value. Any modifications that are not saved will not be changed.
7. Choose another parameter or press EXIT (SOFT KEY 1) to return to the listing of parameter groups. Continue until all the parameters have been configured and then press EXIT (SOFT KEY 1) to return to the main menu.

NOTE: The current parameter value appears above the highlighted parameter. To view the default parameter value, press the UP and DOWN keys simultaneously. To restore the default factory settings, select the application macro “HVAC Default.”

ACH 550 VFD Modes

The VFD has several different modes for configuring, operating, and diagnosing the VFD. The modes are:

- Standard Display mode — shows drive status information and operates the drive
- Parameters mode — edits parameter values individually
- Start-Up Assistant mode — guides the start up and configuration
- Changed Parameters mode — shows all changed parameters

- Drive Parameter Backup mode — stores or uploads the parameters
- Clock Set mode — sets the time and date for the drive
- I/O Settings mode — checks and edits the I/O settings

STANDARD DISPLAY MODE

Use the Standard Display mode to read information on the drive status and operate the drive. To reach the standard display mode, press EXIT until the LCD display shows status information as described below. See Fig. 132.

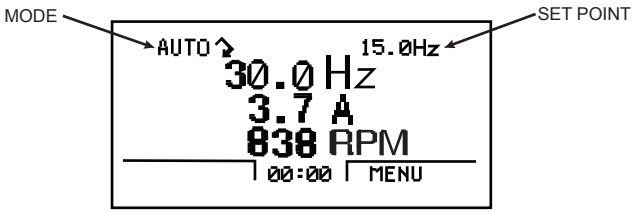

Fig. 132 — Standard Display Example

The top line of the LCD display shows the basic status information of the drive. The HAND icon indicates that the drive control is local from the control panel. The AUTO icon indicates that the drive control is in remote control mode through the I/O.

The arrow icon indicates the drive and motor rotation status. A rotating arrow (clockwise or counterclockwise) indicates that the drive is running. A rotating blinking arrow indicates that the drive is running but not at set point. A stationary arrow indicates that the drive is stopped. For Carrier air handler units, the rotation is always forward.

Using parameter group 34, the middle of the LCD display can be configured to display 3 parameter values. The default display shows parameters 0103 (OUTPUT FREQ) in Hz, 0104 (CURRENT) in amperes, and AI1 (Analog Input 1) in revolutions per minute.

The upper right hand corner shows the frequency set point that the drive will maintain.

The bottom corners of the LCD display show the functions currently assigned to the two soft keys. The lower middle displays the current time (if configured to show the time).

The first time the drive is powered up, it is in the OFF mode. To switch to local hand-held control and control the drive using the control panel, press the HAND or AUTO buttons. Pressing the HAND button switches the drive to hand control while keeping the drive running. Pressing the AUTO button switches the drive to remote input control. The OFF button stops the drive. To return to auto control, press the AUTO button. To start the drive press the HAND or AUTO button, to stop the drive press the OFF button.

To adjust the speed set point while in HAND mode, press the UP or DOWN buttons (the reference changes immediately). The reference can be modified in the local control (HAND) mode, and can be parameterized (using Group 11 reference select) to also allow modification in the remote control mode.

PARAMETERS MODE

The Parameters mode is used to change the parameters on the drive. To change parameters, perform the following procedure:

1. Select MENU (SOFT KEY 2). The Main menu will be displayed.
2. Use the UP or DOWN keys to highlight PARAMETERS on the display screen and press ENTER (SOFT KEY 2).
3. Use the UP or DOWN keys to highlight the desired parameter group and press SEL (SOFT KEY 2).
4. Use the UP or DOWN keys to highlight the desired parameters and press EDIT (SOFT KEY 2).
5. Use the UP or DOWN keys to change the value of the parameters.
6. Press SAVE (SOFT KEY 2) to store the modified value. Press CANCEL (SOFT KEY 1) to keep the previous value. Any modifications that are not saved will not be changed.
7. Choose another parameter or press EXIT (SOFT KEY 1) to return to the listing of parameter groups. Continue until all the parameters have been configured and then press EXIT (SOFT KEY 1) to return to the main menu.

NOTE: The current parameter value appears above the highlighted parameter. To view the default parameter value, press the UP and DOWN keys simultaneously. To restore the default factory settings if a drive fails, download the parameters to the VFD from the control panel. Parameters can also be changed individually.

CHANGED PARAMETERS MODE

The Changed Parameters mode is used to view and edit recently changed parameters on the drive. To view the changed parameters, perform the following procedure:

1. Select MENU (SOFT KEY 2). The Main menu will be displayed.
2. Use the UP or DOWN keys to highlight CHANGED PAR on the display screen and press ENTER (SOFT KEY 2). A list of the recently changed parameters will be displayed.
3. Use the UP or DOWN keys to highlight the desired parameter group and press EDIT (SOFT KEY 2) to change the parameters if desired.
4. Press EXIT (SOFT KEY1) to exit the Changed Parameters mode.

DRIVE PARAMETER BACKUP MODE

The Drive Parameter Back-up mode is used to store the drive parameters. The parameters can be uploaded from a VFD to the removable control panel. If a drive failure occurs, the control panel can then be transferred to the new drive and the parameters downloaded into memory.

Each drive is custom programmed at the factory. The first option is to download all parameters. This copies both application and motor parameters to the drive from the control panel. This is recommended to create a backup of the parameters group for the drive.

The second option downloads only the application parameters to the drive. Parameters 9905, 9906, 9907, 9908, 9909, 1605, 1607, 5201, and group 51 parameters and internal motor parameters are not copied.

UPLOAD ALL PARAMETERS

To upload and store all parameters to the control panel from the VFD, perform the following procedure:

1. Select MENU (SOFT KEY 2). The Main menu will be displayed.
2. Use the UP or DOWN keys to highlight PAR BACKUP on the display screen and press ENTER (SOFT KEY 2).
3. Use the UP or DOWN keys to highlight UPLOAD TO PANEL and press SEL (SOFT KEY 2).
4. The text “Copying Parameters” will be displayed with a progress indicator. To stop the process, select ABORT (SOFT KEY 1).
5. When the upload is complete, the text “Parameter upload successful” will be displayed.
6. The display will then return to the PAR BACKUP menu. Select EXIT (SOFT KEY 1) to return to the main menu.
7. The control panel can now be disconnected from the drive.

DOWNLOAD ALL PARAMETERS

To download all parameters from the control panel to the VFD, perform the following procedure:

1. Install the control panel with the correct parameters onto the replacement VFD.
2. Select MENU (SOFT KEY 2). The Main menu will be displayed.
3. Use the UP or DOWN keys to highlight PAR BACKUP on the display screen and press ENTER (SOFT KEY 2).
4. Use the UP or DOWN keys to highlight DOWNLOAD TO DRIVE ALL and press SEL (SOFT KEY 2).
5. The text "Restoring Parameters" will be displayed with a progress indicator. To stop the process, select ABORT (SOFT KEY 1).
6. When the download is complete, the text "Parameter download successful" will be displayed.
7. The display will then return to the PAR BACKUP menu. Select EXIT (SOFT KEY 1) to return to the main menu.
8. The control panel can now be disconnected from the drive.

CLOCK SET MODE

The Clock Set mode is used for setting the date and time for the internal clock of the VFD. In order to use the timer functions of the VFD control, the internal clock must be set. The date is used to determine weekdays and is visible in the fault logs.

To set the clock, perform the following procedure:

1. Select MENU (SOFT KEY 2). The Main menu will be displayed.
2. Use the UP or DOWN keys to highlight CLOCK SET on the display screen and press ENTER (SOFT KEY 2). The clock set parameter list will be displayed.
3. Use the UP or DOWN keys to highlight CLOCK VISIBILITY and press SEL (SOFT KEY 2). This parameter is used to display or hide the clock on the screen. Use the UP or DOWN keys to change the parameter setting. Press OK (SOFT KEY 2) to save the configuration and return to the Clock Set menu.
4. Use the UP or DOWN keys to highlight SET TIME and press SEL (SOFT KEY 2). Use the UP or DOWN keys to change the hours and minutes. Press OK (SOFT KEY 2) to save the configuration and return to the Clock Set menu.
5. Use the UP or DOWN keys to highlight TIME FORMAT and press SEL (SOFT KEY 2). Use the UP and DOWN keys to change the parameter setting. Press OK (SOFT KEY 2) to save the configuration and return to the Clock Set menu.
6. Use the UP or DOWN keys to highlight SET DATE and press SEL (SOFT KEY 2). Use the UP or DOWN keys to change the day, month, and year. Press OK (SOFT KEY 2) to save the configuration and return to the Clock Set menu.
7. Use the UP or DOWN keys to highlight DATE FORMAT and press SEL (SOFT KEY 2). Use the UP or DOWN keys to change the parameter setting. Press OK (SOFT KEY 2) to save the configuration and return to the Clock Set menu.
8. Press EXIT (SOFT KEY 1) twice to return to the main menu.

I/O SETTINGS MODE

The I/O Settings mode is used for viewing and editing the I/O settings.

To configure the I/O settings, perform the following procedure:

1. Select MENU (SOFT KEY 2). The Main menu will be displayed.
2. Use the UP or DOWN keys to highlight I/O SETTINGS on the display screen and press ENTER (SOFT KEY 2). The I/O Settings parameter list will be displayed.
3. Use the UP or DOWN keys to highlight the desired I/O setting and press SEL (SOFT KEY 2).
4. Use the UP or DOWN keys to select the parameter to view. Press OK (SOFT KEY 2).
5. Use the UP or DOWN keys to change the parameter setting. Press SAVE (SOFT KEY 2) to save the configuration. Press CANCEL (SOFT KEY 1) to keep the previous value. Any modifications that are not saved will not be changed.
6. Press EXIT (SOFT KEY 1) twice to return to the main menu.

ACH580 Control Panel

This section contains instructions for removing and reinstalling the assistant control panel and briefly describes the display, keys and key shortcuts.

REMOVING AND REINSTALLING THE CONTROL PANEL

To remove the control panel, press down on the retaining clip at the top and pull it forward from the top edge. See Fig. 133.

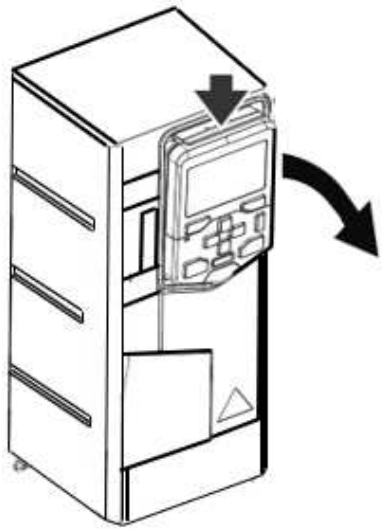

Fig. 133 — Remove the Control Panel

To reinstall the control panel, put the bottom of the container in position, press the retaining clip along the top edge and push the control panel in at the top edge.

LAYOUT OF THE CONTROL PANEL DISPLAY

See Fig. 134 and 135 for a brief description of the display, keys and key shortcuts. In most views, the following elements are shown on the display:

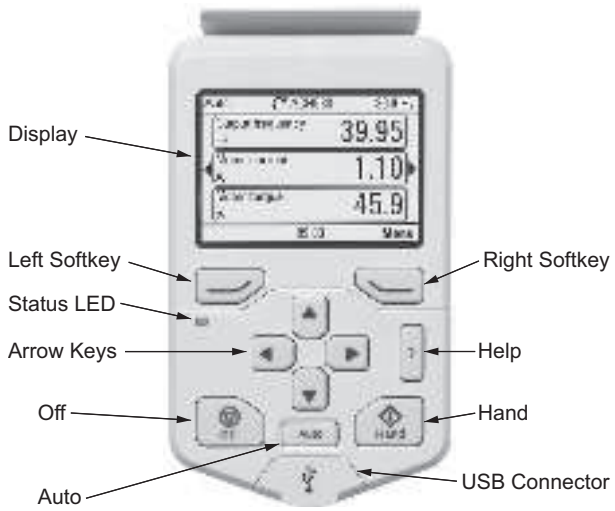

Fig. 134 — Layout of the Control Panel

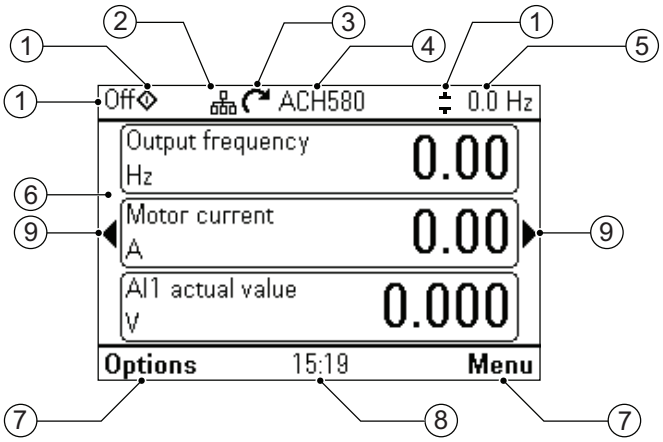

Fig. 135 — Example Home View (Default)

1. **Control location and related icons:** Indicates how the drive is controlled:
   - **No text:** The drive is in local control, but controlled from another device. The icons in the top pane indicate which actions are allowed:

Text/Icons	Starting from this control panel	Stopping from this control panel	Giving reference from this control panel
	Not allowed	Not allowed	Not allowed

   - **Local:** The drive is in local control, and controlled from this control panel. The icons in the top pane indicate which actions are allowed:

Text/Icons	Starting from this control panel	Stopping from this control panel	Giving reference from this control panel
Off	Allowed	Drive is stopped	Not allowed
Hand	Allowed	Allowed	Allowed

   - **External:** The drive is in external control (i.e., controlled through I/O or fieldbus).The icons in the top pane indicate which actions are allowed with the control panel:

Text/Icons	Starting from this control panel	Stopping from this control panel	Giving reference from this control panel
Auto	Allowed[a]	Allowed[a]	Not allowed
Auto	Not allowed	Allowed	Allowed

NOTE(S):

a. This action can be Not allowed by changing parameters HAND/OFF disable source and HAND/OFF disable action. See the latest ACH580 manual for additional information.

2. **Panel bus:** Indicates that there are more than one drive connected to this panel. To switch to another drive, go to *Options > Select drive*.
3. **Status icon:** Indicates the status of the drive and the motor. The direction of the arrow indicates forward (clockwise) or reverse (counter-clockwise) rotation.

Status Icon	Animation	Drive Status
	—	Stopped
	—	Stopped, start inhibited
	Blinking	Stopped, start command given but start inhibited. See *Menu > Diagnostics* on the control panel
	Blinking	Faulted
	Blinking	Running, at reference, but the reference value is 0
	Rotating	Running, not at reference
	Rotating	Running, at reference
	—	Preheating (motor heating) active
	—	PID sleep mode active

4. **Drive name:** If a name has been given, it is displayed in the top pane. By default, it is "ACH580". You can change the name on the control panel by selecting *Menu > Primary settings > Clock, region, display* (see page 167).
5. **Reference value:** Speed, frequency, etc. is shown with its unit. For information on changing the reference value in the Primary settings menu see the latest ACH580 setup and installation manual.
6. **Content area:** The actual content of the view is displayed in this area. The content varies from view to view. The example view (see Fig. 135) is the main view of the control panel which is called the Home view.
7. **Softkey selections:** Displays the functions of the softkeys (and) in a given context.

8. **Clock:** The clock displays the current time. You can change the time and time format on the control panel by selecting *Menu > Primary settings > Clock, region, display* (see page 167).
9. **Side arrows:** When side arrows are visible, you can browse other Home views with the arrow keys (◀ and ▶).

You can adjust the display contrast and back light functionality on the control panel by selecting *Menu > Primary settings > Clock, region, display* (see page 167).

HOME VIEW DISPLAYS

There are eight different Home view displays. In addition, there are six pre-configured IPC Home views, Table 38 (See "IPC additional Home view displays" on page 164.).

Home view 1 is the default Home view. You can browse them with the arrow keys (◀ and ▶). To edit Home views, press the Option softkey ( ), See "Options menu" on page 168.

Table 38 — Home View Displays (1 – 8)[a]

Home view 1 (default Home view): • Output frequency (Hz): Parameter 01.06 Output frequency • Motor current (A): Parameter 01.07 Motor current • AI1 actual value (V or mA): Parameter 12.11 AI1 actual value	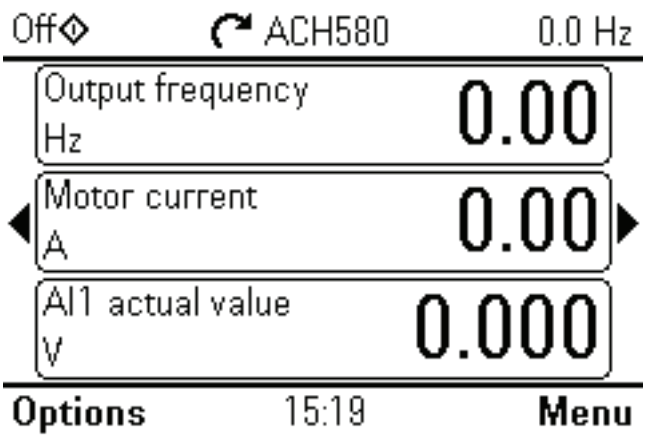
Home view 2: • Saved amount (Local currency): Parameter 45.07 Saved amount • Saved energy (kWh): Parameter 45.04 Saved energy • Total saved CO2 (metric ton): 45.09 CO2 reduction in tons	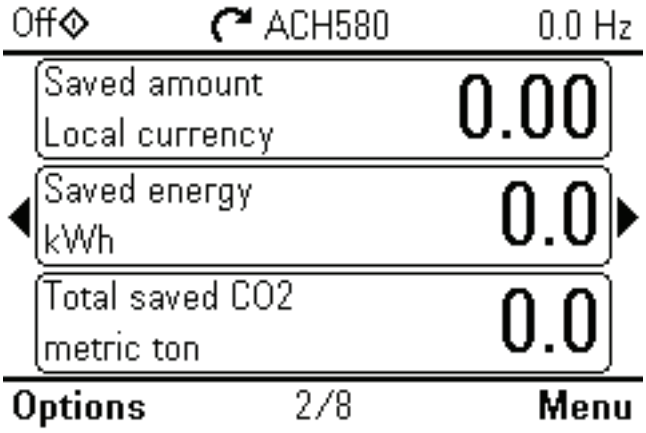
Home view 3: • Output frequency shown as a graphical representation during the last 60 minutes: Parameter 01.06 Output frequency	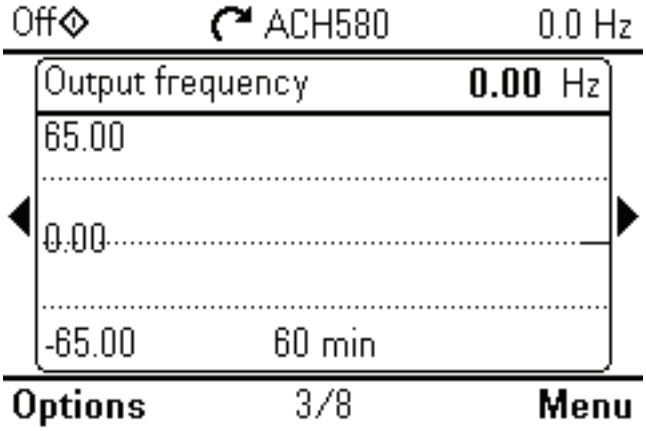

Table 38 — Home View Displays (1 – 8)[a] (cont)

Home view 4: • Output power shown as a graphical representation during the last 60 minutes: Parameter 01.14 Output power	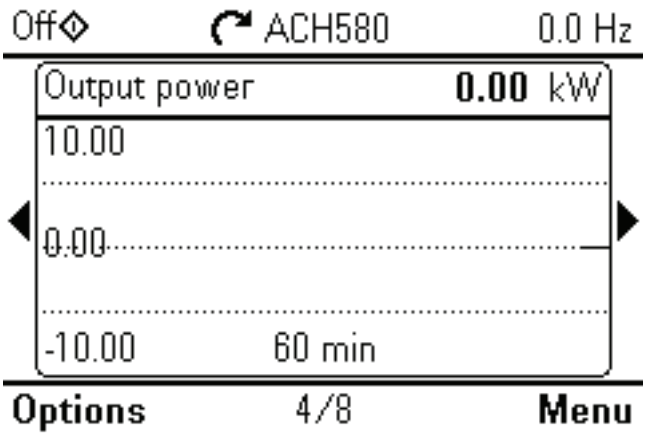
Home view 5: • Control board temperature (°C): Parameter 05.10 Control board temperature • Inverter temperature (%): Parameter 05.11 Inverter temperature • DC voltage (V): Parameter 01.11 DC voltage	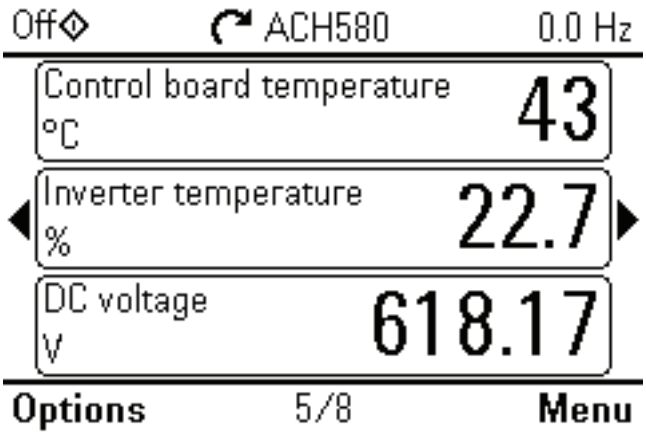
Home view 6: • On-time counter (days): Parameter 05.01 On-time counter • Run-time counter (days): Parameter 05.02 Runtime counter	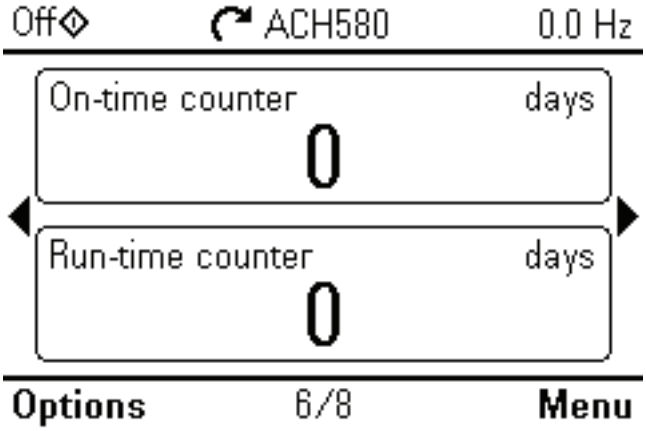

Table 38 — Home View Displays (1 – 8)[a] (cont)

Home view 7: • DI delayed status, that is, status of DI6…DI1 (DI1 is bit 0, the rightmost bit): Parameter 10.02 DI delayed status • RO status, that is, status of RO3…RO1 (RO1 is bit 0, the rightmost bit): Parameter 10.21 RO status • Communication diagnostics: Parameter 58.07 Communication diagnostics	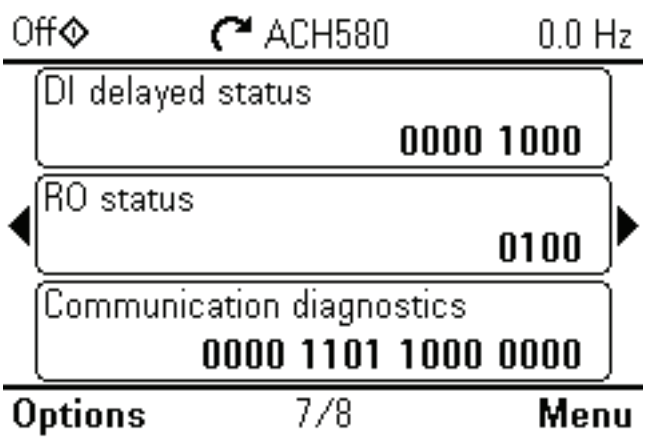
Home view 8: • Process PID setpoint actual (PID unit 1): Parameter 40.03 Process PID setpoint actual • Process PID feedback actual (PID unit 1): Parameter 40.02 Process PID feedback actual • Output frequency (Hz): Parameter 01.06 Output frequency	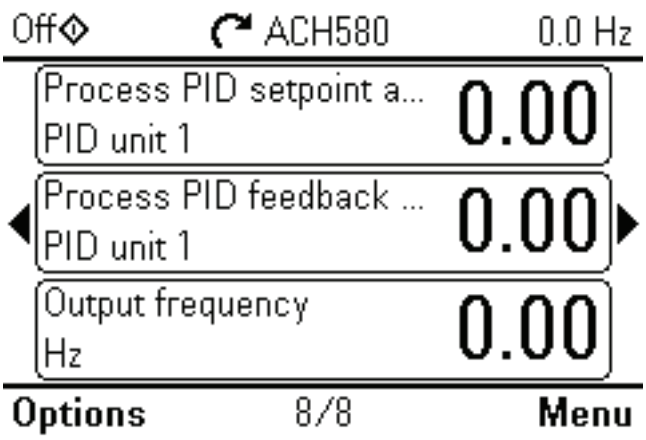

NOTE(S):

a. For more detailed information on the specific parameters for each view, consult the latest version of the ABB ACH580 VFD manual.

IPC ADDITIONAL HOME VIEW DISPLAYS

There are six pre-configured IPC Home views. See Table 39. You can browse them with the arrow keys (◀ and ▶). See Table 39. To edit Home views, press the Option softkey (▭), See “Options menu” on page 168.

Table 39 — IPC Additional Home View Displays (1 – 6)[a]

IPC Home view 1 (default IPC Home view): • Output frequency (Hz): Parameter 01.06 Output frequency • Process feedback (bar): Parameter 40.02 Process PID feedback actual • Multipump system status: Parameter 76.02 Multipump system status	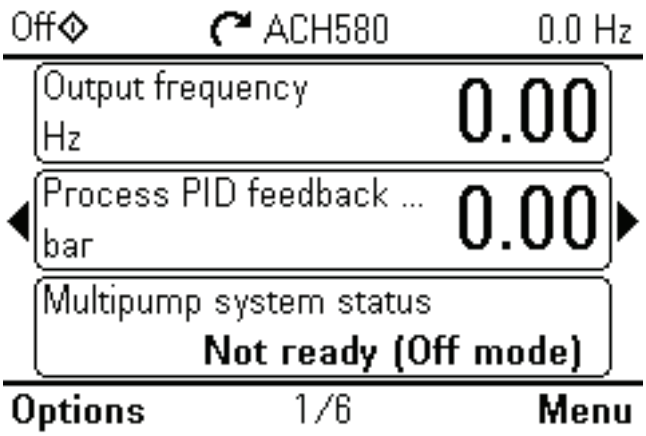

Table 39 — IPC Additional Home View Displays (1 – 6)[a] (cont)

IPC Home view 2: • Multipump node number: Parameter 76.22 Multipump node number • IPC synchronization checksum: Parameter 76.105 IPC synchronization checksum • IPC online pumps: Parameter 76.01 PFC status	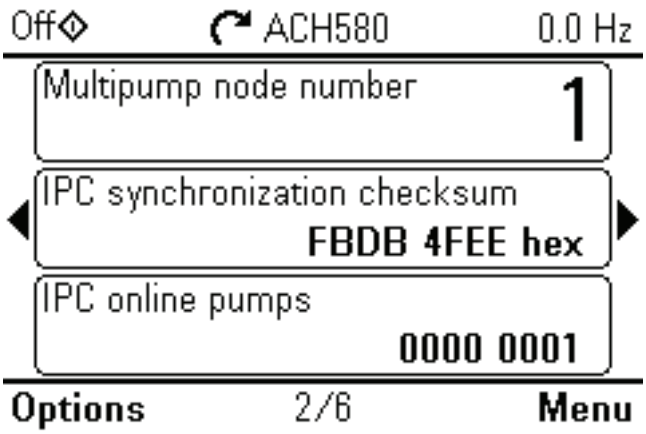
IPC Home view 3: • Pump 1 running time: Parameter 77.11 Pump/fan 1 running time • Pump 2 running time: Parameter 77.12 Pump/fan 2 running time • Pump 3 running time: Parameter 77.13 Pump/fan 3 running time	
IPC Home view 4: • Pump 4 running time: Parameter 77.14 Pump/fan 4 running time • Pump 5 running time: Parameter 77.15 Pump/fan 5 running time • Pump 6 running time: Parameter 77.16 Pump/fan 6 running time	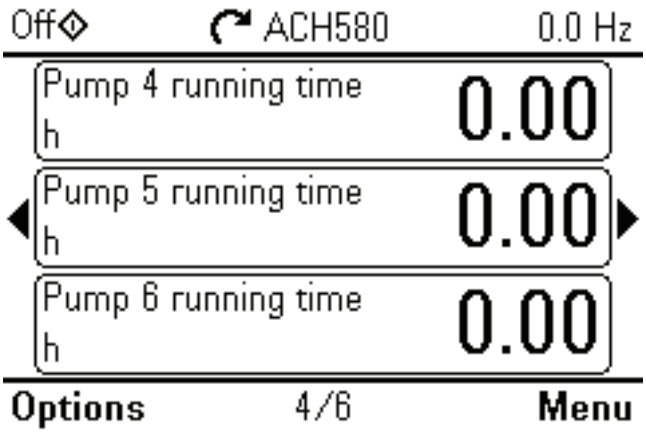

Table 39 — IPC Additional Home View Displays (1 – 6)[a] (cont)

IPC Home view 5: • Pump 7 running time: Parameter 77.17 Pump 7 running time • Pump 8 running time: Parameter 77.18 Pump 8 running time	
IPC Home view 6: • Output frequency (Hz): Parameter 01.06 Output frequency • Motor current (A): Parameter 01.07 Motor current • Motor torque (%): Parameter 01.10 Motor torque	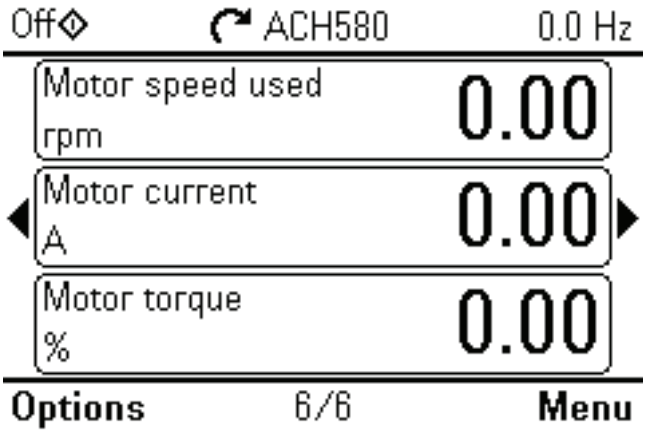

NOTE(S):

a. For more detailed information on the specific parameters for each view, consult the latest version of the ABB ACH580 VFD manual.

KEYS

The keys of the control panel are described in Fig. 136.

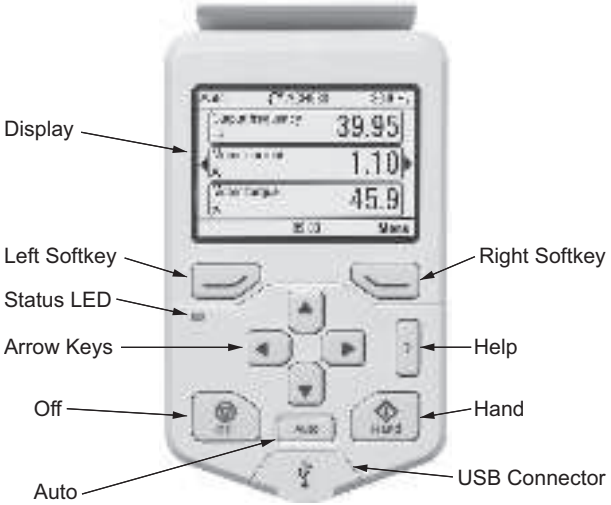

Fig. 136 — Layout of the Control Panel

Left softkey

The left softkey ( ) is usually used for exiting and canceling. Its function in a given situation is shown by the softkey selection in the bottom left corner of the display.

Holding down exits each view in turn until you are back in the Home view. This function does not work in special screens.

Right softkey

The right softkey ( ) is usually used for selecting, accepting and confirming. The function of the right softkey in a given situation is shown by the softkey selection in the bottom right corner of the display.

The arrow keys

The up and down arrow keys (and) are used to highlight selections in menus and selection lists, to scroll up and down on text pages, and to adjust values when, for example, setting the time, entering a passcode or changing a parameter value.

The left and right arrow keys (and) are used to move the cursor left and right in parameter editing and to move forward and backward in assistants. In menus, the arrow keys (and) function the same way as the softkeys (and), respectively.

Help

The help key ( ) opens a help page. The help page is context-sensitive, in other words, the content of the page is relevant to the menu or view in question.

Hand, Off and Auto

The ACH580 can be in local or external control. The local control has two modes: Hand and Off. For additional information, see latest version of the ACH580 manual.

Hand key ( ):

- In local control / Off mode: Starts the drive. The drive will switch to the Hand mode.
- In external control: Switches the drive to local control / Hand mode, keeping it running.

Off key ( ):

- Stops the drive and switches to the Off mode.

Auto key (Auto):

- In local control: The drive will switch to external control.

KEY SHORTCUTS

Table 40 lists key shortcuts and combinations. Simultaneous key presses are indicated by the plus sign (+).

Table 40 — Key Shortcuts

SHORTCUT	AVAILABLE IN	EFFECT
+ +	Any view	Save a screenshot. Up to fifteen images may be stored in the control panel memory. To transfer images to PC, connect the assistant control panel to PC with a USB cable and the panel will mount itself as an MTP (media transfer protocol) device. Pictures are stored in the screenshots folder.
+ , +	Any view	Adjust backlight brightness.
+ , +	Any view	Adjust display contrast.
or	Home view	Adjust reference.
+	Parameter edit views	Revert an editable parameter to its default value.
+	View showing a list of selections for a parameter	Show/hide selection index numbers.
(keep down)	Any view	Return to the Home view by pressing down the key until the Home view is shown.

CLOCK, REGION, DISPLAY

The *Clock, region, display* submenu contains settings for language, date and time, display (such as brightness) and settings for changing how information is displayed on screen. See Fig. 137.

Table 41 provides detailed information about the available setting items in the *Clock, region, display* submenu.

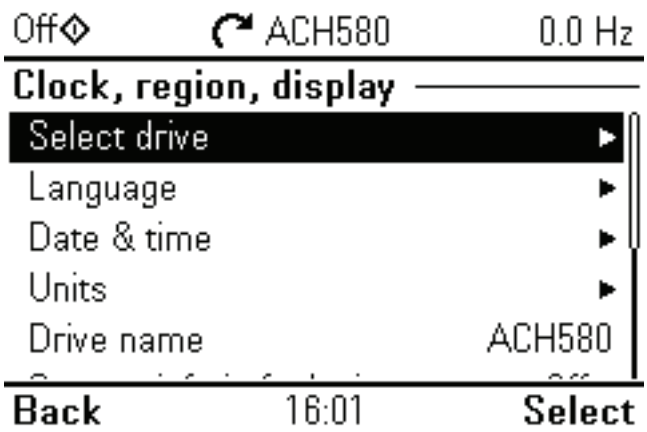

Fig. 137 — Clock, Region, Display View

Table 41 — Clock, Region, Display Settings

MENU ITEM	DESCRIPTION
Selected Drive	If more than one drive is connected to this control panel, select the drive to be controlled here. To see the other drives, set Panel bus to “On” and enable networking in the parameters of each drive.
Language	Change the language used on the control panel screen. Note that the language is loaded from the drive so this takes some time. Corresponding parameter: 96.01 Language[a]. Available languages vary depending on the drive firmware language package installed: Standard language package, European language package or Asian language package. *Parameter 07.10 Language file set shows the language package in use*[a].
Date & Time	Set the time and date, and their formats.
Units	Select the units used for power, temperature, torque and currency. Corresponding parameter 96.16 Unit selection[a].
Drive Name	The drive name defined in this setting is shown in the PC tool and at the status bar at the top of the control panel screen while using the drive. If more than one drives are connected to the control panel, the drive names make it easy to identify each drive. It also identifies any backups you create for this drive.
Contact info in fault view	Define a fixed text that is shown during any fault (for example, who to contact in case of a fault). If a fault occurs, this information appears on the control panel screen (in addition to the fault-specific information).
Edit texts	Set the drive name, adjust currency unit and PID unit, and edit Start interlocks 1–4, Run permissive, Signal supervisions 1–3, External events 1–3, Contact info.
Display settings	Adjust the brightness, contrast and display power save delay of the control panel screen or to invert white and black.
Show in lists	Show or hide the numeric IDs of: • parameters and groups • option list items • bits • devices in *Options > Select drive*
Edit home view	Select the parameters displayed in the Home view, with display style, decimals, name, unit, minimum and maximum.
Show inhibit pop-up	Enables or disables pop-up views showing information on inhibits, for example, when you try to start the drive but it is prevented.

NOTE(S):

a. For more detailed information on the specific parameters for each view, consult the latest version of the ABB ACH580 VFD manual.

OPTIONS MENU

To go to the *Options* menu, press the *Options* softkey ( ) in any of the Home view displays. The table below provides information about the different options available in the *Options* menu. (See Fig. 138 and Tables 42 and 43.)

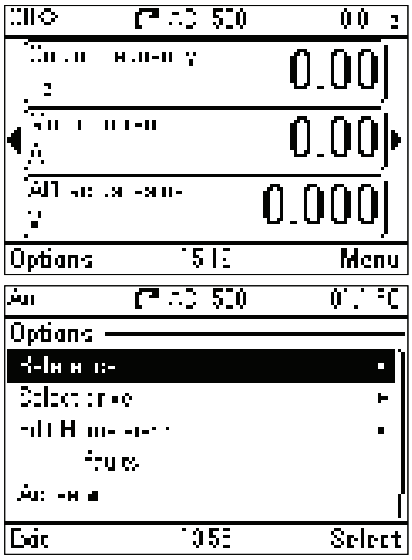

Fig. 138 — Options Menu

Table 42 — Menu Discriptions

MENU ITEM	DESCRIPTION
Reference	You can change the reference, which is visible on the top right corner of the panel displays.
Direction change	Alters the sign of active reference between positive and negative. Absolute value of reference is not changed.
Select drive	You can select a drive that you want to monitor or control from the list of drives showing the drives connected on the panel bus. You can also clear the list of drives.
Edit Home view	You can edit the Home view displays. Scroll with the arrow keys (◀ and ▶) to the Home view you want to edit. Select the display slot, that is, which of the current parameter(s) you want to edit (Home views show one to three parameters). Edit the parameter and how you want to display it. 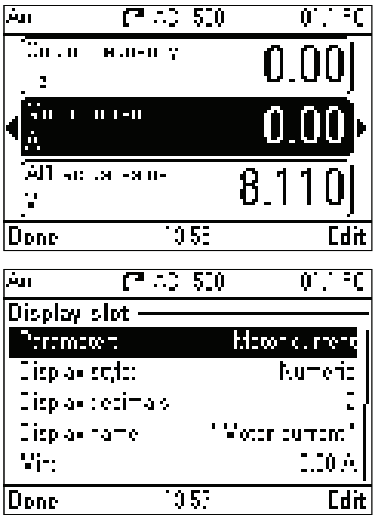
Active faults	Shows the active faults
Active warnings	Shows the active warnings
Active inhibits	Shows the active inhibits

Table 43 — Terms and Abbreviations

TERM	ABBREVIATION
Actual signal	Type of parameter that is the result of a measurement or calculation by the drive, or contains status information. Most actual signals are read-only, but some (especially counter-type actual signals) can be reset.
Def	The default value of a parameter when used in the default configuration.
FbEq16	(In the following table, shown on the same row as the parameter range, or for each selection) 16-bit fieldbus equivalent: The scaling between the value shown on the control panel and the integer used in communication when a 16-bit value is selected for transmission to an external system. A dash (-) indicates that the parameter is not accessible in 16-bit format. Note: Any scaled value that exceeds 32767 will be clamped at 32767 when reading with a 16 bit system.
Other	The value is taken from another parameter. Choosing “Other” displays a parameter list in which the user can specify the source parameter.
Other [bit]	The value is taken from a specific bit in another parameter. Choosing “Other” displays a parameter list in which the user can specify the source parameter and bit.
Parameter	Either a user-adjustable operating instruction for the drive, or an actual signal.
p.u.	Per unit
[parameter number]	Value of the parameter

ABB E-Clipse Bypass Operator Control

ACH550 CONTROL PANEL WIRING

The ACH550 control panel is a keypad with an LCD unit that provides status indication and operator controls for the ACH550 drive, see Fig. 139. In normal operation with the ABB E-Clipse bypass, the ACH550 should be placed in the *Auto* model of operation by pressing the *Auto* key on the ACH550 control panel. Refer to the ACH550 User’s Manual for additional information on the ACH550 Control Panel and other aspects of ACH550 operation.

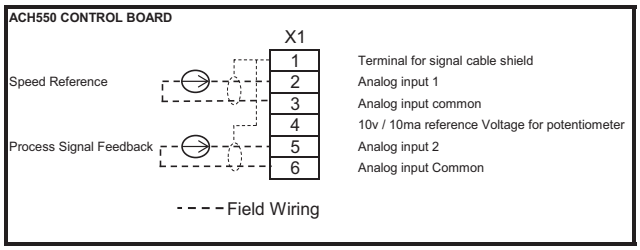

Fig. 139 — ACH550 Control Board Wiring

BYPASS CONTROL KEYPAD AND CONTROL BOARD WIRING

The ABB E-Clipse bypass has a separated keypad with an LCD unit that provides status indication and programming of the system. This keypad is also used for selecting the *Drive* or *Bypass* mode. The bypass keypad has LED indicating lights that indicate the status of both the bypass and the drive as well as an LCD display that provides programming, status and warning/fault indications. See Fig. 140 for wiring of the E-Clipse bypass control board.

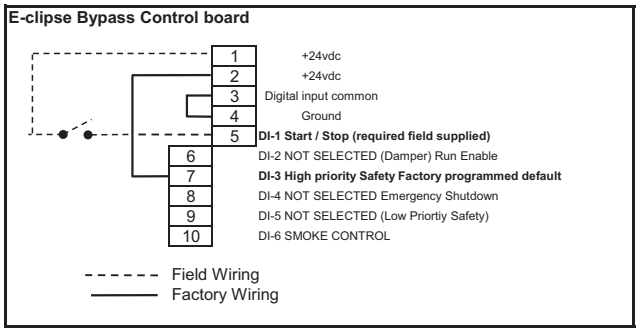

Fig. 140 — E-Clipse Bypass Control Board Wiring

Figure 142 below shows the bypass control keypad and identifies the functions of the various keys and LED indicating lights.

SMOKE CONTROL MODE

In the Smoke Control (Override 1) mode, the motor is powered by AC line power through the bypass contactor. The source of the Smoke Control command is DI 6 and is unaffected by external stop commands. The VFD Keypad and the Bypass Keypad will not accept user commands when the system is in *Smoke Control* mode (the keypad user inputs are disabled). The user can switch to the Smoke Control mode by closing the *Smoke Control* input contact (DI 6). When the *Smoke Control* input contact is closed, the system is forced to bypass and runs the motor. The Motor Run LED flashes green when the system is in override. While in *Smoke Control*, the system only responds to certain inputs. Normally, when the *Smoke Control* input contact is switched from closed to open, the system returns to the operating mode that existed prior to entering *Smoke Control* and can once again be controlled using the *Drive* and *Bypass* keys. The exception to this is when the *Bypass Override (Override 2)* input contact is closed, in which case the system switches to *Bypass Override* operation. See Fig. 141 for typical wiring diagram.

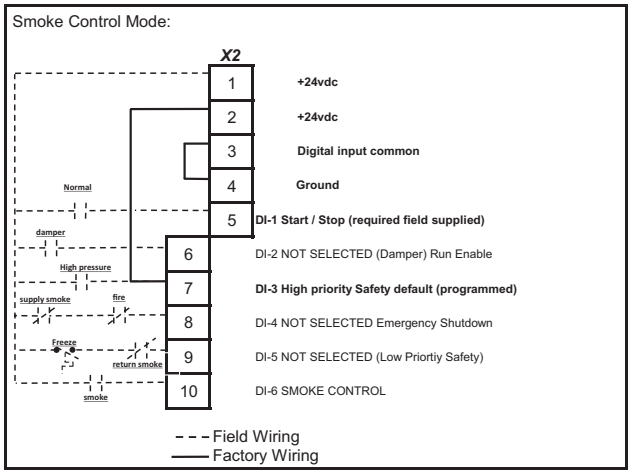

Smoke Control Mode: Close contact on X2:10/fan starts regardless of position of internal HOA switch and inputs X2:5 and X2:9/Inputs X2:6, 7 and 8 followed when configured. Internal overloads followed.

Fig. 141 — Smoke Detector Typical Wiring Diagram

PROGRAMMABLE RELAY CONTACT OUTPUTS

The ABB E-Clipse bypass has 5 programmable relay outputs as standard, see Fig. 140. The default programming descriptions for these relay outputs is described below.

BYPASS NOT FAULTED

The *Bypass Not Faulted* relay is energized during normal operation. The *Bypass Not Faulted* relay is de-energized when a bypass fault has occurred.

SYSTEM RUNNING

The *System Running* relay is energized when the ABB E-Clipse bypass System is running. The *System Running* relay provides an output when the motor is running whether powered by the ACH550 drive or the bypass.

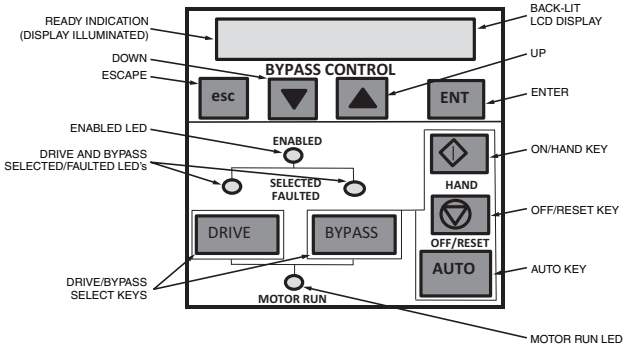

KEY/LED	DESCRIPTION
On/Hand Key	The *On/Hand* key can be used to manually start the motor when the bypass has been selected as the power source for the motor.
Off/Reset Key	The *Off/Reset* key may be used to manually stop the motor if the motor is running on bypass power. The *Off/Reset* key also resets most bypass Faults. It may take several minutes before the bypass can be reset after an overload trip. If a bypass fault condition is present, the second push of the *Off/Reset* key puts the bypass in the Off mode.
Auto Key	The *Auto* key selects the *Auto Start* contact or serial communications as the means for starting and stopping the motor in the bypass mode.
Motor Run LED	The *Motor Run* LED is illuminated red when the bypass has lost its communications link with the drive or when the motor or drive protection functions have shut down the drive.
Drive Key	The *Drive* key selects the drive as the power source for the motor.
Bypass Key	The *Bypass* key selects the bypass as the power source for the motor.
Drive Selected/ Fault LED	The *Drive Selected* LED is illuminated green when the drive has been selected as the power source for the motor and no drive fault is present. The *Drive Fault* LED is illuminated or flashes red when the motor or bypass protective functions have shut down the drive.
Bypass Selected/ Fault LED	The *Bypass Selected* LED is illuminated green when the bypass has been selected as the power source for the motor and no bypass fault is present. The *Bypass Faulted* LED is illuminated or flashes red when the motor or bypass protective functions have shut down the bypass.
Enabled LED	The *Enabled* LED is illuminated green under the following conditions: • Both the safety interlock(s) and Run Enable contacts are closed. • The Safety Interlock(s) contact are closed with no Start command present The *Enable* LED flashes green if the Run Enable contact(s) are closed and a start command is present. The *Enable* LED is illuminated red when the Safety Interlock contact(s) are open.

Fig. 142 — Bypass Control Keypad Description

SYSTEM STARTED

The *System Started* relay is energized when the ABB E-Clipse bypass system is started. Three conditions must be met in order for the relay to energize:

1. A *Start* command must be present
2. The *Safety Interlock* input contact must be closed and
3. There can be no fault present in the system

BYPASS SELECTED

Relay output four is factory default programmed for Bypass Selected. The relay will be energized anytime the user has placed the system in Bypass Mode.

BYPASS AUTO

Relay Output five is factory default programmed for Bypass Auto. The relay will be energized anytime the user has placed the bypass in the Auto mode.

The complete list of programmable relay output functions follows:

0 = NOT SEL	**14** = BYPASS OFF
1 = SYS READY	**15** = BYPASS AUTO
2 = SYS RUNNING	**16** = COM CTRL
3 = SYS STARTED	**17** = SYS ALARM
4 = BYPASS SEL	**18** = BYPASS FLT/ALM
5 = BYPASS RUN	**19** = BYPASS OVERLOAD
6 = BYPASS FLT	**20** = BYP UNDERLD
7 = BYP NOT FLT	**21** = PCB OVERTEMP
8 = BYPASS ALRM	**22** = SYS UNDERLD
9 = DRIVE FAULT	**23** = SYSTEM FLT
10 = DRV NOT FLT	**24** = SYS FLT/ALM
11 = DRIVE ALARM	**25** = SYS EXT CTL
12 = OVERRIDE	**26** = SYS OVERLD
13 = BYPASS HAND	**27** = CONTACT FLT

The *Start* command can come from the bypass control board terminal block, the ACH550 keypad, the bypass keypad, or serial communications depending on the operational mode selected. The *System Started* relay is ideal for use in damper actuator circuits, opening the dampers only under those conditions where the system is preparing to run the motor. The *System Started* relay will de-energize, closing the dampers if the safeties open, the system faults, or when a *Stop* command is issued.

Electric Heaters

Electric heaters are factory installed. If circumstances require field installation of an electric heater, it can only be installed in a factory-supplied EHS (Electric Heat section). Installation of electric heat in a section other than an EHS section will void the UL listing of the product.

1. Identify ALL electrical power supplies serving the unit, lock off and tag each before working on the unit.
2. Locate the electric heat section mounted on the unit and remove the protective shipping cover.
3. Identify the electric heater and verify that the heater matches the unit. Unit hand and heater hand must also agree.
4. Properly sized power wiring and control wiring entry holes are provided in the upstream sidewall of the heater control box.

   For outdoor unit sizes 36-110 only, a narrow, fixed upstream panel is provided for electrical power entry from the outside. Power may also enter the unit from below, penetrating the floor of the unit. Carefully seal all entries, weather tight where necessary. Control wiring may enter the same way as electrical wiring.

   Take future service requirements into account when locating field power entry holes in the unit casing.
5. Sleeve these holes and seal around the conduit to preserve the integrity of the casing. In some cases, it might be preferable for the power to actually enter the cabinet through an adjacent section, or enter the control box from another angle, which is acceptable.
6. If the original holes are not used, they must be appropriately plugged.
7. Insert the electric heater into the section (the heater element rack will be located along the leaving air side of the section).

NOTE: If the heater must be hoisted into position, once the top panel has been removed to a safe place, the horizontal top rail may be removed by carefully removing the flat corner plug from the end corner pieces and extracting the screw visible within the exposed cavity. (Do not mix these screws with others, as they are specific for this location.) The corners may then be separated, lifting the rail and corner segments away from the unit at approximately a 45-degree angle, taking care not to damage the double bulb seal.

8. The heater has lifting hook openings on each end. When the heater is within 3 in. of its final position, reinstall the crossrail with the box-seal facing down and the panel seal toward the top.
9. Secure the heater to the section posts and rails with the furnished screws, drawing it the last 3/8 in. into final sealed position against the framework, by alternately cross tightening the screws. The opposite end of the heater rests on lateral spacers provided on the floor panel, and is retained by a screw through an angle clip on the last one or by an upright corner flange.
10. Replace the top panel, and proceed to complete the wiring in accord with all applicable codes and ordinances. The wiring diagram is fastened inside the control box, with a spare, loose copy provided as a convenience for maintenance manual preparation. Do not mix the wiring diagrams, as they are specific for each unit.
11. Connect power and control wiring according to the wiring diagram supplied (see Fig. 143-145 for typical wiring details).

CONNECT POWER AND CONTROL WIRES

Heater wiring schematic is located on control box panel. Verify that minimum airflow requirement (minimum coil face velocity, fpm) will be met, especially on applications where variable air volume is supplied.

Use copper power supply wires rated for 75 C minimum. On 250 v or greater applications, use 600 v rated wiring. Size wires to carry 125% of current load on each set of terminals. Use the following formulas as required:

$$\text{Single-phase line current} = \frac{(\text{kW per set of terminals})\,(1000)}{\text{voltage}}$$

$$\text{Three-phase line current} = \frac{(\text{kW per set of terminals})\,(1000)}{(\text{voltage})\,(1.73)}$$

Note that if the heater is rated at 50 kW (or more) and is controlled by a cycling device such as a multi-stage thermostat, or a step controller, conductors may be sized at 100% of load amperes (see Table 44) per NEC Section 424-22. Heater construction and application information are based upon Space Heating Standard UL No. 1096 and the requirements of the NEC. Installer is responsible for observing local code requirements.

Install a disconnect switch or main circuit breaker in accordance with NEC and other applicable codes. Locate so that it is easily accessible and within sight of heater control box (per NEC Article 424-19 and 424-65).

Weatherproof junction boxes have no knockouts for wire entrance. Provide knockouts for all wiring using field-supplied grommets of correct size and type of conduit as required.

Where field-supplied thermostats are used, isolate circuits to prevent possible interconnection of control circuit wiring.

Where field-supplied step controller is used, connect steps to terminals as marked on wiring schematic. When connecting multi-stage heaters, wire stage no. 1 so that it is first stage on, last stage off.

Provide sufficient clearance for convection cooling of heaters with solid-state controllers. Provide at least 5 in. of free air space above and below cooling fins extending from heater terminal box. Be sure to connect interlock terminals F1 and F2 to auxiliary contacts on fan starter.

Each heater has 2 different types of factory-installed thermal cutouts for over temperature protection: an automatic reset thermal cutout for primary protection, and a manual reset thermal cutout to protect against failure of the primary system. Also provided is an airflow pressure differential switch to prevent the heater from operating when the fan is not in operation or airflow is restricted or insufficient. The primary automatic reset cutout is a bi-metal disk-type cutout. It is wired into the control circuit which operates the magnetic disconnecting contactors (the same contactors that also switch on and off the various steps of the coil). The secondary manual reset cutout is a bi-metal disk-type cutout. This secondary thermal cutout is load carrying and is installed in each heater subcircuit. The primary and secondary overtemperature protection systems are independent of each other. The secondary system is designed to protect against possible failure of the primary system to deenergize the heater.

Subcircuits in the heaters are designed in compliance with paragraph 424-22 of the NEC. The coil is subdivided into circuits that draw no more than 48 amps each and is fused for at least 125% of the circuit rating.

NOTE: Airflow tube is to be positioned so that the airflow switch is actuated by a minimum negative pressure of 0.07 in. wg. In the event that the minimum 0.07 in. wg cannot be achieved, extend the high pressure tube to the next upstream bulkhead to the fan discharge for draw-thru electric heat or extend the low pressure tube to the negative side of the fan for blow-thru electric heat.

Refer to Table 45 for heater electrical data including VAV electric heaters.

Table 44 — Field Wiring for Incoming Conductors Sized for 125% of Heater Load

WIRE SIZE (AWG OR KCMIL)	LOAD AMPS*	WIRE SIZE (AWG OR KCMIL)	LOAD AMPS*
	COPPER		COPPER
14	12	**2/0**	140
12	16	**3/0**	160
10	24	**4/0**	184
8	40	**250**	204
6	52	**300**	228
4	68	**350**	248
3	80	**400**	268
2	92	**500**	304
1	104	**600**	336
1/0	120	**700**	368

LEGEND

AWG — American Wire Gauge
kcmil — Thousand Circular Mils
NEC — National Electrical Code

*Values are based on Table 310-16 of the NEC for 75 C insulated copper wire. Not more than 3 conductors in a raceway.

NOTES:
1. Be sure to consider length of wiring run and possible voltage drops when sizing wires.
2. Field power wiring — Heaters are furnished with a terminal block sized for incoming copper conductors with 75 C insulation rated to carry at least 125% of the heater load. However, conductors can be sized to carry 100% of the heater load if the heater is rated at 50 kW or more, and the heater is controlled by a cycling device such as a multi-stage thermostat, step controller, or SCR (silicon control rectifier) power controller. Terminal blocks and knockouts are sized to handle either 100% or 125% conductors.

SINGLE-POINT POWER (OPTION)

If single-point power option has been requested, power wiring will be factory installed from the electric heater control panel to the unit single-point power enclosure installed on the unit supply fan.

NOTE: Power wiring will then be brought into the SPP box for this option (see the section “START-UP” on page 215).

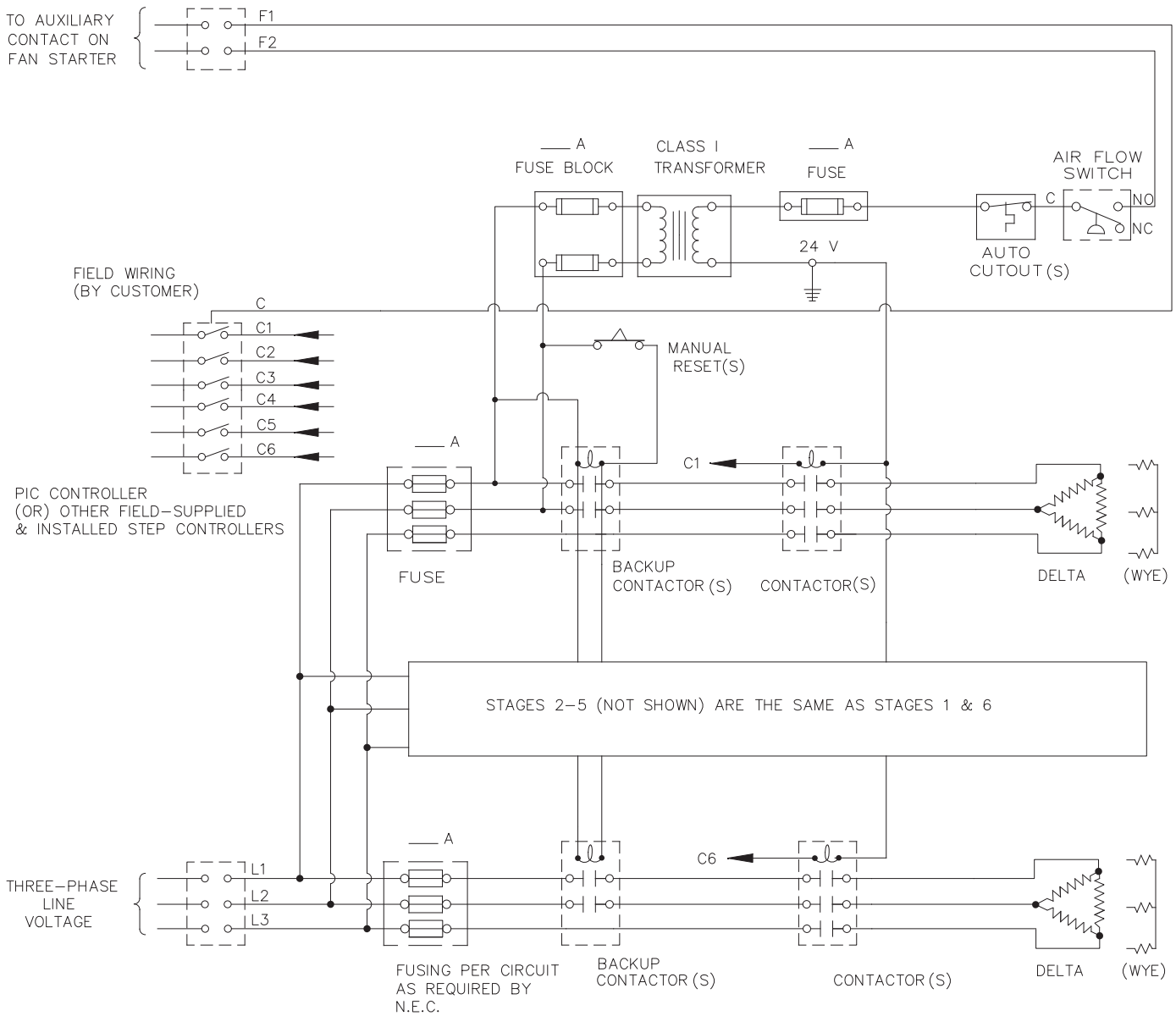

NOTE: All wiring must be copper and must conform to the NEC (National Electrical Code).

Fig. 143 — Electrical Heater Wiring Schematic (Typical)

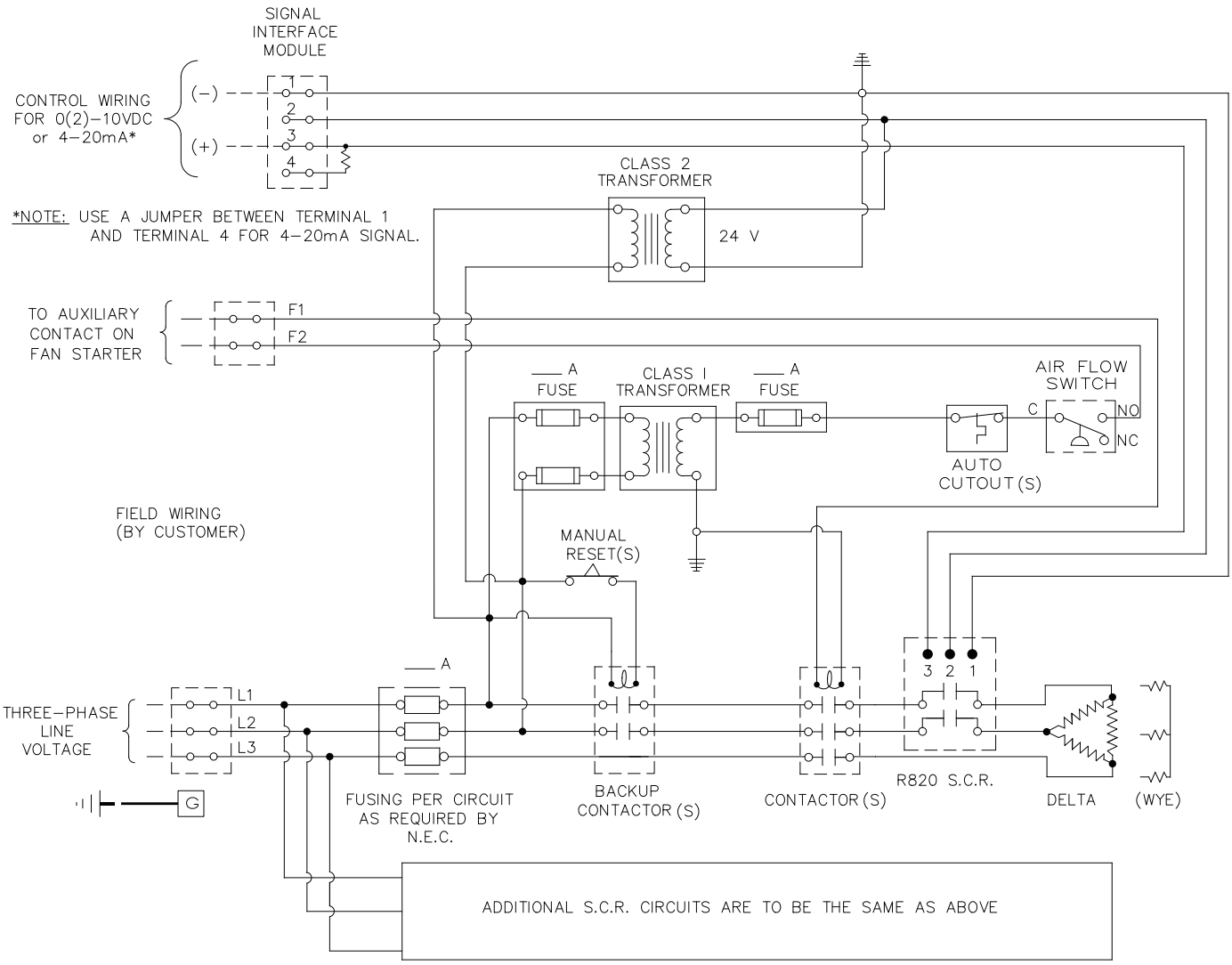

LEGEND

NC — Normally Closed
NEC — National Electrical Code
NO — Normally Open
SCR — Silicon Control Rectifier

Fig. 144 — Full SCR Electric Heat Control

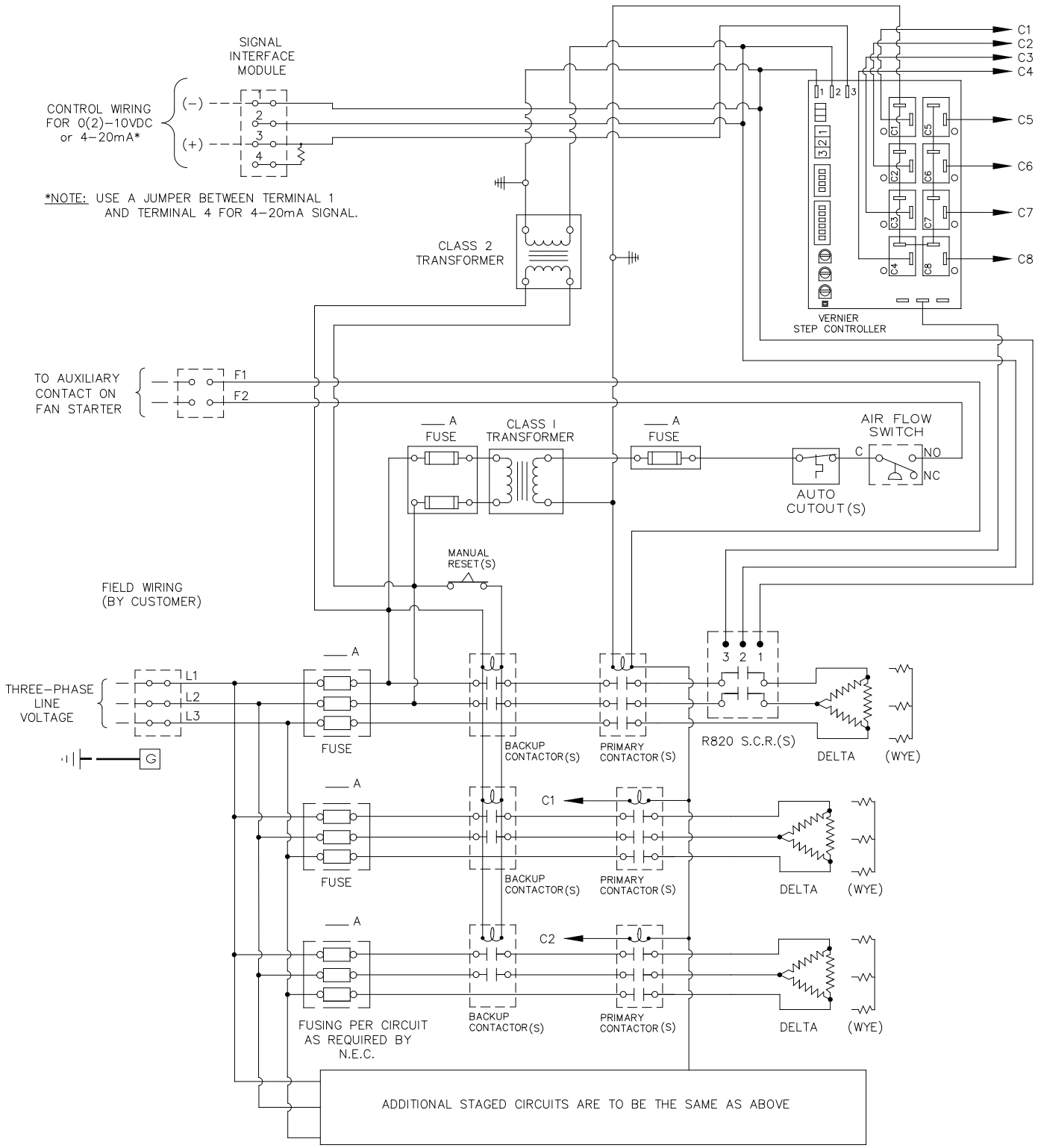

LEGEND

NC — Normally Closed
NEC — National Electrical Code
NO — Normally Open
SCR — Silicon Control Rectifier

NOTE: All wiring must be copper and must conform to NEC.

Fig. 145 — Vernier SCR Electric Heat Control

Table 45 — Electric Heater Data

39M UNIT SIZE	AIRFLOW	FACE AREA	LOW kW EH							HIGH kW EH						
			MIN kW	MAX kW	kW / SQ FT	MAX AMPS	SUB CIRCUITS AT MAX AMPS	CONTROL CIRCUITS AT MAX kW (SEE NOTE 1)	TEMP RISE AT 100% AIRFLOW	MIN kW	MAX kW	kW / SQ FT	MAX AMPS	SUB CIRCUITS AT MAX AMPS	CONTROL CIRCUITS AT MAX kW (SEE NOTE 1)	TEMP RISE AT 100% AIRFLOW
208V, LFA, Open Elements, Standard Controls without Disconnect																
03W	1,500	2.66	5	17	6.4	47	1	3	35.7	18	35	13	97	3	3	73.4
06W	3,000	4.90	10	51	10.4	142	3	3	53.5	52	60	12	167	4	3	62.9
07T	3,500	7.13	10	51	7.2	142	3	3	45.8	52	70	10	195	5	6	62.9
08W	4,000	7.03	20	51	7.3	142	3	3	40.1	52	80	11	222	5	6	62.9
09T	4,500	7.61	20	51	6.7	142	3	3	35.7	52	90	12	250	6	6	62.9
10W	5,000	9.54	20	51	5.3	142	3	3	32.1	52	100	10	278	6	6	62.9
11T	5,500	10.26	20	51	5.0	142	3	3	29.2	52	100	10	278	6	6	57.2
12T	6,000	11.38	20	51	4.5	142	3	3	26.7	52	100	9	278	6	6	52.4
12W	6,000	11.95	20	60	5.0	167	4	3	31.5	61	100	8	278	6	6	52.4
14W	7,000	13.15	30	60	4.6	167	4	3	27.0	61	100	8	278	6	6	44.9
16T	8,000	14.60	30	60	4.1	167	4	3	23.6	61	100	7	278	6	6	39.3
17W	8,500	16.12	30	60	3.7	167	4	3	22.2	61	100	6	278	6	6	37.0
18T	9,000	16.67	30	60	3.6	167	4	3	21.0	61	100	6	278	6	6	35.0
21W	10,500	20.39	40	100	4.9	278	6	6	30.0	—	—	—	—	—	—	—
22T	11,000	21.18	40	100	4.7	278	6	6	28.6	—	—	—	—	—	—	—
25T	12,500	23.45	40	100	4.3	278	6	6	25.2	—	—	—	—	—	—	—
25W	12,500	22.71	40	100	4.4	278	6	6	25.2	—	—	—	—	—	—	—
30T	15,000	29.05	40	100	3.4	278	6	6	21.0	—	—	—	—	—	—	—
30W	15,000	28.68	40	100	3.5	278	6	6	21.0	—	—	—	—	—	—	—
35T	17,500	34.61	60	100	2.9	278	6	6	18.0	—	—	—	—	—	—	—
36W	18,000	37.33	60	100	2.7	278	6	6	17.5	—	—	—	—	—	—	—
37T	18,500	36.24	60	100	2.8	278	6	6	17.0	—	—	—	—	—	—	—
40W	20,000	41.14	60	100	2.4	278	6	6	15.7	—	—	—	—	—	—	—
42T	21,000	41.12	60	100	2.4	278	6	6	15.0	—	—	—	—	—	—	—
50W	25,000	51.65	60	100	1.9	278	6	6	12.6	—	—	—	—	—	—	—
51T	25,500	50.01	60	100	2.0	278	6	6	12.3	—	—	—	—	—	—	—
58T	29,000	56.87	60	100	1.8	278	6	6	10.8	—	—	—	—	—	—	—
61W	30,500	62.01	60	100	1.6	278	6	6	10.3	—	—	—	—	—	—	—
72W	36,000	71.71	60	120	1.7	333	7	6	10.5	—	—	—	—	—	—	—
85W	42,500	85.01	60	120	1.4	333	7	6	8.9	—	—	—	—	—	—	—
96W	48,000	95.98	60	155	1.6	431	9	6	10.2	—	—	—	—	—	—	—
110W	55,000	110.20	60	155	1.4	431	9	6	8.9	—	—	—	—	—	—	—
208V, LFA, Sheathed Elements, Standard Controls without Disconnect																
03W	1,500	2.32	5	17	7.3	47	1	3	35.7	18	35	15	97	3	3	73.4
06W	3,000	4.55	10	51	11.2	142	3	3	53.5	52	60	13	167	4	3	62.9
07T	3,500	6.47	10	51	7.9	142	3	3	45.8	52	70	11	195	5	6	62.9
08W	4,000	6.65	20	51	7.7	142	3	3	40.1	52	80	12	222	5	6	62.9
09T	4,500	6.99	20	51	7.3	142	3	3	35.7	52	90	13	250	6	6	62.9
10W	5,000	9.15	20	51	5.6	142	3	3	32.1	52	100	11	278	6	6	62.9
11T	5,500	9.52	20	51	5.4	142	3	3	29.2	52	100	11	278	6	6	57.2
12T	6,000	10.64	20	51	4.8	142	3	3	26.7	52	100	9	278	6	6	52.4
12W	6,000	11.46	20	60	5.2	167	4	3	31.5	61	100	9	278	6	6	52.4
14W	7,000	12.67	30	60	4.7	167	4	3	27.0	61	100	8	278	6	6	44.9
16T	8,000	13.73	30	60	4.4	167	4	3	23.6	61	100	7	278	6	6	39.3
17W	8,500	15.60	30	60	3.8	167	4	3	22.2	61	100	6	278	6	6	37.0
18T	9,000	15.75	30	60	3.8	167	4	3	21.0	61	100	6	278	6	6	35.0
21W	10,500	19.73	40	100	5.1	278	6	6	30.0	—	—	—	—	—	—	—
22T	11,000	20.18	40	100	5.0	278	6	6	28.6	—	—	—	—	—	—	—
25T	12,500	22.39	40	100	4.5	278	6	6	25.2	—	—	—	—	—	—	—
25W	12,500	22.05	40	100	4.5	278	6	6	25.2	—	—	—	—	—	—	—
30T	15,000	27.98	40	100	3.6	278	6	6	21.0	—	—	—	—	—	—	—
30W	15,000	28.02	40	100	3.6	278	6	6	21.0	—	—	—	—	—	—	—
35T	17,500	33.51	60	100	3.0	278	6	6	18.0	—	—	—	—	—	—	—
36W	18,000	36.51	60	100	2.7	278	6	6	17.5	—	—	—	—	—	—	—
37T	18,500	34.91	60	100	2.9	278	6	6	17.0	—	—	—	—	—	—	—
40W	20,000	40.24	60	100	2.5	278	6	6	15.7	—	—	—	—	—	—	—
42T	21,000	39.81	60	100	2.5	278	6	6	15.0	—	—	—	—	—	—	—
50W	25,000	50.61	60	100	2.0	278	6	6	12.6	—	—	—	—	—	—	—
51T	25,500	48.69	60	100	2.1	278	6	6	12.3	—	—	—	—	—	—	—
58T	29,000	55.37	60	100	1.8	278	6	6	10.8	—	—	—	—	—	—	—
61W	30,500	60.77	60	100	1.6	278	6	6	10.3	—	—	—	—	—	—	—
72W	36,000	70.32	60	120	1.7	333	7	6	10.5	—	—	—	—	—	—	—
85W	42,500	83.61	60	120	1.4	333	7	6	8.9	—	—	—	—	—	—	—
96W	48,000	94.40	60	155	1.6	431	9	6	10.2	—	—	—	—	—	—	—
110W	55,000	108.62	60	155	1.4	431	9	6	8.9	—	—	—	—	—	—	—

Table 45 — Electric Heater Data (cont)

39M UNIT SIZE	AIRFLOW	FACE AREA	LOW kW EH							HIGH kW EH						
			MIN kW	MAX kW	kW / SQ FT	MAX AMPS	SUB CIRCUITS AT MAX AMPS	CONTROL CIRCUITS AT MAX kW (SEE NOTE 1)	TEMP RISE AT 100% AIRFLOW	MIN kW	MAX kW	kW / SQ FT	MAX AMPS	SUB CIRCUITS AT MAX AMPS	CONTROL CIRCUITS AT MAX kW (SEE NOTE 1)	TEMP RISE AT 100% AIRFLOW
208V, ERV, Sheathed Elements, Standard Controls without Disconnect																
06W	1,500	2.46	2	15	6.1	42	1	3	31.5	—	—	—	—	—	—	—
07T	1,750	—	—	—	—	—	—	—	—	—	—	—	—	—	—	—
08W	2,000	3.57	5	20	5.6	56	2	3	31.5	—	—	—	—	—	—	—
09T	2,250	—	—	—	—	—	—	—	—	—	—	—	—	—	—	—
10W	2,500	4.91	5	25	5.1	69	2	3	31.5	—	—	—	—	—	—	—
11T	2,750	—	—	—	—	—	—	—	—	—	—	—	—	—	—	—
12T	3,000	—	—	—	—	—	—	—	—	—	—	—	—	—	—	—
12W	3,000	6.23	5	30	4.8	83	2	3	31.5	—	—	—	—	—	—	—
14W	3,500	6.88	5	35	5.1	97	3	3	31.5	—	—	—	—	—	—	—
16T	4,000	—	—	—	—	—	—	—	—	—	—	—	—	—	—	—
17W	4,250	8.21	5	45	5.5	125	3	3	33.3	—	—	—	—	—	—	—
18T	4,500	—	—	—	—	—	—	—	—	—	—	—	—	—	—	—
21W	5,250	10.28	10	50	4.9	139	3	3	30.0	—	—	—	—	—	—	—
22T	5,500	—	—	—	—	—	—	—	—	—	—	—	—	—	—	—
25T	6,250	—	—	—	—	—	—	—	—	—	—	—	—	—	—	—
25W	6,250	11.49	10	60	5.2	167	4	3	30.2	—	—	—	—	—	—	—
30T	7,500	—	—	—	—	—	—	—	—	—	—	—	—	—	—	—
30W	7,500	14.60	10	70	4.8	195	5	6	29.4	—	—	—	—	—	—	—
35T	8,750	—	—	—	—	—	—	—	—	—	—	—	—	—	—	—
36W	9,000	22.72	15	90	4.0	250	6	6	31.5	—	—	—	—	—	—	—
37T	9,250	—	—	—	—	—	—	—	—	—	—	—	—	—	—	—
40W	10,000	24.58	15	100	4.1	278	6	6	31.5	—	—	—	—	—	—	—
42T	10,500	—	—	—	—	—	—	—	—	—	—	—	—	—	—	—
50W	12,500	31.18	15	100	3.2	278	6	6	25.2	—	—	—	—	—	—	—
51T	12,750	—	—	—	—	—	—	—	—	—	—	—	—	—	—	—
58T	14,500	—	—	—	—	—	—	—	—	—	—	—	—	—	—	—
61W	15,250	32.53	15	100	3.1	278	6	6	20.6	—	—	—	—	—	—	—
72W	18,000	—	—	—	—	—	—	—	—	—	—	—	—	—	—	—
85W	21,250	—	—	—	—	—	—	—	—	—	—	—	—	—	—	—
96W	24,000	—	—	—	—	—	—	—	—	—	—	—	—	—	—	—
110W	27,500	—	—	—	—	—	—	—	—	—	—	—	—	—	—	—
208V, LFA, Open Elements, Standard Controls with Full SCR																
03W	1,500	2.66	1	16	6.0	44	1	3	33.6	17	32	12	89	2	3	67.1
06W	3,000	4.90	1	16	3.3	44	1	3	16.8	17	32	7	89	2	3	33.6
07T	3,500	7.13	1	16	2.2	44	1	3	14.4	17	32	4	89	2	3	28.8
08W	4,000	7.03	2	32	4.5	89	2	3	25.2	—	—	—	—	—	—	—
09T	4,500	7.61	2	32	4.2	89	2	3	22.4	—	—	—	—	—	—	—
10W	5,000	9.54	2	32	3.4	89	2	3	20.1	—	—	—	—	—	—	—
11T	5,500	10.26	2	32	3.1	89	2	3	18.3	—	—	—	—	—	—	—
12T	6,000	11.38	2	32	2.8	89	2	3	16.8	—	—	—	—	—	—	—
12W	6,000	11.95	2	32	2.7	89	2	3	16.8	—	—	—	—	—	—	—
14W	7,000	13.15	2	32	2.4	89	2	3	14.4	—	—	—	—	—	—	—
16T	8,000	14.60	2	32	2.2	89	2	3	12.6	—	—	—	—	—	—	—
17W	8,500	16.12	2	32	2.0	89	2	3	11.8	—	—	—	—	—	—	—
18T	9,000	16.67	2	32	1.9	89	2	3	11.2	—	—	—	—	—	—	—
21W	10,500	20.39	2	32	1.6	89	2	3	9.6	—	—	—	—	—	—	—
22T	11,000	21.18	2	32	1.5	89	2	3	9.2	—	—	—	—	—	—	—
25T	12,500	23.45	2	32	1.4	89	2	3	8.1	—	—	—	—	—	—	—
25W	12,500	22.71	2	32	1.4	89	2	3	8.1	—	—	—	—	—	—	—
30T	15,000	29.05	2	32	1.1	89	2	3	6.7	—	—	—	—	—	—	—
30W	15,000	28.68	2	32	1.1	89	2	3	6.7	—	—	—	—	—	—	—
35T	17,500	34.61	3	32	0.9	89	2	3	5.8	—	—	—	—	—	—	—
36W	18,000	37.33	3	32	0.9	89	2	3	5.6	—	—	—	—	—	—	—
37T	18,500	36.24	3	32	0.9	89	2	3	5.4	—	—	—	—	—	—	—
40W	20,000	41.14	4	32	0.8	89	2	3	5.0	—	—	—	—	—	—	—
42T	21,000	41.12	4	32	0.8	89	2	3	4.8	—	—	—	—	—	—	—
50W	25,000	51.65	4	32	0.6	89	2	3	4.0	—	—	—	—	—	—	—
51T	25,500	50.01	4	32	0.6	89	2	3	3.9	—	—	—	—	—	—	—
58T	29,000	56.87	5	32	0.6	89	2	3	3.5	—	—	—	—	—	—	—
61W	30,500	62.01	5	32	0.5	89	2	3	3.3	—	—	—	—	—	—	—
72W	36,000	71.71	5	32	0.4	89	2	3	2.8	—	—	—	—	—	—	—
85W	42,500	85.01	9	32	0.4	89	2	3	2.4	—	—	—	—	—	—	—
96W	48,000	95.98	10	32	0.3	89	2	3	2.1	—	—	—	—	—	—	—
110W	55,000	110.20	10	32	0.3	89	2	3	1.8	—	—	—	—	—	—	—

Table 45 — Electric Heater Data (cont)

39M UNIT SIZE	AIRFLOW	FACE AREA	LOW kW EH							HIGH kW EH						
			MIN kW	MAX kW	kW / SQ FT	MAX AMPS	SUB CIRCUITS AT MAX AMPS	CONTROL CIRCUITS AT MAX kW (SEE NOTE 1)	TEMP RISE AT 100% AIRFLOW	MIN kW	MAX kW	kW / SQ FT	MAX AMPS	SUB CIRCUITS AT MAX AMPS	CONTROL CIRCUITS AT MAX kW (SEE NOTE 1)	TEMP RISE AT 100% AIRFLOW
208V, LFA, Open Elements, Standard Controls with Vernier SCR																
03W	1,500	2.66	—	—	—	—	—	—	—	33	35	13	97	3	3	73.4
06W	3,000	4.90	—	—	—	—	—	—	—	33	48	10	133	3	3	50.3
07T	3,500	7.13	—	—	—	—	—	—	—	33	56	8	156	4	3	50.3
08W	4,000	7.03	—	—	—	—	—	—	—	33	64	9	178	4	6	50.3
09T	4,500	7.61	—	—	—	—	—	—	—	33	64	8	178	4	6	44.7
10W	5,000	9.54	—	—	—	—	—	—	—	33	64	7	178	4	6	40.3
11T	5,500	10.26	33	48	4.7	133	3	3	27.5	49	97	9	270	6	6	55.5
12T	6,000	11.38	33	48	4.2	133	3	3	25.2	49	97	9	270	6	6	50.9
12W	6,000	11.95	33	48	4.0	133	3	3	25.2	49	97	8	270	6	6	50.9
14W	7,000	13.15	33	48	3.6	133	3	3	21.6	49	97	7	270	6	6	43.6
16T	8,000	14.60	33	48	3.3	133	3	3	18.9	49	97	7	270	6	6	38.1
17W	8,500	16.12	33	48	3.0	133	3	3	17.8	49	97	6	270	6	6	35.9
18T	9,000	16.67	33	48	2.9	133	3	3	16.8	49	97	6	270	6	6	33.9
21W	10,500	20.39	33	64	3.1	178	4	6	19.2	65	100	5	278	6	6	30.0
22T	11,000	21.18	33	64	3.0	178	4	6	18.3	65	100	5	278	6	6	28.6
25T	12,500	23.45	33	64	2.7	178	4	6	16.1	65	100	4	278	6	6	25.2
25W	12,500	22.71	33	64	2.8	178	4	6	16.1	65	100	4	278	6	6	25.2
30T	15,000	29.05	33	64	2.2	178	4	6	13.4	65	100	3	278	6	6	21.0
30W	15,000	28.68	33	64	2.2	178	4	6	13.4	65	100	3	278	6	6	21.0
35T	17,500	34.61	33	64	1.8	178	4	6	11.5	65	100	3	278	6	6	18.0
36W	18,000	37.33	33	81	2.2	225	5	6	14.2	82	100	3	278	6	6	17.5
37T	18,500	36.24	33	64	1.8	178	4	6	10.9	65	100	3	278	6	6	17.0
40W	20,000	41.14	33	97	2.4	270	6	6	15.3	98	100	2	278	6	6	15.7
42T	21,000	41.12	33	64	1.6	178	4	6	9.6	65	100	2	278	6	6	15.0
50W	25,000	51.65	33	100	1.9	278	6	6	12.6	—	—	—	—	—	—	—
51T	25,500	50.01	33	100	2.0	278	6	6	12.3	—	—	—	—	—	—	—
58T	29,000	56.87	33	100	1.8	278	6	6	10.8	—	—	—	—	—	—	—
61W	30,500	62.01	33	100	1.6	278	6	6	10.3	—	—	—	—	—	—	—
72W	36,000	71.71	33	120	1.7	333	7	6	10.5	—	—	—	—	—	—	—
85W	42,500	85.01	33	120	1.4	333	7	6	8.9	—	—	—	—	—	—	—
96W	48,000	95.98	33	120	1.3	333	7	6	7.9	—	—	—	—	—	—	—
110W	55,000	110.20	33	120	1.1	333	7	6	6.9	—	—	—	—	—	—	—
208V, VAV, Open Elements, Standard Controls without Disconnect																
03W	1,500	1.33	2	9	6.8	25	1	3	18.9	—	—	—	—	—	—	—
06W	3,000	2.45	2	16	6.5	44	1	3	16.8	—	—	—	—	—	—	—
07T	3,500	3.56	2	24	6.7	67	2	3	21.6	—	—	—	—	—	—	—
08W	4,000	3.52	2	23	6.5	64	2	3	18.1	—	—	—	—	—	—	—
09T	4,500	3.81	2	25	6.6	69	2	3	17.5	—	—	—	—	—	—	—
10W	5,000	4.77	2	32	6.7	89	2	3	20.1	—	—	—	—	—	—	—
11T	5,500	5.13	2	34	6.6	94	2	3	19.4	—	—	—	—	—	—	—
12T	6,000	5.69	2	38	6.7	106	3	3	19.9	—	—	—	—	—	—	—
12W	6,000	5.97	3	40	6.7	111	3	3	21.0	—	—	—	—	—	—	—
14W	7,000	6.58	3	44	6.7	122	3	3	19.8	—	—	—	—	—	—	—
16T	8,000	7.30	2	49	6.7	136	3	3	19.3	—	—	—	—	—	—	—
17W	8,500	8.06	2	54	6.7	150	4	3	20.0	—	—	—	—	—	—	—
18T	9,000	8.33	2	55	6.6	153	4	3	19.2	—	—	—	—	—	—	—
21W	10,500	10.20	2	68	6.7	189	4	6	20.4	—	—	—	—	—	—	—
22T	11,000	10.59	2	70	6.6	195	5	6	20.0	—	—	—	—	—	—	—
25T	12,500	11.73	2	78	6.7	217	5	6	19.6	—	—	—	—	—	—	—
25W	12,500	11.36	2	76	6.7	211	5	6	19.1	—	—	—	—	—	—	—
30T	15,000	14.52	2	97	6.7	270	6	6	20.3	—	—	—	—	—	—	—
30W	15,000	14.34	2	96	6.7	267	6	6	20.1	—	—	—	—	—	—	—
35T	17,500	17.31	2	100	5.8	278	6	6	18.0	—	—	—	—	—	—	—
36W	18,000	18.67	2	100	5.4	278	6	6	17.5	—	—	—	—	—	—	—
37T	18,500	18.12	3	100	5.5	278	6	6	17.0	—	—	—	—	—	—	—
40W	20,000	20.57	2	100	4.9	278	6	6	15.7	—	—	—	—	—	—	—
42T	21,000	20.56	3	100	4.9	278	6	6	15.0	—	—	—	—	—	—	—
50W	25,000	25.83	2	100	3.9	278	6	6	12.6	—	—	—	—	—	—	—
51T	25,500	25.00	3	100	4.0	278	6	6	12.3	—	—	—	—	—	—	—
58T	29,000	28.43	3	100	3.5	278	6	6	10.8	—	—	—	—	—	—	—
61W	30,500	31.01	4	100	3.2	278	6	6	10.3	—	—	—	—	—	—	—
72W	36,000	35.86	4	120	3.3	333	7	6	10.5	—	—	—	—	—	—	—
85W	42,500	42.50	6	120	2.8	333	7	6	8.9	—	—	—	—	—	—	—
96W	48,000	47.99	6	155	3.2	431	9	6	10.2	—	—	—	—	—	—	—
110W	55,000	55.10	7	155	2.8	431	9	6	8.9	—	—	—	—	—	—	—

Table 45 — Electric Heater Data (cont)

39M UNIT SIZE	AIRFLOW	FACE AREA	LOW kW EH							HIGH kW EH						
			MIN kW	MAX kW	kW / SQ FT	MAX AMPS	SUB CIRCUITS AT MAX AMPS	CONTROL CIRCUITS AT MAX kW (SEE NOTE 1)	TEMP RISE AT 100% AIRFLOW	MIN kW	MAX kW	kW / SQ FT	MAX AMPS	SUB CIRCUITS AT MAX AMPS	CONTROL CIRCUITS AT MAX kW (SEE NOTE 1)	TEMP RISE AT 100% AIRFLOW
208V, VAV, Open Elements, Standard Controls with Full SCR																
03W	1,500	1.33	1	16	12.0	44	1	3	33.6	17	25	19	69	2	3	52.4
06W	3,000	2.45	1	16	6.5	44	1	3	16.8	17	32	13	89	2	3	33.6
07T	3,500	3.56	1	16	4.5	44	1	3	14.4	17	32	9	89	2	3	28.8
08W	4,000	3.52	1	32	9.1	89	2	3	25.2	—	—	—	—	—	—	—
09T	4,500	3.81	1	32	8.4	89	2	3	22.4	—	—	—	—	—	—	—
10W	5,000	4.77	1	32	6.7	89	2	3	20.1	—	—	—	—	—	—	—
11T	5,500	5.13	1	32	6.2	89	2	3	18.3	—	—	—	—	—	—	—
12T	6,000	5.69	1	32	5.6	89	2	3	16.8	—	—	—	—	—	—	—
12W	6,000	5.97	1	32	5.4	89	2	3	16.8	—	—	—	—	—	—	—
14W	7,000	6.58	1	32	4.9	89	2	3	14.4	—	—	—	—	—	—	—
16T	8,000	7.30	1	32	4.4	89	2	3	12.6	—	—	—	—	—	—	—
17W	8,500	8.06	1	32	4.0	89	2	3	11.8	—	—	—	—	—	—	—
18T	9,000	8.33	1	32	3.8	89	2	3	11.2	—	—	—	—	—	—	—
21W	10,500	10.20	1	32	3.1	89	2	3	9.6	—	—	—	—	—	—	—
22T	11,000	10.59	2	32	3.0	89	2	3	9.2	—	—	—	—	—	—	—
25T	12,500	11.73	2	32	2.7	89	2	3	8.1	—	—	—	—	—	—	—
25W	12,500	11.36	1	32	2.8	89	2	3	8.1	—	—	—	—	—	—	—
30T	15,000	14.52	2	32	2.2	89	2	3	6.7	—	—	—	—	—	—	—
30W	15,000	14.34	1	32	2.2	89	2	3	6.7	—	—	—	—	—	—	—
35T	17,500	17.31	2	32	1.8	89	2	3	5.8	—	—	—	—	—	—	—
36W	18,000	18.67	2	32	1.7	89	2	3	5.6	—	—	—	—	—	—	—
37T	18,500	18.12	2	32	1.8	89	2	3	5.4	—	—	—	—	—	—	—
40W	20,000	20.57	2	32	1.6	89	2	3	5.0	—	—	—	—	—	—	—
42T	21,000	20.56	2	32	1.6	89	2	3	4.8	—	—	—	—	—	—	—
50W	25,000	25.83	2	32	1.2	89	2	3	4.0	—	—	—	—	—	—	—
51T	25,500	25.00	2	32	1.3	89	2	3	3.9	—	—	—	—	—	—	—
58T	29,000	28.43	2	32	1.1	89	2	3	3.5	—	—	—	—	—	—	—
61W	30,500	31.01	4	32	1.0	89	2	3	3.3	—	—	—	—	—	—	—
72W	36,000	35.86	4	32	0.9	89	2	3	2.8	—	—	—	—	—	—	—
85W	42,500	42.50	5	32	0.8	89	2	3	2.4	—	—	—	—	—	—	—
96W	48,000	47.99	5	32	0.7	89	2	3	2.1	—	—	—	—	—	—	—
110W	55,000	55.10	7	32	0.6	89	2	3	1.8	—	—	—	—	—	—	—
208V, VAV, Open Elements, Standard Controls with Vernier SCR																
06W	3,000	2.45	33	37	15.1	103	3	3	38.8	—	—	—	—	—	—	—
07T	3,500	3.56	33	56	15.7	156	4	3	50.3	—	—	—	—	—	—	—
08W	4,000	3.52	33	64	18.2	178	4	6	50.3	—	—	—	—	—	—	—
09T	4,500	3.81	33	64	16.8	178	4	6	44.7	—	—	—	—	—	—	—
10W	5,000	4.77	33	64	13.4	178	4	6	40.3	—	—	—	—	—	—	—
11T	5,500	5.13	33	48	9.4	133	3	3	27.5	49	64	12	178	4	6	36.6
12T	6,000	5.69	33	48	8.4	133	3	3	25.2	49	64	11	178	4	6	33.6
12W	6,000	5.97	33	48	8.0	133	3	3	25.2	49	64	11	178	4	6	33.6
14W	7,000	6.58	33	48	7.3	133	3	3	21.6	49	64	10	178	4	6	28.8
16T	8,000	7.30	33	48	6.6	133	3	3	18.9	49	97	13	270	6	6	38.1
17W	8,500	8.06	33	48	6.0	133	3	3	17.8	49	97	12	270	6	6	35.9
18T	9,000	8.33	33	48	5.8	133	3	3	16.8	49	97	12	270	6	6	33.9
21W	10,500	10.20	33	64	6.3	178	4	6	19.2	—	—	—	—	—	—	—
22T	11,000	10.59	33	64	6.0	178	4	6	18.3	65	97	9	270	6	6	27.7
25T	12,500	11.73	33	64	5.5	178	4	6	16.1	65	97	8	270	6	6	24.4
25W	12,500	11.36	33	64	5.6	178	4	6	16.1	—	—	—	—	—	—	—
30T	15,000	14.52	33	64	4.4	178	4	6	13.4	65	97	7	270	6	6	20.3
30W	15,000	14.34	33	64	4.5	178	4	6	13.4	—	—	—	—	—	—	—
35T	17,500	17.31	33	64	3.7	178	4	6	11.5	65	97	6	270	6	6	17.4
36W	18,000	18.67	33	81	4.3	225	5	6	14.2	82	97	5	270	6	6	17.0
37T	18,500	18.12	33	64	3.5	178	4	6	10.9	65	100	6	278	6	6	17.0
40W	20,000	20.57	33	97	4.7	270	6	6	15.3	—	—	—	—	—	—	—
42T	21,000	20.56	33	64	3.1	178	4	6	9.6	65	100	5	278	6	6	15.0
50W	25,000	25.83	33	97	3.8	270	6	6	12.2	—	—	—	—	—	—	—
51T	25,500	25.00	33	100	4.0	278	6	6	12.3	—	—	—	—	—	—	—
58T	29,000	28.43	33	100	3.5	278	6	6	10.8	—	—	—	—	—	—	—
61W	30,500	31.01	33	100	3.2	278	6	6	10.3	—	—	—	—	—	—	—
72W	36,000	35.86	33	120	3.3	333	7	6	10.5	—	—	—	—	—	—	—
85W	42,500	42.50	33	120	2.8	333	7	6	8.9	—	—	—	—	—	—	—
96W	48,000	47.99	33	155	3.2	431	9	6	10.2	—	—	—	—	—	—	—
110W	55,000	55.10	33	155	2.8	431	9	6	8.9	—	—	—	—	—	—	—

Table 45 — Electric Heater Data (cont)

39M UNIT SIZE	AIRFLOW	FACE AREA	LOW kW EH							HIGH kW EH						
			MIN kW	MAX kW	kW / SQ FT	MAX AMPS	SUB CIRCUITS AT MAX AMPS	CONTROL CIRCUITS AT MAX kW (SEE NOTE 1)	TEMP RISE AT 100% AIRFLOW	MIN kW	MAX kW	kW / SQ FT	MAX AMPS	SUB CIRCUITS AT MAX AMPS	CONTROL CIRCUITS AT MAX kW (SEE NOTE 1)	TEMP RISE AT 100% AIRFLOW
240V, LFA, Open Elements, Standard Controls without Disconnect																
03W	1,500	2.66	5	19	7.1	46	1	3	39.8	20	35	13	84	2	3	73.4
06W	3,000	4.90	10	59	12.0	142	3	3	61.9	60	60	12	145	4	3	62.9
07T	3,500	7.13	10	59	8.3	142	3	3	53.0	60	70	10	169	4	6	62.9
08W	4,000	7.03	20	59	8.4	142	3	3	46.4	60	80	11	193	5	6	62.9
09T	4,500	7.61	20	59	7.7	142	3	3	41.2	60	90	12	217	5	6	62.9
10W	5,000	9.54	20	59	6.2	142	3	3	37.1	60	100	10	241	6	6	62.9
11T	5,500	10.26	20	59	5.7	142	3	3	33.7	60	100	10	241	6	6	57.2
12T	6,000	11.38	20	59	5.2	142	3	3	30.9	60	100	9	241	6	6	52.4
12W	6,000	11.95	20	60	5.0	145	4	3	31.5	61	100	8	241	6	6	52.4
14W	7,000	13.15	30	60	4.6	145	4	3	27.0	61	100	8	241	6	6	44.9
16T	8,000	14.60	30	60	4.1	145	4	3	23.6	61	100	7	241	6	6	39.3
17W	8,500	16.12	30	60	3.7	145	4	3	22.2	61	100	6	241	6	6	37.0
18T	9,000	16.67	30	60	3.6	145	4	3	21.0	61	100	6	241	6	6	35.0
21W	10,500	20.39	40	100	4.9	241	6	6	30.0	—	—	—	—	—	—	—
22T	11,000	21.18	40	100	4.7	241	6	6	28.6	—	—	—	—	—	—	—
25T	12,500	23.45	40	100	4.3	241	6	6	25.2	—	—	—	—	—	—	—
25W	12,500	22.71	40	100	4.4	241	6	6	25.2	—	—	—	—	—	—	—
30T	15,000	29.05	40	100	3.4	241	6	6	21.0	—	—	—	—	—	—	—
30W	15,000	28.68	40	100	3.5	241	6	6	21.0	—	—	—	—	—	—	—
35T	17,500	34.61	60	100	2.9	241	6	6	18.0	—	—	—	—	—	—	—
36W	18,000	37.33	60	100	2.7	241	6	6	17.5	—	—	—	—	—	—	—
37T	18,500	36.24	60	100	2.8	241	6	6	17.0	—	—	—	—	—	—	—
40W	20,000	41.14	60	100	2.4	241	6	6	15.7	—	—	—	—	—	—	—
42T	21,000	41.12	60	100	2.4	241	6	6	15.0	—	—	—	—	—	—	—
50W	25,000	51.65	60	100	1.9	241	6	6	12.6	—	—	—	—	—	—	—
51T	25,500	50.01	60	100	2.0	241	6	6	12.3	—	—	—	—	—	—	—
58T	29,000	56.87	60	100	1.8	241	6	6	10.8	—	—	—	—	—	—	—
61W	30,500	62.01	60	100	1.6	241	6	6	10.3	—	—	—	—	—	—	—
72W	36,000	71.71	60	135	1.9	325	7	6	11.8	—	—	—	—	—	—	—
85W	42,500	85.01	60	135	1.6	325	7	6	10.0	—	—	—	—	—	—	—
96W	48,000	95.98	60	175	1.8	421	9	6	11.5	—	—	—	—	—	—	—
110W	55,000	110.20	60	175	1.6	421	9	6	10.0	—	—	—	—	—	—	—
240V, LFA, Sheathed Elements, Standard Controls without Disconnect																
03W	1,500	2.32	5	19	8.2	46	1	3	39.8	20	35	15	84	2	3	73.4
06W	3,000	4.55	10	59	13.0	142	3	3	61.9	60	60	13	145	4	3	62.9
07T	3,500	6.47	10	59	9.1	142	3	3	53.0	60	70	11	169	4	6	62.9
08W	4,000	6.65	20	59	8.9	142	3	3	46.4	60	80	12	193	5	6	62.9
09T	4,500	6.99	20	59	8.4	142	3	3	41.2	60	90	13	217	5	6	62.9
10W	5,000	9.15	20	59	6.4	142	3	3	37.1	60	100	11	241	6	6	62.9
11T	5,500	9.52	20	59	6.2	142	3	3	33.7	60	100	11	241	6	6	57.2
12T	6,000	10.64	20	59	5.5	142	3	3	30.9	60	100	9	241	6	6	52.4
12W	6,000	11.46	20	60	5.2	145	4	3	31.5	61	100	9	241	6	6	52.4
14W	7,000	12.67	30	60	4.7	145	4	3	27.0	61	100	8	241	6	6	44.9
16T	8,000	13.73	30	60	4.4	145	4	3	23.6	61	100	7	241	6	6	39.3
17W	8,500	15.60	30	60	3.8	145	4	3	22.2	61	100	6	241	6	6	37.0
18T	9,000	15.75	30	60	3.8	145	4	3	21.0	61	100	6	241	6	6	35.0
21W	10,500	19.73	40	100	5.1	241	6	6	30.0	—	—	—	—	—	—	—
22T	11,000	20.18	40	100	5.0	241	6	6	28.6	—	—	—	—	—	—	—
25T	12,500	22.39	40	100	4.5	241	6	6	25.2	—	—	—	—	—	—	—
25W	12,500	22.05	40	100	4.5	241	6	6	25.2	—	—	—	—	—	—	—
30T	15,000	27.98	40	100	3.6	241	6	6	21.0	—	—	—	—	—	—	—
30W	15,000	28.02	40	100	3.6	241	6	6	21.0	—	—	—	—	—	—	—
35T	17,500	33.51	60	100	3.0	241	6	6	18.0	—	—	—	—	—	—	—
36W	18,000	36.51	60	100	2.7	241	6	6	17.5	—	—	—	—	—	—	—
37T	18,500	34.91	60	100	2.9	241	6	6	17.0	—	—	—	—	—	—	—
40W	20,000	40.24	60	100	2.5	241	6	6	15.7	—	—	—	—	—	—	—
42T	21,000	39.81	60	100	2.5	241	6	6	15.0	—	—	—	—	—	—	—
50W	25,000	50.61	60	100	2.0	241	6	6	12.6	—	—	—	—	—	—	—
51T	25,500	48.69	60	100	2.1	241	6	6	12.3	—	—	—	—	—	—	—
58T	29,000	55.37	60	100	1.8	241	6	6	10.8	—	—	—	—	—	—	—
61W	30,500	60.77	60	100	1.6	241	6	6	10.3	—	—	—	—	—	—	—
72W	36,000	70.32	60	135	1.9	325	7	6	11.8	—	—	—	—	—	—	—
85W	42,500	83.61	60	135	1.6	325	7	6	10.0	—	—	—	—	—	—	—
96W	48,000	94.40	60	175	1.9	421	9	6	11.5	—	—	—	—	—	—	—
110W	55,000	108.62	60	175	1.6	421	9	6	10.0	—	—	—	—	—	—	—

Table 45 — Electric Heater Data (cont)

39M UNIT SIZE	AIRFLOW	FACE AREA	LOW kW EH							HIGH kW EH						
			MIN kW	MAX kW	kW / SQ FT	MAX AMPS	SUB CIRCUITS AT MAX AMPS	CONTROL CIRCUITS AT MAX kW (SEE NOTE 1)	TEMP RISE AT 100% AIRFLOW	MIN kW	MAX kW	kW / SQ FT	MAX AMPS	SUB CIRCUITS AT MAX AMPS	CONTROL CIRCUITS AT MAX kW (SEE NOTE 1)	TEMP RISE AT 100% AIRFLOW
240V, ERV, Sheathed Elements, Standard Controls without Disconnect																
03W	750	1.25	1	8	6.4	19	1	3	33.6	—	—	—	—	—	—	—
06W	1,500	2.46	2	15	6.1	36	1	3	31.5	—	—	—	—	—	—	—
07T	1,750	—	—	—	—	—	—	—	—	—	—	—	—	—	—	—
08W	2,000	3.57	5	20	5.6	48	2	3	31.5	—	—	—	—	—	—	—
09T	2,250	—	—	—	—	—	—	—	—	—	—	—	—	—	—	—
10W	2,500	4.91	5	25	5.1	60	2	3	31.5	—	—	—	—	—	—	—
11T	2,750	—	—	—	—	—	—	—	—	—	—	—	—	—	—	—
12T	3,000	—	—	—	—	—	—	—	—	—	—	—	—	—	—	—
12W	3,000	6.23	5	30	4.8	72	2	3	31.5	—	—	—	—	—	—	—
14W	3,500	6.88	5	35	5.1	84	2	3	31.5	—	—	—	—	—	—	—
16T	4,000	—	—	—	—	—	—	—	—	—	—	—	—	—	—	—
17W	4,250	8.21	5	45	5.5	108	3	3	33.3	—	—	—	—	—	—	—
18T	4,500	—	—	—	—	—	—	—	—	—	—	—	—	—	—	—
21W	5,250	10.28	10	50	4.9	120	3	3	30.0	—	—	—	—	—	—	—
22T	5,500	—	—	—	—	—	—	—	—	—	—	—	—	—	—	—
25T	6,250	—	—	—	—	—	—	—	—	—	—	—	—	—	—	—
25W	6,250	11.49	10	60	5.2	145	4	3	30.2	—	—	—	—	—	—	—
30T	7,500	—	—	—	—	—	—	—	—	—	—	—	—	—	—	—
30W	7,500	14.60	10	70	4.8	169	4	6	29.4	—	—	—	—	—	—	—
35T	8,750	—	—	—	—	—	—	—	—	—	—	—	—	—	—	—
36W	9,000	22.72	15	90	4.0	217	5	6	31.5	—	—	—	—	—	—	—
37T	9,250	—	—	—	—	—	—	—	—	—	—	—	—	—	—	—
40W	10,000	24.58	15	100	4.1	241	6	6	31.5	—	—	—	—	—	—	—
42T	10,500	—	—	—	—	—	—	—	—	—	—	—	—	—	—	—
50W	12,500	31.18	15	100	3.2	241	6	6	25.2	—	—	—	—	—	—	—
51T	12,750	—	—	—	—	—	—	—	—	—	—	—	—	—	—	—
58T	14,500	—	—	—	—	—	—	—	—	—	—	—	—	—	—	—
61W	15,250	32.53	15	100	3.1	241	6	6	20.6	—	—	—	—	—	—	—
72W	18,000	—	—	—	—	—	—	—	—	—	—	—	—	—	—	—
85W	21,250	—	—	—	—	—	—	—	—	—	—	—	—	—	—	—
96W	24,000	—	—	—	—	—	—	—	—	—	—	—	—	—	—	—
110W	27,500	—	—	—	—	—	—	—	—	—	—	—	—	—	—	—
240V, LFA, Open Elements, Standard Controls with Full SCR																
03W	1,500	2.66	1	18	6.8	43	1	3	37.7	19	35	13	84	2	3	73.4
06W	3,000	4.90	1	18	3.7	43	1	3	18.9	19	37	8	89	2	3	38.8
07T	3,500	7.13	1	37	5.2	89	2	3	33.3	—	—	—	—	—	—	—
08W	4,000	7.03	1	37	5.3	89	2	3	29.1	—	—	—	—	—	—	—
09T	4,500	7.61	1	37	4.9	89	2	3	25.9	—	—	—	—	—	—	—
10W	5,000	9.54	2	37	3.9	89	2	3	23.3	—	—	—	—	—	—	—
11T	5,500	10.26	2	37	3.6	89	2	3	21.2	—	—	—	—	—	—	—
12T	6,000	11.38	2	37	3.3	89	2	3	19.4	—	—	—	—	—	—	—
12W	6,000	11.95	2	37	3.1	89	2	3	19.4	—	—	—	—	—	—	—
14W	7,000	13.15	2	37	2.8	89	2	3	16.6	—	—	—	—	—	—	—
16T	8,000	14.60	2	37	2.5	89	2	3	14.5	—	—	—	—	—	—	—
17W	8,500	16.12	2	37	2.3	89	2	3	13.7	—	—	—	—	—	—	—
18T	9,000	16.67	2	37	2.2	89	2	3	12.9	—	—	—	—	—	—	—
21W	10,500	20.39	2	37	1.8	89	2	3	11.1	—	—	—	—	—	—	—
22T	11,000	21.18	2	37	1.7	89	2	3	10.6	—	—	—	—	—	—	—
25T	12,500	23.45	2	37	1.6	89	2	3	9.3	—	—	—	—	—	—	—
25W	12,500	22.71	2	37	1.6	89	2	3	9.3	—	—	—	—	—	—	—
30T	15,000	29.05	2	37	1.3	89	2	3	7.8	—	—	—	—	—	—	—
30W	15,000	28.68	2	37	1.3	89	2	3	7.8	—	—	—	—	—	—	—
35T	17,500	34.61	3	37	1.1	89	2	3	6.7	—	—	—	—	—	—	—
36W	18,000	37.33	3	37	1.0	89	2	3	6.5	—	—	—	—	—	—	—
37T	18,500	36.24	3	37	1.0	89	2	3	6.3	—	—	—	—	—	—	—
40W	20,000	41.14	4	37	0.9	89	2	3	5.8	—	—	—	—	—	—	—
42T	21,000	41.12	4	37	0.9	89	2	3	5.5	—	—	—	—	—	—	—
50W	25,000	51.65	4	37	0.7	89	2	3	4.7	—	—	—	—	—	—	—
51T	25,500	50.01	4	37	0.7	89	2	3	4.6	—	—	—	—	—	—	—
58T	29,000	56.87	5	37	0.7	89	2	3	4.0	—	—	—	—	—	—	—
61W	30,500	62.01	5	37	0.6	89	2	3	3.8	—	—	—	—	—	—	—
72W	36,000	71.71	5	37	0.5	89	2	3	3.2	—	—	—	—	—	—	—
85W	42,500	85.01	9	37	0.4	89	2	3	2.7	—	—	—	—	—	—	—
96W	48,000	95.98	10	37	0.4	89	2	3	2.4	—	—	—	—	—	—	—
110W	55,000	110.20	12	37	0.3	89	2	3	2.1	—	—	—	—	—	—	—

Table 45 — Electric Heater Data (cont)

39M UNIT SIZE	AIRFLOW	FACE AREA	LOW kW EH							HIGH kW EH						
			MIN kW	MAX kW	kW / SQ FT	MAX AMPS	SUB CIRCUITS AT MAX AMPS	CONTROL CIRCUITS AT MAX kW (SEE NOTE 1)	TEMP RISE AT 100% AIRFLOW	MIN kW	MAX kW	kW / SQ FT	MAX AMPS	SUB CIRCUITS AT MAX AMPS	CONTROL CIRCUITS AT MAX kW (SEE NOTE 1)	TEMP RISE AT 100% AIRFLOW
240V, LFA, Open Elements, Standard Controls with Vernier SCR																
03W	1,500	2.66	—	—	—	—	—	—	—	—	—	—	—	—	—	—
06W	3,000	4.90	—	—	—	—	—	—	—	38	56	11	135	3	3	58.7
07T	3,500	7.13	—	—	—	—	—	—	—	38	74	10	178	4	6	66.5
08W	4,000	7.03	—	—	—	—	—	—	—	38	74	11	178	4	6	58.2
09T	4,500	7.61	—	—	—	—	—	—	—	38	74	10	178	4	6	51.7
10W	5,000	9.54	—	—	—	—	—	—	—	38	74	8	178	4	6	46.6
11T	5,500	10.26	38	56	5.5	135	3	3	32.0	57	100	10	241	6	6	57.2
12T	6,000	11.38	38	56	4.9	135	3	3	29.4	57	100	9	241	6	6	52.4
12W	6,000	11.95	38	56	4.7	135	3	3	29.4	57	100	8	241	6	6	52.4
14W	7,000	13.15	38	56	4.3	135	3	3	25.2	57	100	8	241	6	6	44.9
16T	8,000	14.60	38	56	3.8	135	3	3	22.0	57	100	7	241	6	6	39.3
17W	8,500	16.12	38	56	3.5	135	3	3	20.7	57	100	6	241	6	6	37.0
18T	9,000	16.67	38	56	3.4	135	3	3	19.6	57	100	6	241	6	6	35.0
21W	10,500	20.39	38	74	3.6	178	4	6	22.2	75	100	5	241	6	6	30.0
22T	11,000	21.18	38	74	3.5	178	4	6	21.2	75	100	5	241	6	6	28.6
25T	12,500	23.45	38	74	3.2	178	4	6	18.6	75	100	4	241	6	6	25.2
25W	12,500	22.71	38	74	3.3	178	4	6	18.6	75	100	4	241	6	6	25.2
30T	15,000	29.05	38	74	2.5	178	4	6	15.5	75	100	3	241	6	6	21.0
30W	15,000	28.68	38	74	2.6	178	4	6	15.5	75	100	3	241	6	6	21.0
35T	17,500	34.61	38	93	2.7	224	5	6	16.7	94	100	3	241	6	6	18.0
36W	18,000	37.33	38	93	2.5	224	5	6	16.3	94	100	3	241	6	6	17.5
37T	18,500	36.24	38	93	2.6	224	5	6	15.8	94	100	3	241	6	6	17.0
40W	20,000	41.14	38	100	2.4	241	6	6	15.7	—	—	—	—	—	—	—
42T	21,000	41.12	38	100	2.4	241	6	6	15.0	—	—	—	—	—	—	—
50W	25,000	51.65	38	100	1.9	241	6	6	12.6	—	—	—	—	—	—	—
51T	25,500	50.01	38	100	2.0	241	6	6	12.3	—	—	—	—	—	—	—
58T	29,000	56.87	38	100	1.8	241	6	6	10.8	—	—	—	—	—	—	—
61W	30,500	62.01	38	100	1.6	241	6	6	10.3	—	—	—	—	—	—	—
72W	36,000	71.71	38	135	1.9	325	7	6	11.8	—	—	—	—	—	—	—
85W	42,500	85.01	38	135	1.6	325	7	6	10.0	—	—	—	—	—	—	—
96W	48,000	95.98	38	175	1.8	421	9	6	11.5	—	—	—	—	—	—	—
110W	55,000	110.20	38	175	1.6	421	9	6	10.0	—	—	—	—	—	—	—
240V, VAV, Open Elements, Standard Controls without Disconnect																
03W	1,500	1.33	2	9	6.8	22	1	3	18.9	—	—	—	—	—	—	—
06W	3,000	2.45	2	16	6.5	39	1	3	16.8	—	—	—	—	—	—	—
07T	3,500	3.56	2	24	6.7	58	2	3	21.6	—	—	—	—	—	—	—
08W	4,000	3.52	2	23	6.5	55	2	3	18.1	—	—	—	—	—	—	—
09T	4,500	3.81	2	25	6.6	60	2	3	17.5	—	—	—	—	—	—	—
10W	5,000	4.77	2	32	6.7	77	2	3	20.1	—	—	—	—	—	—	—
11T	5,500	5.13	2	34	6.6	82	2	3	19.4	—	—	—	—	—	—	—
12T	6,000	5.69	2	38	6.7	92	2	3	19.9	—	—	—	—	—	—	—
12W	6,000	5.97	3	40	6.7	96	3	3	21.0	—	—	—	—	—	—	—
14W	7,000	6.58	3	44	6.7	106	3	3	19.8	—	—	—	—	—	—	—
16T	8,000	7.30	2	49	6.7	118	3	3	19.3	—	—	—	—	—	—	—
17W	8,500	8.06	2	54	6.7	130	3	3	20.0	—	—	—	—	—	—	—
18T	9,000	8.33	2	55	6.6	132	3	3	19.2	—	—	—	—	—	—	—
21W	10,500	10.20	2	68	6.7	164	4	6	20.4	—	—	—	—	—	—	—
22T	11,000	10.59	2	70	6.6	169	4	6	20.0	—	—	—	—	—	—	—
25T	12,500	11.73	2	78	6.7	188	4	6	19.6	—	—	—	—	—	—	—
25W	12,500	11.36	2	76	6.7	183	4	6	19.1	—	—	—	—	—	—	—
30T	15,000	14.52	2	97	6.7	234	5	6	20.3	—	—	—	—	—	—	—
30W	15,000	14.34	2	96	6.7	231	5	6	20.1	—	—	—	—	—	—	—
35T	17,500	17.31	3	100	5.8	241	6	6	18.0	—	—	—	—	—	—	—
36W	18,000	18.67	2	100	5.4	241	6	6	17.5	—	—	—	—	—	—	—
37T	18,500	18.12	3	100	5.5	241	6	6	17.0	—	—	—	—	—	—	—
40W	20,000	20.57	2	100	4.9	241	6	6	15.7	—	—	—	—	—	—	—
42T	21,000	20.56	3	100	4.9	241	6	6	15.0	—	—	—	—	—	—	—
50W	25,000	25.83	2	100	3.9	241	6	6	12.6	—	—	—	—	—	—	—
51T	25,500	25.00	3	100	4.0	241	6	6	12.3	—	—	—	—	—	—	—
58T	29,000	28.43	3	100	3.5	241	6	6	10.8	—	—	—	—	—	—	—
61W	30,500	31.01	4	100	3.2	241	6	6	10.3	—	—	—	—	—	—	—
72W	36,000	35.86	4	135	3.8	325	7	6	11.8	—	—	—	—	—	—	—
85W	42,500	42.50	6	135	3.2	325	7	6	10.0	—	—	—	—	—	—	—
96W	48,000	47.99	6	175	3.6	421	9	6	11.5	—	—	—	—	—	—	—
110W	55,000	55.10	7	175	3.2	421	9	6	10.0	—	—	—	—	—	—	—

Table 45 — Electric Heater Data (cont)

39M UNIT SIZE	AIRFLOW	FACE AREA	LOW kW EH							HIGH kW EH						
			MIN kW	MAX kW	kW / SQ FT	MAX AMPS	SUB CIRCUITS AT MAX AMPS	CONTROL CIRCUITS AT MAX kW (SEE NOTE 1)	TEMP RISE AT 100% AIRFLOW	MIN kW	MAX kW	kW / SQ FT	MAX AMPS	SUB CIRCUITS AT MAX AMPS	CONTROL CIRCUITS AT MAX kW (SEE NOTE 1)	TEMP RISE AT 100% AIRFLOW
240V, VAV, Open Elements, Standard Controls with Full SCR																
03W	1,500	1.33	1	18	13.5	43	1	3	37.7	19	23	17	55	2	3	48.2
06W	3,000	2.45	1	18	7.3	43	1	3	18.9	19	37	15	89	2	3	38.8
07T	3,500	3.56	1	37	10.4	89	2	3	33.3	—	—	—	—	—	—	—
08W	4,000	3.52	1	37	10.5	89	2	3	29.1	—	—	—	—	—	—	—
09T	4,500	3.81	1	37	9.7	89	2	3	25.9	—	—	—	—	—	—	—
10W	5,000	4.77	1	37	7.8	89	2	3	23.3	—	—	—	—	—	—	—
11T	5,500	5.13	1	37	7.2	89	2	3	21.2	—	—	—	—	—	—	—
12T	6,000	5.69	1	37	6.5	89	2	3	19.4	—	—	—	—	—	—	—
12W	6,000	5.97	1	37	6.2	89	2	3	19.4	—	—	—	—	—	—	—
14W	7,000	6.58	1	37	5.6	89	2	3	16.6	—	—	—	—	—	—	—
16T	8,000	7.30	1	37	5.1	89	2	3	14.5	—	—	—	—	—	—	—
17W	8,500	8.06	1	37	4.6	89	2	3	13.7	—	—	—	—	—	—	—
18T	9,000	8.33	1	37	4.4	89	2	3	12.9	—	—	—	—	—	—	—
21W	10,500	10.20	1	37	3.6	89	2	3	11.1	—	—	—	—	—	—	—
22T	11,000	10.59	2	37	3.5	89	2	3	10.6	—	—	—	—	—	—	—
25T	12,500	11.73	2	37	3.2	89	2	3	9.3	—	—	—	—	—	—	—
25W	12,500	11.36	1	37	3.3	89	2	3	9.3	—	—	—	—	—	—	—
30T	15,000	14.52	2	37	2.5	89	2	3	7.8	—	—	—	—	—	—	—
30W	15,000	14.34	1	37	2.6	89	2	3	7.8	—	—	—	—	—	—	—
35T	17,500	17.31	2	37	2.1	89	2	3	6.7	—	—	—	—	—	—	—
36W	18,000	18.67	2	37	2.0	89	2	3	6.5	—	—	—	—	—	—	—
37T	18,500	18.12	2	37	2.0	89	2	3	6.3	—	—	—	—	—	—	—
40W	20,000	20.57	2	37	1.8	89	2	3	5.8	—	—	—	—	—	—	—
42T	21,000	20.56	2	37	1.8	89	2	3	5.5	—	—	—	—	—	—	—
50W	25,000	25.83	2	37	1.4	89	2	3	4.7	—	—	—	—	—	—	—
51T	25,500	25.00	2	37	1.5	89	2	3	4.6	—	—	—	—	—	—	—
58T	29,000	28.43	3	37	1.3	89	2	3	4.0	—	—	—	—	—	—	—
61W	30,500	31.01	3	37	1.2	89	2	3	3.8	—	—	—	—	—	—	—
72W	36,000	35.86	3	37	1.0	89	2	3	3.2	—	—	—	—	—	—	—
85W	42,500	42.50	5	37	0.9	89	2	3	2.7	—	—	—	—	—	—	—
96W	48,000	47.99	5	37	0.8	89	2	3	2.4	—	—	—	—	—	—	—
110W	55,000	55.10	6	37	0.7	89	2	3	2.1	—	—	—	—	—	—	—
240V, VAV, Open Elements, Standard Controls with Vernier SCR																
07T	3,500	3.56	38	74	20.8	178	4	6	66.5	—	—	—	—	—	—	—
08W	4,000	3.52	38	51	14.5	123	3	3	40.1	—	—	—	—	—	—	—
09T	4,500	3.81	38	74	19.4	178	4	6	51.7	—	—	—	—	—	—	—
10W	5,000	4.77	38	74	15.5	178	4	6	46.6	—	—	—	—	—	—	—
11T	5,500	5.13	38	56	10.9	135	3	3	32.0	57	74	14	178	4	6	42.3
12T	6,000	5.69	38	56	9.8	135	3	3	29.4	57	74	13	178	4	6	38.8
12W	6,000	5.97	38	56	9.4	135	3	3	29.4	57	74	12	178	4	6	38.8
14W	7,000	6.58	38	56	8.5	135	3	3	25.2	57	74	11	178	4	6	33.3
16T	8,000	7.30	38	56	7.7	135	3	3	22.0	57	100	14	241	6	6	39.3
17W	8,500	8.06	38	56	6.9	135	3	3	20.7	57	100	12	241	6	6	37.0
18T	9,000	8.33	38	56	6.7	135	3	3	19.6	57	100	12	241	6	6	35.0
21W	10,500	10.20	38	74	7.3	178	4	6	22.2	—	—	—	—	—	—	—
22T	11,000	10.59	38	74	7.0	178	4	6	21.2	75	100	9	241	6	6	28.6
25T	12,500	11.73	38	74	6.3	178	4	6	18.6	75	100	9	241	6	6	25.2
25W	12,500	11.36	38	74	6.5	178	4	6	18.6	—	—	—	—	—	—	—
30T	15,000	14.52	38	74	5.1	178	4	6	15.5	75	100	7	241	6	6	21.0
30W	15,000	14.34	38	74	5.2	178	4	6	15.5	—	—	—	—	—	—	—
35T	17,500	17.31	38	93	5.4	224	5	6	16.7	94	100	6	241	6	6	18.0
36W	18,000	18.67	38	93	5.0	224	5	6	16.3	94	100	5	241	6	6	17.5
37T	18,500	18.12	38	93	5.1	224	5	6	15.8	94	100	6	241	6	6	17.0
40W	20,000	20.57	38	100	4.9	241	6	6	15.7	—	—	—	—	—	—	—
42T	21,000	20.56	38	100	4.9	241	6	6	15.0	—	—	—	—	—	—	—
50W	25,000	25.83	38	100	3.9	241	6	6	12.6	—	—	—	—	—	—	—
51T	25,500	25.00	38	100	4.0	241	6	6	12.3	—	—	—	—	—	—	—
58T	29,000	28.43	38	100	3.5	241	6	6	10.8	—	—	—	—	—	—	—
61W	30,500	31.01	38	100	3.2	241	6	6	10.3	—	—	—	—	—	—	—
72W	36,000	35.86	38	135	3.8	325	7	6	11.8	—	—	—	—	—	—	—
85W	42,500	42.50	38	135	3.2	325	7	6	10.0	—	—	—	—	—	—	—
96W	48,000	47.99	38	175	3.6	421	9	6	11.5	—	—	—	—	—	—	—
110W	55,000	55.10	38	175	3.2	421	9	6	10.0	—	—	—	—	—	—	—

Table 45 — Electric Heater Data (cont)

39M UNIT SIZE	AIRFLOW	FACE AREA	LOW kW EH							HIGH kW EH						
			MIN kW	MAX kW	kW / SQ FT	MAX AMPS	SUB CIRCUITS AT MAX AMPS	CONTROL CIRCUITS AT MAX kW (SEE NOTE 1)	TEMP RISE AT 100% AIRFLOW	MIN kW	MAX kW	kW / SQ FT	MAX AMPS	SUB CIRCUITS AT MAX AMPS	CONTROL CIRCUITS AT MAX kW (SEE NOTE 1)	TEMP RISE AT 100% AIRFLOW
380V, LFA, Open Elements, Standard Controls without Disconnect																
03W	1,500	2.66	5	31	11.6	47	1	3	65.0	32	35	13	53	2	3	73.4
06W	3,000	4.90	10	31	6.3	47	1	3	32.5	32	60	12	91	2	3	62.9
07T	3,500	7.13	10	50	7.0	76	2	3	44.9	51	70	10	106	3	6	62.9
08W	4,000	7.03	20	60	8.5	91	2	3	47.2	61	80	11	122	3	6	62.9
09T	4,500	7.61	20	60	7.9	91	2	3	41.9	61	90	12	137	3	6	62.9
10W	5,000	9.54	20	60	6.3	91	2	3	37.7	61	94	10	143	3	6	59.1
11T	5,500	10.26	20	70	6.8	106	3	6	40.0	71	110	11	167	4	6	62.9
12T	6,000	11.38	20	80	7.0	122	3	6	41.9	81	120	11	183	4	6	62.9
12W	6,000	11.95	20	92	7.7	140	3	6	48.2	93	130	11	198	5	6	68.2
14W	7,000	13.15	30	92	7.0	140	3	6	41.3	93	150	11	228	5	6	67.4
16T	8,000	14.60	30	93	6.4	141	3	6	36.6	94	160	11	243	6	6	62.9
17W	8,500	16.12	30	94	5.8	143	3	6	34.8	95	175	11	266	6	6	64.8
18T	9,000	16.67	30	93	5.6	141	3	6	32.5	94	175	11	266	6	6	61.2
21W	10,500	20.39	40	94	4.6	143	3	6	28.2	95	220	11	335	7	6	65.9
22T	11,000	21.18	40	94	4.4	143	3	6	26.9	95	230	11	350	8	6	65.8
25T	12,500	23.45	40	94	4.0	143	3	6	23.7	95	250	11	380	8	6	62.9
25W	12,500	22.71	40	94	4.1	143	3	6	23.7	95	250	11	380	8	6	62.9
30T	15,000	29.05	40	94	3.2	143	3	6	19.7	95	250	9	380	8	6	52.4
30W	15,000	28.68	40	94	3.3	143	3	6	19.7	95	252	9	383	8	6	52.8
35T	17,500	34.61	60	94	2.7	143	3	6	16.9	95	252	7	383	8	6	45.3
36W	18,000	37.33	60	94	2.5	143	3	6	16.4	90	252	7	383	8	6	44.0
37T	18,500	36.24	60	94	2.6	143	3	6	16.0	95	252	7	383	8	6	42.8
40W	20,000	41.14	60	189	4.6	287	6	6	29.7	90	252	6	383	8	6	39.6
42T	21,000	41.12	60	189	4.6	287	6	6	28.3	190	252	6	383	8	6	37.7
50W	25,000	51.65	60	200	3.9	304	7	6	25.2	201	252	5	383	8	6	31.7
51T	25,500	50.01	60	200	4.0	304	7	6	24.7	201	252	5	383	8	6	31.1
58T	29,000	56.87	60	252	4.4	383	8	6	27.3	—	—	—	—	—	—	—
61W	30,500	62.01	60	252	4.1	383	8	6	26.0	—	—	—	—	—	—	—
72W	36,000	71.71	60	252	3.5	383	8	6	22.0	—	—	—	—	—	—	—
85W	42,500	85.01	60	252	3.0	383	8	6	18.7	—	—	—	—	—	—	—
96W	48,000	95.98	60	280	2.9	426	9	6	18.3	—	—	—	—	—	—	—
110W	55,000	110.20	60	280	2.5	426	9	6	16.0	—	—	—	—	—	—	—
380V, LFA, Sheathed Elements, Standard Controls without Disconnect																
03W	1,500	2.32	5	31	13.4	47	1	3	65.0	32	35	15	53	2	3	73.4
06W	3,000	4.55	10	31	6.8	47	1	3	32.5	32	60	13	91	2	3	62.9
07T	3,500	6.47	10	50	7.7	76	2	3	44.9	51	70	11	106	3	6	62.9
08W	4,000	6.65	20	60	9.0	91	2	3	47.2	61	80	12	122	3	6	62.9
09T	4,500	6.99	20	60	8.6	91	2	3	41.9	61	90	13	137	3	6	62.9
10W	5,000	9.15	20	60	6.6	91	2	3	37.7	61	94	10	143	3	6	59.1
11T	5,500	9.52	20	70	7.4	106	3	6	40.0	71	110	12	167	4	6	62.9
12T	6,000	10.64	20	80	7.5	122	3	6	41.9	81	120	11	183	4	6	62.9
12W	6,000	11.46	20	92	8.0	140	3	6	48.2	93	130	11	198	5	6	68.2
14W	7,000	12.67	30	92	7.3	140	3	6	41.3	93	150	12	228	5	6	67.4
16T	8,000	13.73	30	93	6.8	141	3	6	36.6	94	160	12	243	6	6	62.9
17W	8,500	15.60	30	94	6.0	143	3	6	34.8	95	175	11	266	6	6	64.8
18T	9,000	15.75	30	93	5.9	141	3	6	32.5	94	175	11	266	6	6	61.2
21W	10,500	19.73	40	94	4.8	143	3	6	28.2	95	220	11	335	7	6	65.9
22T	11,000	20.18	40	94	4.7	143	3	6	26.9	95	230	11	350	8	6	65.8
25T	12,500	22.39	40	94	4.2	143	3	6	23.7	95	250	11	380	8	6	62.9
25W	12,500	22.05	40	94	4.3	143	3	6	23.7	95	250	11	380	8	6	62.9
30T	15,000	27.98	40	94	3.4	143	3	6	19.7	95	250	9	380	8	6	52.4
30W	15,000	28.02	40	94	3.4	143	3	6	19.7	95	252	9	383	8	6	52.8
35T	17,500	33.51	60	94	2.8	143	3	6	16.9	95	252	8	383	8	6	45.3
36W	18,000	36.51	60	94	2.6	143	3	6	16.4	90	252	7	383	8	6	44.0
37T	18,500	34.91	60	94	2.7	143	3	6	16.0	95	252	7	383	8	6	42.8
40W	20,000	40.24	60	189	4.7	287	6	6	29.7	90	252	6	383	8	6	39.6
42T	21,000	39.81	60	189	4.7	287	6	6	28.3	190	252	6	383	8	6	37.7
50W	25,000	50.61	60	200	4.0	304	7	6	25.2	201	252	5	383	8	6	31.7
51T	25,500	48.69	60	200	4.1	304	7	6	24.7	201	252	5	383	8	6	31.1
58T	29,000	55.37	60	252	4.6	383	8	6	27.3	—	—	—	—	—	—	—
61W	30,500	60.77	60	252	4.1	383	8	6	26.0	—	—	—	—	—	—	—
72W	36,000	70.32	60	252	3.6	383	8	6	22.0	—	—	—	—	—	—	—
85W	42,500	83.61	60	252	3.0	383	8	6	18.7	—	—	—	—	—	—	—
96W	48,000	94.40	60	280	3.0	426	9	6	18.3	—	—	—	—	—	—	—
110W	55,000	108.62	60	280	2.6	426	9	6	16.0	—	—	—	—	—	—	—

Table 45 — Electric Heater Data (cont)

39M UNIT SIZE	AIRFLOW	FACE AREA	LOW kW EH							HIGH kW EH						
			MIN kW	MAX kW	kW / SQ FT	MAX AMPS	SUB CIRCUITS AT MAX AMPS	CONTROL CIRCUITS AT MAX kW (SEE NOTE 1)	TEMP RISE AT 100% AIRFLOW	MIN kW	MAX kW	kW / SQ FT	MAX AMPS	SUB CIRCUITS AT MAX AMPS	CONTROL CIRCUITS AT MAX kW (SEE NOTE 1)	TEMP RISE AT 100% AIRFLOW
380V, ERV, Sheathed Elements, Standard Controls without Disconnect																
03W	750	1.25	1	8	6.4	12	1	3	33.6	—	—	—	—	—	—	—
06W	1,500	2.46	2	15	6.1	23	1	3	31.5	—	—	—	—	—	—	—
07T	1,750	—	—	—	—	—	—	—	—	—	—	—	—	—	—	—
08W	2,000	3.57	5	20	5.6	30	1	3	31.5	—	—	—	—	—	—	—
09T	2,250	—	—	—	—	—	—	—	—	—	—	—	—	—	—	—
10W	2,500	4.91	5	25	5.1	38	1	3	31.5	—	—	—	—	—	—	—
11T	2,750	—	—	—	—	—	—	—	—	—	—	—	—	—	—	—
12T	3,000	—	—	—	—	—	—	—	—	—	—	—	—	—	—	—
12W	3,000	6.23	5	30	4.8	46	1	3	31.5	—	—	—	—	—	—	—
14W	3,500	6.88	5	35	5.1	53	2	3	31.5	—	—	—	—	—	—	—
16T	4,000	—	—	—	—	—	—	—	—	—	—	—	—	—	—	—
17W	4,250	8.21	5	45	5.5	68	2	3	33.3	—	—	—	—	—	—	—
18T	4,500	—	—	—	—	—	—	—	—	—	—	—	—	—	—	—
21W	5,250	10.28	10	50	4.9	76	2	3	30.0	—	—	—	—	—	—	—
22T	5,500	—	—	—	—	—	—	—	—	—	—	—	—	—	—	—
25T	6,250	—	—	—	—	—	—	—	—	—	—	—	—	—	—	—
25W	6,250	11.49	10	60	5.2	91	2	3	30.2	—	—	—	—	—	—	—
30T	7,500	—	—	—	—	—	—	—	—	—	—	—	—	—	—	—
30W	7,500	14.60	10	70	4.8	106	3	6	29.4	—	—	—	—	—	—	—
35T	8,750	—	—	—	—	—	—	—	—	—	—	—	—	—	—	—
36W	9,000	22.72	15	90	4.0	137	3	6	31.5	—	—	—	—	—	—	—
37T	9,250	—	—	—	—	—	—	—	—	—	—	—	—	—	—	—
40W	10,000	24.58	15	100	4.1	152	4	6	31.5	—	—	—	—	—	—	—
42T	10,500	—	—	—	—	—	—	—	—	—	—	—	—	—	—	—
50W	12,500	31.18	15	125	4.0	190	4	6	31.5	—	—	—	—	—	—	—
51T	12,750	—	—	—	—	—	—	—	—	—	—	—	—	—	—	—
58T	14,500	—	—	—	—	—	—	—	—	—	—	—	—	—	—	—
61W	15,250	32.53	15	150	4.6	228	5	6	30.9	—	—	—	—	—	—	—
72W	18,000	—	—	—	—	—	—	—	—	—	—	—	—	—	—	—
85W	21,250	—	—	—	—	—	—	—	—	—	—	—	—	—	—	—
96W	24,000	—	—	—	—	—	—	—	—	—	—	—	—	—	—	—
110W	27,500	—	—	—	—	—	—	—	—	—	—	—	—	—	—	—
380V, LFA, Open Elements, Standard Controls with Full SCR																
03W	1,500	2.66	1	29	10.9	44	1	3	60.8	30	35	13	53	2	3	73.4
06W	3,000	4.90	1	29	5.9	44	1	3	30.4	30	59	12	90	2	3	61.9
07T	3,500	7.13	2	29	4.1	44	1	3	26.1	30	59	8	90	2	3	53.0
08W	4,000	7.03	1	29	4.1	44	1	3	22.8	30	59	8	90	2	3	46.4
09T	4,500	7.61	2	29	3.8	44	1	3	20.3	30	59	8	90	2	3	41.2
10W	5,000	9.54	2	29	3.0	44	1	3	18.2	30	59	6	90	2	3	37.1
11T	5,500	10.26	2	59	5.7	90	2	3	33.7	—	—	—	—	—	—	—
12T	6,000	11.38	2	59	5.2	90	2	3	30.9	—	—	—	—	—	—	—
12W	6,000	11.95	2	59	4.9	90	2	3	30.9	—	—	—	—	—	—	—
14W	7,000	13.15	2	59	4.5	90	2	3	26.5	—	—	—	—	—	—	—
16T	8,000	14.60	2	59	4.0	90	2	3	23.2	—	—	—	—	—	—	—
17W	8,500	16.12	2	59	3.7	90	2	3	21.8	—	—	—	—	—	—	—
18T	9,000	16.67	2	59	3.5	90	2	3	20.6	—	—	—	—	—	—	—
21W	10,500	20.39	3	59	2.9	90	2	3	17.7	—	—	—	—	—	—	—
22T	11,000	21.18	3	59	2.8	90	2	3	16.9	—	—	—	—	—	—	—
25T	12,500	23.45	3	59	2.5	90	2	3	14.8	—	—	—	—	—	—	—
25W	12,500	22.71	3	59	2.6	90	2	3	14.8	—	—	—	—	—	—	—
30T	15,000	29.05	3	59	2.0	90	2	3	12.4	—	—	—	—	—	—	—
30W	15,000	28.68	3	59	2.1	90	2	3	12.4	—	—	—	—	—	—	—
35T	17,500	34.61	4	59	1.7	90	2	3	10.6	—	—	—	—	—	—	—
36W	18,000	37.33	4	59	1.6	90	2	3	10.3	—	—	—	—	—	—	—
37T	18,500	36.24	4	59	1.6	90	2	3	10.0	—	—	—	—	—	—	—
40W	20,000	41.14	4	59	1.4	90	2	3	9.3	—	—	—	—	—	—	—
42T	21,000	41.12	4	59	1.4	90	2	3	8.8	—	—	—	—	—	—	—
50W	25,000	51.65	5	59	1.1	90	2	3	7.4	—	—	—	—	—	—	—
51T	25,500	50.01	5	59	1.2	90	2	3	7.3	—	—	—	—	—	—	—
58T	29,000	56.87	6	59	1.0	90	2	3	6.4	—	—	—	—	—	—	—
61W	30,500	62.01	6	59	1.0	90	2	3	6.1	—	—	—	—	—	—	—
72W	36,000	71.71	7	59	0.8	90	2	3	5.2	—	—	—	—	—	—	—
85W	42,500	85.01	7	59	0.7	90	2	3	4.4	—	—	—	—	—	—	—
96W	48,000	95.98	10	59	0.6	90	2	3	3.9	—	—	—	—	—	—	—
110W	55,000	110.20	10	59	0.5	90	2	3	3.4	—	—	—	—	—	—	—

Table 45 — Electric Heater Data (cont)

39M UNIT SIZE	AIRFLOW	FACE AREA	LOW kW EH							HIGH kW EH						
			MIN kW	MAX kW	kW / SQ FT	MAX AMPS	SUB CIRCUITS AT MAX AMPS	CONTROL CIRCUITS AT MAX kW (SEE NOTE 1)	TEMP RISE AT 100% AIRFLOW	MIN kW	MAX kW	kW / SQ FT	MAX AMPS	SUB CIRCUITS AT MAX AMPS	CONTROL CIRCUITS AT MAX kW (SEE NOTE 1)	TEMP RISE AT 100% AIRFLOW
380V, LFA, Open Elements, Standard Controls with Vernier SCR																
03W	1,500	2.66	—	—	—	—	—	—	—	—	—	—	—	—	—	—
06W	3,000	4.90	—	—	—	—	—	—	—	—	—	—	—	—	—	—
07T	3,500	7.13	—	—	—	—	—	—	—	60	80	11	122	3	6	71.9
08W	4,000	7.03	—	—	—	—	—	—	—	60	80	11	122	3	6	62.9
09T	4,500	7.61	—	—	—	—	—	—	—	60	94	12	143	3	6	65.7
10W	5,000	9.54	—	—	—	—	—	—	—	60	94	10	143	3	6	59.1
11T	5,500	10.26	—	—	—	—	—	—	—	60	130	13	198	5	6	74.4
12T	6,000	11.38	—	—	—	—	—	—	—	60	130	11	198	5	6	68.2
12W	6,000	11.95	—	—	—	—	—	—	—	60	130	11	198	5	6	68.2
14W	7,000	13.15	—	—	—	—	—	—	—	60	148	11	225	5	6	66.5
16T	8,000	14.60	—	—	—	—	—	—	—	60	148	10	225	5	6	58.2
17W	8,500	16.12	—	—	—	—	—	—	—	60	148	9	225	5	6	54.8
18T	9,000	16.67	—	—	—	—	—	—	—	60	148	9	225	5	6	51.7
21W	10,500	20.39	60	88	4.3	134	3	6	26.4	89	177	9	269	6	6	53.0
22T	11,000	21.18	60	88	4.2	134	3	6	25.2	89	177	8	269	6	6	50.6
25T	12,500	23.45	60	88	3.8	134	3	6	22.1	89	177	8	269	6	6	44.5
25W	12,500	22.71	60	88	3.9	134	3	6	22.1	89	177	8	269	6	6	44.5
30T	15,000	29.05	60	88	3.0	134	3	6	18.5	89	177	6	269	6	6	37.1
30W	15,000	28.68	60	88	3.1	134	3	6	18.5	89	177	6	269	6	6	37.1
35T	17,500	34.61	60	118	3.4	179	4	6	21.2	119	236	7	359	8	6	42.4
36W	18,000	37.33	60	118	3.2	179	4	6	20.6	119	236	6	359	8	6	41.2
37T	18,500	36.24	60	118	3.3	179	4	6	20.1	119	236	7	359	8	6	40.1
40W	20,000	41.14	60	118	2.9	179	4	6	18.6	119	252	6	383	8	6	39.6
42T	21,000	41.12	60	118	2.9	179	4	6	17.7	119	252	6	383	8	6	37.7
50W	25,000	51.65	60	148	2.9	225	5	6	18.6	149	252	5	383	8	6	31.7
51T	25,500	50.01	60	177	3.5	269	6	6	21.8	178	252	5	383	8	6	31.1
58T	29,000	56.87	60	177	3.1	269	6	6	19.2	178	252	4	383	8	6	27.3
61W	30,500	62.01	60	177	2.9	269	6	6	18.3	178	252	4	383	8	6	26.0
72W	36,000	71.71	60	207	2.9	315	7	6	18.1	208	252	4	383	8	6	22.0
85W	42,500	85.01	60	207	2.4	315	7	6	15.3	208	252	3	383	8	6	18.7
96W	48,000	95.98	60	236	2.5	359	8	6	15.5	237	252	3	383	8	6	16.5
110W	55,000	110.20	60	236	2.1	359	8	6	13.5	237	252	2	383	8	6	14.4
380V, VAV, Open Elements, Standard Controls without Disconnect																
03W	1,500	1.33	3	9	6.8	14	1	3	18.9	—	—	—	—	—	—	—
06W	3,000	2.45	3	16	6.5	24	1	3	16.8	—	—	—	—	—	—	—
07T	3,500	3.56	3	24	6.7	37	1	3	21.6	—	—	—	—	—	—	—
08W	4,000	3.52	3	23	6.5	35	1	3	18.1	—	—	—	—	—	—	—
09T	4,500	3.81	3	25	6.6	38	1	3	17.5	—	—	—	—	—	—	—
10W	5,000	4.77	3	32	6.7	49	2	3	20.1	—	—	—	—	—	—	—
11T	5,500	5.13	3	34	6.6	52	2	3	19.4	—	—	—	—	—	—	—
12T	6,000	5.69	3	38	6.7	58	2	3	19.9	—	—	—	—	—	—	—
12W	6,000	5.97	5	40	6.7	61	2	3	21.0	—	—	—	—	—	—	—
14W	7,000	6.58	5	44	6.7	67	2	3	19.8	—	—	—	—	—	—	—
16T	8,000	7.30	3	49	6.7	75	2	3	19.3	—	—	—	—	—	—	—
17W	8,500	8.06	3	54	6.7	82	2	3	20.0	—	—	—	—	—	—	—
18T	9,000	8.33	3	55	6.6	84	2	3	19.2	—	—	—	—	—	—	—
21W	10,500	10.20	3	68	6.7	103	3	6	20.4	—	—	—	—	—	—	—
22T	11,000	10.59	3	70	6.6	106	3	6	20.0	—	—	—	—	—	—	—
25T	12,500	11.73	3	78	6.7	119	3	6	19.6	—	—	—	—	—	—	—
25W	12,500	11.36	3	76	6.7	116	3	6	19.1	—	—	—	—	—	—	—
30T	15,000	14.52	3	94	6.5	143	3	6	19.7	95	97	7	148	4	6	20.3
30W	15,000	14.34	3	94	6.6	143	3	6	19.7	95	96	7	146	4	6	20.1
35T	17,500	17.31	3	94	5.4	143	3	6	16.9	95	115	7	175	4	6	20.7
36W	18,000	18.67	3	94	5.0	143	3	6	16.4	95	124	7	189	4	6	21.7
37T	18,500	18.12	5	94	5.2	143	3	6	16.0	95	120	7	183	4	6	20.4
40W	20,000	20.57	3	137	6.7	208	5	6	21.5	—	—	—	—	—	—	—
42T	21,000	20.56	5	137	6.7	208	5	6	20.5	—	—	—	—	—	—	—
50W	25,000	25.83	3	172	6.7	262	6	6	21.6	—	—	—	—	—	—	—
51T	25,500	25.00	5	166	6.6	253	6	6	20.5	—	—	—	—	—	—	—
58T	29,000	28.43	5	189	6.6	287	6	6	20.5	—	—	—	—	—	—	—
61W	30,500	31.01	5	206	6.6	313	7	6	21.2	—	—	—	—	—	—	—
72W	36,000	35.86	5	238	6.6	362	8	6	20.8	—	—	—	—	—	—	—
85W	42,500	42.50	5	252	5.9	383	8	6	18.7	—	—	—	—	—	—	—
96W	48,000	47.99	5	280	5.8	426	9	6	18.3	—	—	—	—	—	—	—
110W	55,000	55.10	5	280	5.1	426	9	6	16.0	—	—	—	—	—	—	—

Table 45 — Electric Heater Data (cont)

39M UNIT SIZE	AIRFLOW	FACE AREA	LOW kW EH							HIGH kW EH						
			MIN kW	MAX kW	kW / SQ FT	MAX AMPS	SUB CIRCUITS AT MAX AMPS	CONTROL CIRCUITS AT MAX kW (SEE NOTE 1)	TEMP RISE AT 100% AIRFLOW	MIN kW	MAX kW	kW / SQ FT	MAX AMPS	SUB CIRCUITS AT MAX AMPS	CONTROL CIRCUITS AT MAX kW (SEE NOTE 1)	TEMP RISE AT 100% AIRFLOW
380V, VAV, Open Elements, Standard Controls with Full SCR																
03W	1,500	1.33	1	21	15.8	32	1	3	44.0	—	—	—	—	—	—	—
06W	3,000	2.45	1	29	11.8	44	1	3	30.4	30	54	22	82	2	3	56.6
07T	3,500	3.56	1	29	8.1	44	1	3	26.1	30	59	17	90	2	3	53.0
08W	4,000	3.52	1	29	8.2	44	1	3	22.8	30	59	17	90	2	3	46.4
09T	4,500	3.81	1	29	7.6	44	1	3	20.3	30	59	15	90	2	3	41.2
10W	5,000	4.77	1	29	6.1	44	1	3	18.2	30	59	12	90	2	3	37.1
11T	5,500	5.13	1	59	11.5	90	2	3	33.7	—	—	—	—	—	—	—
12T	6,000	5.69	1	59	10.4	90	2	3	30.9	—	—	—	—	—	—	—
12W	6,000	5.97	2	59	9.9	90	2	3	30.9	—	—	—	—	—	—	—
14W	7,000	6.58	2	59	9.0	90	2	3	26.5	—	—	—	—	—	—	—
16T	8,000	7.30	1	59	8.1	90	2	3	23.2	—	—	—	—	—	—	—
17W	8,500	8.06	2	59	7.3	90	2	3	21.8	—	—	—	—	—	—	—
18T	9,000	8.33	1	59	7.1	90	2	3	20.6	—	—	—	—	—	—	—
21W	10,500	10.20	2	59	5.8	90	2	3	17.7	—	—	—	—	—	—	—
22T	11,000	10.59	2	59	5.6	90	2	3	16.9	—	—	—	—	—	—	—
25T	12,500	11.73	2	59	5.0	90	2	3	14.8	—	—	—	—	—	—	—
25W	12,500	11.36	2	59	5.2	90	2	3	14.8	—	—	—	—	—	—	—
30T	15,000	14.52	3	59	4.1	90	2	3	12.4	—	—	—	—	—	—	—
30W	15,000	14.34	2	59	4.1	90	2	3	12.4	—	—	—	—	—	—	—
35T	17,500	17.31	3	59	3.4	90	2	3	10.6	—	—	—	—	—	—	—
36W	18,000	18.67	2	59	3.2	90	2	3	10.3	—	—	—	—	—	—	—
37T	18,500	18.12	3	59	3.3	90	2	3	10.0	—	—	—	—	—	—	—
40W	20,000	20.57	2	59	2.9	90	2	3	9.3	—	—	—	—	—	—	—
42T	21,000	20.56	3	59	2.9	90	2	3	8.8	—	—	—	—	—	—	—
50W	25,000	25.83	3	59	2.3	90	2	3	7.4	—	—	—	—	—	—	—
51T	25,500	25.00	3	59	2.4	90	2	3	7.3	—	—	—	—	—	—	—
58T	29,000	28.43	3	59	2.1	90	2	3	6.4	—	—	—	—	—	—	—
61W	30,500	31.01	3	59	1.9	90	2	3	6.1	—	—	—	—	—	—	—
72W	36,000	35.86	4	59	1.6	90	2	3	5.2	—	—	—	—	—	—	—
85W	42,500	42.50	4	59	1.4	90	2	3	4.4	—	—	—	—	—	—	—
96W	48,000	47.99	4	59	1.2	90	2	3	3.9	—	—	—	—	—	—	—
110W	55,000	55.10	5	59	1.1	90	2	3	3.4	—	—	—	—	—	—	—
380V, VAV, Open Elements, Standard Controls with Vernier SCR																
10W	5,000	4.77	60	68	14.3	103	3	6	42.8	—	—	—	—	—	—	—
11T	5,500	5.13	60	118	23.0	179	4	6	67.5	—	—	—	—	—	—	—
12T	6,000	5.69	60	118	20.7	179	4	6	61.9	—	—	—	—	—	—	—
12W	6,000	5.97	60	118	19.8	179	4	6	61.9	—	—	—	—	—	—	—
14W	7,000	6.58	60	118	17.9	179	4	6	53.0	—	—	—	—	—	—	—
16T	8,000	7.30	60	148	20.3	225	5	6	58.2	—	—	—	—	—	—	—
17W	8,500	8.06	60	148	18.4	225	5	6	54.8	—	—	—	—	—	—	—
18T	9,000	8.33	60	148	17.8	225	5	6	51.7	—	—	—	—	—	—	—
21W	10,500	10.20	60	88	8.6	134	3	6	26.4	89	118	12	179	4	6	35.4
22T	11,000	10.59	60	88	8.3	134	3	6	25.2	89	177	17	269	6	6	50.6
25T	12,500	11.73	60	88	7.5	134	3	6	22.1	89	177	15	269	6	6	44.5
25W	12,500	11.36	60	88	7.7	134	3	6	22.1	89	118	10	179	4	6	29.7
30T	15,000	14.52	60	88	6.1	134	3	6	18.5	89	177	12	269	6	6	37.1
30W	15,000	14.34	60	88	6.1	134	3	6	18.5	89	118	8	179	4	6	24.7
35T	17,500	17.31	60	118	6.8	179	4	6	21.2	119	177	10	269	6	6	31.8
36W	18,000	18.67	60	118	6.3	179	4	6	20.6	119	177	9	269	6	6	30.9
37T	18,500	18.12	60	118	6.5	179	4	6	20.1	119	236	13	359	8	6	40.1
40W	20,000	20.57	60	118	5.7	179	4	6	18.6	119	177	9	269	6	6	27.8
42T	21,000	20.56	60	118	5.7	179	4	6	17.7	119	252	12	383	8	6	37.7
50W	25,000	25.83	60	148	5.7	225	5	6	18.6	149	177	7	269	6	6	22.3
51T	25,500	25.00	60	177	7.1	269	6	6	21.8	178	252	10	383	8	6	31.1
58T	29,000	28.43	60	177	6.2	269	6	6	19.2	178	252	9	383	8	6	27.3
61W	30,500	31.01	60	177	5.7	269	6	6	18.3	178	252	8	383	8	6	26.0
72W	36,000	35.86	60	207	5.8	315	7	6	18.1	208	252	7	383	8	6	22.0
85W	42,500	42.50	60	207	4.9	315	7	6	15.3	208	252	6	383	8	6	18.7
96W	48,000	47.99	60	236	4.9	359	8	6	15.5	237	252	5	383	8	6	16.5
110W	55,000	55.10	60	236	4.3	359	8	6	13.5	237	252	5	383	8	6	14.4

Table 45 — Electric Heater Data (cont)

39M UNIT SIZE	AIRFLOW	FACE AREA	LOW kW EH							HIGH kW EH						
			MIN kW	MAX kW	kW / SQ FT	MAX AMPS	SUB CIRCUITS AT MAX AMPS	CONTROL CIRCUITS AT MAX kW (SEE NOTE 1)	TEMP RISE AT 100% AIRFLOW	MIN kW	MAX kW	kW / SQ FT	MAX AMPS	SUB CIRCUITS AT MAX AMPS	CONTROL CIRCUITS AT MAX kW (SEE NOTE 1)	TEMP RISE AT 100% AIRFLOW
480V, LFA, Open Elements, Standard Controls without Disconnect																
03W	1,500	2.66	5	35	13.1	42	1	3	73.4	—	—	—	—	—	—	—
06W	3,000	4.90	10	39	8.0	47	1	3	40.9	40	60	12	72	2	3	62.9
07T	3,500	7.13	10	39	5.5	47	1	3	35.1	40	70	10	84	2	6	62.9
08W	4,000	7.03	20	79	11.2	95	2	6	62.1	80	80	11	96	3	6	62.9
09T	4,500	7.61	20	79	10.4	95	2	6	55.2	80	90	12	108	3	6	62.9
10W	5,000	9.54	20	79	8.3	95	2	6	49.7	80	100	10	120	3	6	62.9
11T	5,500	10.26	20	79	7.7	95	2	6	45.2	80	110	11	132	3	6	62.9
12T	6,000	11.38	20	79	6.9	95	2	6	41.4	80	120	11	145	4	6	62.9
12W	6,000	11.95	20	119	10.0	143	3	6	62.4	120	130	11	157	4	6	68.2
14W	7,000	13.15	30	119	9.0	143	3	6	53.5	120	150	11	181	4	6	67.4
16T	8,000	14.60	30	119	8.2	143	3	6	46.8	120	160	11	193	5	6	62.9
17W	8,500	16.12	30	119	7.4	143	3	6	44.0	120	175	11	211	5	6	64.8
18T	9,000	16.67	30	119	7.1	143	3	6	41.6	120	175	11	211	5	6	61.2
21W	10,500	20.39	40	119	5.8	143	3	6	35.7	120	220	11	265	6	6	65.9
22T	11,000	21.18	40	119	5.6	143	3	6	34.0	120	230	11	277	6	6	65.8
25T	12,500	23.45	40	119	5.1	143	3	6	29.9	120	250	11	301	7	6	62.9
25W	12,500	22.71	40	119	5.2	143	3	6	29.9	120	250	11	301	7	6	62.9
30T	15,000	29.05	40	119	4.1	143	3	6	25.0	120	275	9	331	7	6	57.7
30W	15,000	28.68	40	119	4.1	143	3	6	25.0	120	275	10	331	7	6	57.7
35T	17,500	34.61	60	239	6.9	288	6	6	43.0	240	350	10	421	9	6	62.9
36W	18,000	37.33	60	239	6.4	288	6	6	41.8	240	350	9	421	9	6	61.2
37T	18,500	36.24	60	239	6.6	288	6	6	40.6	240	360	10	434	10	6	61.2
40W	20,000	41.14	60	239	5.8	288	6	6	37.6	240	400	10	482	11	6	62.9
42T	21,000	41.12	60	239	5.8	288	6	6	35.8	240	400	10	482	11	6	59.9
50W	25,000	51.65	60	252	4.9	303	7	6	31.7	253	404	8	487	11	6	50.8
51T	25,500	50.01	60	252	5.0	303	7	6	31.1	253	404	8	487	11	6	49.8
58T	29,000	56.87	60	319	5.6	384	9	6	34.6	320	404	7	487	11	6	43.8
61W	30,500	62.01	60	319	5.1	384	9	6	32.9	320	404	7	487	11	6	41.7
72W	36,000	71.71	60	359	5.0	432	10	6	31.4	360	404	6	487	11	6	35.3
85W	42,500	85.01	60	359	4.2	432	10	6	26.6	360	404	5	487	11	6	29.9
96W	48,000	95.98	60	404	4.2	487	11	6	26.5	—	—	—	—	—	—	—
110W	55,000	110.20	60	404	3.7	487	11	6	23.1	—	—	—	—	—	—	—
480V, LFA, Sheathed Elements, Standard Controls without Disconnect																
03W	1,500	2.32	5	35	15.1	42	1	3	73.4	—	—	—	—	—	—	—
06W	3,000	4.55	10	39	8.6	47	1	3	40.9	40	60	13	72	2	3	62.9
07T	3,500	6.47	10	39	6.0	47	1	3	35.1	40	70	11	84	2	6	62.9
08W	4,000	6.65	20	79	11.9	95	2	6	62.1	80	80	12	96	3	6	62.9
09T	4,500	6.99	20	79	11.3	95	2	6	55.2	80	90	13	108	3	6	62.9
10W	5,000	9.15	20	79	8.6	95	2	6	49.7	80	100	11	120	3	6	62.9
11T	5,500	9.52	20	79	8.3	95	2	6	45.2	80	110	12	132	3	6	62.9
12T	6,000	10.64	20	79	7.4	95	2	6	41.4	80	120	11	145	4	6	62.9
12W	6,000	11.46	20	119	10.4	143	3	6	62.4	120	130	11	157	4	6	68.2
14W	7,000	12.67	30	119	9.4	143	3	6	53.5	120	150	12	181	4	6	67.4
16T	8,000	13.73	30	119	8.7	143	3	6	46.8	120	160	12	193	5	6	62.9
17W	8,500	15.60	30	119	7.6	143	3	6	44.0	120	175	11	211	5	6	64.8
18T	9,000	15.75	30	119	7.6	143	3	6	41.6	120	175	11	211	5	6	61.2
21W	10,500	19.73	40	119	6.0	143	3	6	35.7	120	220	11	265	6	6	65.9
22T	11,000	20.18	40	119	5.9	143	3	6	34.0	120	230	11	277	6	6	65.8
25T	12,500	22.39	40	119	5.3	143	3	6	29.9	120	250	11	301	7	6	62.9
25W	12,500	22.05	40	119	5.4	143	3	6	29.9	120	250	11	301	7	6	62.9
30T	15,000	27.98	40	119	4.3	143	3	6	25.0	120	275	10	331	7	6	57.7
30W	15,000	28.02	40	119	4.2	143	3	6	25.0	120	275	10	331	7	6	57.7
35T	17,500	33.51	60	239	7.1	288	6	6	43.0	240	350	10	421	9	6	62.9
36W	18,000	36.51	60	239	6.5	288	6	6	41.8	240	350	10	421	9	6	61.2
37T	18,500	34.91	60	239	6.8	288	6	6	40.6	240	360	10	434	10	6	61.2
40W	20,000	40.24	60	239	5.9	288	6	6	37.6	240	400	10	482	11	6	62.9
42T	21,000	39.81	60	239	6.0	288	6	6	35.8	240	400	10	482	11	6	59.9
50W	25,000	50.61	60	252	5.0	303	7	6	31.7	253	404	8	487	11	6	50.8
51T	25,500	48.69	60	252	5.2	303	7	6	31.1	253	404	8	487	11	6	49.8
58T	29,000	55.37	60	319	5.8	384	9	6	34.6	320	404	7	487	11	6	43.8
61W	30,500	60.77	60	319	5.2	384	9	6	32.9	320	404	7	487	11	6	41.7
72W	36,000	70.32	60	395	5.6	476	10	6	34.5	396	475	7	572	12	6	41.5
85W	42,500	83.61	60	395	4.7	476	10	6	29.2	396	475	6	572	12	6	35.2
96W	48,000	94.40	60	476	5.0	573	12	6	31.2	476	595	6	717	15	6	39.0
110W	55,000	108.62	60	476	4.4	573	12	6	27.2	476	595	5	717	15	6	34.0

Table 45 — Electric Heater Data (cont)

39M UNIT SIZE	AIRFLOW	FACE AREA	LOW kW EH							HIGH kW EH						
			MIN kW	MAX kW	kW / SQ FT	MAX AMPS	SUB CIRCUITS AT MAX AMPS	CONTROL CIRCUITS AT MAX kW (SEE NOTE 1)	TEMP RISE AT 100% AIRFLOW	MIN kW	MAX kW	kW / SQ FT	MAX AMPS	SUB CIRCUITS AT MAX AMPS	CONTROL CIRCUITS AT MAX kW (SEE NOTE 1)	TEMP RISE AT 100% AIRFLOW
480V, ERV, Sheathed Elements, Standard Controls without Disconnect																
03W	750	1.25	1	8	6.4	10	1	3	33.6	—	—	—	—	—	—	—
06W	1,500	2.46	2	15	6.1	18	1	3	31.5	—	—	—	—	—	—	—
07T	1,750	—	—	—	—	—	—	—	—	—	—	—	—	—	—	—
08W	2,000	3.57	5	20	5.6	24	1	3	31.5	—	—	—	—	—	—	—
09T	2,250	—	—	—	—	—	—	—	—	—	—	—	—	—	—	—
10W	2,500	4.91	5	25	5.1	30	1	3	31.5	—	—	—	—	—	—	—
11T	2,750	—	—	—	—	—	—	—	—	—	—	—	—	—	—	—
12T	3,000	—	—	—	—	—	—	—	—	—	—	—	—	—	—	—
12W	3,000	6.23	5	30	4.8	36	1	3	31.5	—	—	—	—	—	—	—
14W	3,500	6.88	5	35	5.1	42	1	3	31.5	—	—	—	—	—	—	—
16T	4,000	—	—	—	—	—	—	—	—	—	—	—	—	—	—	—
17W	4,250	8.21	5	45	5.5	54	2	3	33.3	—	—	—	—	—	—	—
18T	4,500	—	—	—	—	—	—	—	—	—	—	—	—	—	—	—
21W	5,250	10.28	10	50	4.9	60	2	3	30.0	—	—	—	—	—	—	—
22T	5,500	—	—	—	—	—	—	—	—	—	—	—	—	—	—	—
25T	6,250	—	—	—	—	—	—	—	—	—	—	—	—	—	—	—
25W	6,250	11.49	10	60	5.2	72	2	3	30.2	—	—	—	—	—	—	—
30T	7,500	—	—	—	—	—	—	—	—	—	—	—	—	—	—	—
30W	7,500	14.60	10	70	4.8	84	2	6	29.4	—	—	—	—	—	—	—
35T	8,750	—	—	—	—	—	—	—	—	—	—	—	—	—	—	—
36W	9,000	22.72	15	90	4.0	108	3	6	31.5	—	—	—	—	—	—	—
37T	9,250	—	—	—	—	—	—	—	—	—	—	—	—	—	—	—
40W	10,000	24.58	15	100	4.1	120	3	6	31.5	—	—	—	—	—	—	—
42T	10,500	—	—	—	—	—	—	—	—	—	—	—	—	—	—	—
50W	12,500	31.18	15	125	4.0	151	4	6	31.5	—	—	—	—	—	—	—
51T	12,750	—	—	—	—	—	—	—	—	—	—	—	—	—	—	—
58T	14,500	—	—	—	—	—	—	—	—	—	—	—	—	—	—	—
61W	15,250	32.53	15	150	4.6	181	4	6	30.9	—	—	—	—	—	—	—
72W	18,000	—	—	—	—	—	—	—	—	—	—	—	—	—	—	—
85W	21,250	—	—	—	—	—	—	—	—	—	—	—	—	—	—	—
96W	24,000	—	—	—	—	—	—	—	—	—	—	—	—	—	—	—
110W	27,500	—	—	—	—	—	—	—	—	—	—	—	—	—	—	—
480V, LFA, Open Elements, Standard Controls with Full SCR																
03W	1,500	2.66	1	35	13.1	42	1	3	73.4	—	—	—	—	—	—	—
06W	3,000	4.90	1	37	7.6	45	1	3	38.8	38	60	12	72	2	3	62.9
07T	3,500	7.13	2	37	5.2	45	1	3	33.3	38	70	10	84	2	6	62.9
08W	4,000	7.03	1	74	10.5	89	2	6	58.2	—	—	—	—	—	—	—
09T	4,500	7.61	2	74	9.7	89	2	6	51.7	—	—	—	—	—	—	—
10W	5,000	9.54	2	74	7.8	89	2	6	46.6	—	—	—	—	—	—	—
11T	5,500	10.26	2	74	7.2	89	2	6	42.3	—	—	—	—	—	—	—
12T	6,000	11.38	2	74	6.5	89	2	6	38.8	—	—	—	—	—	—	—
12W	6,000	11.95	2	74	6.2	89	2	6	38.8	—	—	—	—	—	—	—
14W	7,000	13.15	2	74	5.6	89	2	6	33.3	—	—	—	—	—	—	—
16T	8,000	14.60	2	74	5.1	89	2	6	29.1	—	—	—	—	—	—	—
17W	8,500	16.12	2	74	4.6	89	2	6	27.4	—	—	—	—	—	—	—
18T	9,000	16.67	2	74	4.4	89	2	6	25.9	—	—	—	—	—	—	—
21W	10,500	20.39	3	74	3.6	89	2	6	22.2	—	—	—	—	—	—	—
22T	11,000	21.18	3	74	3.5	89	2	6	21.2	—	—	—	—	—	—	—
25T	12,500	23.45	4	74	3.2	89	2	6	18.6	—	—	—	—	—	—	—
25W	12,500	22.71	4	74	3.3	89	2	6	18.6	—	—	—	—	—	—	—
30T	15,000	29.05	4	74	2.5	89	2	6	15.5	—	—	—	—	—	—	—
30W	15,000	28.68	4	74	2.6	89	2	6	15.5	—	—	—	—	—	—	—
35T	17,500	34.61	5	74	2.1	89	2	6	13.3	—	—	—	—	—	—	—
36W	18,000	37.33	5	74	2.0	89	2	6	12.9	—	—	—	—	—	—	—
37T	18,500	36.24	5	74	2.0	89	2	6	12.6	—	—	—	—	—	—	—
40W	20,000	41.14	5	74	1.8	89	2	6	11.6	—	—	—	—	—	—	—
42T	21,000	41.12	5	74	1.8	89	2	6	11.1	—	—	—	—	—	—	—
50W	25,000	51.65	7	74	1.4	89	2	6	9.3	—	—	—	—	—	—	—
51T	25,500	50.01	7	74	1.5	89	2	6	9.1	—	—	—	—	—	—	—
58T	29,000	56.87	7	74	1.3	89	2	6	8.0	—	—	—	—	—	—	—
61W	30,500	62.01	7	74	1.2	89	2	6	7.6	—	—	—	—	—	—	—
72W	36,000	71.71	7	74	1.0	89	2	6	6.5	—	—	—	—	—	—	—
85W	42,500	85.01	8	74	0.9	89	2	6	5.5	—	—	—	—	—	—	—
96W	48,000	95.98	10	74	0.8	89	2	6	4.8	—	—	—	—	—	—	—
110W	55,000	110.20	10	74	0.7	89	2	6	4.2	—	—	—	—	—	—	—

Table 45 — Electric Heater Data (cont)

39M UNIT SIZE	AIRFLOW	FACE AREA	LOW kW EH							HIGH kW EH						
			MIN kW	MAX kW	kW / SQ FT	MAX AMPS	SUB CIRCUITS AT MAX AMPS	CONTROL CIRCUITS AT MAX kW (SEE NOTE 1)	TEMP RISE AT 100% AIRFLOW	MIN kW	MAX kW	kW / SQ FT	MAX AMPS	SUB CIRCUITS AT MAX AMPS	CONTROL CIRCUITS AT MAX kW (SEE NOTE 1)	TEMP RISE AT 100% AIRFLOW
480V, LFA, Open Elements, Standard Controls with Vernier SCR																
03W	1,500	2.66	—	—	—	—	—	—	—	—	—	—	—	—	—	—
06W	3,000	4.90	—	—	—	—	—	—	—	—	—	—	—	—	—	—
07T	3,500	7.13	—	—	—	—	—	—	—	71	80	11	96	3	6	71.9
08W	4,000	7.03	—	—	—	—	—	—	—	75	80	11	96	3	6	62.9
09T	4,500	7.61	—	—	—	—	—	—	—	75	100	13	120	3	6	69.9
10W	5,000	9.54	—	—	—	—	—	—	—	75	100	10	120	3	6	62.9
11T	5,500	10.26	—	—	—	—	—	—	—	75	130	13	157	4	6	74.4
12T	6,000	11.38	—	—	—	—	—	—	—	75	130	11	157	4	6	68.2
12W	6,000	11.95	—	—	—	—	—	—	—	75	130	11	157	4	6	68.2
14W	7,000	13.15	—	—	—	—	—	—	—	75	150	11	181	4	6	67.4
16T	8,000	14.60	—	—	—	—	—	—	—	75	150	10	181	4	6	59.0
17W	8,500	16.12	—	—	—	—	—	—	—	75	175	11	211	5	6	64.8
18T	9,000	16.67	—	—	—	—	—	—	—	75	175	11	211	5	6	61.2
21W	10,500	20.39	75	112	5.5	135	3	6	33.6	113	220	11	265	6	6	65.9
22T	11,000	21.18	75	112	5.3	135	3	6	32.0	113	220	10	265	6	6	62.9
25T	12,500	23.45	75	112	4.8	135	3	6	28.2	113	250	11	301	7	6	62.9
25W	12,500	22.71	75	112	4.9	135	3	6	28.2	113	250	11	301	7	6	62.9
30T	15,000	29.05	75	112	3.9	135	3	6	23.5	113	252	9	303	7	6	52.8
30W	15,000	28.68	75	112	3.9	135	3	6	23.5	113	252	9	303	7	6	52.8
35T	17,500	34.61	75	149	4.3	179	4	6	26.8	150	299	9	360	8	6	53.7
36W	18,000	37.33	75	149	4.0	179	4	6	26.0	150	299	8	360	8	6	52.3
37T	18,500	36.24	75	149	4.1	179	4	6	25.3	150	299	8	360	8	6	50.8
40W	20,000	41.14	75	149	3.6	179	4	6	23.4	150	336	8	405	9	6	52.8
42T	21,000	41.12	75	149	3.6	179	4	6	22.3	150	336	8	405	9	6	50.3
50W	25,000	51.65	75	187	3.6	225	5	6	23.5	188	404	8	487	11	6	50.8
51T	25,500	50.01	75	187	3.7	225	5	6	23.1	188	404	8	487	11	6	49.8
58T	29,000	56.87	75	224	3.9	270	6	6	24.3	225	404	7	487	11	6	43.8
61W	30,500	62.01	75	224	3.6	270	6	6	23.1	225	404	7	487	11	6	41.7
72W	36,000	71.71	75	261	3.6	314	7	6	22.8	262	404	6	487	11	6	35.3
85W	42,500	85.01	75	261	3.1	314	7	6	19.3	262	404	5	487	11	6	29.9
96W	48,000	95.98	75	299	3.1	360	8	6	19.6	300	404	4	487	11	6	26.5
110W	55,000	110.20	75	299	2.7	360	8	6	17.1	300	404	4	487	11	6	23.1
480V, VAV, Open Elements, Standard Controls without Disconnect																
03W	1,500	1.33	5	9	6.8	11	1	3	18.9	—	—	—	—	—	—	—
06W	3,000	2.45	3	16	6.5	19	1	3	16.8	—	—	—	—	—	—	—
07T	3,500	3.56	3	24	6.7	29	1	3	21.6	—	—	—	—	—	—	—
08W	4,000	3.52	3	23	6.5	28	1	3	18.1	—	—	—	—	—	—	—
09T	4,500	3.81	3	25	6.6	30	1	3	17.5	—	—	—	—	—	—	—
10W	5,000	4.77	3	32	6.7	39	1	3	20.1	—	—	—	—	—	—	—
11T	5,500	5.13	3	34	6.6	41	1	3	19.4	—	—	—	—	—	—	—
12T	6,000	5.69	3	38	6.7	46	1	3	19.9	—	—	—	—	—	—	—
12W	6,000	5.97	6	40	6.7	48	2	3	21.0	—	—	—	—	—	—	—
14W	7,000	6.58	6	44	6.7	53	2	3	19.8	—	—	—	—	—	—	—
16T	8,000	7.30	3	49	6.7	59	2	3	19.3	—	—	—	—	—	—	—
17W	8,500	8.06	3	54	6.7	65	2	3	20.0	—	—	—	—	—	—	—
18T	9,000	8.33	3	55	6.6	66	2	3	19.2	—	—	—	—	—	—	—
21W	10,500	10.20	3	68	6.7	82	2	6	20.4	—	—	—	—	—	—	—
22T	11,000	10.59	3	70	6.6	84	2	6	20.0	—	—	—	—	—	—	—
25T	12,500	11.73	3	78	6.7	94	2	6	19.6	—	—	—	—	—	—	—
25W	12,500	11.36	3	76	6.7	92	2	6	19.1	—	—	—	—	—	—	—
30T	15,000	14.52	3	97	6.7	117	3	6	20.3	—	—	—	—	—	—	—
30W	15,000	14.34	3	96	6.7	116	3	6	20.1	—	—	—	—	—	—	—
35T	17,500	17.31	3	115	6.6	138	3	6	20.7	—	—	—	—	—	—	—
36W	18,000	18.67	3	124	6.6	149	4	6	21.7	—	—	—	—	—	—	—
37T	18,500	18.12	6	120	6.6	145	4	6	20.4	—	—	—	—	—	—	—
40W	20,000	20.57	3	137	6.7	165	4	6	21.5	—	—	—	—	—	—	—
42T	21,000	20.56	6	137	6.7	165	4	6	20.5	—	—	—	—	—	—	—
50W	25,000	25.83	3	172	6.7	207	5	6	21.6	—	—	—	—	—	—	—
51T	25,500	25.00	6	166	6.6	200	5	6	20.5	—	—	—	—	—	—	—
58T	29,000	28.43	5	189	6.6	228	5	6	20.5	—	—	—	—	—	—	—
61W	30,500	31.01	6	206	6.6	248	6	6	21.2	—	—	—	—	—	—	—
72W	36,000	35.86	6	238	6.6	287	6	6	20.8	—	—	—	—	—	—	—
85W	42,500	42.50	6	283	6.7	341	8	6	20.9	—	—	—	—	—	—	—
96W	48,000	47.99	6	319	6.6	384	9	6	20.9	—	—	—	—	—	—	—
110W	55,000	55.10	6	366	6.6	441	10	6	20.9	—	—	—	—	—	—	—

Table 45 — Electric Heater Data (cont)

39M UNIT SIZE	AIRFLOW	FACE AREA	LOW kW EH							HIGH kW EH						
			MIN kW	MAX kW	kW / SQ FT	MAX AMPS	SUB CIRCUITS AT MAX AMPS	CONTROL CIRCUITS AT MAX kW (SEE NOTE 1)	TEMP RISE AT 100% AIRFLOW	MIN kW	MAX kW	kW / SQ FT	MAX AMPS	SUB CIRCUITS AT MAX AMPS	CONTROL CIRCUITS AT MAX kW (SEE NOTE 1)	TEMP RISE AT 100% AIRFLOW
480V, VAV, Open Elements, Standard Controls with Full SCR																
03W	1,500	1.33	1	19	14.3	23	1	3	39.8	—	—	—	—	—	—	—
06W	3,000	2.45	1	37	15.1	45	1	3	38.8	38	47	19	57	2	3	49.3
07T	3,500	3.56	1	37	10.4	45	1	3	33.3	38	70	20	84	2	6	62.9
08W	4,000	3.52	1	68	19.3	82	2	6	53.5	—	—	—	—	—	—	—
09T	4,500	3.81	1	74	19.4	89	2	6	51.7	—	—	—	—	—	—	—
10W	5,000	4.77	1	74	15.5	89	2	6	46.6	—	—	—	—	—	—	—
11T	5,500	5.13	1	74	14.4	89	2	6	42.3	—	—	—	—	—	—	—
12T	6,000	5.69	1	74	13.0	89	2	6	38.8	—	—	—	—	—	—	—
12W	6,000	5.97	2	74	12.4	89	2	6	38.8	—	—	—	—	—	—	—
14W	7,000	6.58	2	74	11.3	89	2	6	33.3	—	—	—	—	—	—	—
16T	8,000	7.30	1	74	10.1	89	2	6	29.1	—	—	—	—	—	—	—
17W	8,500	8.06	2	74	9.2	89	2	6	27.4	—	—	—	—	—	—	—
18T	9,000	8.33	1	74	8.9	89	2	6	25.9	—	—	—	—	—	—	—
21W	10,500	10.20	2	74	7.3	89	2	6	22.2	—	—	—	—	—	—	—
22T	11,000	10.59	2	74	7.0	89	2	6	21.2	—	—	—	—	—	—	—
25T	12,500	11.73	2	74	6.3	89	2	6	18.6	—	—	—	—	—	—	—
25W	12,500	11.36	2	74	6.5	89	2	6	18.6	—	—	—	—	—	—	—
30T	15,000	14.52	2	74	5.1	89	2	6	15.5	—	—	—	—	—	—	—
30W	15,000	14.34	2	74	5.2	89	2	6	15.5	—	—	—	—	—	—	—
35T	17,500	17.31	2	74	4.3	89	2	6	13.3	—	—	—	—	—	—	—
36W	18,000	18.67	3	74	4.0	89	2	6	12.9	—	—	—	—	—	—	—
37T	18,500	18.12	3	74	4.1	89	2	6	12.6	—	—	—	—	—	—	—
40W	20,000	20.57	3	74	3.6	89	2	6	11.6	—	—	—	—	—	—	—
42T	21,000	20.56	3	74	3.6	89	2	6	11.1	—	—	—	—	—	—	—
50W	25,000	25.83	3	74	2.9	89	2	6	9.3	—	—	—	—	—	—	—
51T	25,500	25.00	4	74	3.0	89	2	6	9.1	—	—	—	—	—	—	—
58T	29,000	28.43	4	74	2.6	89	2	6	8.0	—	—	—	—	—	—	—
61W	30,500	31.01	4	74	2.4	89	2	6	7.6	—	—	—	—	—	—	—
72W	36,000	35.86	5	74	2.1	89	2	6	6.5	—	—	—	—	—	—	—
85W	42,500	42.50	5	74	1.7	89	2	6	5.5	—	—	—	—	—	—	—
96W	48,000	47.99	5	74	1.5	89	2	6	4.8	—	—	—	—	—	—	—
110W	55,000	55.10	5	74	1.3	89	2	6	4.2	—	—	—	—	—	—	—
480V, VAV, Open Elements, Standard Controls with Vernier SCR																
11T	5,500	5.13	75	130	25.3	157	4	6	74.4	—	—	—	—	—	—	—
12T	6,000	5.69	75	130	22.8	157	4	6	68.2	—	—	—	—	—	—	—
12W	6,000	5.97	75	130	21.8	157	4	6	68.2	—	—	—	—	—	—	—
14W	7,000	6.58	75	149	22.7	179	4	6	67.0	—	—	—	—	—	—	—
16T	8,000	7.30	75	150	20.6	181	4	6	59.0	—	—	—	—	—	—	—
17W	8,500	8.06	75	149	18.5	179	4	6	55.1	—	—	—	—	—	—	—
18T	9,000	8.33	75	170	20.4	205	5	6	59.4	—	—	—	—	—	—	—
21W	10,500	10.20	75	112	11.0	135	3	6	33.6	113	149	15	179	4	6	44.6
22T	11,000	10.59	75	112	10.6	135	3	6	32.0	113	220	21	265	6	6	62.9
25T	12,500	11.73	75	112	9.6	135	3	6	28.2	113	224	19	270	6	6	56.4
25W	12,500	11.36	75	112	9.9	135	3	6	28.2	113	149	13	179	4	6	37.5
30T	15,000	14.52	75	112	7.7	135	3	6	23.5	113	224	15	270	6	6	47.0
30W	15,000	14.34	75	112	7.8	135	3	6	23.5	113	149	10	179	4	6	31.2
35T	17,500	17.31	75	149	8.6	179	4	6	26.8	150	224	13	270	6	6	40.3
36W	18,000	18.67	75	149	8.0	179	4	6	26.0	150	224	12	270	6	6	39.1
37T	18,500	18.12	75	149	8.2	179	4	6	25.3	150	299	17	360	8	6	50.8
40W	20,000	20.57	75	149	7.2	179	4	6	23.4	150	224	11	270	6	6	35.2
42T	21,000	20.56	75	149	7.2	179	4	6	22.3	150	300	15	361	8	6	44.9
50W	25,000	25.83	75	187	7.2	225	5	6	23.5	188	224	9	270	6	6	28.2
51T	25,500	25.00	75	187	7.5	225	5	6	23.1	188	374	15	450	10	6	46.1
58T	29,000	28.43	75	224	7.9	270	6	6	24.3	225	374	13	450	10	6	40.6
61W	30,500	31.01	75	224	7.2	270	6	6	23.1	225	374	12	450	10	6	38.6
72W	36,000	35.86	75	261	7.3	314	7	6	22.8	262	374	10	450	10	6	32.7
85W	42,500	42.50	75	261	6.1	314	7	6	19.3	262	374	9	450	10	6	27.7
96W	48,000	47.99	75	299	6.2	360	8	6	19.6	300	374	8	450	10	6	24.5
110W	55,000	55.10	75	299	5.4	360	8	6	17.1	300	374	7	450	10	6	21.4

Table 45 — Electric Heater Data (cont)

39M UNIT SIZE	AIRFLOW	FACE AREA	LOW kW EH							HIGH kW EH						
			MIN kW	MAX kW	kW / SQ FT	MAX AMPS	SUB CIRCUITS AT MAX AMPS	CONTROL CIRCUITS AT MAX kW (SEE NOTE 1)	TEMP RISE AT 100% AIRFLOW	MIN kW	MAX kW	kW / SQ FT	MAX AMPS	SUB CIRCUITS AT MAX AMPS	CONTROL CIRCUITS AT MAX kW (SEE NOTE 1)	TEMP RISE AT 100% AIRFLOW
600V, LFA, Open Elements, Standard Controls without Disconnect																
03W	1,500	2.66	5	35	13.1	34	1	3	73.4	—	—	—	—	—	—	—
06W	3,000	4.90	10	49	10.0	47	1	3	51.4	50	60	12	58	2	3	62.9
07T	3,500	7.13	10	49	6.9	47	1	3	44.0	50	70	10	67	2	6	62.9
08W	4,000	7.03	20	80	11.4	77	2	6	62.9	—	—	—	—	—	—	—
09T	4,500	7.61	20	90	11.8	87	2	6	62.9	—	—	—	—	—	—	—
10W	5,000	9.54	20	99	10.4	95	2	6	62.3	100	100	10	96	3	6	62.9
11T	5,500	10.26	20	110	10.7	106	3	6	62.9	—	—	—	—	—	—	—
12T	6,000	11.38	20	120	10.5	116	3	6	62.9	—	—	—	—	—	—	—
12W	6,000	11.95	20	130	10.9	125	3	6	68.2	—	—	—	—	—	—	—
14W	7,000	13.15	30	149	11.3	144	3	6	67.0	150	150	11	145	4	6	67.4
16T	8,000	14.60	30	149	10.2	144	3	6	58.6	150	160	11	154	4	6	62.9
17W	8,500	16.12	30	149	9.2	144	3	6	55.1	150	175	11	169	4	6	64.8
18T	9,000	16.67	30	149	8.9	144	3	6	52.1	150	175	11	169	4	6	61.2
21W	10,500	20.39	40	149	7.3	144	3	6	44.6	150	220	11	212	5	6	65.9
22T	11,000	21.18	40	149	7.0	144	3	6	42.6	150	230	11	222	5	6	65.8
25T	12,500	23.45	40	149	6.4	144	3	6	37.5	150	250	11	241	6	6	62.9
25W	12,500	22.71	40	149	6.6	144	3	6	37.5	150	250	11	241	6	6	62.9
30T	15,000	29.05	40	149	5.1	144	3	6	31.2	150	275	9	265	6	6	57.7
30W	15,000	28.68	40	149	5.2	144	3	6	31.2	150	275	10	265	6	6	57.7
35T	17,500	34.61	60	299	8.6	288	7	6	53.7	300	350	10	337	8	6	62.9
36W	18,000	37.33	60	299	8.0	288	7	6	52.3	300	350	9	337	8	6	61.2
37T	18,500	36.24	60	299	8.3	288	7	6	50.8	300	360	10	347	8	6	61.2
40W	20,000	41.14	60	299	7.3	288	7	6	47.0	300	400	10	385	9	6	62.9
42T	21,000	41.12	60	299	7.3	288	7	6	44.8	300	400	10	385	9	6	59.9
50W	25,000	51.65	60	315	6.1	303	7	6	39.6	316	500	10	482	11	6	62.9
51T	25,500	50.01	60	315	6.3	303	7	6	38.9	316	500	10	482	11	6	61.7
58T	29,000	56.87	60	399	7.0	384	9	6	43.3	400	505	9	487	11	6	54.8
61W	30,500	62.01	60	399	6.4	384	9	6	41.2	400	505	8	487	11	6	52.1
72W	36,000	71.71	60	448	6.2	432	9	6	39.1	449	505	7	487	11	6	44.1
85W	42,500	85.01	60	448	5.3	432	9	6	33.2	449	505	6	487	11	6	37.4
96W	48,000	95.98	60	505	5.3	487	11	6	33.1	—	—	—	—	—	—	—
110W	55,000	110.20	60	505	4.6	487	11	6	28.9	—	—	—	—	—	—	—
600V, LFA, Sheathed Elements, Standard Controls without Disconnect																
03W	1,500	2.32	5	35	15.1	34	1	3	73.4	—	—	—	—	—	—	—
06W	3,000	4.55	10	49	10.8	47	1	3	51.4	50	60	13	58	2	3	62.9
07T	3,500	6.47	10	49	7.6	47	1	3	44.0	50	70	11	67	2	6	62.9
08W	4,000	6.65	20	80	12.0	77	2	6	62.9	—	—	—	—	—	—	—
09T	4,500	6.99	20	90	12.9	87	2	6	62.9	—	—	—	—	—	—	—
10W	5,000	9.15	20	99	10.8	95	2	6	62.3	100	100	11	96	3	6	62.9
11T	5,500	9.52	20	110	11.6	106	3	6	62.9	—	—	—	—	—	—	—
12T	6,000	10.64	20	120	11.3	116	3	6	62.9	—	—	—	—	—	—	—
12W	6,000	11.46	20	130	11.3	125	3	6	68.2	—	—	—	—	—	—	—
14W	7,000	12.67	30	149	11.8	144	3	6	67.0	150	150	12	145	4	6	67.4
16T	8,000	13.73	30	149	10.9	144	3	6	58.6	150	160	12	154	4	6	62.9
17W	8,500	15.60	30	149	9.6	144	3	6	55.1	150	175	11	169	4	6	64.8
18T	9,000	15.75	30	149	9.5	144	3	6	52.1	150	175	11	169	4	6	61.2
21W	10,500	19.73	40	149	7.6	144	3	6	44.6	150	220	11	212	5	6	65.9
22T	11,000	20.18	40	149	7.4	144	3	6	42.6	150	230	11	222	5	6	65.8
25T	12,500	22.39	40	149	6.7	144	3	6	37.5	150	250	11	241	6	6	62.9
25W	12,500	22.05	40	149	6.8	144	3	6	37.5	150	250	11	241	6	6	62.9
30T	15,000	27.98	40	149	5.3	144	3	6	31.2	150	275	10	265	6	6	57.7
30W	15,000	28.02	40	149	5.3	144	3	6	31.2	150	275	10	265	6	6	57.7
35T	17,500	33.51	60	299	8.9	288	7	6	53.7	300	350	10	337	8	6	62.9
36W	18,000	36.51	60	299	8.2	288	7	6	52.3	300	350	10	337	8	6	61.2
37T	18,500	34.91	60	299	8.6	288	7	6	50.8	300	360	10	347	8	6	61.2
40W	20,000	40.24	60	299	7.4	288	7	6	47.0	300	400	10	385	9	6	62.9
42T	21,000	39.81	60	299	7.5	288	7	6	44.8	300	400	10	385	9	6	59.9
50W	25,000	50.61	60	315	6.2	303	7	6	39.6	316	500	10	482	11	6	62.9
51T	25,500	48.69	60	315	6.5	303	7	6	38.9	316	500	10	482	11	6	61.7
58T	29,000	55.37	60	399	7.2	384	9	6	43.3	400	505	9	487	11	6	54.8
61W	30,500	60.77	60	399	6.6	384	9	6	41.2	400	505	8	487	11	6	52.1
72W	36,000	70.32	60	490	7.0	472	10	6	42.8	491	588	8	566	12	6	51.4
85W	42,500	83.61	60	490	5.9	472	10	6	36.3	491	588	7	566	12	6	43.5
96W	48,000	94.40	60	588	6.2	566	12	6	38.5	589	735	8	708	15	6	48.2
110W	55,000	108.62	60	588	5.4	566	12	6	33.6	589	735	7	708	15	6	42.0

Table 45 — Electric Heater Data (cont)

39M UNIT SIZE	AIRFLOW	FACE AREA	LOW kW EH							HIGH kW EH						
			MIN kW	MAX kW	kW / SQ FT	MAX AMPS	SUB CIRCUITS AT MAX AMPS	CONTROL CIRCUITS AT MAX kW (SEE NOTE 1)	TEMP RISE AT 100% AIRFLOW	MIN kW	MAX kW	kW / SQ FT	MAX AMPS	SUB CIRCUITS AT MAX AMPS	CONTROL CIRCUITS AT MAX kW (SEE NOTE 1)	TEMP RISE AT 100% AIRFLOW
600V, ERV, Sheathed Elements, Standard Controls without Disconnect																
03W	750	1.25	1	8	6.4	8	1	3	33.6	—	—	—	—	—	—	—
06W	1,500	2.46	2	15	6.1	14	1	3	31.5	—	—	—	—	—	—	—
07T	1,750	—	—	—	—	—	—	—	—	—	—	—	—	—	—	—
08W	2,000	3.57	5	20	5.6	19	1	3	31.5	—	—	—	—	—	—	—
09T	2,250	—	—	—	—	—	—	—	—	—	—	—	—	—	—	—
10W	2,500	4.91	5	25	5.1	24	1	3	31.5	—	—	—	—	—	—	—
11T	2,750	—	—	—	—	—	—	—	—	—	—	—	—	—	—	—
12T	3,000	—	—	—	—	—	—	—	—	—	—	—	—	—	—	—
12W	3,000	6.23	5	30	4.8	29	1	3	31.5	—	—	—	—	—	—	—
14W	3,500	6.88	5	35	5.1	34	1	3	31.5	—	—	—	—	—	—	—
16T	4,000	—	—	—	—	—	—	—	—	—	—	—	—	—	—	—
17W	4,250	8.21	5	45	5.5	43	1	3	33.3	—	—	—	—	—	—	—
18T	4,500	—	—	—	—	—	—	—	—	—	—	—	—	—	—	—
21W	5,250	10.28	10	50	4.9	48	2	3	30.0	—	—	—	—	—	—	—
22T	5,500	—	—	—	—	—	—	—	—	—	—	—	—	—	—	—
25T	6,250	—	—	—	—	—	—	—	—	—	—	—	—	—	—	—
25W	6,250	11.49	10	60	5.2	58	2	3	30.2	—	—	—	—	—	—	—
30T	7,500	—	—	—	—	—	—	—	—	—	—	—	—	—	—	—
30W	7,500	14.60	10	70	4.8	67	2	6	29.4	—	—	—	—	—	—	—
35T	8,750	—	—	—	—	—	—	—	—	—	—	—	—	—	—	—
36W	9,000	22.72	15	90	4.0	87	2	6	31.5	—	—	—	—	—	—	—
37T	9,250	—	—	—	—	—	—	—	—	—	—	—	—	—	—	—
40W	10,000	24.58	15	100	4.1	96	3	6	31.5	—	—	—	—	—	—	—
42T	10,500	—	—	—	—	—	—	—	—	—	—	—	—	—	—	—
50W	12,500	31.18	15	125	4.0	120	3	6	31.5	—	—	—	—	—	—	—
51T	12,750	—	—	—	—	—	—	—	—	—	—	—	—	—	—	—
58T	14,500	—	—	—	—	—	—	—	—	—	—	—	—	—	—	—
61W	15,250	32.53	15	150	4.6	145	4	6	30.9	—	—	—	—	—	—	—
72W	18,000	—	—	—	—	—	—	—	—	—	—	—	—	—	—	—
85W	21,250	—	—	—	—	—	—	—	—	—	—	—	—	—	—	—
96W	24,000	—	—	—	—	—	—	—	—	—	—	—	—	—	—	—
110W	27,500	—	—	—	—	—	—	—	—	—	—	—	—	—	—	—
600V, LFA, Open Elements, Standard Controls with Full SCR																
03W	1,500	2.66	2	35	13.1	34	1	3	73.4	—	—	—	—	—	—	—
06W	3,000	4.90	2	46	9.4	44	1	3	48.2	47	60	12	58	2	3	62.9
07T	3,500	7.13	3	46	6.5	44	1	3	41.3	47	70	10	67	2	6	62.9
08W	4,000	7.03	2	80	11.4	77	2	6	62.9	—	—	—	—	—	—	—
09T	4,500	7.61	3	93	12.2	90	2	6	65.0	—	—	—	—	—	—	—
10W	5,000	9.54	2	93	9.7	90	2	6	58.5	—	—	—	—	—	—	—
11T	5,500	10.26	3	93	9.1	90	2	6	53.2	—	—	—	—	—	—	—
12T	6,000	11.38	3	93	8.2	90	2	6	48.8	—	—	—	—	—	—	—
12W	6,000	11.95	2	93	7.8	90	2	6	48.8	—	—	—	—	—	—	—
14W	7,000	13.15	2	93	7.1	90	2	6	41.8	—	—	—	—	—	—	—
16T	8,000	14.60	2	93	6.4	90	2	6	36.6	—	—	—	—	—	—	—
17W	8,500	16.12	2	93	5.8	90	2	6	34.4	—	—	—	—	—	—	—
18T	9,000	16.67	2	93	5.6	90	2	6	32.5	—	—	—	—	—	—	—
21W	10,500	20.39	3	93	4.6	90	2	6	27.9	—	—	—	—	—	—	—
22T	11,000	21.18	3	93	4.4	90	2	6	26.6	—	—	—	—	—	—	—
25T	12,500	23.45	4	93	4.0	90	2	6	23.4	—	—	—	—	—	—	—
25W	12,500	22.71	4	93	4.1	90	2	6	23.4	—	—	—	—	—	—	—
30T	15,000	29.05	4	93	3.2	90	2	6	19.5	—	—	—	—	—	—	—
30W	15,000	28.68	4	93	3.2	90	2	6	19.5	—	—	—	—	—	—	—
35T	17,500	34.61	5	93	2.7	90	2	6	16.7	—	—	—	—	—	—	—
36W	18,000	37.33	5	93	2.5	90	2	6	16.3	—	—	—	—	—	—	—
37T	18,500	36.24	5	93	2.6	90	2	6	15.8	—	—	—	—	—	—	—
40W	20,000	41.14	5	93	2.3	90	2	6	14.6	—	—	—	—	—	—	—
42T	21,000	41.12	5	93	2.3	90	2	6	13.9	—	—	—	—	—	—	—
50W	25,000	51.65	7	93	1.8	90	2	6	11.7	—	—	—	—	—	—	—
51T	25,500	50.01	7	93	1.9	90	2	6	11.5	—	—	—	—	—	—	—
58T	29,000	56.87	7	93	1.6	90	2	6	10.1	—	—	—	—	—	—	—
61W	30,500	62.01	7	93	1.5	90	2	6	9.6	—	—	—	—	—	—	—
72W	36,000	71.71	7	93	1.3	90	2	6	8.1	—	—	—	—	—	—	—
85W	42,500	85.01	8	93	1.1	90	2	6	6.9	—	—	—	—	—	—	—
96W	48,000	95.98	11	93	1.0	90	2	6	6.1	—	—	—	—	—	—	—
110W	55,000	110.20	12	93	0.8	90	2	6	5.3	—	—	—	—	—	—	—

Table 45 — Electric Heater Data (cont)

39M UNIT SIZE	AIRFLOW	FACE AREA	LOW kW EH							HIGH kW EH						
			MIN kW	MAX kW	kW / SQ FT	MAX AMPS	SUB CIRCUITS AT MAX AMPS	CONTROL CIRCUITS AT MAX kW (SEE NOTE 1)	TEMP RISE AT 100% AIRFLOW	MIN kW	MAX kW	kW / SQ FT	MAX AMPS	SUB CIRCUITS AT MAX AMPS	CONTROL CIRCUITS AT MAX kW (SEE NOTE 1)	TEMP RISE AT 100% AIRFLOW
600V, LFA, Open Elements, Standard Controls with Vernier SCR																
03W	1,500	2.66	—	—	—	—	—	—	—	—	—	—	—	—	—	—
06W	3,000	4.90	—	—	—	—	—	—	—	—	—	—	—	—	—	—
07T	3,500	7.13	—	—	—	—	—	—	—	—	—	—	—	—	—	—
08W	4,000	7.03	—	—	—	—	—	—	—	—	—	—	—	—	—	—
09T	4,500	7.61	—	—	—	—	—	—	—	94	100	13	96	3	6	69.9
10W	5,000	9.54	—	—	—	—	—	—	—	94	100	10	96	3	6	62.9
11T	5,500	10.26	—	—	—	—	—	—	—	94	130	13	125	3	6	74.4
12T	6,000	11.38	—	—	—	—	—	—	—	94	130	11	125	3	6	68.2
12W	6,000	11.95	—	—	—	—	—	—	—	94	130	11	125	3	6	68.2
14W	7,000	13.15	—	—	—	—	—	—	—	94	150	11	145	4	6	67.4
16T	8,000	14.60	—	—	—	—	—	—	—	94	150	10	145	4	6	59.0
17W	8,500	16.12	—	—	—	—	—	—	—	94	175	11	169	4	6	64.8
18T	9,000	16.67	—	—	—	—	—	—	—	94	175	11	169	4	6	61.2
21W	10,500	20.39	94	140	6.9	135	3	6	41.9	141	220	11	212	5	6	65.9
22T	11,000	21.18	94	140	6.6	135	3	6	40.0	141	220	10	212	5	6	62.9
25T	12,500	23.45	94	140	6.0	135	3	6	35.2	141	250	11	241	6	6	62.9
25W	12,500	22.71	94	140	6.2	135	3	6	35.2	141	250	11	241	6	6	62.9
30T	15,000	29.05	94	140	4.8	135	3	6	29.4	141	275	9	265	6	6	57.7
30W	15,000	28.68	94	140	4.9	135	3	6	29.4	141	275	10	265	6	6	57.7
35T	17,500	34.61	94	187	5.4	180	4	6	33.6	188	350	10	337	8	6	62.9
36W	18,000	37.33	94	187	5.0	180	4	6	32.7	188	350	9	337	8	6	61.2
37T	18,500	36.24	94	187	5.2	180	4	6	31.8	188	350	10	337	8	6	59.5
40W	20,000	41.14	94	187	4.5	180	4	6	29.4	188	400	10	385	9	6	62.9
42T	21,000	41.12	94	187	4.5	180	4	6	28.0	188	400	10	385	9	6	59.9
50W	25,000	51.65	94	233	4.5	224	5	6	29.3	234	500	10	482	11	6	62.9
51T	25,500	50.01	94	233	4.7	224	5	6	28.7	234	500	10	482	11	6	61.7
58T	29,000	56.87	94	280	4.9	270	6	6	30.4	281	505	9	487	11	6	54.8
61W	30,500	62.01	94	280	4.5	270	6	6	28.9	281	505	8	487	11	6	52.1
72W	36,000	71.71	94	327	4.6	315	7	6	28.6	328	505	7	487	11	6	44.1
85W	42,500	85.01	94	327	3.8	315	7	6	24.2	328	505	6	487	11	6	37.4
96W	48,000	95.98	94	374	3.9	360	8	6	24.5	375	505	5	487	11	6	33.1
110W	55,000	110.20	94	374	3.4	360	8	6	21.4	375	505	5	487	11	6	28.9
600V, VAV, Open Elements, Standard Controls without Disconnect																
03W	1,500	1.33	5	9	6.8	11	1	3	18.9	—	—	—	—	—	—	—
06W	3,000	2.45	3	16	6.5	19	1	3	16.8	—	—	—	—	—	—	—
07T	3,500	3.56	3	24	6.7	29	1	3	21.6	—	—	—	—	—	—	—
08W	4,000	3.52	3	23	6.5	28	1	3	18.1	—	—	—	—	—	—	—
09T	4,500	3.81	3	25	6.6	30	1	3	17.5	—	—	—	—	—	—	—
10W	5,000	4.77	3	32	6.7	39	1	3	20.1	—	—	—	—	—	—	—
11T	5,500	5.13	3	34	6.6	41	1	3	19.4	—	—	—	—	—	—	—
12T	6,000	5.69	3	38	6.7	46	1	3	19.9	—	—	—	—	—	—	—
12W	6,000	5.97	6	40	6.7	48	2	3	21.0	—	—	—	—	—	—	—
14W	7,000	6.58	6	44	6.7	53	2	3	19.8	—	—	—	—	—	—	—
16T	8,000	7.30	3	49	6.7	59	2	3	19.3	—	—	—	—	—	—	—
17W	8,500	8.06	3	54	6.7	65	2	3	20.0	—	—	—	—	—	—	—
18T	9,000	8.33	3	55	6.6	66	2	3	19.2	—	—	—	—	—	—	—
21W	10,500	10.20	3	68	6.7	82	2	6	20.4	—	—	—	—	—	—	—
22T	11,000	10.59	3	70	6.6	84	2	6	20.0	—	—	—	—	—	—	—
25T	12,500	11.73	3	78	6.7	94	2	6	19.6	—	—	—	—	—	—	—
25W	12,500	11.36	3	76	6.7	92	2	6	19.1	—	—	—	—	—	—	—
30T	15,000	14.52	3	97	6.7	117	3	6	20.3	—	—	—	—	—	—	—
30W	15,000	14.34	3	96	6.7	116	3	6	20.1	—	—	—	—	—	—	—
35T	17,500	17.31	3	115	6.6	138	3	6	20.7	—	—	—	—	—	—	—
36W	18,000	18.67	3	124	6.6	149	4	6	21.7	—	—	—	—	—	—	—
37T	18,500	18.12	6	120	6.6	145	4	6	20.4	—	—	—	—	—	—	—
40W	20,000	20.57	3	137	6.7	165	4	6	21.5	—	—	—	—	—	—	—
42T	21,000	20.56	6	137	6.7	165	4	6	20.5	—	—	—	—	—	—	—
50W	25,000	25.83	3	172	6.7	207	5	6	21.6	—	—	—	—	—	—	—
51T	25,500	25.00	6	166	6.6	200	5	6	20.5	—	—	—	—	—	—	—
58T	29,000	28.43	5	189	6.6	228	5	6	20.5	—	—	—	—	—	—	—
61W	30,500	31.01	6	206	6.6	248	6	6	21.2	—	—	—	—	—	—	—
72W	36,000	35.86	6	238	6.6	287	6	6	20.8	—	—	—	—	—	—	—
85W	42,500	42.50	6	283	6.7	341	8	6	20.9	—	—	—	—	—	—	—
96W	48,000	47.99	6	319	6.6	384	9	6	20.9	—	—	—	—	—	—	—
110W	55,000	55.10	6	366	6.6	441	10	6	20.9	—	—	—	—	—	—	—

Table 45 — Electric Heater Data (cont)

39M UNIT SIZE	AIRFLOW	FACE AREA	LOW kW EH							HIGH kW EH						
			MIN kW	MAX kW	kW / SQ FT	MAX AMPS	SUB CIRCUITS AT MAX AMPS	CONTROL CIRCUITS AT MAX kW (SEE NOTE 1)	TEMP RISE AT 100% AIRFLOW	MIN kW	MAX kW	kW / SQ FT	MAX AMPS	SUB CIRCUITS AT MAX AMPS	CONTROL CIRCUITS AT MAX kW (SEE NOTE 1)	TEMP RISE AT 100% AIRFLOW
600V, VAV, Open Elements, Standard Controls with Full SCR																
03W	1,500	1.33	1	19	14.3	23	1	3	39.8	—	—	—	—	—	—	—
06W	3,000	2.45	1	37	15.1	45	1	3	38.8	38	47	19	57	2	3	49.3
07T	3,500	3.56	1	37	10.4	45	1	3	33.3	38	70	20	84	2	6	62.9
08W	4,000	3.52	1	68	19.3	82	2	6	53.5	—	—	—	—	—	—	—
09T	4,500	3.81	1	74	19.4	89	2	6	51.7	—	—	—	—	—	—	—
10W	5,000	4.77	1	74	15.5	89	2	6	46.6	—	—	—	—	—	—	—
11T	5,500	5.13	1	74	14.4	89	2	6	42.3	—	—	—	—	—	—	—
12T	6,000	5.69	1	74	13.0	89	2	6	38.8	—	—	—	—	—	—	—
12W	6,000	5.97	2	74	12.4	89	2	6	38.8	—	—	—	—	—	—	—
14W	7,000	6.58	2	74	11.3	89	2	6	33.3	—	—	—	—	—	—	—
16T	8,000	7.30	1	74	10.1	89	2	6	29.1	—	—	—	—	—	—	—
17W	8,500	8.06	2	74	9.2	89	2	6	27.4	—	—	—	—	—	—	—
18T	9,000	8.33	1	74	8.9	89	2	6	25.9	—	—	—	—	—	—	—
21W	10,500	10.20	2	74	7.3	89	2	6	22.2	—	—	—	—	—	—	—
22T	11,000	10.59	2	74	7.0	89	2	6	21.2	—	—	—	—	—	—	—
25T	12,500	11.73	2	74	6.3	89	2	6	18.6	—	—	—	—	—	—	—
25W	12,500	11.36	2	74	6.5	89	2	6	18.6	—	—	—	—	—	—	—
30T	15,000	14.52	2	74	5.1	89	2	6	15.5	—	—	—	—	—	—	—
30W	15,000	14.34	2	74	5.2	89	2	6	15.5	—	—	—	—	—	—	—
35T	17,500	17.31	2	74	4.3	89	2	6	13.3	—	—	—	—	—	—	—
36W	18,000	18.67	3	74	4.0	89	2	6	12.9	—	—	—	—	—	—	—
37T	18,500	18.12	3	74	4.1	89	2	6	12.6	—	—	—	—	—	—	—
40W	20,000	20.57	3	74	3.6	89	2	6	11.6	—	—	—	—	—	—	—
42T	21,000	20.56	3	74	3.6	89	2	6	11.1	—	—	—	—	—	—	—
50W	25,000	25.83	3	74	2.9	89	2	6	9.3	—	—	—	—	—	—	—
51T	25,500	25.00	4	74	3.0	89	2	6	9.1	—	—	—	—	—	—	—
58T	29,000	28.43	4	74	2.6	89	2	6	8.0	—	—	—	—	—	—	—
61W	30,500	31.01	4	74	2.4	89	2	6	7.6	—	—	—	—	—	—	—
72W	36,000	35.86	5	74	2.1	89	2	6	6.5	—	—	—	—	—	—	—
85W	42,500	42.50	5	74	1.7	89	2	6	5.5	—	—	—	—	—	—	—
96W	48,000	47.99	5	74	1.5	89	2	6	4.8	—	—	—	—	—	—	—
110W	55,000	55.10	5	74	1.3	89	2	6	4.2	—	—	—	—	—	—	—

Table 45 — Electric Heater Data (cont)

39M UNIT SIZE	AIRFLOW	FACE AREA	LOW kW EH							HIGH kW EH						
			MIN kW	MAX kW	kW / SQ FT	MAX AMPS	SUB CIRCUITS AT MAX AMPS	CONTROL CIRCUITS AT MAX kW (SEE NOTE 1)	TEMP RISE AT 100% AIRFLOW	MIN kW	MAX kW	kW / SQ FT	MAX AMPS	SUB CIRCUITS AT MAX AMPS	CONTROL CIRCUITS AT MAX kW (SEE NOTE 1)	TEMP RISE AT 100% AIRFLOW
600V, VAV, Open Elements, Standard Controls with Vernier SCR																
11T	5,500	5.13	75	130	25.3	157	4	6	74.4	—	—	—	—	—	—	—
12T	6,000	5.69	75	130	22.8	157	4	6	68.2	—	—	—	—	—	—	—
12W	6,000	5.97	75	130	21.8	157	4	6	68.2	—	—	—	—	—	—	—
14W	7,000	6.58	75	149	22.7	179	4	6	67.0	—	—	—	—	—	—	—
16T	8,000	7.30	75	150	20.6	181	4	6	59.0	—	—	—	—	—	—	—
17W	8,500	8.06	75	149	18.5	179	4	6	55.1	—	—	—	—	—	—	—
18T	9,000	8.33	75	170	20.4	205	5	6	59.4	—	—	—	—	—	—	—
21W	10,500	10.20	75	112	11.0	135	3	6	33.6	113	149	15	179	4	6	44.6
22T	11,000	10.59	75	112	10.6	135	3	6	32.0	113	220	21	265	6	6	62.9
25T	12,500	11.73	75	112	9.6	135	3	6	28.2	113	224	19	270	6	6	56.4
25W	12,500	11.36	75	112	9.9	135	3	6	28.2	113	149	13	179	4	6	37.5
30T	15,000	14.52	75	112	7.7	135	3	6	23.5	113	224	15	270	6	6	47.0
30W	15,000	14.34	75	112	7.8	135	3	6	23.5	113	149	10	179	4	6	31.2
35T	17,500	17.31	75	149	8.6	179	4	6	26.8	150	224	13	270	6	6	40.3
36W	18,000	18.67	75	149	8.0	179	4	6	26.0	150	224	12	270	6	6	39.1
37T	18,500	18.12	75	149	8.2	179	4	6	25.3	150	299	17	360	8	6	50.8
40W	20,000	20.57	75	149	7.2	179	4	6	23.4	150	224	11	270	6	6	35.2
42T	21,000	20.56	75	149	7.2	179	4	6	22.3	150	300	15	361	8	6	44.9
50W	25,000	25.83	75	187	7.2	225	5	6	23.5	188	224	9	270	6	6	28.2
51T	25,500	25.00	75	187	7.5	225	5	6	23.1	188	374	15	450	10	6	46.1
58T	29,000	28.43	75	224	7.9	270	6	6	24.3	225	374	13	450	10	6	40.6
61W	30,500	31.01	75	224	7.2	270	6	6	23.1	225	374	12	450	10	6	38.6
72W	36,000	35.86	75	261	7.3	314	7	6	22.8	262	374	10	450	10	6	32.7
85W	42,500	42.50	75	261	6.1	314	7	6	19.3	262	374	9	450	10	6	27.7
96W	48,000	47.99	75	299	6.2	360	8	6	19.6	300	374	8	450	10	6	24.5
110W	55,000	55.10	75	299	5.4	360	8	6	17.1	300	374	7	450	10	6	21.4

LEGEND

AHRI — Air-Conditioning, Heating and Refrigeration Institute
FLA — Full Load Amps
MCA — Minimum Circuit Amps
SCR — Silicon Control Rectifier

NOTE(S):

1. Standard control steps are listed under the Control Step heading. “Free” additional steps of control are optionally available when the number of sub-circuits exceeds the standard number of control steps.
2. MCA = 1.25 x FLA; for proper wire sizing, refer to Table 310-16 of the NEC (National Electrical Code).
3. Sub-circuits are internal heater circuits of 48 amps or less.
4. Electric heat performance is not within the scope of AHRI standard 430 certification.
5. To avoid damage due to overheating, minimum face velocity cannot fall bellow 350 fpm.
6. Heaters up to (and including) 60 kW have 3 control steps; beyond 60 kW, 6 steps are standard.
7. Heater kW offering is controlled by ***AHU*Builder®** program. This table is for reference only.

Gas Furnace Identification

The gas heat section(s) for 39M air-handling units offer two styles of gas furnace: the gas-fired duct furnace and the gas-fired rack system. Air-handling units with the duct heater can have 1 or 2 gas sections with a single duct furnace in each section. Air-handling units with the rack system can have 1 or 2 gas sections with 1 to 5 racks in each section (up to 10 racks total). Duct furnaces are Carrier Gas Heat Codes 11-35. Rack furnaces are Carrier Gas Heat Codes 36-62. Refer to Fig. 10.

To determine the type of gas heating system in the air-handling unit, open the burner side door to view the burner assembly. Gas-fired duct furnaces have the burners arranged vertically. See Fig. 146. Rack system furnaces have the burners arranged horizontally. See Fig. 147.

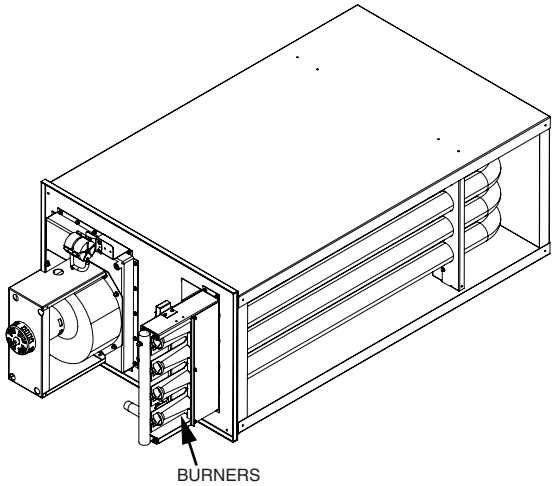

Fig. 146 — Gas-Fired Duct Furnace Burner Assembly

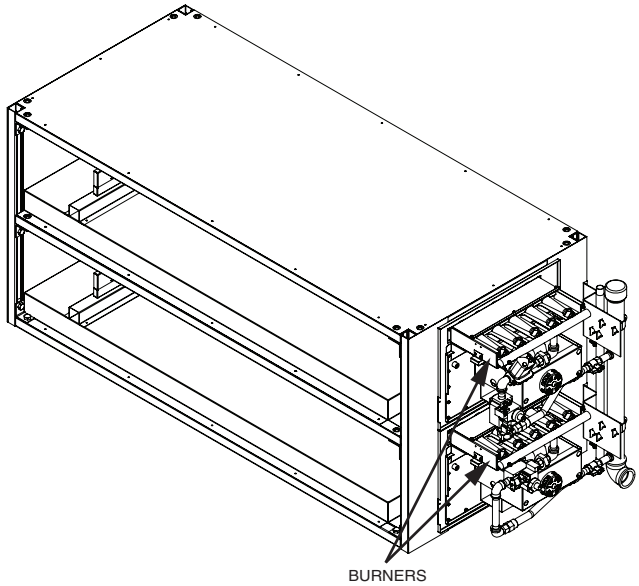

Fig. 147 — Gas-Fired Rack System Burner Assembly

Follow the appropriate installation instructions below for the style of gas furnace included in the air-handling unit.

Gas-Fired Duct Furnaces

IMPORTANT: This furnace is not listed or suitable for separated combustion air supply.

IMPORTANT: This furnace is not listed or suitable for drying or process applications. Use in such applications voids any warranty and manufacturer disclaims any responsibility for the duct furnace and/or application.

INSTALLATION REQUIREMENTS

Gas-fired duct furnaces are factory installed. If circumstances require field installation of a gas furnace, it can only be installed in a factory-supplied gas heater section. All unit installations must be in accordance with the National Fuel Gas Code ANSI Z223.1 (NFPA 54) in the United States and Can/CGA-B149 Installation Code in Canada, and all other applicable local codes and ordinances. These requirements include but are not limited to:

- Combustion air supply to the heating equipment
- Venting of the products of combustion (flue gases)
- Gas supply, piping and connections
- Unit location and clearances

All electrical equipment must be grounded and wired in accordance with the National Electric Code (ANSI/NFPA 70) in the United States, and the Canadian Electric Code (CSA C22.1), in Canada.

Control Wiring (Duct System Furnace)

Multiple-heater systems are controlled by a Vernier stage controller. This control provides modulation of the lead gas furnace and staging control of additional furnaces in the assembly. The stage controller requires a Heat Enable contact closure and a 0 to 10 VDC analog input to operate the system. Figure 148 shows the typical terminal connections for the Heat Enable and the Analog Input signal. Also, refer to the wiring diagrams provided for electrical connections included in the furnace section. A Control Instruction Sheet with the Sequence of Operation for the system under the supervision of the stage controller is also available in the information packet. See Fig. 148 for a typical wiring diagram.

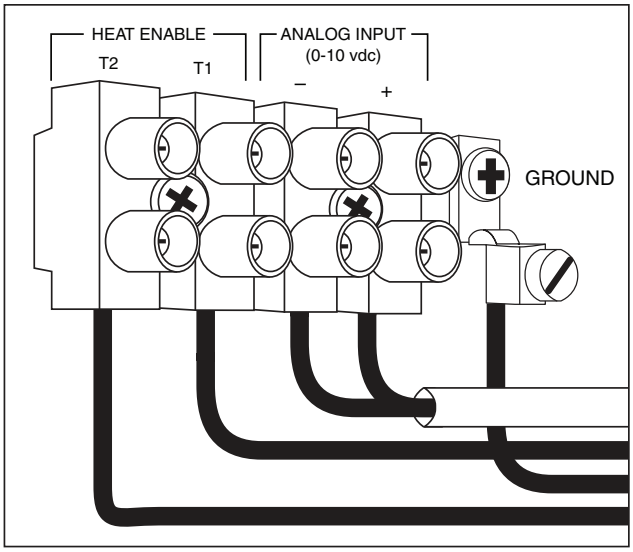

Fig. 148 — Gas-Fired Duct System Furnace Typical Wiring Diagram

SINGLE-POINT POWER (SPP) (OPTION)

If single-point power option has been requested, power wiring will be factory installed from the Gas Furnace control panel to the unit single-point power enclosure installed on the unit supply fan.

NOTE: Power wiring will then be brought into the SPP box for this option (see start-up page 215).

VERIFICATION

Verify the following before placing the equipment into service:

- Electrical supply matches the heater voltage marked on the duct furnace Rating Plate.
- Gas supply provided matches the Gas Type marked on the duct furnace Rating Plate.
- Furnace is installed in orientation marked on vestibule. Orientation is specific to airflow direction through the heating section of the unit.
- There is an adequate supply of fresh air for the combustion and ventilation process. Combustion air openings in the cabinet should be sized to provide 1 sq in. of free area per 4000 Btuh of input.

CAUTION

The presence of chlorine vapors in the combustion air supplied to gas-fired heaters presents a substantial corrosion hazard.

- A properly designed vent system is connected to the heating unit to convey the products of combustion (flue gases) outside the building. For outdoor applications be sure the flue gases are directed away from any combustion air inlets.
- Duct furnace assembly is installed in a non-combustible duct or cabinet on the positive pressure side of the circulating air blower.
- An air flow proving switch is installed and wired to prove operation of the system circulating air blower.
- An auxiliary manual reset limit switch is installed to shut off furnace in the event of low airflow conditions due to filter blockage, coil blockage and or damper failure.
- A drain tube is installed for disposal of condensate, if the heating unit is equipped with modulating controls or is located downstream of cooling system.
- Equipment access panels and doors are sized and located to provide easy access for servicing, adjustment and maintenance of the heating units installed.

WARNING

Gas-fired furnaces are not designed for use in hazardous atmospheres containing flammable vapors or combustible dust, in atmospheres containing chlorinated or halogenated hydrocarbons, or in applications with airborne substances containing silicone. Use in these environments may result in damage to equipment and personal injury.

CONDENSATE DRAINS

In furnace applications operating with modulating controls, temperature rises below 40°F (4.4°C), or with outside make-up air, some condensation may occur in the heating cycle. In these applications connection of a condensate drain line is required to avoid condensate build-up and possible heat exchanger damage.

If heating section is located downstream of a refrigeration system or cooling coil, condensation can occur during operation of the air conditioning, resulting in condensation from warm, moist air in the heat exchanger tubes and flue collector. This condensate is not harmful to the heat exchanger provided it is drained continuously. For these applications a 1/4-in. NPT connection is provided for attachment of condensate drain line to remove condensate from heat exchanger.

A P-trap is recommended as the system operates under a negative pressure. The use of a "Tee" fitting is recommended to allow for priming and cleaning the trap. Use a plug in the cleanout opening. See Fig. 149.

CAUTION

Do not use copper tubing for condensate drain lines. Flue gas condensate is slightly acidic and may corrode lines.

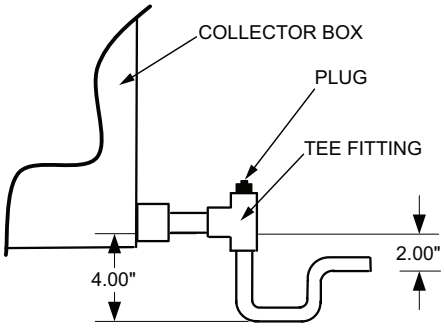

Fig. 149 — Condensate Drain

FURNACE COMPONENT IDENTIFICATION

See Fig. 150 for single-unit gas furnace components.

OPERATING AND SAFETY CONTROLS

The following controls are provided for the duct furnace:

Combustion Air Pressure Switch

An air pressure switch is provided as part of the control system to verify combustion airflow through induced-draft fan (ID fan) by monitoring the difference in pressure between the ID fan and the atmosphere. If sufficient negative pressure is not present, indicating lack of proper air movement through heat exchanger, the switch opens shutting off gas supply though the ignition control module. On units with two-speed draft inducer operation, a dual air pressure switch is used, monitoring high and low speed pressures. The air pressure switches have fixed settings and are not adjustable.

Rollout Switch (Manual Reset)

The duct furnace is equipped with manual reset rollout switch(es) in the event of burner flame rollout. The switch will open on temperature rise and shut off gas supply through the ignition control module. Flame rollout can be caused by insufficient airflow for the burner firing rate (high gas pressure), blockage of the vent system or in the heat exchanger. The duct furnace should not be placed back in operation until the cause of rollout condition is identified. The rollout switch can be reset by pressing the button on the top of the switch.

Primary High Limit Switch

To prevent operation of the duct furnace under low airflow conditions, the unit is equipped with a fixed temperature high limit switch mounted on the vestibule panel. This switch will shut off gas to the heater through the ignition control module before the air temperature reaches 250°F (121.1°C). Reduced airflow may be caused by restrictions upstream or downstream of the circulating air blower, such as dirty or blocked filters or restriction of the air inlet or outlet to the unit. The high limit switch will shut off the gas when the temperature reaches its set point and then automatically reset when the temperature drops to 30°F (16.7°C) below the set point, initiating a furnace ignition. The furnace will continue to cycle on limit until the cause of the reduced airflow is corrected.

Ignition Control Module

Monitors furnace function and provides safety interlocks. Ignition control modules are available having a number of different operating functions. Refer to Sequence of Operation and Control

Diagnostic data sheets provided in the instruction package for a detailed description of the control features, operation and troubleshooting for the model control installed. Check the furnace section for this information, or contact your Carrier service representative.

COMBUSTION AIR SUPPLY

All gas-fired furnaces need an ample supply of air for proper and safe combustion of the fuel gas. If sufficient quantities of combustion air are not available to the heater, poor combustion and inefficient operation will result.

For outdoor installations, the heating unit cabinet combustion air openings should be sized to provide 1 sq in. of free area per 4000 Btuh of input. Combustion air inlet and flue gas outlet must be located in the same pressure zone to minimize effects of wind on burner and heater performance.

For indoor installations, locate heating unit to ensure an adequate supply of fresh air to replace air used in the combustion and ventilation process. Install air openings that provide a total free area in accordance with the National Fuel Gas Code (ANSI Z223.1 or NFPA 54) in the United States or CAN/CGA B-149 Installation Code in Canada.

Do not install unit in a confined space (a space whose volume is less than 50 cubic feet per 1000 Btuh of furnace input rating) without providing wall openings leading to and from the space. Provide openings near floor and ceiling to provide air for combustion and ventilation. Size openings for total Btuh of all appliances in confined space and provide openings as follows:

- Air from inside building — openings 1 sq in. free area per 1000 Btuh, but never less than 100 sq in.
- Air from outside through a duct — openings 1 sq in. free area per 2000 Btuh
- Air direct from outside — openings 1 sq in. free area per 4000 Btuh

VENTING

Safe operation of indirect-fired gas furnaces requires a properly operating venting system that vents all the products of combustion (flue gases) to the outside atmosphere.

⚠ WARNING

Failure to provide proper venting affects furnace performance and may result in a health hazard which could cause serious personal injury or death.

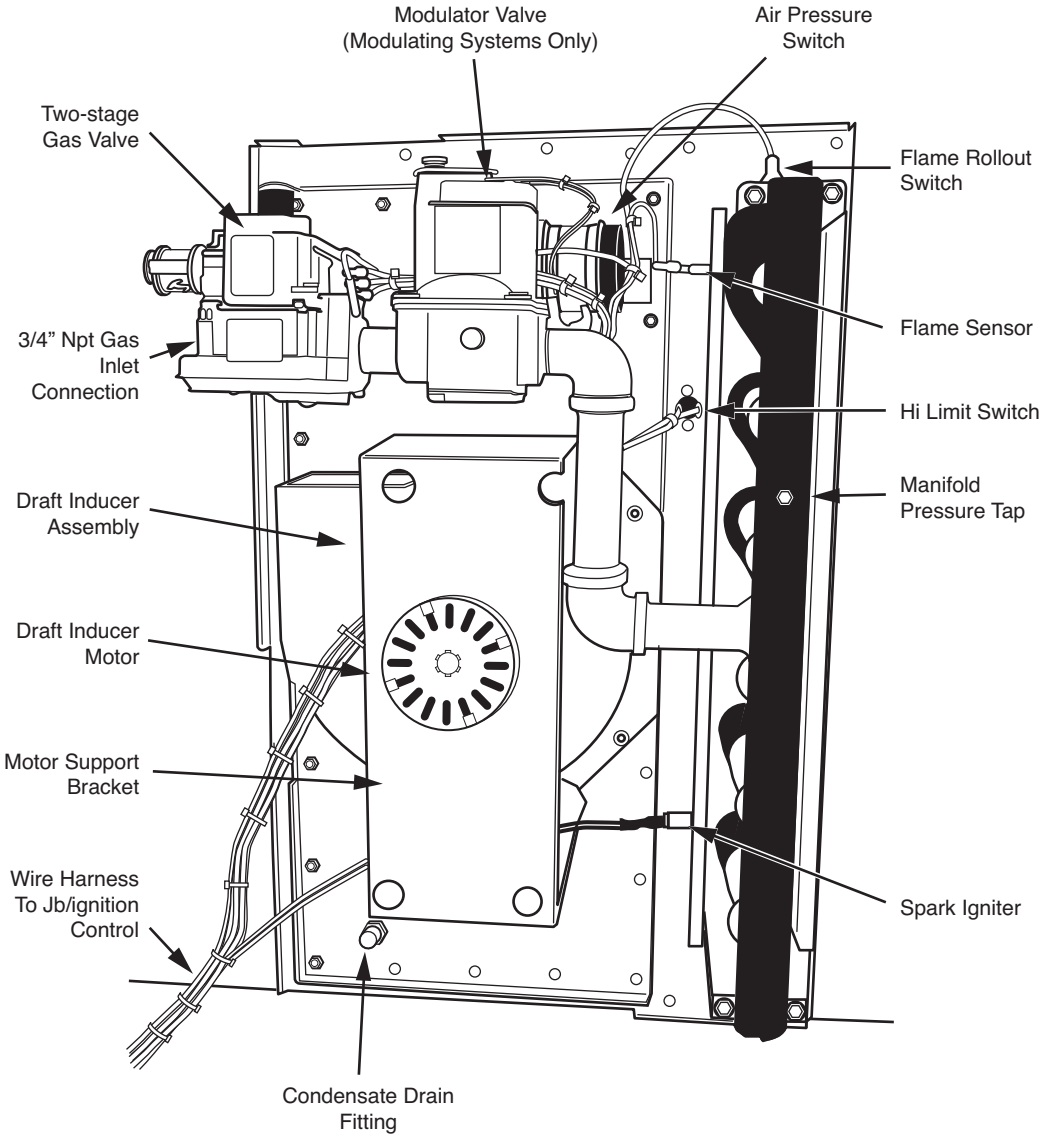

Fig. 150 — Gas-Fired Duct Furnace Components

Venting for Outdoor Installations

The venting system is designed for direct discharge of flue gases to the outdoors. The vent discharge opening should be located to provide an unobstructed discharge to the outside and should be located as far from the combustion air inlet as possible but in the same pressure zone.

The vent duct should pitch down toward the outlet, to ensure that any condensate that occurs in the vent duct drains away from the combustion blower fan housing. The duct opening should be protected by a 1/2 in. x 1/2 in. (12 mm x 12 mm) mesh screen. An optional rainhood may be used over the discharge opening to prevent wind-driven rain from entering the vent duct, but should not intersect the flue gas discharge path. See Fig. 151.

IMPORTANT: Outdoor units must be *individually* vented.

Venting For Indoor Installations

All duct furnaces must be connected to a venting system to convey flue gases outside of the heated space. Vent systems must be sized and installed in accordance with ANSI Z223.1 (NFPA 54) or in Canada CAN/CGA - B149.

There are two methods for venting indoor furnace installations: vertical venting and horizontal venting.

Vertically Vented Duct Furnaces (Category I)

Proper venting of the heating units is the installer's responsibility. Vent piping is supplied by others. When operated with the venting system in place, proper duct furnace operation must be verified, including flue gas analysis of each connected furnace.

Use single wall or double wall (Type B) vent pipe of diameters listed in the following table.

INPUT RATING (BTUH)	INPUT RATING (W)	VENT PIPE DIAMETER
75,000 - 149,999	21,980 - 43,958	5 in. (126 mm)
150,000 - 400,000	43,960 - 117,228	6 in. (152 mm)
401,000 - 600,000	117,229 - 175,842	7 in. (178 mm)

Maximize the height of the vertical run of vent pipe. A minimum of 5 ft (1.5 m) of vertical pipe is required. The top of the vent pipe must extend at least 2 ft (0.61 m) above the highest point on the roof. (Use Listed Type B vent for external runs.) An approved weatherproof vent cap must be installed to the vent termination.

Horizontal runs must not exceed 75% of the vertical height of the vent pipe, up to a maximum of 10 ft (3 m). Horizontal runs should be pitched upward 1/4 in. per ft (21 mm/m) and should be supported at 3 ft (1 m) maximum intervals.

Design vent pipe runs to minimize the use of elbows. Each 90-degree elbow is equivalent to 5 ft (1.5 m) of straight vent pipe run.

Vent pipe should not be run through unheated spaces. If such runs cannot be avoided, insulate vent pipe to prevent condensation inside vent pipe. Insulation should be a minimum of 1/2 in. (12.7 mm) thick, foil-faced material suitable for temperatures up to 500°F (260°C). Vent connectors serving Category 1 heaters must not be connected into any portion of a mechanical draft system operating under positive pressure. See Fig. 152.

IMPORTANT: Dampers must *not* be used in vent piping runs. Spillage of flue gases into the occupied space could result.

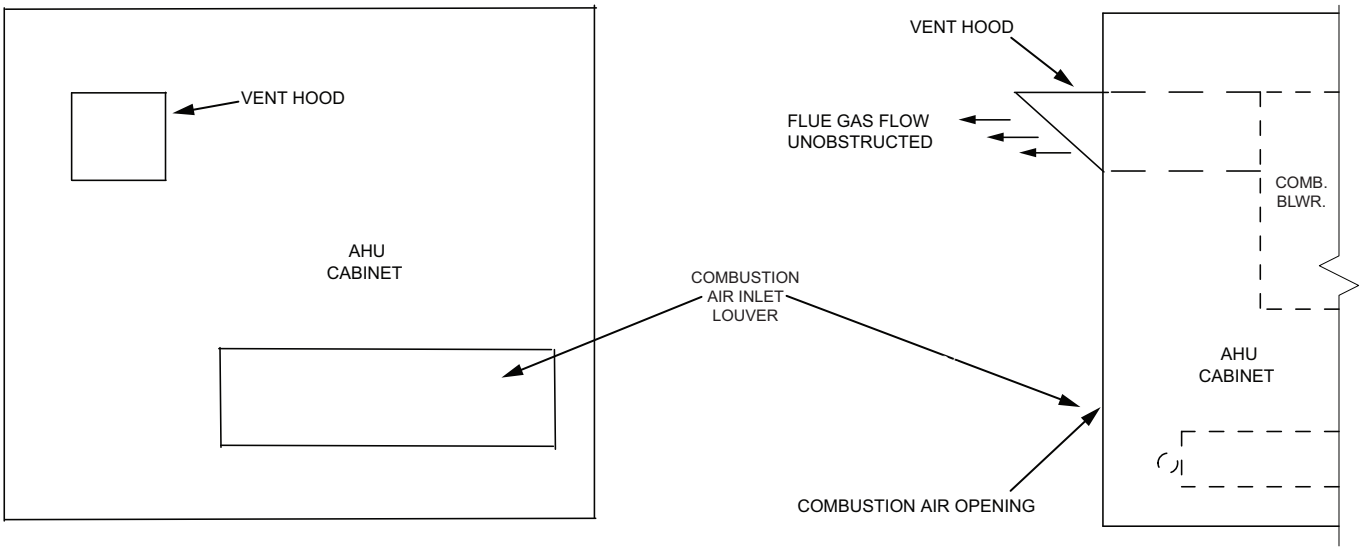

Fig. 151 — Outdoor Horizontal Venting

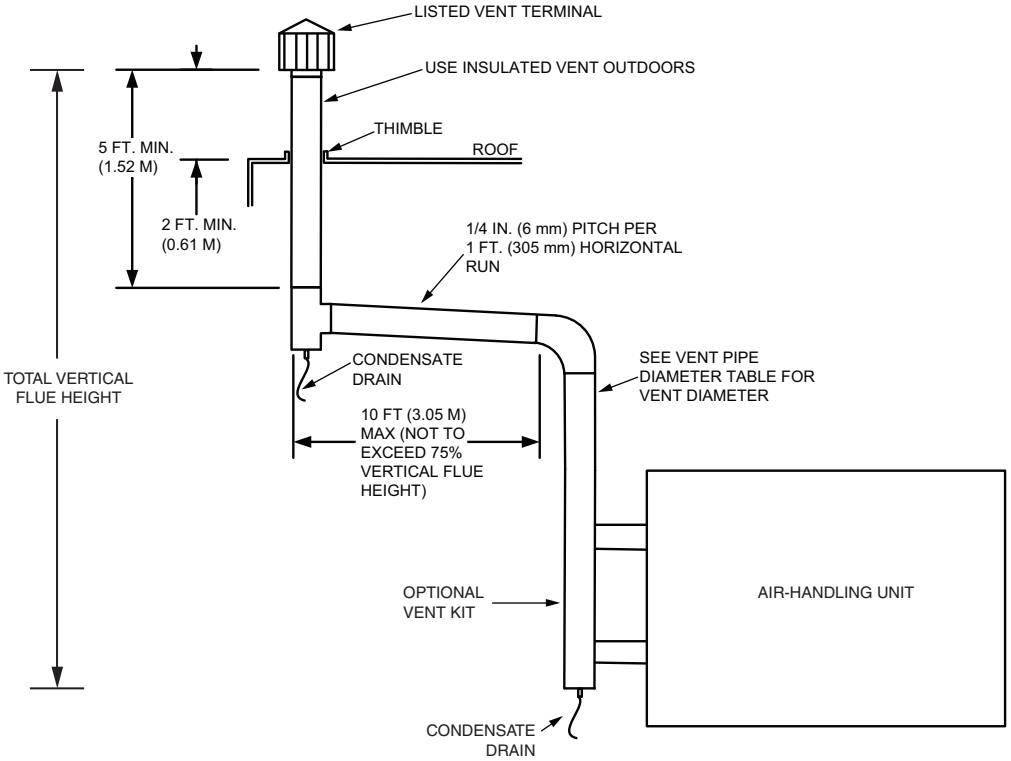

NOTE: See the section "Vertically Vented Duct Furnaces" on page 199 for vent pipe diameters.

Category I Vertical Furnace Venting (through Roof)
(Manifold furnace vents acceptable)

Fig. 152 — Indoor Vertical Venting

Horizontally Vented Duct Furnaces (Category III)

Pressures in Category III venting systems are positive and therefore care must be taken to avoid flue products from entering the heated space. Use only vent materials and components that are UL listed and approved for Category III venting systems.

All vent pipe joints must be sealed to prevent leakage into the heated space. Follow instructions provided with approved venting materials used. The proper vent pipe diameter must be used, to ensure proper venting of combustion products. See the section Vertically Vented Duct Furnaces on page 199 for vent pipe diameters.

The total equivalent length of vent pipe must not exceed 50 ft (15.25 m). Equivalent length is the total length of straight sections, plus 5 ft (1.52 m) for each 90 degree elbow and 2.5 ft (0.76 m) for each 45 degree elbow. The vent system must also be installed to prevent collection of condensate. Pitch horizontal pipe runs downward 1/4 in. per ft (21 mm/m) toward the outlet to permit condensate drainage. See Fig. 153.

Insulate vent pipe exposed to cold air or routed through unheated areas. Also insulate vent pipe runs longer than 10 ft (3 m). Insulation should be a minimum of 1/2 in. (12.7 mm) thick, foil-faced material suitable for temperatures up to 500°F (260°C). Maintain 6 in. (152 mm) clearance between vent pipe and combustible materials.

A vent cap *listed for horizontal venting* must be provided. Vent cap inlet diameter must be same as the required vent pipe diameter. The vent terminal must be at least 12 in. (305 mm) from the exterior wall that it passes through to prevent degradation of building material by flue gases.

The vent terminal must be located at least 1 ft (305 mm) above grade, or in snow areas, at least 3 ft (1 m) above snow line to prevent blockage. Additionally, the vent terminal must be installed with a minimum horizontal clearance of 4 ft (1.2 m) from electric meters, gas meters, regulators or relief equipment.

***Each duct furnace must have its own individual vent pipe and terminal.* Do not connect vent system from horizontally vented units to other vent systems or a chimney.**

IMPORTANT: Through-the-wall vents shall not terminate over public walkways, or over an area where condensate or vapor could create a nuisance or hazard.

GAS SUPPLY, PIPING, AND CONNECTIONS

Installation of piping must conform with local building codes and ordinances, or in the absence of local codes with ANSI Z223.1, the National Fuel Gas Code. In Canada, installation must be in accordance with CAN/CGA-B149.1 for natural gas and B149.2 for propane units.

Use a pipe sealant resistant to LP gases on gas supply connections to heater. Gas piping must be sized for the total Btu input of all furnaces or units serviced by a single supply.

Be sure that gas regulators servicing more than one heater have the proper pipe and internal orifice size for the total input of all heating units serviced by the regulator. See Fig. 154.

Individual duct furnaces require a minimum inlet gas pressure as shown in Table 46.

Table 46 — Inlet Gas Pressures

GAS SUPPLY	MINIMUM (in. wg): 50,000 - 400,000 Btuh MODELS	MINIMUM (in. wg): 401,000 AND HIGHER Btuh MODELS	MAXIMUM (in. wg)
Natural Gas	5.0	6.0	13.5
Propane Gas	11.0	12.0	13.5

IMPORTANT: Gas pressure to appliance controls must never exceed 13.5 in. wg (1/2 psig).

The individual duct furnace inlet gas supply pipe connection size is 3/4 in. NPT for gas inputs up to 400,000 Btuh and 1 in. NPT for gas inputs between 401,000 and 600,000 Btuh for all control systems.

The duct furnace gas piping was leak tested prior to shipping the furnace. However, during shipping and installation connections may have loosened. Check for leaks using a soap solution and correct any leaks before placing furnace in operation.

A drip leg (sediment trap) and a manual shut-off valve must be provided immediately upstream of the gas control on the heating unit. To facilitate servicing of unit, installation of a union is recommended. See Fig. 155.

Pressure Testing

Connect a fitting and pressure gauge suitable for measuring gas pressure to 1/8 in. NPT tap provided on the manual shut-off valve tapping (see Fig. 155) or the inlet side of the gas valve (Fig. 156-159). For multiple heater installations, measure inlet pressure to each heater serviced by a single regulator with all heaters in operation. See Fig. 154.

IMPORTANT: When pressure testing at 1/2 psig or less, close the manual shut-off valve on the appliance before testing. When pressure testing the gas supply line at 1/2 psig or greater, close the manual shut-off valve and disconnect the heater from supply line to be tested. Cap or plug the supply line.

⚠ WARNING

All field gas piping must be pressure and leak-tested prior to operation. Never use an open flame to check for leaks as combustion and personal injury may result. Use a soap solution or other leak detecting solution.

NOTE: See the section, "Vertically Vented Duct Furnaces," on page 199 for vent pipe diameters.

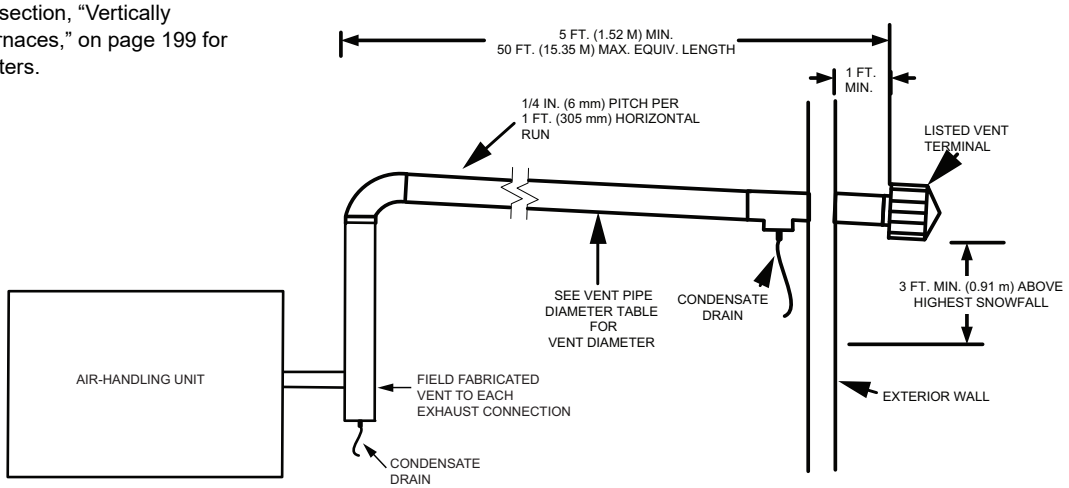

Category III Horizontal Furnace Venting (through Sidewall) (Only dedicated furnace venting permitted. Each furnace must have its own individual vent pipe and terminal.)

Fig. 153 — Indoor Horizontal Venting

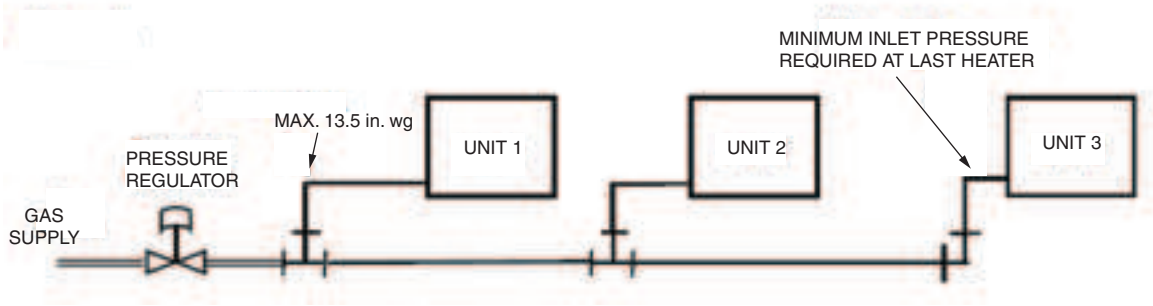

Fig. 154 — Inlet Pressure for Multiple Heaters

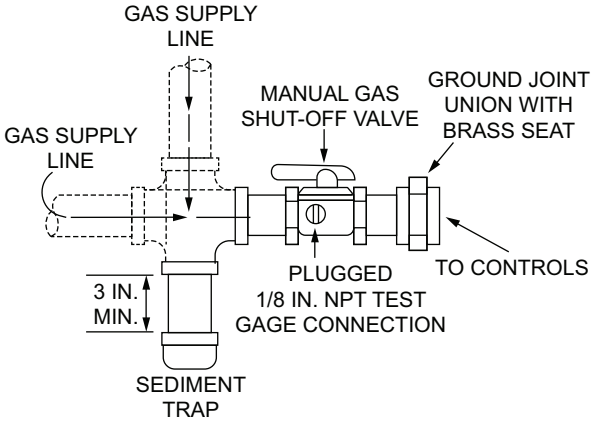

Fig. 155 — Sediment Trap, Shut-Off Valve, and Union

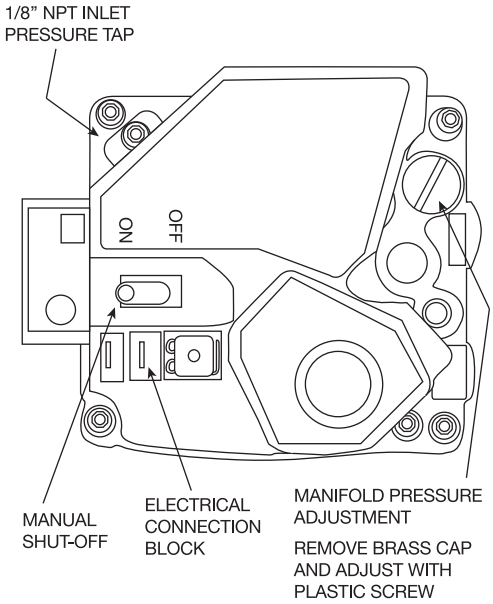

Fig. 156 — On/Off (1-Stage) Gas Valve

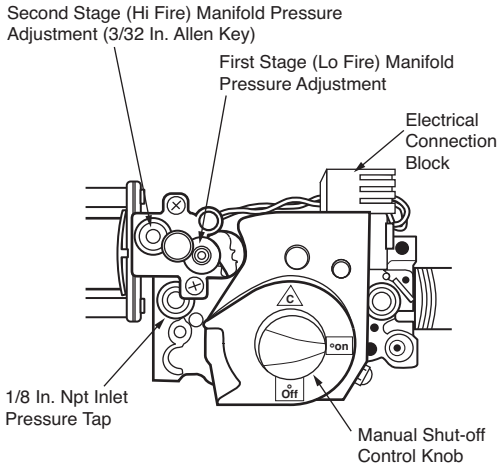

Fig. 157 — 2-Stage Gas Valve

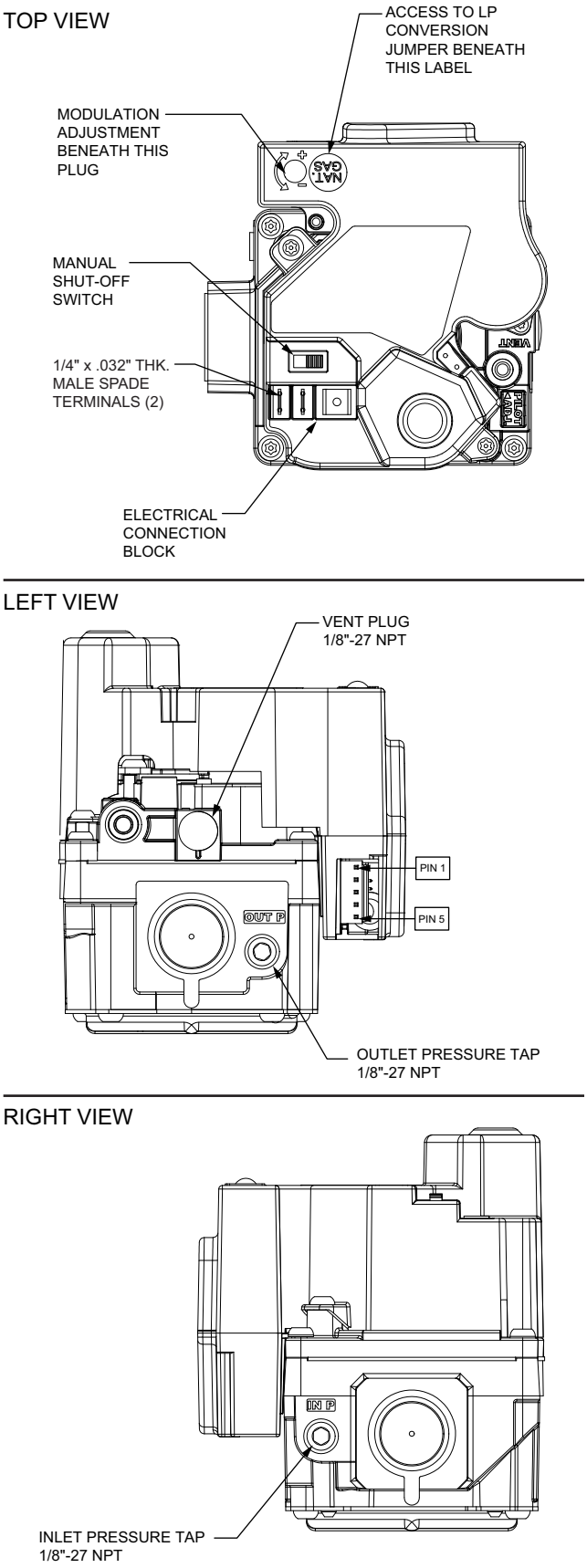

Fig. 158 — White-Rodger 36H27 Gas Valve (Top View, Left View and Right View)

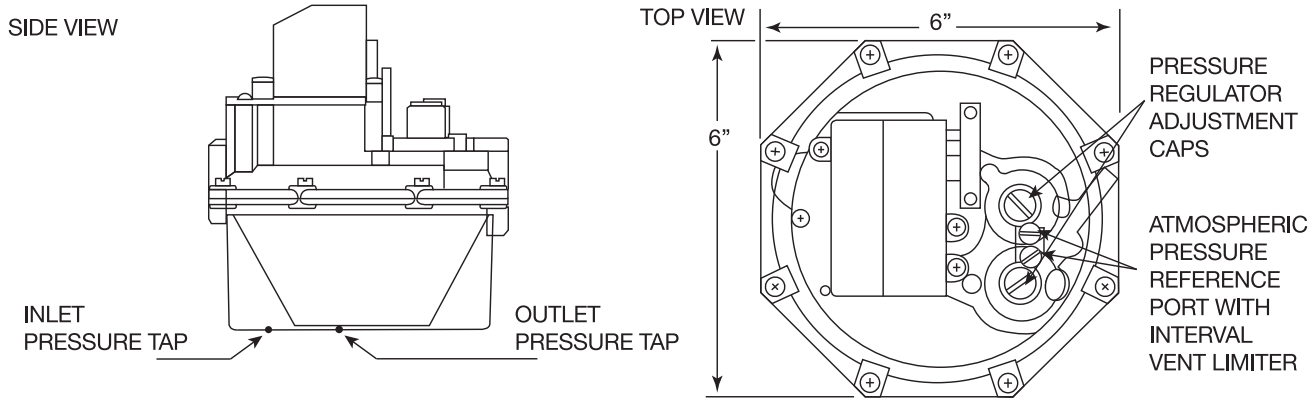

Fig. 159 — Honeywell V8944 Gas Valve

Gas-Fired Rack System Furnaces

⚠ WARNING

Gas-fired furnaces are not designed for use in hazardous atmospheres containing flammable vapors or combustible dust, in atmospheres containing chlorinated or halogenated hydrocarbons, or in applications with airborne substances containing silicone. Use in these environments may result in equipment damage and personal injury.

IMPORTANT: This furnace assembly is not listed or suitable for separated combustion air supply.

IMPORTANT: This furnace assembly is not listed or suitable for drying or process applications. Use in such applications voids any warranty and manufacturer disclaims any responsibility for the duct furnace and/or application.

INSTALLATION REQUIREMENTS

Gas furnaces are factory installed. If circumstances require field installation of a gas furnace, it can only be installed in a factory-supplied gas heater section. All unit installations must be in accordance with the National Fuel Gas Code ANSI Z223.1 (NFPA 54) in the United States and Can/CGA-B149 Installation Code in Canada, and all other applicable local codes and ordinances. These requirements include but are not limited to:

- Combustion air supply to the heating equipment
- Venting of the products of combustion (flue gases)
- Gas supply, piping and connections
- Unit location and clearances

All electrical equipment must be grounded and wired in accordance with the National Electric Code (ANSI/NFPA 70) in the United States, and the Canadian Electric Code (CSA C22.1), in Canada.

CONTROL WIRING (RACK SYSTEM FURNACE)

Multiple-heater systems are controlled by a Vernier stage controller. This control provides modulation of the lead gas furnace and staging control of additional furnaces in the assembly. The stage controller requires a Heat Enable contact closure and a 0 to 10 VDC analog input to operate the system. Figure 160 shows the typical terminal connections for the Heat Enable and the Analog Input signal. Also, refer to the wiring diagrams provided for electrical connections included in the furnace section. A Control Instruction Sheet with the Sequence of Operation for the system under the supervision of the stage controller is also available in the information packet. See Fig. 160 for a typical wiring diagram.

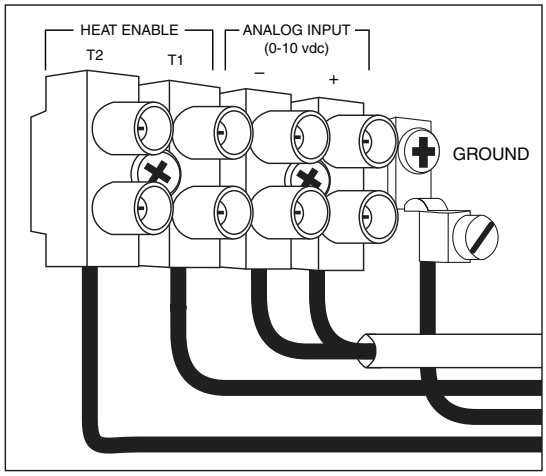

Fig. 160 — Gas-Fired Rack System Furnace Typical Wiring Diagram

VERIFICATION

Verify the following before placing the equipment into service:

- Electrical supply matches the heater voltage marked on the furnace Rating Plate.
- Gas supply provided matches the Gas Type marked on the furnace Rating Plate.
- Furnace is installed in orientation marked on vestibule. Orientation is specific to airflow direction through the heating section of the unit.
- There is an adequate supply of fresh air for the combustion and ventilation process. Combustion air openings in the cabinet should be sized to provide 1 sq in. of free area per 4000 Btuh of input.

⚠ CAUTION

The presence of chlorine vapors in the combustion air supplied to gas-fired heaters presents a substantial corrosion hazard.

- A properly designed vent system is connected to the heating unit to convey the products of combustion (flue gases) outside the building. For outdoor applications be sure the flue gases are directed away from any combustion air inlets.
- Rack furnace assembly is installed in a non-combustible duct or cabinet on the positive pressure side of the circulating air blower.

- An airflow proving switch is installed and wired to prove operation of the system circulating air blower.
- An auxiliary manual reset limit switch is installed to shut off furnace in the event of low airflow conditions due to filter blockage, coil blockage and or damper failure.
- A drain tube is installed for disposal of condensate, if the heating unit is equipped with modulating controls or is located downstream of cooling system.
- Equipment access panels and doors are sized and located to provide easy access for servicing, adjustment and maintenance of the heating units installed.

CONDENSATE DRAINS

A CPVC condensate drain line is provided and connected to the individual heaters. In applications operating with modulating controls some condensation may occur in the heating cycle. In these applications connection of a condensate drain line is required to avoid condensate build-up and possible heat exchanger damage. Flue gas condensate is acidic. Refer to local codes and ordinances for proper disposal.

If heating section is located downstream of a refrigeration system or cooling coil, condensation can occur during operation of the air conditioning, resulting in condensation from warm, moist air in the heat exchanger tubes and flue collector. This condensate is not harmful to the heat exchanger provided it is drained continuously.

FURNACE COMPONENT IDENTIFICATION

See Fig. 161 for rack system gas furnace components.

OPERATING AND SAFETY CONTROLS

The following controls are provided for the gas furnace rack system:

System/Ignition Control Module

Ignition controls are available having a number of different operating functions.

IMPORTANT: Refer to Sequence of Operation Sheet, provided with heater documentation, for a detailed description of the control features for the model control installed. This documentation is located in the heater section, or contact your Carrier service representative.

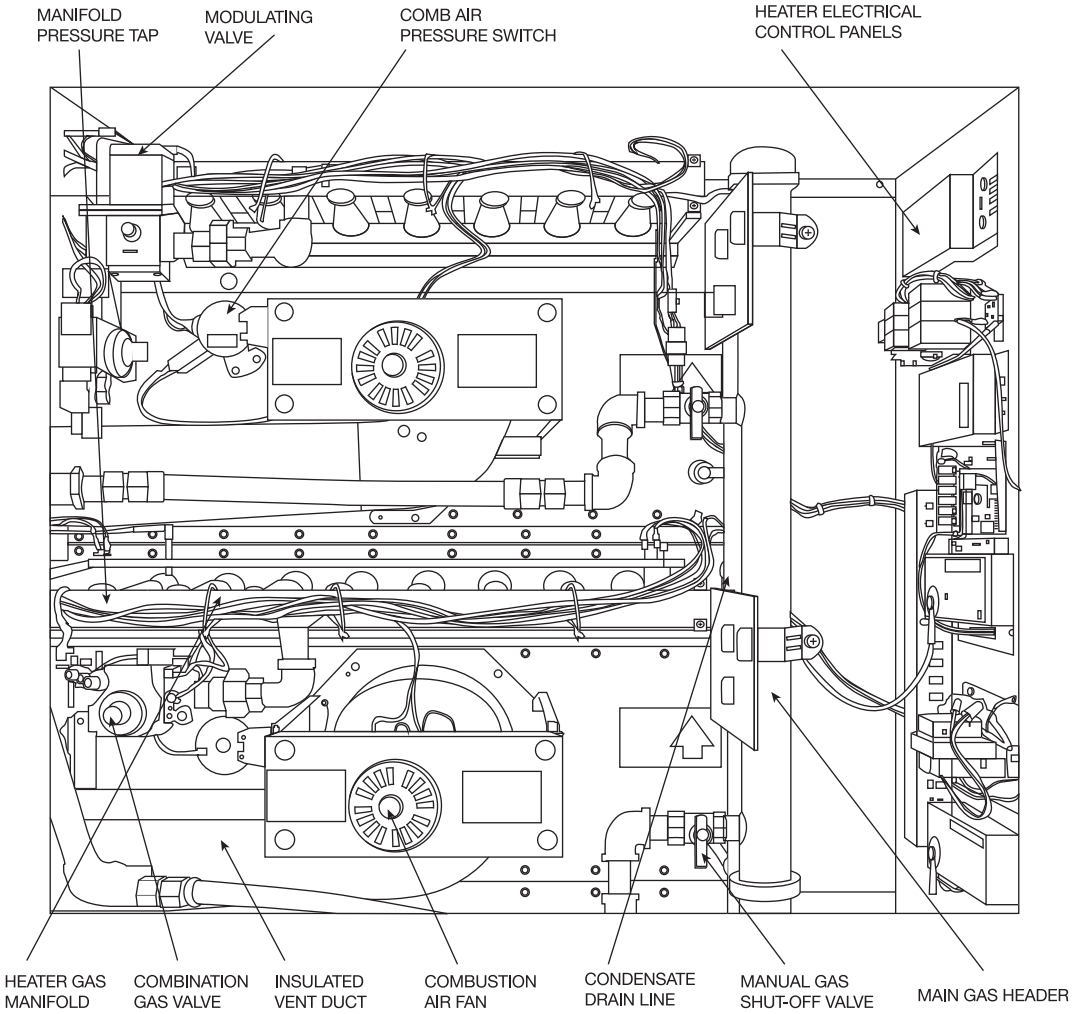

Fig. 161 — Gas-Fired Rack Furnace Components

Rollout Switch (Manual Reset)

The furnace module is equipped with manual reset rollout switch(es) in the event of burner flame rollout. The switch will open on temperature rise and shut off gas supply through the ignition control module. Flame rollout can be caused by insufficient airflow for the burner firing rate (high gas pressure), blockage of the vent system or in the heat exchanger. The furnace module should not be placed back in operation until the cause of rollout condition is identified. The rollout switch can be reset by pressing the button on the top of the switch.

High Limit Switch

The furnace module is equipped with a fixed-temperature high limit switch mounted on the vestibule panel. This switch shuts off gas to the heater through the ignition control module in the event of reduced circulating airflow over the heat exchanger. Reduced airflow can be caused by motor failure of the circulating air blower, dirty or blocked filters, or restriction of the air inlet or outlet to the unit. The high limit switch will automatically reset when the temperature drops to 30°F (16.7°C) below the set point. Determine the cause of the reduced airflow and correct.

Induced Draft Air Pressure Switch

An air pressure switch is provided as part of the control system to verify combustion airflow through the induced-draft fan. The pressure switch monitors the difference in pressure between the induced-draft fan and the atmosphere. If sufficient negative pressure is not present, the switch opens, shutting off gas supply though the ignition control module. The air pressure switches have fixed settings and are not adjustable.

COMBUSTION AIR SUPPLY

All gas-fired furnaces need an ample supply of air for proper and safe combustion of the fuel gas. If sufficient quantities of combustion air are not available to the heater, poor combustion and inefficient operation will result.

For outdoor installations, the heating unit cabinet combustion air openings should be sized to provide 1 sq in. of free area per 4000 Btuh of input. Combustion air inlet and flue gas outlet must be located in the same pressure zone to minimize effects of wind on burner and heater performance.

UNIT LOCATION AND CLEARANCES

For both outdoor and indoor installations, observe these requirements:

- Be sure unit is located with respect to building construction and other equipment to provide ready access and clearance to access panels or doors that must be opened to permit adjustment and servicing of the heating section.
- The heating section needs an ample supply of air for proper and safe combustion of the fuel gas. Do not block or obstruct air openings to the area where the heating unit is installed. Combustion air openings in the cabinet should be sized to provide 1 sq in. of free area per 4000 Btuh of input.
- Do not install unit where it may exposed to potentially explosive or flammable vapors.
- Do not locate unit in areas where corrosive vapors (such as chlorinated, halogenated, or acidic vapors) are present in the atmosphere or can be mixed with combustion air entering heater.

Clearance Requirements for Outdoor Installations

Observe the following additional requirements for outdoor installations:

- Provide at least 6 feet clearance to side of the unit, where the combustion air inlet or vent (flue) gas discharge is located, from walls, parapets or adjacent buildings or equipment.
- Unit must be installed with combustion air openings located at least one (1) ft above the average snow depth for the location.
- Do not locate unit near building ventilators or exhausts, or areas where corrosive chemical vapors can be drawn into combustion air supply.
- Do not install units in locations where flue products can be drawn in the adjacent building openings such as windows, fresh air intakes, etc.
- Be sure that vent discharge for flue gases is directed away from combustion air inlet and located to prevent flue products from being drawn into combustion air supply. Burner performance can be adversely affected by recirculation of flue products.
- Combustion air inlet and flue gas outlet must be located in the same pressure zone to minimize effects of wind on burner and heater performance.

Clearance Requirements for Indoor Installations

Observe the following additional requirements for indoor installations:

- Locate unit to ensure an adequate supply of fresh air to replace air used in the combustion and ventilation process.
- When locating units, it is important to consider that exhaust vent piping must connected to the outside atmosphere. Location should minimize the number of elbows or turns in vent piping.

GAS SUPPLY, PIPING, AND CONNECTIONS

Installation of piping must conform with local building codes and ordinances, or in the absence of local codes with ANSI Z223.1, the National Fuel Gas Code. In Canada, installation must be in accordance with CAN/CGA-B149.1 for natural gas and B149.2 for propane units.

Use a pipe sealant resistant to LP gases on gas supply connections to heater. Gas piping must be sized for the total Btu input of all furnaces or units serviced by a single supply.

Properly support gas valve with back-up wrench during supply pipe installation to prevent loosening valve or damage to burner assembly or manifold.

Gas piping must be sized for the total Btu input of all units (heaters) serviced by a single supply. A 2-in. NPT main gas header is provided as standard.

A service regulator must be provided to provide gas to the heater assembly at the proper pressure. Verify that the regulator installed is sized and properly orificed for total input of all heaters.

A drip leg (sediment trap) and a manual shut-off valve must be provided immediately upstream of the gas control on the heating unit. To facilitate servicing of unit, installation of a union is recommended. See Fig. 155.

Individual furnaces require a minimum inlet gas pressure as shown in Table 46.

IMPORTANT: Gas pressure to appliance controls must never exceed 13.5 in. wg (1/2 psig).

Pressure Testing

A 1/8 in. NPT tap is provided on the inlet side of the gas valve to the heater. See Fig. 156-159. A fitting suitable for connection to a pressure gauge capable of measuring gas pressure should be connected to each heater serviced by a single regulator so that gas pressure at each heater can be measured with all heaters in operation.

IMPORTANT: When pressure testing at 1/2 psig or less, close the manual shut-off valve on the appliance before testing. When pressure testing the gas supply line at 1/2 psig or greater, close the manual shut-off valve and disconnect the heater from supply line to be tested. Cap or plug the supply line.

⚠ WARNING

All field gas piping must be pressure and leak-tested prior to operation. Never use an open flame to check for leaks. Personal injury may result. Use a soap solution or other leak detecting solution.

Pressure/leak test all connections prior to putting unit in service. The furnace gas piping was leak-tested prior to shipping. However, during shipping and installation connections may have loosened. Check for leaks using a soap solution and correct any leaks before placing furnace in operation.

VENTING

Gas furnaces must be connected to a properly designed venting system to convey flue gases away from the heating system or outside of the heated space. See the section Installation Requirements on page 203 for reference to applicable codes and standards. The rack assembly requires a special venting system.

Venting for Outdoor Installations

For outdoor applications, a flue riser kit is available. See Fig. 162. In outdoor installations where the flue riser kit is not used, the venting system must be properly designed for the specific application by a manufacturer/provider of the listed type of venting systems. The connection from furnace-induced draft fans to round vent pipe requires custom adapters to ensure leak-free joints. Contact a venting system manufacturer for availability, if the venting system was not included with the heating system.

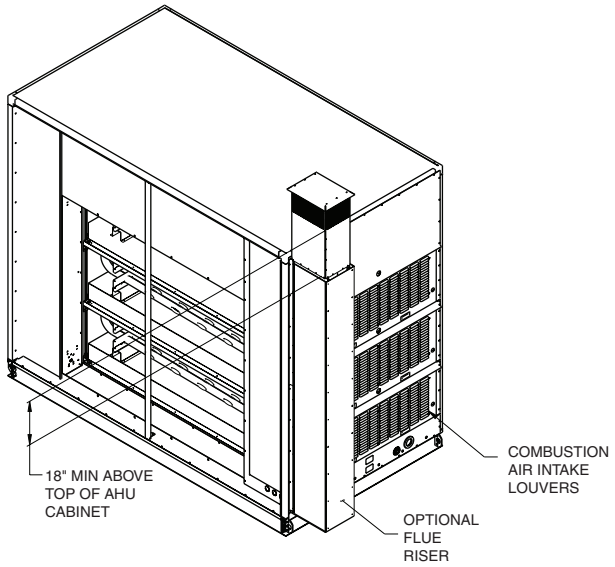

Fig. 162 — Outdoor Venting with Flue Riser Kit

Venting for Indoor Installations

For all indoor installations, a listed venting system must be properly designed for the specific application. A factory vent riser kit is available. See Fig. 163 for an example.

For indoor installations where the factory flue riser kit is not used, the venting system must be properly designed for the specific application by a manufacturer/provider of the listed type of venting systems. Connection from furnace-induced draft fans to round vent pipe requires custom adapters to ensure leak-free joints. Contact a venting system manufacturer for availability, if the venting system was not included with the heating system.

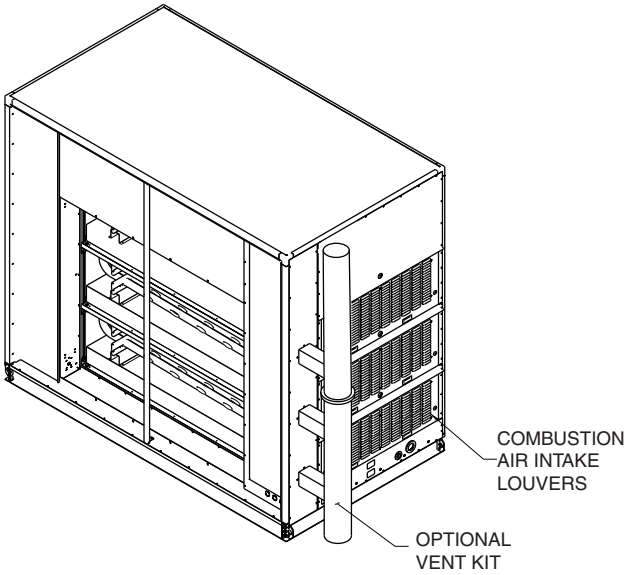

Fig. 163 — Indoor Venting with Flue Riser Kit

Vertical Vent (Category 1) System Installation

For all indoor rack system vertical vent installations, note the following for proper installation:

- See Fig. 164 for Category 1 indoor vertical vent system.
- Vent system must be sized and installed in accordance with ANSI Z223. 1 (NFPA 54). See Table 47 - Category 1 Vent Diameters.
- Use UL-441 Type B Vent materials.
- Minimize use of elbows and horizontal runs in vent piping
- Vent must terminate in a listed, weatherproof vent cap.
- Determine height from highest heater discharge point to roof of building. Vent pipe must extend at least 2 ft (0.61 m) above the highest point on the roof.
- Vent connectors serving Category 1 heaters must not be connected into any portion of a mechanical draft system operating under positive pressure.
- Separated combustion systems are not permitted in multiple heater assemblies.

Horizontal Vent System Installation

For all indoor rack system horizontal vent installations, note the following for proper installation:

- Horizontal vent installation must be power vented (gravity horizontal venting will not work and is not permitted).
- See Fig. 165 for indoor horizontal (powered) vent system.
- Vent system must be sized and installed in accordance with ANSI Z223.1 (NPFA 54). See Table 47.
- Use UL-441 Type B Vent materials.
- Install, maintain and operate the power venter and horizontal vent system in accordance with the instructions of the horizontal vent system supplier.
- Separated combustion systems are not permitted in multiple heater assemblies.

Table 47 — Category 1 Vent Diameters

INPUT RANGE	450 TO 750 MBTUH	800 TO 1200 MBTUH	1400 TO 2500 MBTUH
VENT PIPE ID (in.)	10	12	14

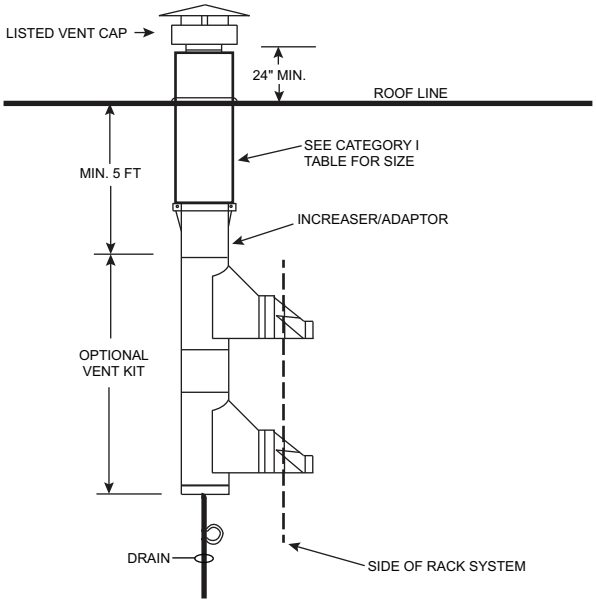

Fig. 164 — Category 1 Indoor Vertical Vent System

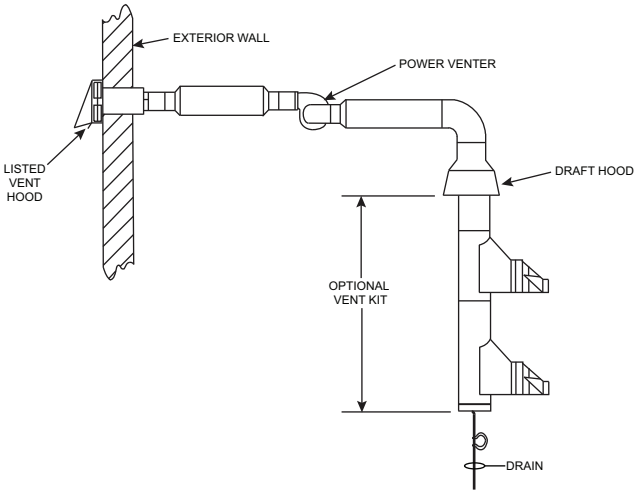

Fig. 165 — Indoor Horizontal Vent System

Energy Recovery Ventilation (ERV) Sections

CAUTION

The assembled sections will result in a unit center of gravity (CG) higher than the horizontal centerline. Exercise proper care when rigging, lifting and transporting. Units with a high CG will tip over more easily during installation than those with a lower CG.

RECEIVING AND INSPECTION

Inspect all sections for freight damage upon receipt. Inspect the cassette(s) mounted inside the section. The cassette consists of a frame, wheel assembly and segments. Verify that all wheels turn freely by hand (clockwise when viewed from the pulley side). Report any damage immediately to the freight company.

Main AHU

Verify that the gasket is installed between the roof cap and baserail (both sides). See Fig. 166.

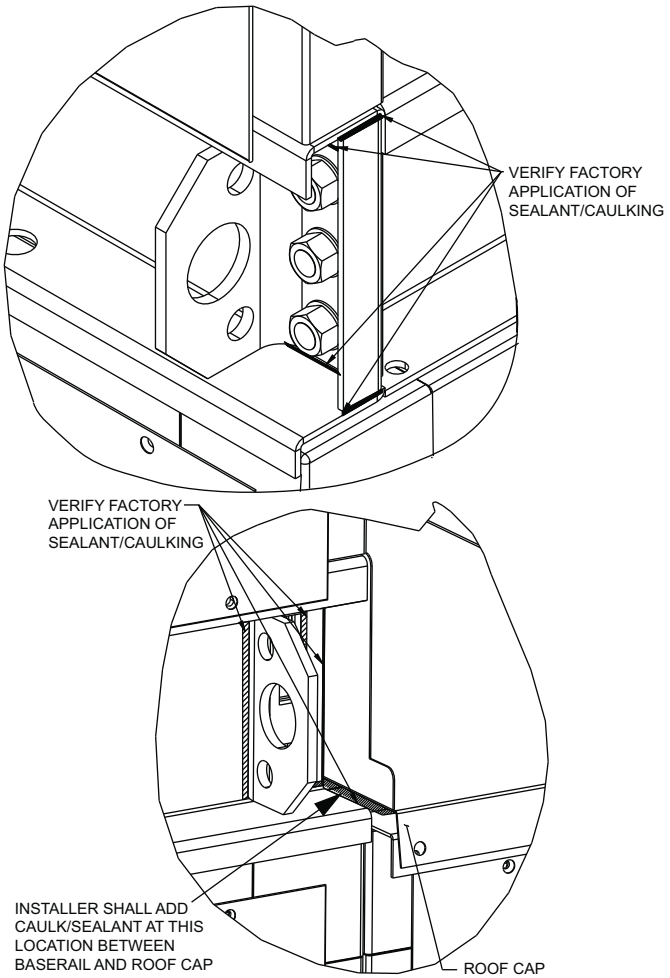

Fig. 166 — Verify Seals (6 in. baserail shown)

ERV Arrangement

Verify that caulk/sealant is applied at the ends of stacked baserails which connect to a frame as shown in Fig. 167.

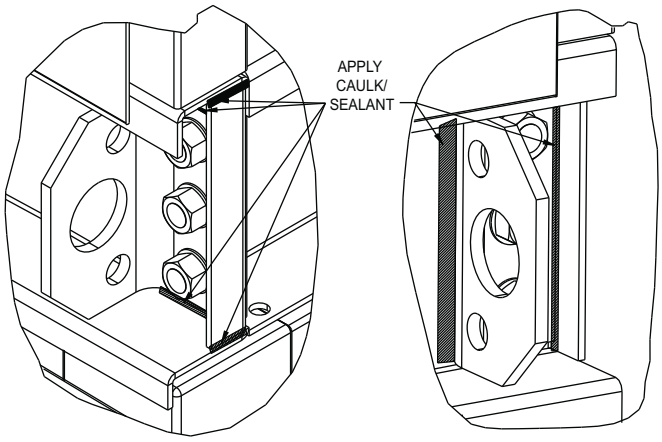

Fig. 167 — ERV Arrangement Sealant

ERV - Lower Level Sections

Verify that top perimeters of lower level shipping pieces have gaskets installed as shown in Fig. 168.

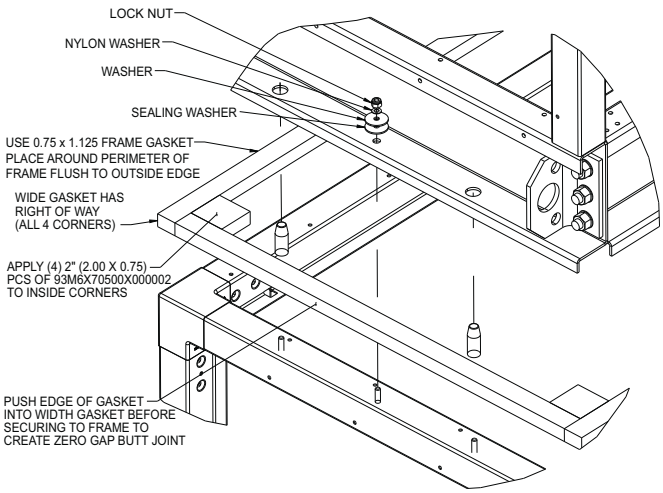

Fig. 168 — Verify Gasket Installation

Verify that outlet perimeters at the locations shown in Fig. 169 have 3/4 in. x 2 in. gasket installed as shown in Fig. 170.

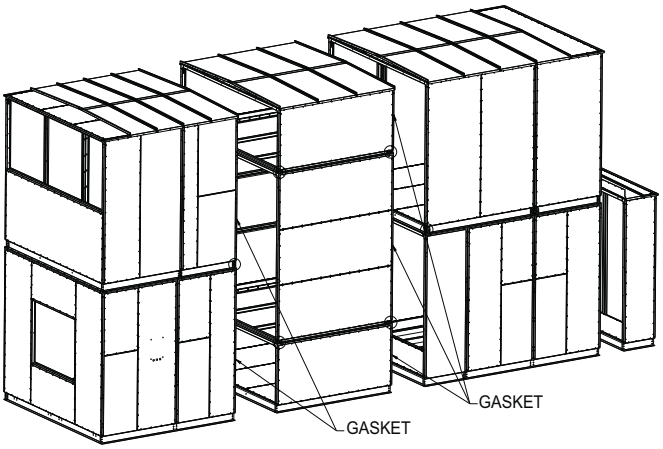

Fig. 169 — Outlet Perimeter Gaskets

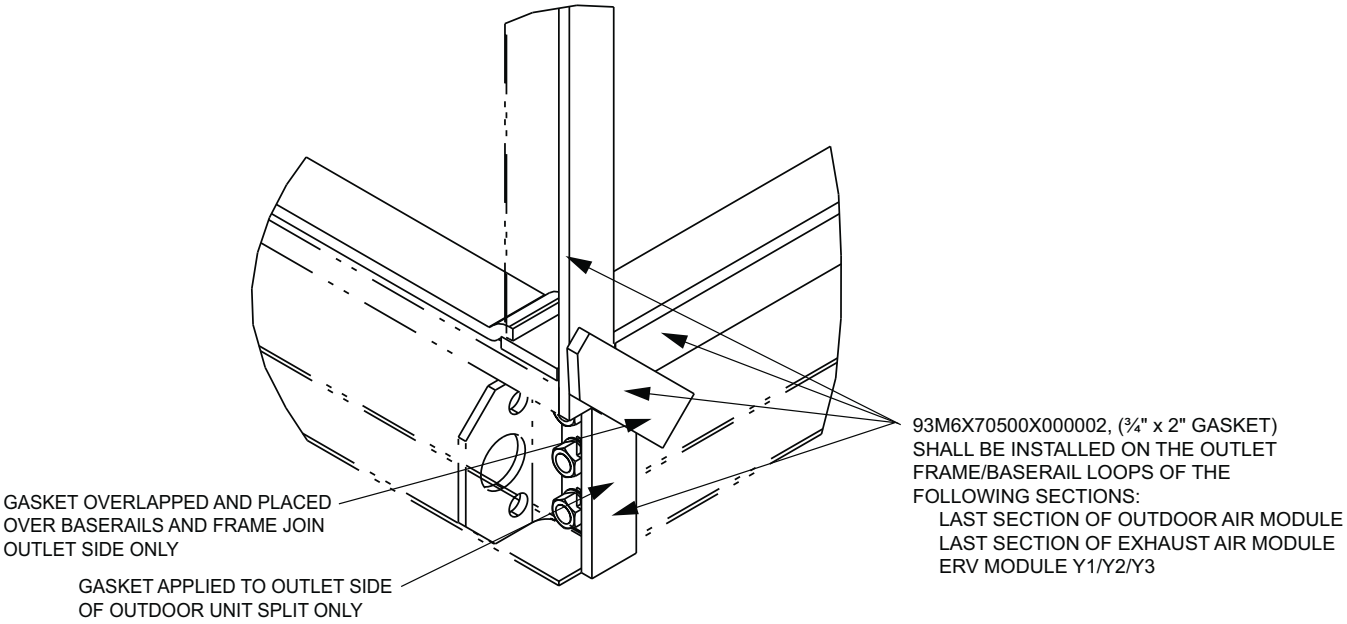

Fig. 170 — Gasket Installation

RIGGING AND STACKING

The ERV section sizes 03-14 are shipped stacked (fully assembled) and size 17 with 4, 6, or 8 in. baserails are shipped stacked (fully assembled). These units can be stacked and unstacked, as required, during installation by following the same procedure as for larger units described below.

The ERV section sizes 17 with 10 in. baserails and sizes 21-61 are shipped unstacked due to shipping height limitations. The lower sections are all assembled on baserails and shipped separately. The upper sections are also assembled on baserails and shipped separately. Rigging and setting the lower sections is the same as for a standard 39MN indoor or 39MW outdoor base unit. Refer to the Rigging Information label on the unit.

For sizes 36-61, the ERV wheel bypass sections are shipped stacked. upper section must be removed from lower section before installation.

⚠ CAUTION

The upper sections MUST be rigged and lifted one at a time or injury or unit damage may occur.

Rigging and lifting upper sections:

1. Use all lifting brackets provided on the baserail section.
2. Lift and carefully set the section on top of the lower sections using guide pins to align and avoid damage to gasket.

   For sizes 21-30, upper sections should be stacked onto the lower sections starting with the section upstream and downstream of the wheel section, and then moving outward to each end of the unit.

   Repeat this process for the remaining ERV sections.

For sizes 36-61:

1. Connect lower ERV return air module sections to the main unit. Make standard connections with hardware at base rails, Intelliclamp connectors, and top frame brackets. See Fig. 171.
2. Remove screws securing the lower panel to the frame rail on the outlet wall supply air module. Save screws and panel for reinstallation. See. Fig. 172.
3. Verify gasket is present and secure at base rail tab to roof cap connection.

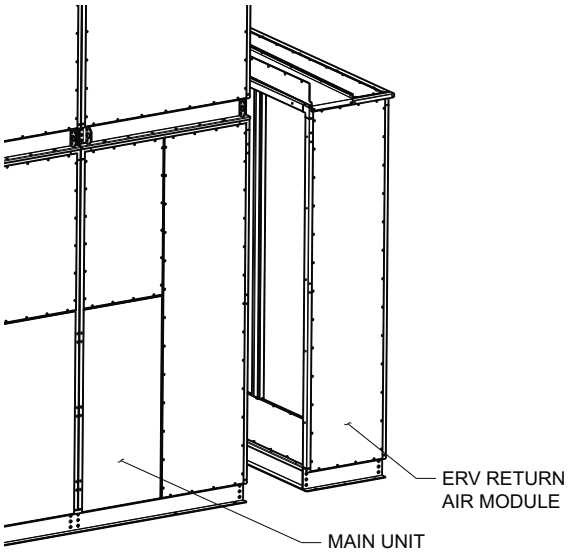

Fig. 171 — Connect Lower ERV Return Air Module Section

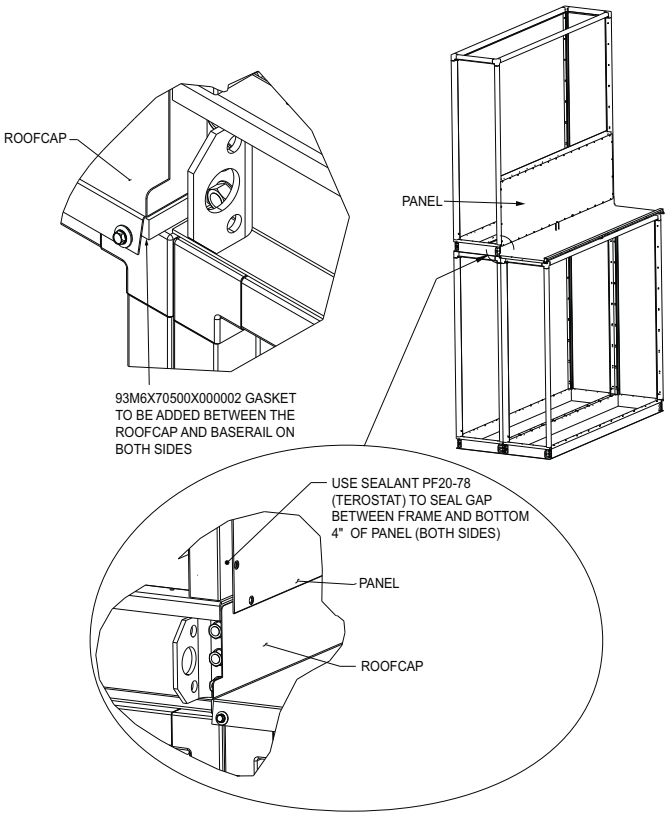

Fig. 172 — Remove Lower Panel

4. Stack upper section for the supply air module on the return air module making sure to align the stacked vertical frames. Connect stacked base rail to frame as shown in Fig. 170.
5. Reinstall panel removed in Step 2 using the retained screws over the roof cap flange.
6. Use caulk/sealant to seal gap at both sides starting at the bottom of the panel and sealing 4 in. up.
7. Install the lower ERV wheel bypass section. Make standard connections with hardware at baserail and Intelliclamp connectors (if used).
8. Stack the ERV wheel section and secure baserail to lower section as shown in Fig. 170. Take care to vertically align the faces of the stacked vertical frames.
9. Secure the ERV wheel section 3 in. baserail to the return air module frame Intelliclamp connector as shown in Fig. 173.
10. Secure the ERV wheel section frame Intelliclamp connector to the supply air module 6 in. base rail as shown in Fig. 174.
11. Stack the upper ERV wheel bypass section and secure baserail to the lower section as shown in Fig. 170. Take care to vertically align the faces of the stacked vertical frames.
12. Secure the upper ERV wheel bypass section 3 in. base rail to the return air module frame Intelliclamp connector as shown in Fig. 173.
13. Install lower level sections for the exhaust air module. Make standard connections with hardware at baserail and Intelliclamp connectors (if used).
14. Secure the ERV wheel section 3 in. baserail to the exhaust air module frame Intelliclamp connector as shown in Fig. 173.
15. Secure the ERV wheel section frame Intelliclamp connector to the exhaust air module 6 in. baserail as shown in Fig. 174.

16. Stack the upper level sections for the outside air module on the lower level exhaust air sections and secure baserail to the lower section per Fig. 170.
17. Secure the ERV wheel section 3 in. baserail to the outside air module frame Intelliclamp connector as shown in Fig. 173.
18. Secure the ERV wheel section frame Intelliclamp connector to the outside air module 6 in. baserail as shown in Fig. 174.
19. Make all remaining standard connections with hardware at Intelliclamp connectors and top frame bracket.
20. Make all standard connections between roofcaps at splits of upper level.
21. Make all standard connections to install slider on all connected roofcaps.
22. Make all standard connections to install gasket and secure bracket with screws at both ends of each roofcap connection.

CAULK/SEALANT APPLICATION

Apply caulk/sealant over the seam of every frame to frame connection at unit splits as shown in Fig. 175 and 176.

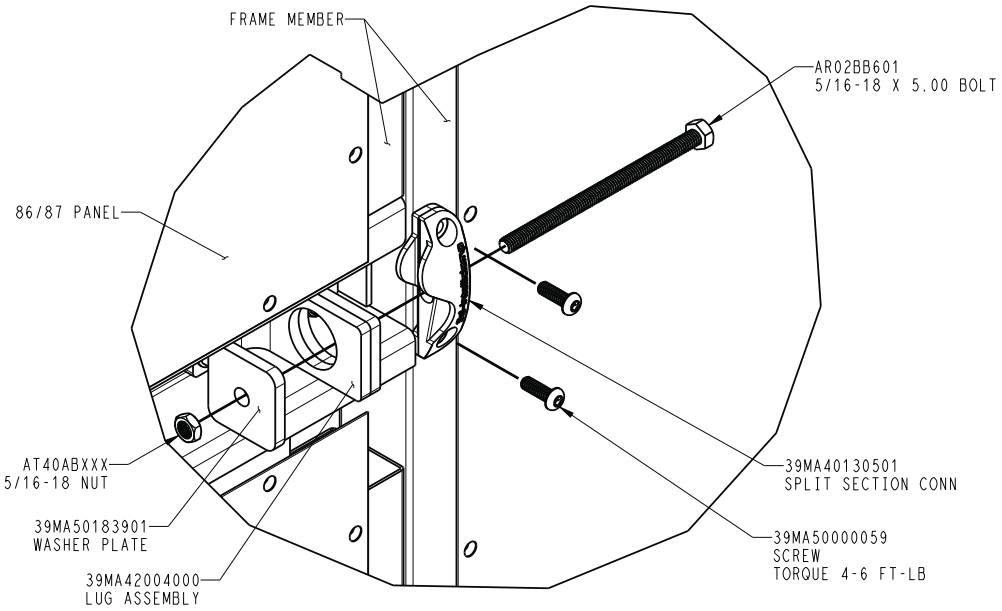

Fig. 173 — Secure ERV Wheel on 3 in. Baserail

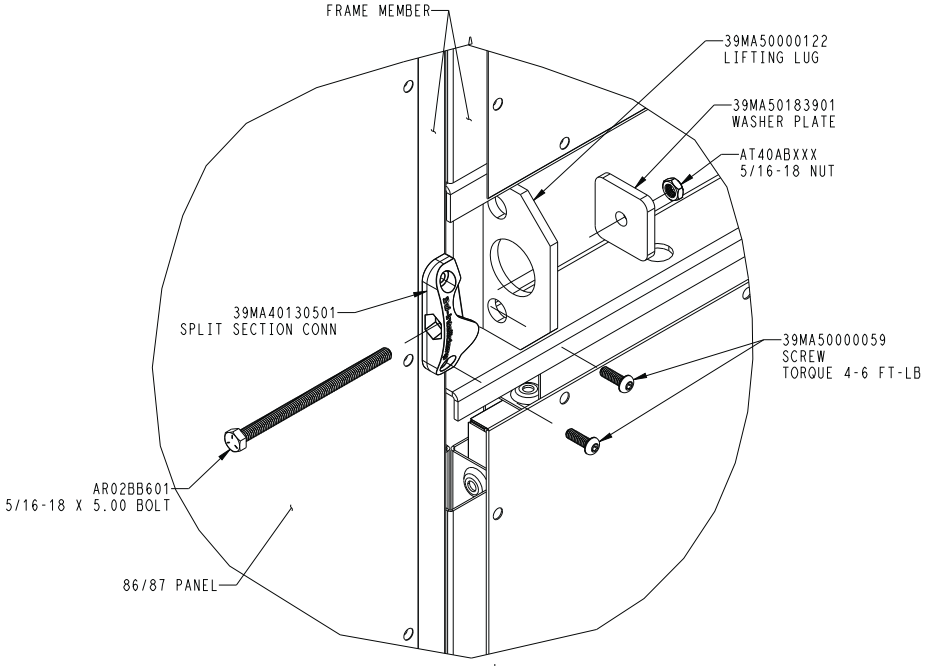

Fig. 174 — Secure ERV Wheel on 6 in. Baserail

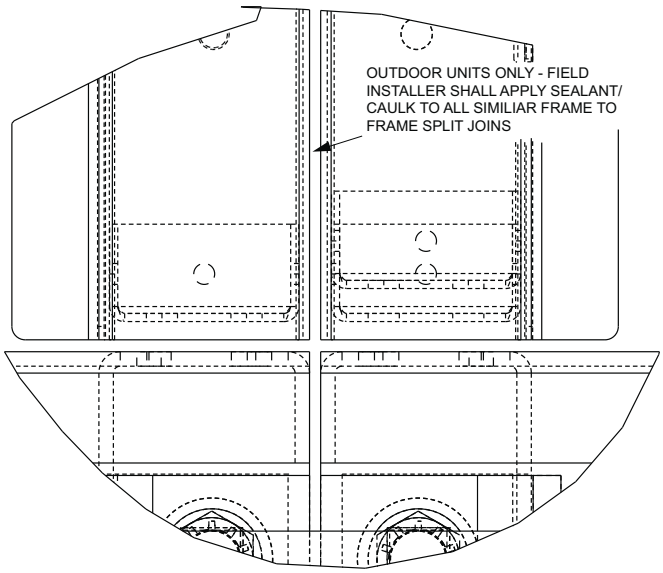

Fig. 175 — Frame to Frame Connections

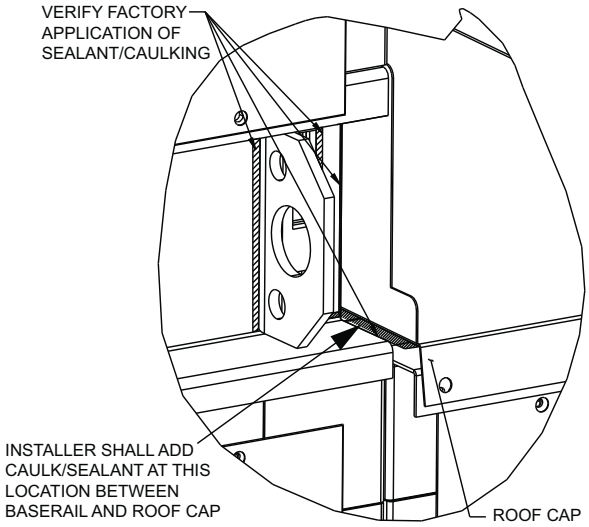

Fig. 176 — Apply Sealant/Caulk to Joints

ERV WHEEL MOTOR WIRING

All ERV (single-phase and 3-phase) units will have a contactor factory supplied and mounted near the ERV wheel motor. The motor power wiring will be factory wired to the contactor. For dual wheel applications, each motor will be wired to a contactor. Wiring between the contactors will also be factory supplied and installed. Field power wiring will connect to a single contactor for single wheel application or to labeled contactor-1 in dual wheel applications per wiring schematic located on ERV wheel section.

Refer to Table 48 for motor electrical data.

Table 48 — Electrical Data for ERV Wheel Motor

ERV WHEEL SIZE	MOTOR NAMEPLATE					
	VOLTAGE	PHASE	HZ	HP	AMPS	RPM
25, 30	115	1	50/60	N/A	0.70	1050
	208-230	1	50/60	N/A	0.30	1050
36	115	1	50/60	1/20	0.76	825
	200 / 208-230	1	50/60	1/20	0.60	825
	200-230 / 460	3	60	1/6	0.7-0.88 / 0.44	1140
	200 / 400	3	50	1/6	0.70 / 0.44	950
	575	3	60	1/6	0.46	1140
	380	3	50	1/6	0.50	950
41, 46, 52	115	1	50/60	1/6	1.90	1075
	200 / 208-230	1	50/60	1/6	1.20	1075
	200-230 / 460	3	60	1/6	0.7-0.88 / 0.44	1140
	200 / 400	3	50	1/6	0.70 / 0.44	950
	575	3	60	1/6	0.46	1140
	380	3	50	1/6	0.50	950
58, 64, 68	100 / 115	1	50/60	1/4	5.0 / 4.3	720/850
	200-230 / 460	3	60	1/4	2.3-2.6 / 1.3	850
	200 / 400	3	50	1/4	1.90 / 1.10	710
	575	3	60	1/4	0.88	850
	380-400	3	50	1/4	1.10 / 1.10	710
	200-220 / 200-230	1	50/60	1/4	2.6-2.6 / 2.4-2.1	720/850
74, 81	100 / 115	1	50/60	1/3	7.6 / 6.4	720/850
	200-230 / 460	3	60	1/3	2.5-2.6 / 1.3	850
	200 / 400	3	50	1/3	2.00 / 1.10	710
	575	3	60	1/3	0.90	850
	380-400	3	50	1/3	1.2 / 1.10	710
	200-220 / 200-230	1	50/60	1/3	3.8-4.1 / 3.4-3.2	720/850
86, 92	200-230 / 460	3	60	1/2	4.0-3.6 / 1.8	802
	200 / 400	3	50	1/2	2.65 / 1.35	710
	575	3	60	1/2	1.40	801
	380	3	50	1/2	1.35	710
99, 104	200-230 / 460	3	60	1	5.0-5.3 / 2.65	850
	200 / 400	3	50	1	5.20 / 2.70	710
	575	3	60	1	2.50	850
	380	3	50	1	2.70	710

Marine Lights and Convenience Outlets

Marine lights can be factory-installed with or without a GFCI (ground fault circuit interrupter) convenience outlet. See Fig. 177 and 178 for a typical marine light with a convenience outlet and Fig. 179 and 180 for a typical marine light without a convenience outlet. To connect power to the light, route the supply voltage to either the base of the light (interior) or to the switch/convenience outlet assembly (exterior).

The factory installs a low-wattage LED bulb. However, if an incandescent bulb is installed the existing wiring can handle the increased amp draw.

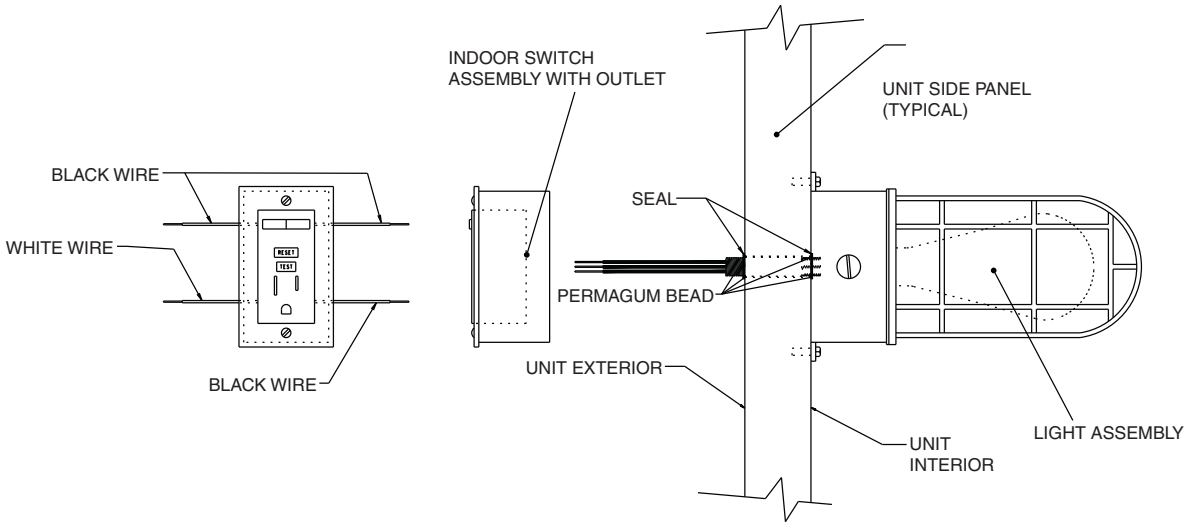

Fig. 177 — Marine Light with Convenience Outlet and Switch, Indoor Installation

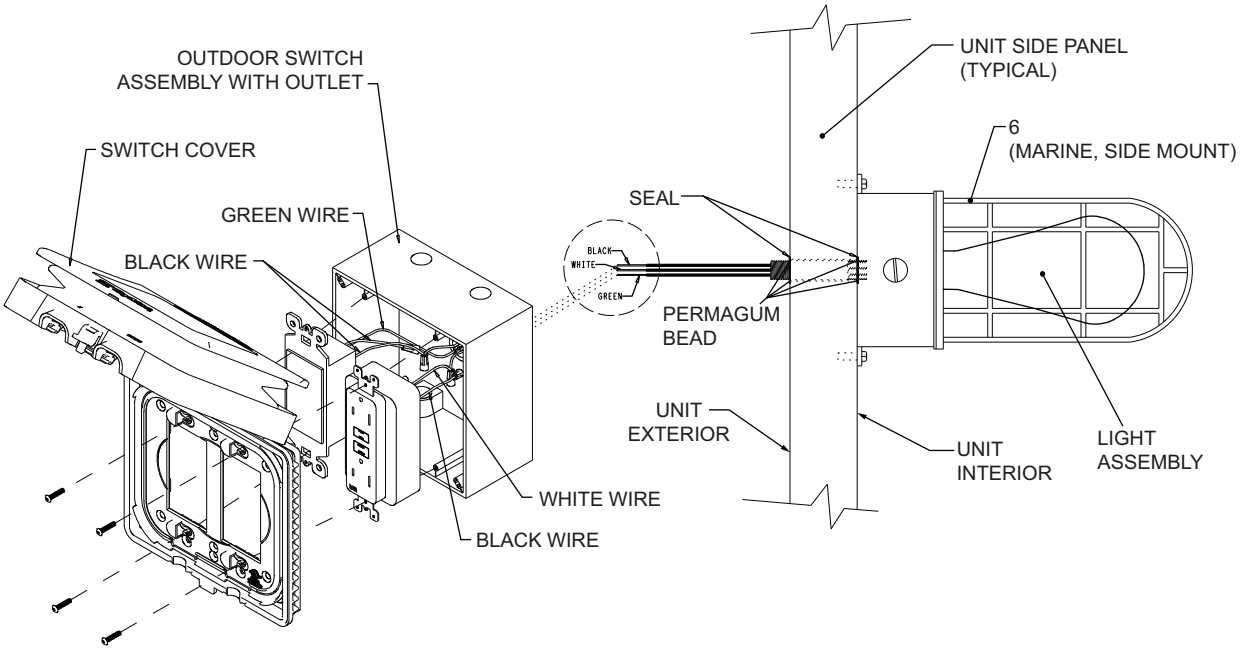

Fig. 178 — Marine Light with Convenience Outlet and Switch, Outdoor Installation

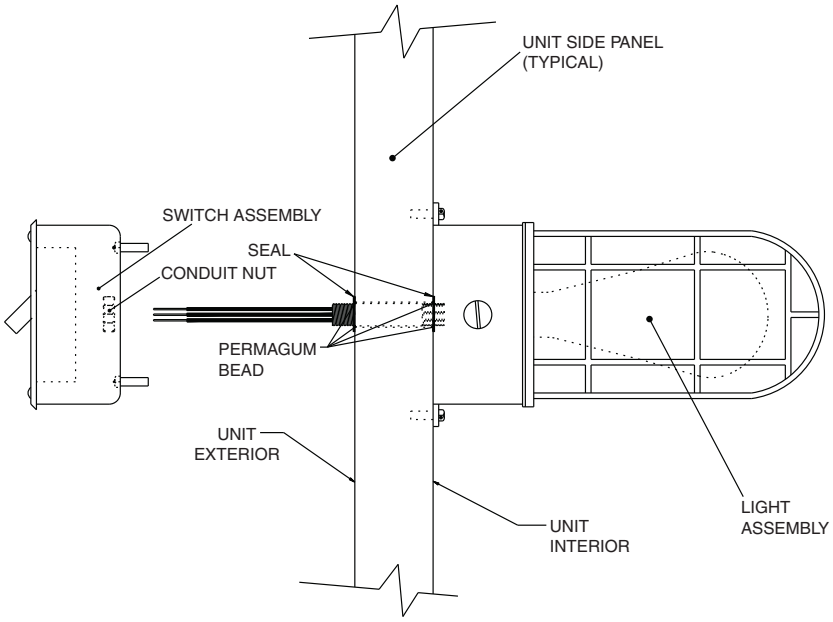

Fig. 179 — Marine Light with Switch (No Convenience Outlet), Indoor Installation

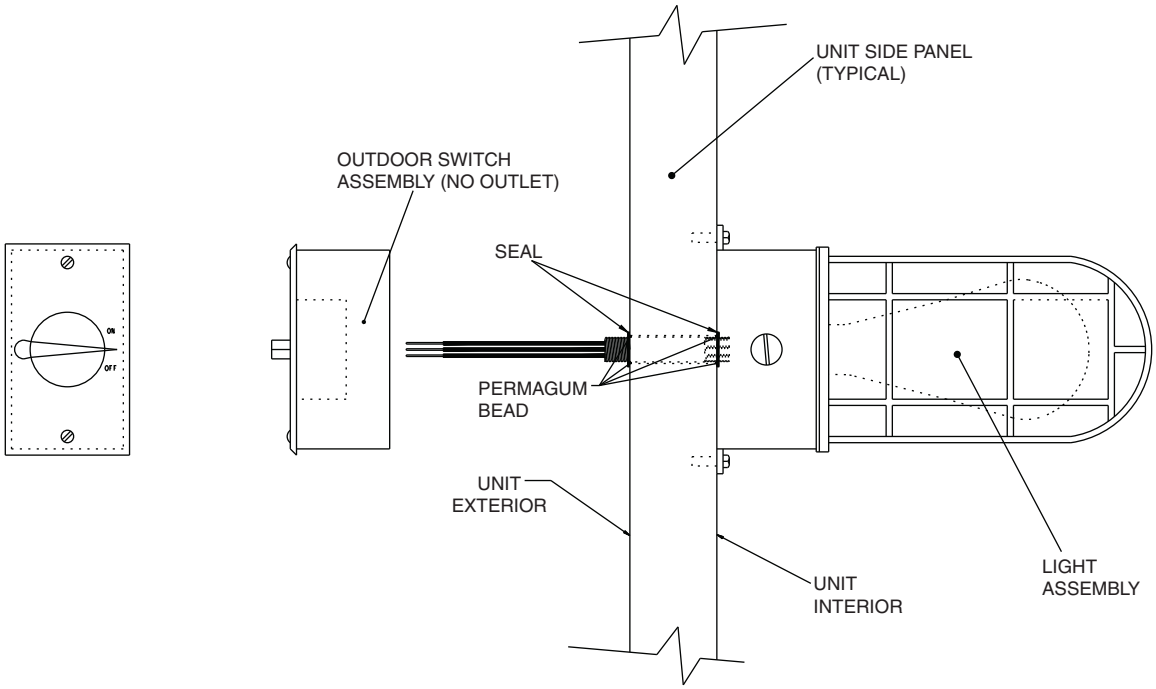

Fig. 180 — Marine Light with Switch (No Convenience Outlet), Outdoor Installation

START-UP

Checklist

Remove all construction debris from unit interior. Verify that all drains are free of debris. Prime all condensate traps.

SINGLE POINT POWER OPTION

1. Follow all LOCKOUT-TAGOUT procedures.
2. Verify incoming power supply meets all electrical requirements as shown on the Single Point Power Label found inside the Single Point Power enclosure. (See Fig. 181.)
3. Verify incoming power supply enters the enclosure at a designated ACCEPTABLE POWER ENTRANCE LOCATION. (See Fig. 182.)

```
SINGLE POINT POWER
THIS UNIT IS USED AS A SINGLE POINT POWER
MAIN DISCONNECT SWITCH 100 AMPS
@ 208/3/60 (VOLTS/PHASE/HZ)
MIN. CIRCUIT AMPACITY (AMPS): 48
MAX. FUSE SIZE (AMPS): 70
MAX. CIRCUIT BREAKER SIZE (AMPS): 70
MAX. POWER WIRE (AWG): 3/0
MAX. POWER TERMINAL TORQUE (IN-LBS): 89
LARGEST SINGLE LOAD (AMPS): 26
TOTAL FLA (AMPS): 38
SHORT-CIRCUIT CURRENT RATING (kA): 5
TYPE 4 NEMA ENCLOSURE
ALL CONDUIT CONNECTIONS MUST MEET OR
EXCEED ENCLOSURE/APPLICATION RATING.
ALL FIELD WIRING MUST BE COPPER CONDUCTORS
RATED 75 DEG. C MINIMUM
93SBXBXXXXXBRXXXXA                CARRIER 12/2019
```

Fig. 181 — Connection of Power to Single Point Power Enclosure

Fig. 182 — Acceptable Power Entrance Location

4. Verify incoming power supply wiring is correctly connected per wiring schematic found inside the Single Point Power enclosure.

FILTERS

Install unit filters in all filter sections.

AIRFOIL AND FORWARD-CURVED FANS

1. Release the holddown that fastens the fan sled to the section base.
2. Check lubrication of fan, motor bearings, and linkages. Note that bearings are shipped completely full of grease for corrosion protection and may run warm temporarily on start-up until excess grease has discharged.
3. Check tightness of bearing setscrews (Fig. 183) or locking collars (Fig. 184). Also, check tightness of setscrews on fan wheels and sheaves.
4. Check tightness of fan-shaft bearing mounting. See Fig. 184.
5. Recheck sheave alignment and belt tension. (Refer to Fig. 55 and 56.)
6. Hand turn fan to make certain fan wheel does not rub in housing.
7. Check fan speed with a strobe-type tachometer or use the following formula:

   Obtain motor rpm from the fan motor nameplate and read sheave pitch diameters marked on fan and motor pulleys, or approximate the pitch diameters by using the pulley ODs.

   Then:

$$\text{Fan RPM} = \frac{\text{Motor Rpm x Motor Sheave Pitch Diameter (in.)}}{\text{Fan Sheave Pitch Diameter (in.)}}$$

EXAMPLE:		ACTUAL	APPROXIMATE
NAMEPLATE MOTOR RPM	=	1760	1760
MOTOR SHEAVE PITCH DIAMETER	=	8.9	9.0 (OD)
FAN SHEAVE PITCH DIAMETER	=	12.4	12.5 (OD)
FAN RPM	=	1760 x 8.9	1760 x 9.0
	=	12.4	12.5
	=	1263 RPM	= 1267 RPM

   Refer to Table 5 for maximum allowable fan speeds for fan wheels. Excessive fan speed may result in condensate carryover from cooling coil or fan motor overload and wheel failure.

8. Check direction of rotation (see Table 33). Arrow on drive side of fan housing indicates correct direction of rotation.

> IMPORTANT: Drive ratios of 1:1 may cause excessive vibration. Avoid if possible.

9. Check vibration. If excessive vibration occurs, check for the following:
   a. Variable sheave (if air balance of system has been accomplished; replace sheave with fixed sheave for continuous application).
   b. Drive misalignment.
   c. Mismatched, worn, or loose belts.
   d. Wheel or sheaves loose on shaft.
   e. Loose bearings.
   f. Loose mounting bolts.
   g. Motor out of balance.
   h. Sheaves eccentric or out of balance.
   i. Vibration isolators improperly adjusted.
   j. Out-of-balance or corroded wheel (rebalance or replace if necessary).
   k. Accumulation of material on wheel (remove excess material).

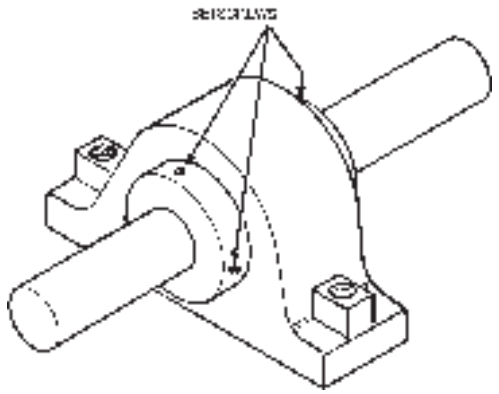

DRIVE PULLEY

NOMINAL SCREW SIZE	TORQUE (in.-lb)
NO. 6	9
NO. 8	16
NO. 10	30
1/4	70
5/16	140
3/8	216

Fig. 183 — Fan, Shaft and Bearing Details — Roller — Extended Race, One or Both Sides

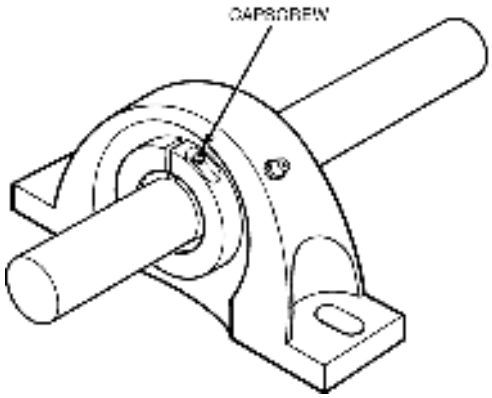

TORQUE TABLE

CAPSCREW AND SETSCREW SIZE (NO./in.)	HEX HEAD ACROSS FLATS (in.)	SQUARE HD ACROSS FLATS (in.)	TORQUE
10	3/32	—	25 in.-lb
1/4	1/8	—	60 in.-lb
5/16	5/32	—	10 ft-lb
3/8	3/16	—	17 ft-lb
7/16	7/32	—	25 ft-lb
1/2	1/4	1/2	40 ft-lb
5/8	5/16	—	90 ft-lb
3/4	3/8	—	125 ft-lb

BEARING HOLDDOWN BOLT TORQUE

BOLT SIZE (in.)	TORQUE (ft-lb)
3/8 - 16	30
1/2 - 13	63
5/8 - 11	100
3/4 - 10	165

Fig. 184 — Fan, Shaft and Bearing Details — Squeeze-Type Locking Collar

DIRECT DRIVE PLENUM FANS WITH NEMA MOTORS

Start-up procedures are similar to those for fans described above with the following additions:

1. Check tightness of bolts securing fan motor to base.
2. Check tightness of fan wheel bushing bolts (see Fig. 185) per Table 49 below.

Table 49 — Bushing Bolt Torque

BUSHING TYPE	TORQUE (in.-lb)
JA	72
SD	108
SK	180
SF	360

3. Visually verify the radial clearance between the fan wheel and the inlet cone is equal in all directions.
4. Verify the fan wheel to inlet cone overlap (see Fig. 185) is within limits per Table 50 below.
5. Turn the fan wheel by hand to ensure no contact with inlet cone.
6. If provided with piezometer ring, verify all tubing connections are secure.

Table 50 — Inlet Cone Overlap

WHEEL SIZE	WHEEL - CONE OVERLAP (in.)
105	0.12 - 0.29
122	0.12 - 0.32
135	0.12 - 0.34
150	0.19 - 0.41
165	0.25 - 0.47
182	0.31 - 0.50
200	0.38 - 0.57
222	0.44 - 0.63
245	0.50 - 0.69
270	0.56 - 0.76
300	0.62 - 0.88
330	0.75 - 0.96
365	0.81 - 1.13
402	0.88 - 1.26

7. Ensure VFD has been programmed with the correct maximum fan speed and maximum output frequency to limit motor speed (rpm) to fan maximum speed (rpm).
   a. See label on fan sled for maximum fan speed (rpm).
   b. Check VFD for maximum fan speed (parameter 2002) to ensure that the fan maximum speed is the VFD maximum speed.
   c. Using the Parameters Mode (page 159) on the VFD, verify that parameter 2002 has been changed to the value shown on the fan label. If it does not match, DO NOT start the unit. Press Edit (Soft Key 2) to enter correct value for parameter 2002. Press Exit (Soft Key 1).
   d. See motor nameplate for operating frequency (Hz) and speed (rpm).

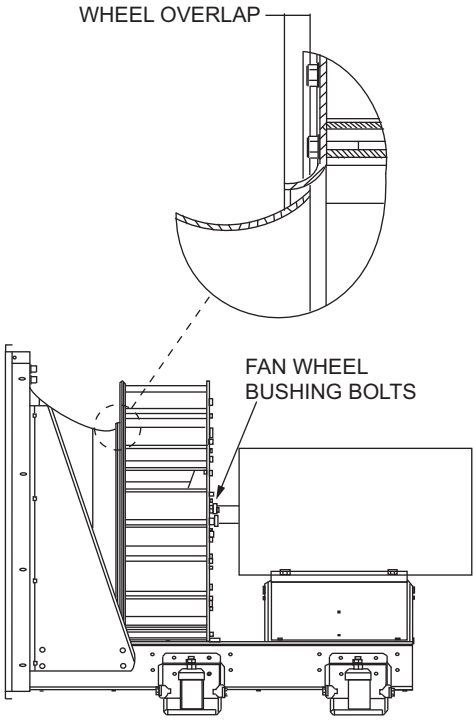

Fig. 185 — Fan Wheel Bushing Location

e. VFD maximum frequency setpoint (parameter 2008) = motor frequency (Hz) * fan max speed (rpm) / motor nominal operating speed (rpm). Example:

   Motor Frequency = 60 Hz

   Fan Max Speed = 2979 RPM

   Motor Nominal Operating Speed = 1760 RPM

   Max Frequency Setpoint = 60 Hz * 2979 RPM / 1760 RPM = 101 Hz

f. Using the Parameters Mode (page 159) on the VFD, verify that parameter 2008 has been changed to the calculated value. If it does not match, DO NOT start the unit. Press Edit (Soft Key 2) to enter correct value for parameter 2008. Press Exit (Soft Key 1).

TWO, FOUR, OR SIX-FAN ARRAY DIRECT DRIVE PLENUM FANS WITH NEMA MOTORS

Start-up procedures for 2, 4 or 6-fan arrays are similar to those for single direct-drive fans as described in the previous sections, with the following additions:

1. Start-up procedures must be completed for all fans.
2. If VFD(s) is mounted on fan bulkhead panel at a shipping split, then the VFD remote keypad assembly is shipped inside the fan section. See Fig. 186.
   a. Install bracket with keypad by removing an existing screw from the cover on the vertical frame on the mating section, taking care to avoid all door latch areas.
   b. Position bracket so VFD remote keypad is upright and attach bracket by re-installing the removed screw.
   c. Plug VFD extension cable into the remote keypad and the VFD.
   d. Coil excess cable, secure with wire tie, and route cable away from fan inlet. Secure with wire ties and screws.
3. If each motor is controlled by a single VFD, then start-up procedures must be performed for each VFD.

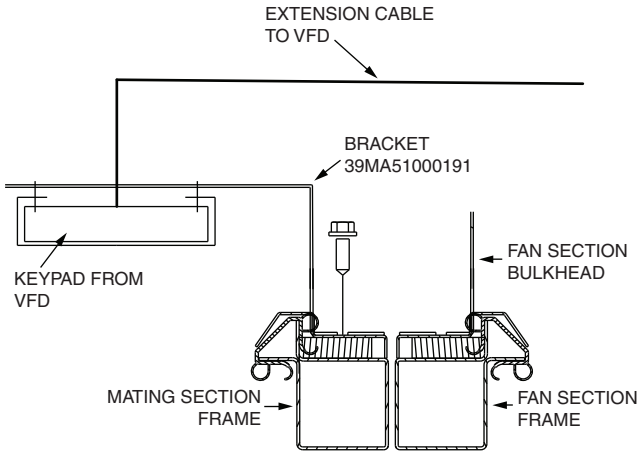

Fig. 186 — Remote Keypad Assembly Location

4. If two or more motors are controlled by a single VFD, then verify that both overloads in the Motor Circuit Protection box are set to the motors' FLA.
5. Back-draft dampers, if ordered, have been factory installed. The back draft damper will automatically close if the fan becomes disabled, thus preventing air from recirculating through the disabled fan. Previous fan array units may have shipped with a fan block-off plate to prevent air recirculating through the disabled fan. The block-off plate is field installed when a fan unit is disabled, allowing the other fan(s) to run. The block-off plate would have shipped in the fan section. It should have been removed and stored in a safe place for future use.

Direct Drive Plenum Fans with EC Motors

START-UP

⚠ WARNING

There are live terminals and connections even with device switched off. Wait five minutes after disconnecting the voltage at all poles before opening any motor's terminal cover to prevent risk of shock.

⚠ WARNING

In the event of a fault, the rotor and the impeller will be energized. To avoid possible injury of death do not touch the rotor or impeller after installation.

⚠ WARNING

To avoid electrical shock or personal injury follow proper lockout tagout procedures. If control voltage or a stored speed set value is applied, the motor will restart automatically (for instance, after a power failure).

⚠ WARNING

Temperatures above 185°F can occur on the motor surfaces, especially the controller housing. Avoid touching motor surfaces to prevent burn injuries.

1. Review and follow all warnings and caution notes concerning EC motors.
2. Verify main power is locked-out - tagged out.
3. Determine method of fan motor control: If fan motor control signal is 0-10 VDC or 4-20 mA, go to Start-Up, Step 5. Else, continue.
4. Fan motor control is MODBUS or BACnet; go to Start-Up, Step 6.

0-10 VDC OR 4-20 MA FAN MOTOR CONTROL

1. Connect fan motor control wiring to the following control terminals in the ECMFPB:
   a. Connect control ground wire to control terminal #2 which is connected to motor control ground terminal.
   b. Connect 0-10 VDC or 4-20 mA control wire to control terminal #1 which is connected to motor control Ain1U terminal.

   If fan motor control is 4-20 mA, the plastic bag taped over control terminals inside the ECMFPB contains a 500 Ohm resistor that MUST be field installed as a jumper between control terminals #1 and #2 as shown on the label in the bag.

CAUTION

Failure to install 500 Ohm resistor when using 4-20 mA control will result in damage to the EC Motor control board.

2. Verify that the unit and surrounding area has been cleaned of all foreign objects, dirt, and debris.
3. Turn main power to the ECM Fan Power Box ON.
4. Turn ECM Fan Power Box switch to ON.
5. Provide appropriate fan control input signal (3 VDC / 8 mA) to start the fans at slow speed.
6. Verify the following:
   a. All fans are rotating.
   b. Direction of rotation for all fans matches the rotation arrow on the fan mounting plate.
   c. All fans operate quietly (obviously, noise is produced but noise should be broad frequency and without any unusual noise. Examples of unusual noises are: specific tonal noise, screeching, rubbing, grinding, rattling, or whistling).
   d. All fans operate without noticeable vibration.
   e. If fans include the backdraft damper option, verify that all damper blades open.
   f. Change fan control signal to 0 VDC / 4 mA and verify all fans stop.

MODBUS OR BACNET FAN MOTOR CONTROL

1. The factory programmed the fan motors with the fan supplier's software and an RS485 - USB interface converter.
2. Suitable interface converters are:
   a. ebm-papst: EC-Control®[1] supports the following RS485 interface types: RS232, Ethernet, Bluetooth and USB, one of which must be field supplied and installed.
   b. Ziehl-Abegg ZAset™[1] supports the following RS485 interface types: USB, MODBUS TCP/IP, MODBUS RTU over TCP/IP, one of which must be field supplied and installed.
3. If an interface other than USB is required, a fan motor programming change must be performed. See fan supplier's operating manual for instructions.
   a. ebm-papst: EC-Control 3.20 manual, Section 3.2.
   b. Ziehl-Abegg: ZAset manual, Section 5.
4. Connect fan motor control wiring to the following control terminals in the ECM Fan Power Box:
   a. Connect wire X from RS485 to control terminal #2 which is connected to motor control ground terminal.
   b. Connect wire A from RS485 to control terminal #3 which is connected to motor control RSA terminal.
   c. Connect wire B from RS485 to control terminal #4 which is connected to motor control RSB terminal.
5. All fan motors have been assigned MODBUS addresses per the fan numbering label on the inside of the door panel on the ECMFPB.
6. If fan control is BACnet, then the BACnet module is provided in the lower right corner inside the ECMFPB and must be field installed and wired.
   a. Suggested mounting position is on the DIN rail above the control terminals.
   b. 24 VDC power must be provided to the module.
   c. Ground connection must be provided to the module.
   d. Make other connections for your specified control system as directed in operating instructions included with the BACnet module.
7. Verify that the unit and surrounding area has been cleaned of all foreign objects, dirt, and debris.
8. Turn main power to the ECM Fan Power Box ON.
9. Turn ECM Fan Power Box switch to ON.
10. Use fan supplier software or other MODBUS / BACnet control to increase fan control input signal to start the fans at slow speed.
11. Verify the following:
    a. All fans are rotating.
    b. Direction of rotation for all fans matches the rotation arrow on the fan mounting plate.
    c. All fans operate quietly (obviously, noise is produced but noise should be broad frequency and without any unusual noise. Examples of unusual noises are: specific tonal noise, screeching, rubbing, grinding, rattling, or whistling).
    d. All fans operate without noticeable vibration.
12. Use fan supplier software or other MODBUS / BACnet control to decrease fan control input signal to stop the fans and verify all fans stop.

HUMIDIFIER INSTALLATION CHECKLIST

1. Humidifier is properly assembled with all discharge slots facing the proper direction. (Multipipe systems have the vertical slots in line with the manifolds, 90 degrees to the airflow.)
2. Humidifier headers are secured and level.
3. Humidifier upright discharge manifolds are plumb.
4. Valve and trap assembly is properly assembled and connected to the humidifier header.
5. P-trap is installed on discharge of each header.
6. Steam feed line is properly run, sloped and connected to the valve and trap assembly inlet.
7. Controls are properly wired.

1. Third-party trademarks and logos are the property of their respective owners.

HUMIDIFIER START-UP

1. Slowly open the steam isolation valve from the steam supply line. You should be able to hear steam running through the valve. Wait a few minutes for the steam to heat up the entire line to the humidifier and for all condensate to clear through the trap.
2. Verify that the steam trap on the valve/trap assembly of the humidifier is working properly — condensate discharge line should be hot.
3. With air flowing in the duct or air handler, create a humidification demand by increasing the humidity control set point until it exceeds the actual humidity reading.
4. The valve on the humidifier should begin to open and steam should enter the humidifier manifolds.
5. Initially most of the steam will condense as it heats the manifolds. Ensure that the P-traps on the manifolds are clear and running to drain without leaking steam.

   NOTE: On first start-up, some steam may leak from the P-traps on the manifolds if they have not been primed (filled with water).
6. Steam should begin exiting the humidifier manifolds.
7. Return the humidity control set point to the desired level.

COILS

Water Coil

Typical coil vents, drains, and lifting points are shown in Fig. 97. Open the vent plug, partially turn on the water supply until air is exhausted, and replace the vent plug. Fully turn on the water supply.

Direct Expansion Coil

Charge with refrigerant. Refer to Condensing Unit instructions. Refrigerant operating charge is shown in Table 17 on page 64.

Steam Coil

1. Generate steam in the steam main and open the supply (gate) valve to the coil.
2. Thoroughly preheat the coil with steam before starting fans, especially when inlet air temperature is below freezing. If water hammer occurs, turn off fans until condensate trapped in coils is reduced by heat and steam pressure.
3. Ensure continuous-vent petcock is open; also check operation of gate valves, control valve, and check valves.
4. After operating coil for 50 hours, check strainer and remove any foreign matter. Check traps and drip lines for correct condensate removal. Where necessary, increase the pitch of lines to increase condensate drainage. (Recheck operation after 50 hours and repeat if necessary.)

INTEGRAL FACE AND BYPASS COIL START-UP

Ensure that the damper operator allows the dampers to fully close the face and reverses to fully close the bypass. Set the thermostat so that the face opens and bypass closes when heat is required.

On start-up, the steam or hot water supply will be fully expanded prior to start of airflow. Allow time for all air to be purged from the system and for the heating surface to fully warm up in order to avoid heating lag.

Preheating a cold system will avoid excessive steam condensate loading at the start of operation of a steam heating system. It also protects steam and hot water units against freezing up when subject to sub-freezing air temperatures. After preheating, fully open the dampers for full-face exposure (bypass closed). Start airflow. Set thermostat for desired air temperature.

ELECTRIC HEATERS

1. Check tightness of all electrical connections.
2. Remove heater circuit fuses.
3. Turn on power to activate transformer.
4. Start up base unit fans. Check airflow and switches. Refer to base unit instructions as required.
5. Set thermostats so that heater contactors will operate.
6. Shut off unit power.
7. Reinstall fuses.
8. Turn on unit power and heater power.

GAS-FIRED FURNACES (DUCT AND RACK SYSTEM)

Refer to the wiring diagram and sequence of operation documents included in the furnace section of the unit, or contact your Carrier service representative for assistance with this information, before attempting to place the single unit heater or rack system into service.

⚠ WARNING

The use and storage of gasoline or other flammable vapors and liquids in open containers in the vicinity of this appliance is hazardous and may result in fire or explosion.

Also, note the following points:

- The duct furnace(s) or rack system furnaces do not have a pilot. They are equipped with a direct spark ignition device that automatically lights the gas burner. *Do not* try to light burners by hand.
- Before operating, leak test all gas piping up to heater gas valve. See the section Gas Supply, Piping, and Connections on page 200 (duct furnaces) or page 205 (rack system furnaces). Smell around the unit area for gas. *Do not* attempt to place heater in operation until source of gas leak is identified and corrected.
- Do not attempt to operate unit if there is any indication that any part or control has been underwater. Any control or component that has been under water must be replaced prior to attempting to start the unit.
- Use only hand force to push and turn the gas control knob to the “ON” position. Never use tools. If knob does not operate by hand, replace the gas valve before starting the unit.

⚠ WARNING

If the gas control knob does not operate by hand, replace it before starting the unit. Forcing or attempting to repair the gas valve may result in fire or explosion.

Start-Up (Duct Furnace)

Follow these steps to start the gas-fired duct furnace:

1. Turn thermostat or temperature controller to its lowest setting.
2. Turn off gas supply at the manual shut-off valve.
3. Turn off power to the unit at the disconnect switch.
4. Remove access panel or open door to unit vestibule housing the gas heater.
5. Move gas control knob to “OFF” position.
6. Install a tapped fitting for attachment to a manometer, or other gauge suitable for 14.0 in. wg in the inlet pressure tap, and for 10.0 in. wg in the manifold pressure tap.
7. Wait 5 minutes for any gas to clear out. If you smell gas, see Step 2 and correct leak. If there is no odor or leaks have been corrected, go to the next step.
8. Turn gas control knob to “ON” position.
9. Open all manual gas valves.
10. Turn power on at disconnect switch.
11. Set thermostat or controller to its highest position to initiate call for heat and maintain operation of unit.

The draft inducer will run for a 15 to 30-second pre-purge period. At the end of the pre-purge period, the direct spark will be energized and the gas valve will open. The burners ignite.

Failure to Ignite (Duct Furnace)

On the initial start-up, or after the unit has been off for long periods of time, the first ignition trial may be unsuccessful due to the need to purge air from the manifold at start-up. If ignition does not occur on the first trial, the gas and spark are shut off by the ignition control and the control enters an inter-purge period of 15 seconds, during which the draft inducer continues to run. At the end of the inter-purge period, another trial for ignition will be initiated.

Control will initiate up to three ignition trials on a call for heat before lockout of control occurs. Control can be brought out of lockout by turning thermostat or controller to its lowest position, waiting 5 seconds, and then turning back up to call for heat. Controls will automatically reset after one hour and initiate a call for heat.

Manifold Pressure Adjustment (Duct and Rack System Furnaces)

A pressure tap is provided in each furnace manifold for measuring the gas manifold pressure. Manifold pressure must be checked at start-up and during any service or maintenance. All control systems require a manifold pressure of 3.40 to 3.50 in. wg at maximum input rating on natural gas, and 10.0 in. wg on propane gas at maximum input rating. See Fig. 156-159 on page 202 for gas valve adjustment locations.

NOTE: For two-stage and modulating control applications, verify proper low fire adjustments as outlined in the Sequence of Operation document provided in the instruction package. Check the furnace section for this document or contact your Carrier service representative.

Burner Flames (Duct and Rack System Furnaces)

Before completing the start-up, check the appearance of the main burner flame.

1. The burner flame should be predominately blue in color, and well-defined and centered at the tube entry as shown in Fig. 187. Distorted flame or yellow tipping of natural gas flame, or a long yellow flame on propane, may be caused by lint and dirt accumulation inside burner or at burner ports, at air inlet between burner and manifold pipe, or debris in the main burner orifice. Soft brush or vacuum clean affected areas.
2. Poorly defined, unfocused, substantially yellow flames, or flames that appear weak or wavering, indicate poor air supply to burners or excessive burner input. Verify gas supply type and manifold pressure with rating plate.

Poor air supply can be caused by obstructions or blockage in heat exchanger tubes or vent discharge pipe. Inspect and clean as necessary to eliminate blockage. Vacuum any dirt or loose debris. Clean heat exchanger tubes with stiff brush.

Poor flame characteristics can also be caused by undersized combustion air openings or flue gas recirculation into combustion air supply. Increase air opening size or re-direct flue products to prevent re-circulation.

Reduced air delivery can also be the result of fan blade slippage, dirt accumulation on the fan blade, or low voltage to draft inducer motor. Inspect draft fan assembly and be sure fan blade is secure to motor shaft. Check line voltage to heater.

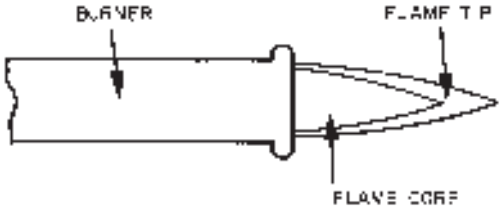

Fig. 187 — Proper Flame Appearance

Normal Operation (Duct and Rack System Furnaces)

1. Turn on electrical supply to unit at disconnect switch.
2. Turn on manual gas supply.
3. Set thermostat or temperature controller to desired temperature.

Information outlining the normal sequence of operation and wiring diagram for the control system supplied with the furnace model is located in the furnace section, or contact your Carrier service representative.

Shutdown (Duct and Rack System Furnaces)

1. Set thermostat or controller to lowest setting.
2. Turn off electrical supply to unit at disconnect switch.
3. Turn off manual gas supply.
4. Disconnect manifold and inlet pressure taps and re-install pipe plugs.
5. Replace vestibule access panel or close door.

Energy Recovery Wheel

⚠ CAUTION

Keep hands away from rotating wheel. Contact with rotating wheel can cause physical injury.

1. By hand, turn the wheel clockwise (as viewed from the pulley side), to verify that the wheel turns freely through a full 360-degree rotation.
2. Before applying power to the drive motor, confirm that the wheel segments are fully engaged in the wheel frame and that the segment retainers are completely fastened. (See Fig. 188.)
3. With hands and objects away from moving parts, activate the unit and confirm wheel rotation. The wheel rotates clockwise (as viewed from the pulley side).
4. If the wheel has difficulty starting, turn the power off and inspect for excessive interference between the wheel surface and each of the four (4) diameter seals. To correct, loosen the diameter seal adjusting screws and back adjustable diameter seals away from the surface of the wheel, apply power to confirm that the wheel is free to rotate, then re-adjust and tighten the hub and diameter seals according to the instructions in the Service section.
5. Start and stop the wheel several times to confirm seal adjustment and to confirm that the belt is tracking properly on the wheel rim (approximately 1/4 in. from outer edge of rim).

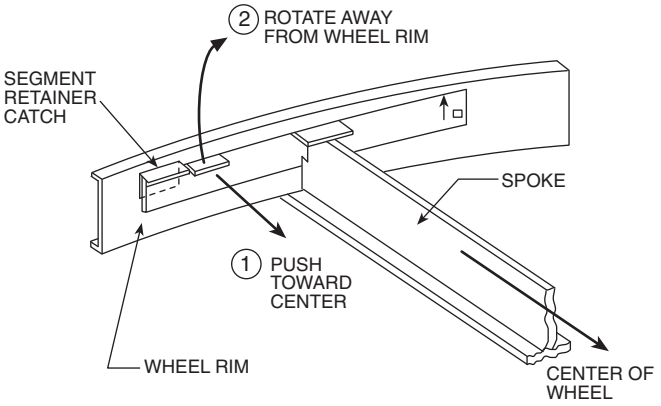

Fig. 188 — Segment Retainer

ZEROING THE MINIHELIC GAUGE BEFORE START UP

If the Minihelic[1] gauge needs to be removed or replaced, after installation, it may need to be zeroed before placing in operation. If re-zeroing is required, firmly hold the case of gauge with one hand and unscrew the front cover with the palm of the other hand in a counterclockwise direction. If difficult to loosen, place a small sheet of rubber between the cover and the palm of the hand. Zero-adjust screw is located behind the scale at the pair marked "zero." Use a hex/allen wrench and adjust until pointer is on zero. This must be done with both pressure connections vented to atmosphere and the gauge oriented in the final mounting position. Replace cover.

SERVICE

⚠ CAUTION

Electric shock hazard. Disconnect power before entering or servicing.

More than one disconnect switch may be required to de-energize the equipment.

General

1. Review Safety Considerations at beginning of these instructions. Good safety habits are important tools when performing service procedures.
2. To make speed measurements, use a strobe-style tachometer or calculate per Step 7 of Start-Up, Checklist for Airfoil and Forward-Curved Fans (page 215).

Single Point Power Enclosure

At least once a year at start of operating season or whenever unit is serviced, check field and factory made electrical connections for condition of wiring insulation and tightness of connections.

Electric Heaters

At least once a year at start of operating season or whenever unit is serviced, check field and factory-made electrical connections for tightness. Also periodically clean filters, fan, airways, ductwork, grilles, and registers as required. Differential air pressure switch is factory set to open at 0.07 in. wg, close at 0.05 in. wg and requires no adjustment.

Refer to the Troubleshooting section for more information. Heater electrical data is shown in Table 45.

Gas-Fired Furnaces (Duct and Rack System)

Follow these procedures for inspection and operation check.

INSPECTION

1. The duct furnace or furnace module should be inspected annually by a qualified service agency. The condition of the burners, heat exchanger, draft inducer, vent system, operating controls and wiring should be determined. Check for obvious signs of deterioration, accumulation of dirt and debris, and heat or water related damage. Any damaged or deteriorated parts should be replaced before the unit is put back into service.
2. Label all wires prior to disconnection when servicing unit, Wiring errors can cause improper or dangerous operation. Verify proper operation after servicing.
3. Inspect burners, heat exchanger, induced draft fan and vent ducts and clean as necessary.
4. Check the heat exchanger for cracks. If any are present, replace heat exchanger before putting unit back into service.
5. Check the attachment points of the duct furnace to the cabinet to verify that they are air-tight. For a rack system module, check the attachment points to the cabinet or ducts to verify that they are air-tight.
6. Check the automatic gas valve to ensure that the gas valve seat is not leaking.
7. Check wiring connections to be sure they are secure, and inspect wiring for any deterioration.

⚠ CAUTION

If any of the original wiring needs to be replaced, it must be replaced with wiring materials suitable for 221°F (105°C). Unsuitable wiring materials may cause equipment damage.

OPERATION CHECK

1. Turn on power to the unit and set thermostat or heat controller to call for heat, allowing duct furnace or heater assembly module to operate.
2. Check for proper start-up and ignition of the single unit or each furnace in the heater assembly module. See the section Gas-Fired Furnaces (Duct and Rack Systems) on page 219.
3. Check the appearance of the burner flame. See Fig. 187 on page 220.
4. For single units, be sure circulating air fan is operating and verify proper airflow through duct furnace.
5. Return thermostat or heat controller to normal setting.

Fans

FAN MOTOR REPLACEMENT ON DIRECT DRIVE FAN ASSEMBLIES WITH NEMA MOTORS

It is recommended to replace the entire motor and fan wheel assembly so that the assembly is factory balanced. It is possible to replace only motor or fan wheel, but the motor and fan wheel assembly MUST be balanced to ISO 1940 / balance grade G6.3 specifications prior to operation.

1. Loosen and remove motor hold down bolts from motor base.
2. Remove motor and fan assembly from the fan sled.
3. Mark the motor shaft to indicate the mounted location of the motor shaft bushing.
4. Loosen and remove motor shaft bushing bolts.
5. Remove fan from the shaft bushing.
6. Remove shaft bushing from motor shaft.
7. Install shaft bushing on new motor.
8. Mount rotor on shaft bushing and install mounting bolts but do not tighten.

1. Third-party trademarks and logos are the property of their respective owners.

9. Position bushing at marked location on the motor shaft.
10. Partially tighten each bolt and, following a rotational pattern, tighten all bolts until reaching final tightening torque on all bolts as shown in Table 48.
11. Place motor and fan wheel assembly in position on motor plate.
12. Insert motor hold down bolts but do not tighten.
13. Align fan wheel to fan inlet to dimensions shown in Table 26.
14. Tighten motor hold down bolts.
15. Balance fan wheel and motor assembly to meet ISO 1940 / balance grade G6.3.

DIRECT DRIVE FANS WITH EC MOTORS

Direct drive plenum fans with EC motors MUST be replaced as a complete assembly. No replacement parts are available.

1. Review and follow all warnings and caution notes concerning EC motors.
2. The L10 service life of the maintenance-free ball bearings can be taken as approx. 40,000 operating hours at an ambient temperature of 104°F. This estimate can vary according to the actual ambient conditions. If bearing replacement is necessary after that period, contact fan supplier.
3. Maintaining cleanliness of the fan assembly is important.
   a. Dirt deposits on the motor housing can cause overheating of the motor.
   b. Soiling of the impeller can cause vibration that will shorten the service life of the fan.
   c. Accumulation of dirt on the impeller can lead to severe vibration and can destroy the fan.
   d. Only clean when not in motion.
   e. The preferred method of cleaning is dry cleaning, e.g. using compressed air.
   f. Do NOT clean the device using a high-pressure cleaner.
   g. Do NOT use acid, alkali or solvent-based cleaning agents.
   h. If liquid was used for cleaning, then completely remove any cleaning agents used. Operate the fan for 2 hours at maximum speed so that any liquid that entered can evaporate.
4. If fan assembly replacement is required, the new fan has a default address of 1. If control type is MODBUS / BACnet; the address must be changed to match the number of the fan removed (see fan numbering label on the ECM Fan Power Box). See appropriate fan supplier's Operating Manual:
   a. ebm-papst: EC-Control 3.20 manual, Section 3.3.3.
   b. Ziehl-Abegg: ZAset manual, Section 5.

FAN MOTOR REPLACEMENT ON
BELT DRIVE FAN ASSEMBLIES

1. Shut off motor power.
2. Disconnect and tag power wires at motor terminals.
3. Loosen motor brace-to-mounting-rail attaching bolts. Loosen belt tensioning bolts to adjust the motor position so V-belts can be removed without stretching over grooves.
4. Mark belt as to position. Remove and set aside belts.
5. Remove motor to motor bracket holddown bolts.
6. Remove motor pulley and set aside.
7. Remove motor. It may be necessary to remove the end panel to remove larger motors for some unit sizes.
8. Install new motor. Reassemble by reversing Steps 3-7. Be sure to reinstall multiple belts in their original positions. Use a complete new set if required. Do not stretch belts over sheaves. Review the sections on motor and sheave installation, sheave alignment, and belt tensioning starting on page 115.
9. Reconnect motor leads, remove tags, and restore power. Check fan for proper rotation as described in Start-Up, Checklist.

Energy Recovery Ventilation

FAN SHAFT BEARING REMOVAL

1. Isolate the unit from the system by closing dampers to prevent “pin wheeling.” Tie off the fan wheel to prevent rotation.
2. Lock open and tag electrical disconnect.
3. Enter through fan section access door or remove panels as required.
4. Loosen motor base to frame bolts. Adjust motor to release belt tension and remove belts. *Do not stretch belts over sheaves*. Damage to belts can result.
5. Remove bolts on bushing of fan shaft sheave, insert bolts in jacking hole provided on bushing and slowly jack bushing from sheave. Remove bushing and sheave.
6. Loosen bearing holddown bolts, block shaft up.
7. Loosen bearing setscrews and locking collar, and remove holddown bolts.

NOTE: To facilitate easy removal of setscrew fastened wheels, sheaves, or bearings, remove the setscrew completely. Taking care not to damage threads, insert a flat ended drift or punch, tap lightly and carefully return the material displaced on the shaft by the setscrew to its original place.

8. Remove bearing while observing the following precautions:
   a. Make certain fan shaft surface is not rough or scored. If so, clean up surface with fine emery cloth.
   b. Add a few drops of oil after cleanup of shaft end.

CAUTION

It should not be necessary to drive a new bearing onto shaft. If light tapping is needed, do not tap against outer race. Equipment damage may result.

9. Check fan shaft diameter at bearing mount. If worn by more than 0.001 in. below nominal, shaft should be replaced.
10. Install new bearing, tighten holddown bolts, and then tighten bearing locking collar or setscrews.
11. Make certain fan wheel does not rub sides of fan housing after installing new bearings.
12. Recoat fan shaft with a rust inhibitor or grease.
13. Replace sheave and belts. Adjust and align as described in Installation, Sheaves and V-Belts sections.
14. Replace access panels.
15. Restore electrical power.

Routine maintenance of the energy recovery cassettes includes inspection and cleaning. On occasion, a part may need to be completely replaced.

IMPORTANT: This unit contains an energy recovery wheel heat transfer device. Proper service and maintenance must be conducted as outlined below, or loss of heat transfer and overall system performance will occur.

1. Remove and clean or replace filters in adjoining section to the ERV wheel every 6 months or sooner, as required.
2. Remove and wash ERV wheel (or individual segments, if so equipped) every 6 months, or every 3 months maximum for smoky or polluted environments. See instructions for removal and cleaning details.

CLEANING

Periodic cleaning of the energy recovery wheel will depend on operating schedule, climate and contaminants in the indoor air exhausted and the outdoor air supplied to the building.

The wheel is "self-cleaning" with respect to dry particles due to its laminar flow characteristics. Smaller particles pass through; larger particles land on the surface and are blown clear as the flow direction is reversed. Any material that builds up on the face of the wheel can be removed with a brush or vacuum. All sizes can be vacuumed.

Cleaning the removable segments of the wheel (sizes 36-104) or the entire wheel (sizes 25 and 30) will remove oil-based aerosols that have condensed on energy transfer surfaces.

To clean removable segments of the wheel (sizes 36-104):

1. Access the wheel from the exhaust fan side. This may be easiest from the adjoining section, depending on the type of section installed. If it is necessary to access from the side of the wheel section, remove side panel as shown in Fig. 189.
2. Unlock two segment retainers, one on each side of the selected segment opening.
3. Use the tip of a flat screw driver to pop the segment out of the wheel. Repeat for each segment.
4. Brush foreign material from the face of the wheel. Wash the segments (or small wheels) in a 5% solution of non-acid based coil cleaner (such as Acti-Klean) or an alkaline detergent and warm water.
5. Soak the segments in the solution until grease and tar deposits are loosened. (NOTE: Some staining of the desiccant may remain and is not harmful to performance.) For better cleaning action, rapidly run a finger across the segment's surface to separate polymer strips.
6. Rinse dirty solution from segments and remove excess water before reinstalling the segments in the wheel.
7. Replace the segments using the Segment Installation and Replacement procedure on page 225.

To clean wheels (size 25 and 30) use this procedure and refer to Fig. 190:

1. Remove the ERV section side access panel.
2. Remove the upper and lower wheel center partition plates (1). This requires removing screws (a) of the upper and lower plate.
3. Remove the upper and lower (2) wheel retainer angles, being careful wheel does not tip and fall out.
4. Slide wheel cassette out of frame (toward main AHU), and out the side of the unit (3).
5. Follow Steps 2 through 4 of the cleaning procedure for removable segments.
6. Reinstall the wheel into the section by reversing Steps 1-5.

CASSETTE REPLACEMENT

1. Inspect the replacement cassette for freight damage upon receipt. Inspect the cassette frame, wheel assembly and segments for damage and verify that the wheel turns freely by hand (clockwise when viewed from pulley side). Report any damage immediately to the freight company.
2. Handle ERV cassettes with care. Lift by the bearing support beam. Holes are provided on both sides of the bearing support beams to facilitate rigging (Fig. 191).
3. Remove the ERV section side access panel.
4. Refer to Fig. 190. Remove the upper and lower wheel center partition plates. This requires removing screws (a) of the upper and lower plate.
5. Remove the upper and lower (2) wheel retainer angles, being careful wheel does not tip and fall out.
6. Slide wheel cassette out of frame (toward main AHU), and out the side of the unit (3).
7. The new ERV section may be mounted in any orientation. However, make certain that the frame remains flat and the bearing beams are not racked as shown in Fig. 192.
8. To ensure that the beams are not racked, check that the distance between the wheel rim and bearing beam is the same at each end of the bearing beam, to within 1/4 of an inch (dimension A and B in Fig. 192). Bearing beam racking of as little as 0.040 inches (Dim C in Fig. 192) will cause the wheel to tilt 3/16 in. at the rim. Adjusting the diameter seals (Fig. 193) will compensate for up to 1/4 in. of racking.

   NOTE: If racking is greater than 1/4 in., it must be corrected to ensure that the drive belt will not disengage from the wheel.
9. Wheel sections installed at angles greater than 30 degrees from vertical will require seal adjustment (Fig. 193). Adjust the diameter seals to avoid excessive wheel drag. A final check of seal adjustment is recommended for all designs.

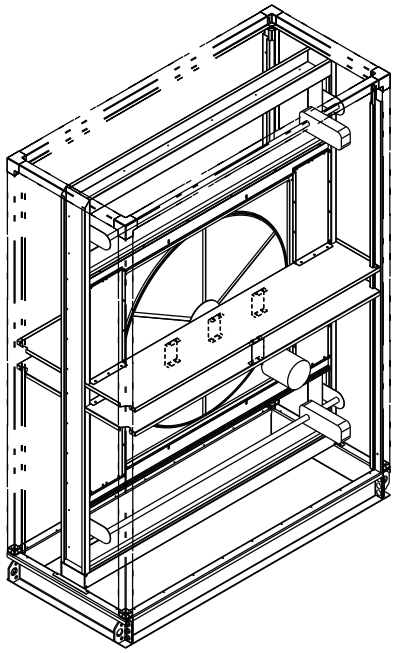

Fig. 189 — Remove Side Baffles

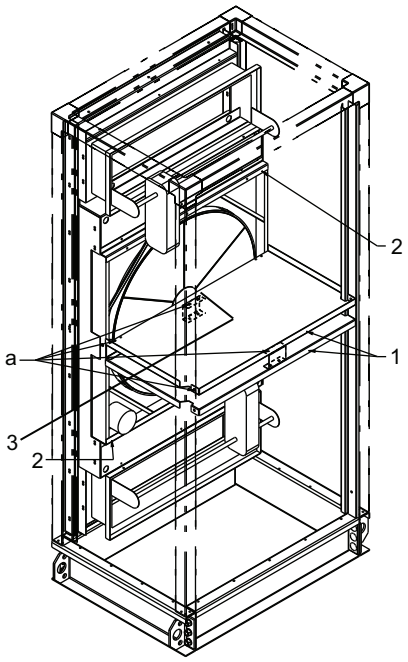

Fig. 190 — Remove Wheel for Cleaning (Wheel Sizes 25 and 30 Only)

ADJUSTING AIR SEALS

Four adjustable diameter seals are provided on each cassette to minimize air transfer between the counterflowing airstreams.

To adjust diameter seals:

1. Loosen the diameter seal adjusting screws and back seals away from wheel surface (Fig. 193).
2. Rotate the wheel clockwise until two opposing spokes are hidden behind the bearing support beam.
3. Using a folded piece of paper as a feeler gauge, position the paper between the wheel surface and the diameter seals.
4. Adjust the seals towards the wheel surface until a slight friction on the feeler gauge (paper) is detected when the gauge is moved along the length of the spoke.
5. Retighten the adjusting screws and recheck clearance with the feeler gauge.

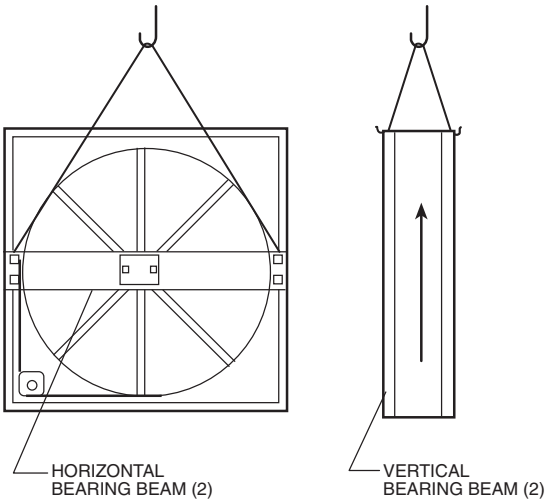

Fig. 191 — Lifting Hole Locations

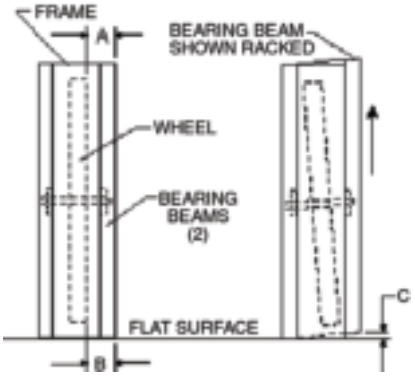

Fig. 192 — Avoid Racking of Frame

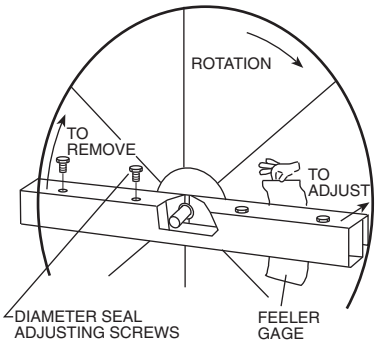

Fig. 193 — Diameter Seal Adjustment

SEGMENT INSTALLATION AND REPLACEMENT

Wheel segments are secured to the wheel frame by a segment retainer, which pivots on the wheel rim and is held in place by a segment retaining catch (Fig. 194).

To install wheel segments follow the steps below and refer to Fig. 194.

1. Unlock two segment retainers, one on each side of the selected segment opening.
2. With the embedded stiffener facing the motor side, insert the nose of the segment between the hub plates.
3. Holding segment by the two outer corners, press the segment towards the center of the wheel and inwards against the spoke flanges. If hand pressure does not fully seat the segment, insert the flat tip of a screw driver between the wheel rim and the outer corners of the segment and apply downward force while guiding the segment into place.
4. Close the latch each segment retainer under the segment retaining catch.
5. Slowly rotate the wheel 180 degrees. Install the second segment opposite the first for counterbalance. Rotate the two installed segments 90 degrees to balance the wheel while the third segment is installed. Rotate the wheel 180 degrees again to install the fourth segment opposite the third. Repeat this sequence with the remaining four segments.

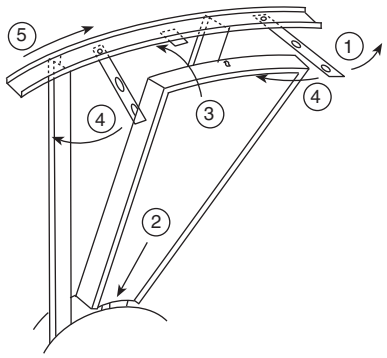

Fig. 194 — Segment Installation

WHEEL DRIVE MOTOR AND PULLEY REPLACEMENT

1. Disconnect power to the wheel drive motor.
2. Remove the belt from the pulley and position it temporarily around the wheel rim.
3. Loosen the set screw in the wheel drive pulley using an Allen wrench and remove the pulley from the motor drive shaft.
4. While supporting the drive motor's weight in one hand, loosen and remove the four mounting bolts.
5. Install the replacement motor using the hardware kit supplied.
6. Install the pulley as shown in Fig. 195 and secure the set screw to the drive shaft.
7. Stretch the belt over the pulley and engage it in the groove.
8. Follow the start-up procedure on page 215.

SOLID BELT REPLACEMENT

1. Obtain access to the pulley side bearing access plate. Bearing access plates are not provided on 25 to 36-in. cassettes. Remove the two bearing access plate retaining screws and the access plate. See Fig. 196.
2. Using a hex wrench, loosen the set screw in the bearing locking collar. Using a light hammer and drift (in drift pin hole), tap the collar in the direction of wheel rotation to unlock the collar. Remove the collar.
3. Using a socket wrench with extension, remove the two nuts that secure the bearing housing to the bearing support beam. Slide the bearing from the shaft.

   Slight hand pressure against wheel rim will lift the wheel's weight from the inner race of the bearing to assist bearing removal and installation. If not removable by hand, use a bearing puller.
4. Using a wrench, remove the diameter seal retaining screws (25 to 68-in. cassettes). Remove diameter seals (25 to 68-in. cassettes) from the bearing beam.

CAUTION

Protect hands and belt from possible sharp edges of hole in bearing support beam.

5. Form a small loop of belt and pass it through the hole in the bearing support beam. Grasp the belt at the wheel hub and pull the entire belt down. Loop the trailing end of the belt over the shaft (Fig. 196 shows the solid belt partially through the opening).
6. Reinstall the bearing onto the wheel shaft, being careful to engage the two locating pins into the holes in the bearing support beam. Secure the bearing with the two self-locking nuts.
7. Install the belts around the wheel and pulley according to the instructions provided with the belt.
8. Reinstall the diameter seals and tighten the retaining screws (see Adjusting Air Seals on page 224 for seal adjustment). Rotate the wheel clockwise to determine that it rotates freely with slight drag on the seals.
9. Reinstall the bearing locking collar. Rotate the collar by hand in the direction the wheel rotates (see label provided on each cassette for wheel rotation). Lock the collar in position by tapping the drift pin hole with a hammer and drift. Secure in position by tightening the set screw.
10. Reinstall the bearing access cover.
11. Apply power to the wheel motor and ensure that the wheel rotates freely without interference.

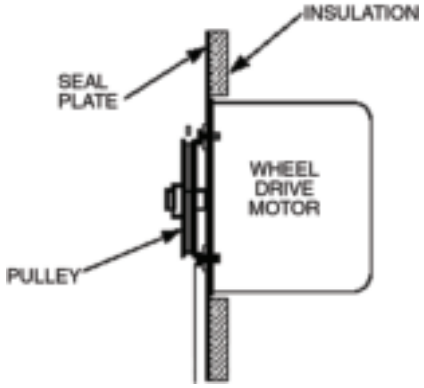

Fig. 195 — Pulley Location

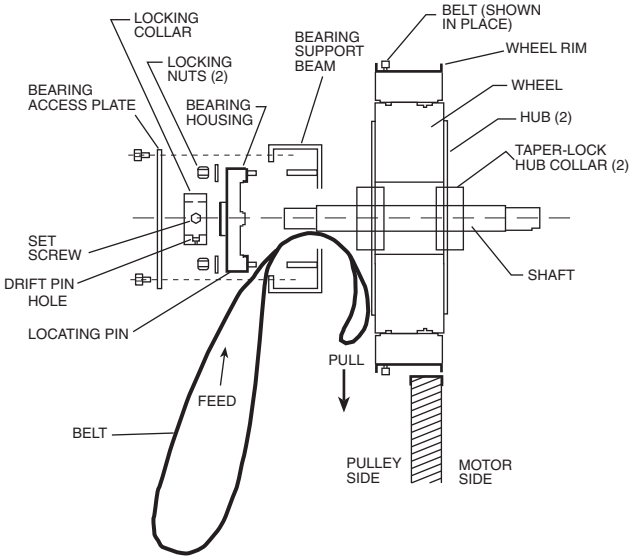

Fig. 196 — Solid Belt Replacement

LINK BELT REPLACEMENT

⚠ WARNING

Before performing service or maintenance operations on unit, turn off main power switch to unit. Electrical shock could cause personal injury.

1. Confirm the model number on the replacement belt kit matches the model number on the energy recovery cassette label.
2. Remove any remnant of old belt from cassette.
3. At location near pulley, attach the hook end of belt to wheel rim with tape, making sure that narrow side of "V" belt is positioned against rim and link is covered by the tape (see Fig. 197).
4. Rotate the wheel clockwise while feeding belt onto wheel rim (be careful not to twist belt) until taped end returns to pulley location. Remove tape from wheel.
5. Link belt ends together with belt wrapped around wheel (Fig. 198).
6. Rotate wheel clockwise to position connector approximately 180 degrees from pulley location.
7. At pulley location, insert the right angle belt retaining clip near spoke and between segment retainer latch and wheel rim as shown in Fig. 199.

IMPORTANT: To avoid release of segment retainer latch, do not insert retaining clip on other side of spoke.

8. Rotate wheel counterclockwise until belt retaining clip is within a few inches of the wheel bearing beam (see Fig. 200).
9. Lift and remove the belt from the wheel rim between a point opposite the pulley and belt retaining clip and stretch over pulley (see Fig. 201).
10. Rotate wheel clockwise until the belt is fully stretched onto pulley and wheel rim.
11. Remove belt retaining clip and rotate wheel by hand two rotations while observing that belt is not twisted as it enters pulley. Also ensure that belt is tracking midway between outer edge of rim and seal plate, or in belt guide channel where provided.
12. Apply power to cassette and observe belt tracking under power.

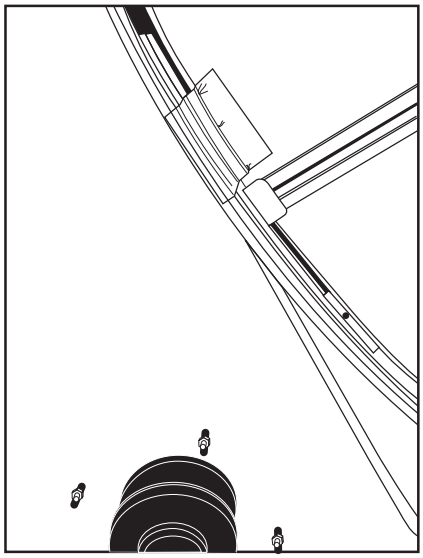

Fig. 197 — Belt Attached to Wheel Rim

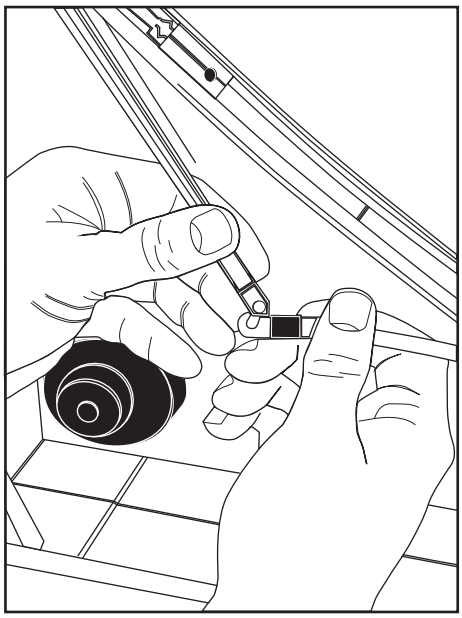

Fig. 198 — Belts Linked Together

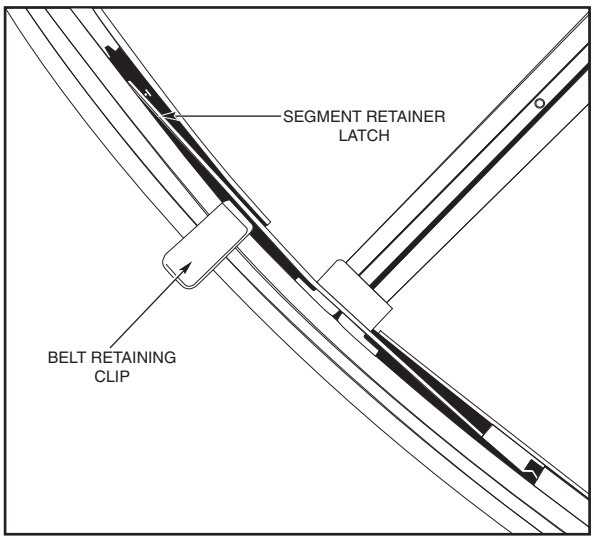

Fig. 199 — Detail of Belt Retaining Clip and Segment Retained Latch

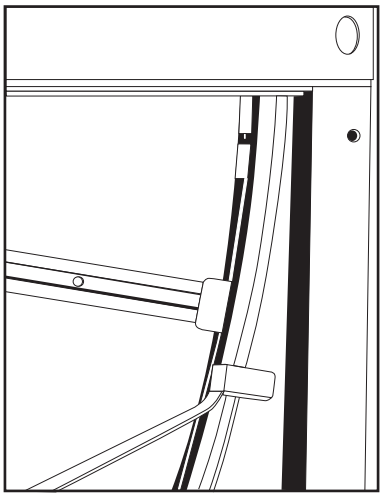

Fig. 200 — Detail of Belt Retaining Clip Location

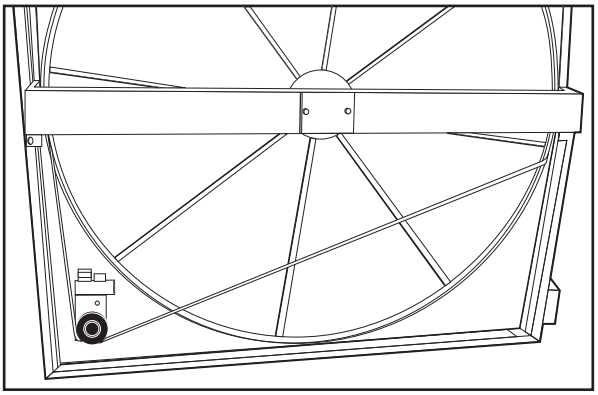

Fig. 201 — Belt Removal

OTHER MAINTENANCE

Wheel drive motor bearings are pre-lubricated and no further lubrication is necessary.

The wheel drive pulley is secured to the drive motor shaft by a combination of either a key or D-slot and setscrew. The setscrew is secured with removable locktite to prevent loosening. Annually confirm that the set screw is secure.

The wheel drive belt is a urethane stretch belt designed to provide constant tension through the life of the belt. No adjustment is required. Inspect the drive belt annually for proper tracking and tension. A properly tensioned belt will turn the wheel immediately after power is applied with no visible slippage during start-up.

Cleaning Unit Interior/Exterior

Unit interior/exterior panels should be wiped down using a damp soft cloth or sponge with a mixture of warm water and a mild detergent. Avoid using an abrasive cleaner, as damage to the paint could occur resulting in rust and corrosion. Chemicals such as paint thinners can damage the painted panels and should be avoided.

CAUTION

Avoid washing unit electrical devices such as motors, starters, electric heater control boxes, damper/valve actuators, sensors, switches, relays, etc. as serious personal injury or damage to the device could result.

Coil Cleaning

Chilled water, hot water, steam, and direct expansion coils must be cleaned regularly to maintain peak performance. Dirty coils can contribute to loss of cooling or heating capacity and efficiency, increased operating costs, and compressor problems on direct expansion systems. Dirt, grease, and other oils can also reduce the wettability of the coil surfaces, which can result in moisture blow-off from cooling coils and resulting water leakage problems. If the grime on the surface of the coils becomes wet, which commonly occurs with cooling coils, microbial growth (mold) can result, causing foul odors and health related indoor air quality problems.

Coils can become dirty over a period of time, especially if air filter maintenance is neglected. Coils should be inspected regularly and cleaned when necessary. If coil fins become dirty, pressure clean with hot water and detergent or a commercial coil cleaner. Be sure to rinse coils thoroughly after cleaning with chemical cleaners.

CAUTION

Follow all directions provided with the chemical cleaners to avoid personal injury, injury to others, and/or coil damage. Chemical coil cleaners may contain corrosive or harmful agents.

1. Disconnect all electrical power to the air-handling unit, including any separate power supplies for unit mounted controls (actuators, sensors, etc.).
2. Wear the appropriate protective clothing (eyewear, gloves, etc.).
3. Ensure there is sufficient access to the coil.
4. Use a vacuum with a soft tip brush to remove any dust and loose debris from both sides of the coil.
5. Clean the leaving airside of the coil first, then the entering airside, starting from the top of the coil and working downward. Apply a mild non-foaming commercial coil cleaner or detergent using a garden type sprayer. Rinse coil gently with clean warm water, avoiding high-pressure sprays, which can cause damage to coil fins. Use a block-off plate to prevent the water or chemical cleaner from blowing through the coil and into a clean, dry section of the unit. Confirm that the condensate drain line is free of debris during and following the coil cleaning process. Excess water from cleaning may result in flooding the unit as well as causing damage to the building if drain is plugged. If coil section does not have a drain pan, it is recommended that the coil be removed prior to cleaning.
6. Repeat Steps 1 through 5 as necessary.
7. Allow the coil to dry thoroughly before placing the system back into operation. A clean dry cloth may be used to wipe down the interior panels before placing the unit in operation.
8. Using a fin rake, straighten any coil fins that may have been bent or damaged during the cleaning process.
9. Replace all panels and parts that may have been removed prior to cleaning and restore electrical power to the unit.
10. Use caution to assure that no contaminated materials contact other areas of the unit or building. Properly dispose of any polluted materials and cleaning fluids.

Winter Shutdown

It is recommended that auxiliary drain piping be added to coil piping if yearly winterizing of coils is anticipated. This auxiliary piping should be located at the highest and lowest point on the respective header connection for each coil.

ANTIFREEZE METHODS OF COIL PROTECTION

1. Close coil water supply and return valves.
2. Drain coil as follows:

   Method I — "Break" flange of coupling at each header location. Separate flange or coupling connection to facilitate coil draining.

   Method II — Open both valves to auxiliary drain piping.
3. After coil is drained, Method I, connect line with a service valve and union from upper nozzle to an antifreeze reservoir. Connect a self-priming reversible pump between the low header connection and the reservoir. Method II, make connection to auxiliary drain valves.
4. Fill reservoir with any inhibited antifreeze acceptable to code and underwriter authority.
5. Open service valve and circulate solution for 15 minutes; then check its strength.
6. If solution is too weak, add more antifreeze until desired strength is reached, then circulate solution through coil for 15 minutes or until concentration is satisfactory.
7. Remove upper line from reservoir to reversible pump. Drain coil to reservoir and then close service valve.
8. Break union and remove reservoir and its lines.
9. Leave coil flanges or coupling open and auxiliary drain valves open until spring.

AIR-DRYING METHOD OF COIL PROTECTION

(Unit and coil must be level for this method.)

1. Close coil water supply and return main valves.
2. Drain coil as described in procedures for Antifreeze Methods of Coil Protection, preceding.
3. Connect air supply or air blower to inlet header connection and close its drain connection.
4. Circulate air and check for air-dryness by holding mirror in front of open vent in outlet header drain connection. Mirror will fog if water is still present.
5. Allow coil to stand for a few minutes; repeat Step 4 until coil is dry.

Coil Removal

NOTE: To reinstall coils, refer to Coil Installation section on page 129.

REMOVAL OF SINGLE HEIGHT COILS (SIZES 03-36)

The coils in horizontal coil sections must be removed from either side of the unit. Once the external panels are removed from the unit, the horizontal upper coil section frame members are easily removable from the framework to allow hoisting the coil up and out of the unit.

NOTE: Refer to Tables 19 and 20, (Dry Coil Weights) before attempting to remove a coil from the unit.

1. Lock open and tag all power supplies to unit fan motor and electric heaters if present.
2. Remove service panel/coil connection panel and the upstream service panel and set aside in a safe place.
3. a. On horizontal coil sections without another unit section stacked on top, remove the flat corner plug from each end piece of the top rail.
   b. Extract the Torx T25 screw visible within the exposed cavity. (Do not mix these screws with others; they are specific for this location.
   c. Set screws aside for re-installation of top rail.)
   d. Remove the top rail by pulling out at a 45-degree angle. Set top rail aside.

IMPORTANT: Properly support the coil to assure its stability before continuing with this procedure.

4. Remove the fastening screws from the upstream perimeter face of the coil that attach the coil to the coil baffles. This may require reaching through an opened damper assembly, reaching through a filter track after filters are removed, or removing a coil immediately upstream.

⚠ CAUTION

Do not handle the coil by the headers or connection nipples, as irreparable damage might occur that is NOT covered by warranty. Protect the finned surface from damage during all handling and shipping.

5. Slip the foam sealing sleeves off the connection nipples before removing the coil and set the sleeves aside.
6. The coil may now be hoisted out through the top opening or carefully slid out either side of the cabinet. Sections where the top frame rail cannot be removed may require slightly tipping of the coil from the vertical position, to clear the upper frame rail and seal.

REMOVAL OF STACKED COILS (SIZES 40 TO 110)

The coils in horizontal coil sections must be removed from either side of the unit. Once the external panels are removed from the unit, the horizontal upper coil section frame members are easily removable from the framework, to allow hoisting the coil up and out of the unit.

1. Lock open and tag all power supplies to unit fan motor and electric heaters if present.
2. a. Remove service panel/coil connection panel and the upstream service panel and set aside in a safe place.
   b. Remove the top rail by pulling out at a 45-degree angle. Set top rail aside.
3. a. On horizontal coil sections without another unit section stacked on top, remove the flat corner plug from each end piece of the top rail.
   b. Extract the Torx T25 screw visible within the exposed cavity. (Do not mix these screws with others; they are specific for this location. Set screws aside for re-installation of top rail.)
   c. Remove the top rail by pulling out at a 45-degree angle. Set top rail aside.

IMPORTANT: Properly support the coil to assure its stability before continuing with this procedure.

4. Remove the fastening screws of the uppermost coil from the upstream side. Note that the fastening screws pass through the vertical angle, baffles, and coil casing. See Fig. 202. Removal of the fastening screws may require reaching through an opened damper assembly, reaching through a filter track after filters are removed, or removing a coil immediately upstream.

⚠ CAUTION

Do not handle the coil by the headers or connection nipples, as irreparable damage might occur that is NOT covered by warranty. Protect the finned surface from damage during all handling and shipping.

5. Slip the foam sealing sleeves off the connection nipples before removing the coil and set the sleeves aside.
6. The upper coil may now be hoisted out through the top opening, or carefully slid out either side of the cabinet. Sections where the top frame rail cannot be removed may require slightly tipping of the coil from the vertical position, to clear the upper frame rail and seal.
7. On the upstream side of the stacked coils, remove and set aside the center baffle spanning the two coils. (See Fig. 202).
8. For sections that do not have a drain pan (heating only sections), remove the three hat channel spacer supports fastened to the top of the lower coil, and set aside.
9. For sections that do have a drain pan, remove the two hat channel spacer supports from the bottom of the coil section and set aside.
10. Remove the intermediate condensate drain pan.
11. Remove the spacer (hat channel) secured to the top center of the lower coil casing (see Fig. 203) and set aside.

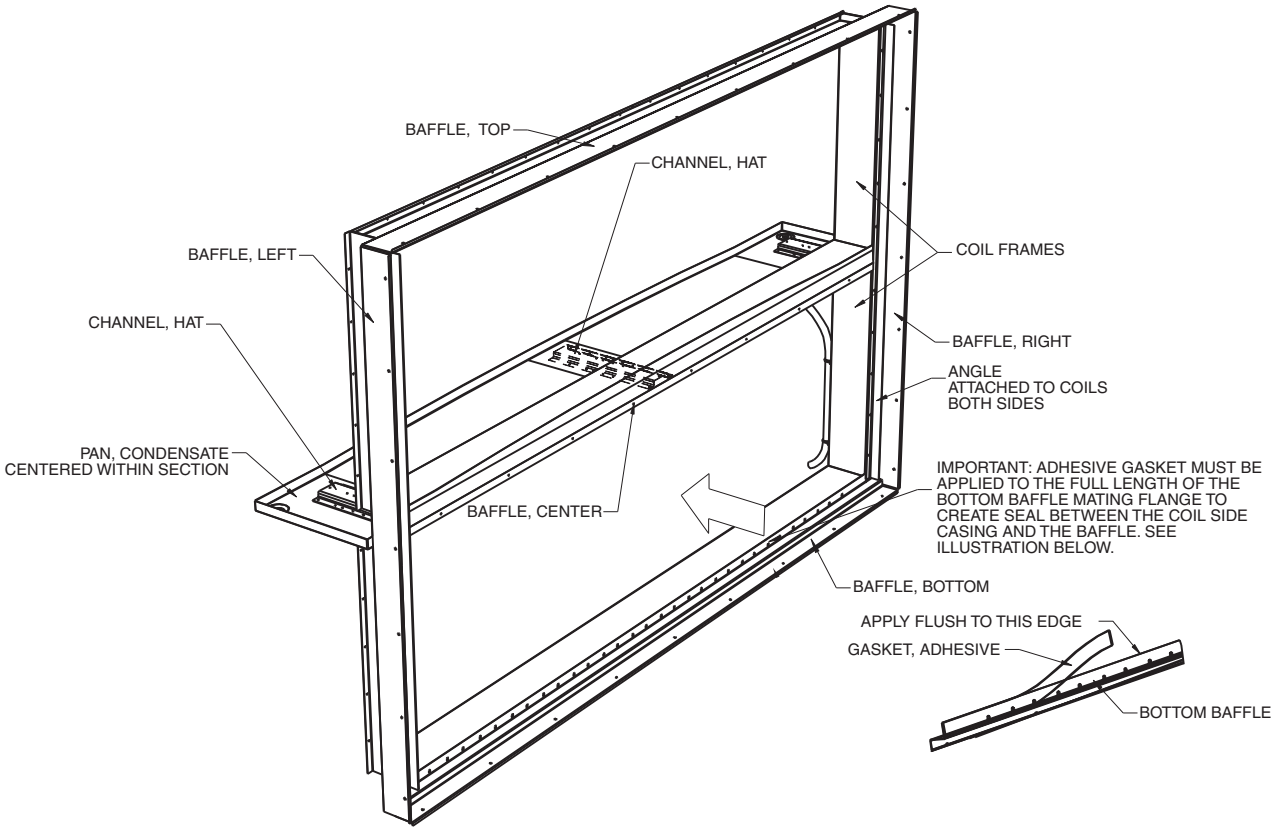

Fig. 202 — Coil Frames and Baffle

12. Remove the fastening screws of the lowermost coil from the upstream side. Note that the fastening screws pass through the vertical angle, baffles, and coil casing. (See Fig. 202). Removal of the fastening screws may require reaching through an opened damper assembly, reaching through a filter track after filters are removed, or removing a coil immediately upstream.

⚠ CAUTION

Do not handle the coil by the headers or connection nipples, as irreparable damage might occur that is NOT covered by warranty. Protect the finned surface from damage during all handling and shipping.

13. Slip the foam sealing sleeves off the connection nipples before removing the coil and set the sleeves aside.
14. The lower coil may now be hoisted out through the top opening, or carefully slid out either side of the cabinet.
15. Inspect the adhesive backed gasket applied to the lower baffle, spanning the entire unit, on the surface that contacts the coil. (See Fig. 202). If damaged, remove the remainder of the old gasket and replace.

Changing Coil Hand

NOTE: Electric heat coil hand cannot be changed.

NOTE: The coil cover panel is not part of the coil. Remove cover panel from end of unit. New holes must be cut in coil cover panel. Original holes must be plugged and insulated. New side panels may be necessary when changing coil hand.

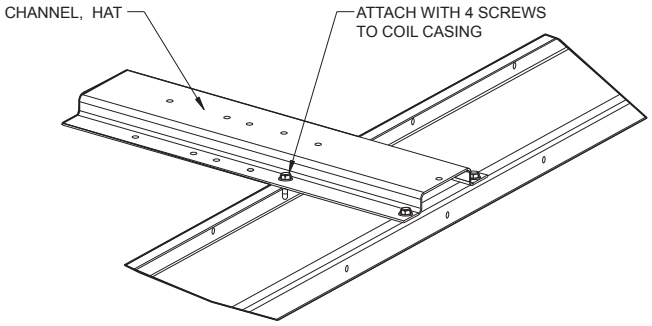

Fig. 203 — Spacer (Hat Channel)

NUFIN COILS

The NuFin coil is airflow direction sensitive, especially when used in dehumidifying applications. Hydronic versions are counterflow circuited for full gravity draining when installed level.

Correct installation will result in the typical bottom inlet on leaving air face and top outlet on entering air face of coil, a self-venting design. This will ensure cold air contact with cold water, and warm air with hot water.

Coil repositioning for opposite hand application will compromise one or more of these characteristics. However, there will be those situations where this may prove acceptable.

As a general rule, a change from counterflow circuiting to parallel flow for sensible heating and cooling applications will result in a 5% drop in net capacity per row of coil. In one and two row heating coils, the actual drop may not be measurable, thus of insignificant consequence.

It is important that the airflow direction of the NuFin coil be adhered to when latent cooling is possible. Significant moisture carryover from the face of the dehumidifying coil will result if this rule is violated, even at very low face velocities. The same result is often experienced if after-market fin coatings are applied.

If a NuFin hydronic coil is installed with correct airflow, but opposite piping hand, and counterflow is maintained, steps must be taken to ensure that the coil is continuously vented, and that the water velocity is maintained to prevent the coil from air-binding.

Hot or cold areas of the coil face (or otherwise broad temperature differences and stratification) are usually indications that one or more circuits are air-locked internally. This can result in coil freeze-up (a condition NOT covered by warranty).

Refrigerant coils may be rotated for opposite hand applications, maintaining the proper airflow direction.

Do not reposition the distributor(s); they will perform equally well in upflow or downflow positions. When soldering expansion valves to up-feed distributors, use the minimum satisfactory amount of solder to prevent damaging the valve or plugging passages.

DIRECT EXPANSION COILS

Rotate the coil in vertical plane and reinstall. Distributor must be on downstream side of coil. (Refer to Fig. 204.)

CHILLED WATER AND HOT WATER COILS

These coils can be rotated. If coil is rotated in vertical plane and reinstalled with counterflow maintained, supply will be at the top of the coil and return will be at the bottom. Ensure coil is continuously vented and water velocity is maintained to prevent air binding.

STEAM INNER DISTRIBUTING TUBE COILS

Rotate in horizontal plane and reinstall. (See Fig. 204.)

⚠ CAUTION

Chilled and hot water coils must not be rotated horizontally. If coils are rotated horizontally, severe water blow-off will result.

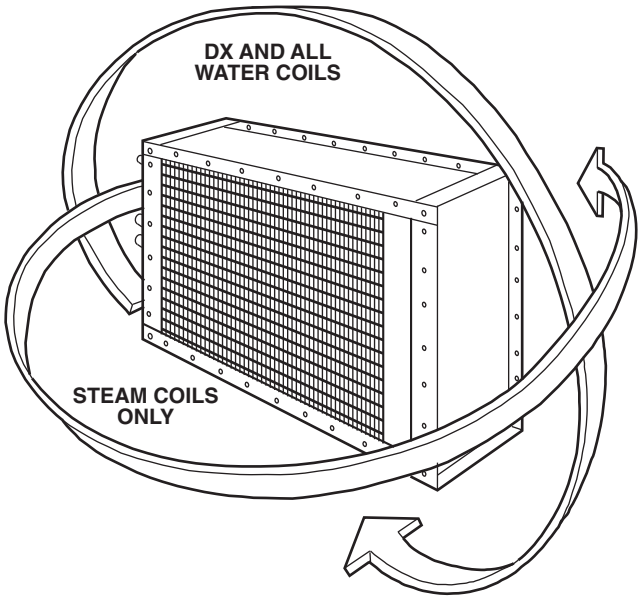

Fig. 204 — Coil Rotation

PIPING

Direct expansion, chilled water, and hot water coils should always be piped for counterflow. (Fluid should enter the coil at the leaving-air side.) Steam coils must have the condensate connection at bottom of coil.

To determine intervals for cleaning coils in contaminated air operations, pressure taps should be installed across the coils and checked periodically. Abnormal air pressure drop will indicate a need for cleaning the coils.

Annual maintenance should include:

1. Clean the line strainers.
2. Blow down the dirt leg.
3. Clean and check operation of steam traps.
4. Check operation of control valves.
5. Check the operation of check valves to prevent condensate flowback.
6. Check operation of thermostatic air vents, if used. A float and thermostatic trap will contain a thermostatic air vent. When the bellows is ruptured, it will fail closed.
7. Check operation of vacuum breakers.
8. Check operation of the thermal protection devices used for freeze-up protection.
9. Steam or condensate should not be allowed to remain in the coil during the off season. This will prevent the formation and build-up of acids.

There are additional precautions and control strategies, as found in various catalogs and in the ASHRAE Fundamentals Handbook and in the Carrier System Design Guide — Piping Section, when the entering-air temperature to the coil falls below 35°F. These conditions occur when IDT coils are used for pre-heat and/or face and bypass applications.

Freeze-up protection:

1. Use a strainer in the supply line and the dirt leg ahead of the trap.
2. Use a vacuum breaker in the return.
3. Do not use overhead returns from the coil. A floodback can occur.
4. An immersion thermostat to control outdoor-air dampers and the fan motor is recommended. This control is activated when the steam supply fails or the condensate temperature drops below a predetermined temperature, usually 120°F.
5. On low pressure and vacuum systems, the immersion thermostat may be replaced by a condensate drain with a thermal element. This element opens and drains the coil when the condensate temperature drops below 165°F. Note the thermal condensate drain is limited to 5 psig pressure. At greater coil pressures they will not open.

In spite of the precautions listed above, a coil may still freeze up. An oversize capacity coil, at partial load, with a modulating steam control valve will occasionally freeze. Freezing occurs in the 20°F to 35°F range of entering-air temperatures. A better installation would be an undersize coil, with an on/off control valve with thermostatic control in the outside air, set at 35°F air temperature, installed downstream of the first coil; or setting the minimum steam pressure at 5 psig.

Minihelic Gauge

The Minihelic gauge is a pressure gauge that is a selectable option in ***AHU*Builder**®. It gives job site personnel the ability to view the pressure drop across flat and angled filters, which gives an indication of filter integrity. See Fig. 205 for a picture of a typical Minihelic gauge.

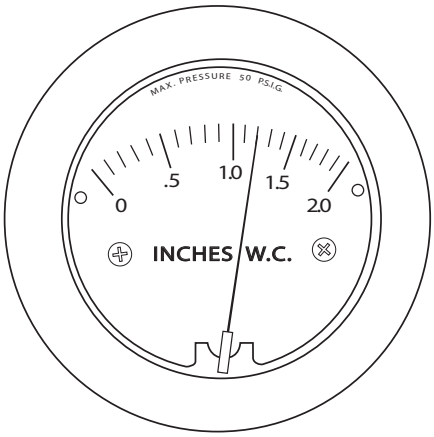

Fig. 205 — Typical Minihelic Gauge

This gauge is calibrated and zeroed in the vertical position at the factory. If the gauge is used in any other position, it must be re-zeroed each time the position is changed. Gauges with ranges under 5 inches w.c. (1.24 kPa), or the equivalent, should be used only in the vertical position.

If the Minihelic needs to be removed or replaced, after installation, the gauge may need to be zeroed before placing in operation. If re-zeroing is required, firmly hold the case of gauge with one hand and unscrew the front cover with the palm of the other hand in a counterclockwise direction. If difficult to loosen, place a small sheet of rubber between the cover and the palm of the hand. Zero-adjust screw is located behind the scale at the pair marked "zero." Use a hex allen wrench and adjust until pointer is on zero. This must be done with both pressure connections vented to atmosphere and the gauge oriented in the final mounting position. Replace cover.

CAUTION

Attempted field repair may negatively impact your warranty. Recalibration or repair by the user is not recommended.

CALIBRATION CHECK

Select a second gauge or manometer of known accuracy and in an appropriate range. Use short lengths of rubber or vinyl tubing to connect the high-pressure side of the Minihelic gauge and the test gauge to two legs of a tee. Very slowly, apply pressure through the third leg. Allow enough time for pressure to equalize throughout the system and for fluid to drain. If a manometer is being used. Compare readings. If the gauge being tested exceeds rated accuracy, it should be returned to the factory for recalibration.

MAINTENANCE

No lubrication or periodic servicing is required. Keep case exterior and cover clean. Occasionally, disconnect pressure lines to vent both sides of the gauge to atmosphere and re-zero the gauge.

Filters

See Table 51 for filter data for flat filter section, angle filter section, bag-cartridge filter section, and filter mixing box section. Filters are field supplied.

Air filters should be inspected regularly and changed when dirty. Filter life can vary greatly from one unit to another, depending upon the application and the amount of contaminants in the return and ventilation air entering the air handler. Each job should be evaluated and maintenance schedules established accordingly. At a minimum, the filters should be changed at the beginning of the cooling and heating seasons.

Although not a direct part of the air handler, outdoor air inlet screens and/or grilles that may be present should also be checked regularly and cleaned as necessary. They can easily become plugged with debris, grease, or other contaminants, depending upon their location. This reduces the availability of ventilation air, which can contribute to indoor air quality problems.

All filter sections use adjustable blank-off plates to close off any airway area not filled with filter media. Check blank-off plates to prevent unfiltered air from bypassing the filters. Blank-off plates must be on door side of unit.

BAG-CARTRIDGE FILTERS

Side loading bag-cartridge filter section can use either bag or rigid filters, 6-in. to 30-in. deep, with 7/8 in. header. They *will not* accept headerless rigid filters.

Face loading bag-cartridge filter sections can use either bag or rigid filters and are loaded from the front of the section. These sections use Puro[1] Frame holding frames located at the downstream edge of the filter section for prefilters and bag/cartridge filters. Cartridge filters without headers can extend upstream of the holding frame by 24 inches. Cartridge and bag filters with 7/8 in. header extend downstream of the filter section with filter length limited only by the length of the plenum following the filter section. Filter elements are retained in frames by field supplied filter springs. To replace filter elements, remove springs, insert elements with bag or cartridge downstream and reinstall springs. (See Fig. 206.)

See Fig. 207 for typical track for bag-cartridge filter section used on draw-thru unit.

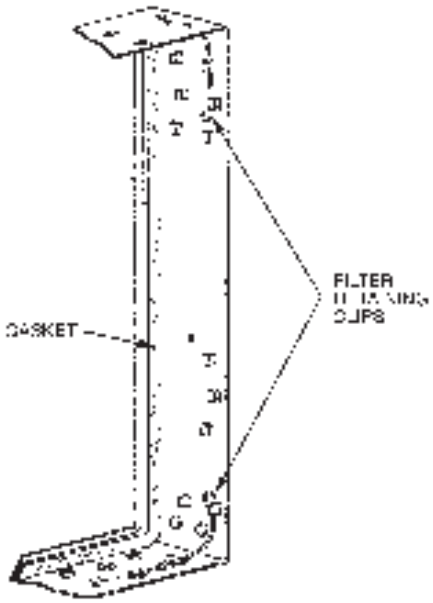

Fig. 206 — Face Loading Filter Frame

1. Third-party trademarks and logos are the property of their respective owners.

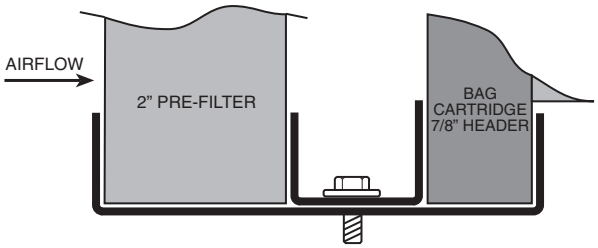

Fig. 207 — Track for Draw-Thru Bag Cartridge Filter Section

Table 51 — Filter Data

FLAT FILTER ARRANGEMENT (2-in. or 4-in.)																
FILTER SIZE	39M UNIT SIZE															
	03W	06W	07T	08W	09T	10W	11T	12T	12W	14W	16T	17W	18T	21W	22T	25T
16x20	—	—	4	—	4	—	—	—	6	3	—	—	—	—	—	—
16x25	—	—	—	3	—	—	4	—	—	—	—	—	—	—	6	2
20x20	—	—	—	—	—	—	—	—	—	3	6	6	—	—	—	—
20x24	—	—	—	—	—	—	—	—	—	—	—	—	—	—	—	—
20x25	1	2	—	—	—	3	—	4	—	—	—	—	6	6	2	6
FACE AREA (SQ FT)	3.5	6.9	8.9	8.3	8.9	10.4	11.1	13.9	13.3	15.0	16.7	16.7	20.8	20.8	23.6	26.4

FLAT FILTER ARRANGEMENT (2-in. or 4-in.)																
FILTER SIZE	39M UNIT SIZE															
	25W	30T	30W	35T	36W	37T	40W	42T	50W	51T	58T	61W	72W	85W	96W	110W
16x20	—	—	—	—	—	—	—	—	—	4	—	14	33	38	24	27
16x25	—	—	—	3	—	—	—	9	—	—	—	14	—	—	—	—
20x20	—	—	—	—	—	3	—	—	—	—	16	—	—	—	—	—
20x24	8	9	10	—	—	9	—	—	—	—	4	—	—	—	—	—
20x25	—	—	—	9	12	—	13	6	15	12	—	—	—	—	12	14
FACE AREA (SQ FT)	26.7	30.0	33.3	39.6	41.7	38.3	45.1	45.8	52.1	50.6	57.8	70.0	75.6	84.4	95.0	108.6

ANGLE FILTER ARRANGEMENT (2-in. or 4-in.)																
FILTER SIZE	39M UNIT SIZE															
	03W	06W	07T	08W	09T	10W	11T	12T	12W	14W	16T	17W	18T	21W	22T	25T
12x24	—	—	—	—	—	—	—	—	—	—	—	12	—	—	—	—
16x20	—	4	—	—	—	6	8	8	—	—	—	—	—	—	—	—
16x25	2	—	4	4	4	—	—	—	—	—	—	—	—	12	12	12
20x20	—	—	—	—	—	—	—	—	6	2	8	—	—	—	—	—
20x24	—	—	—	—	—	—	—	—	—	4	—	—	—	—	—	—
20x25	—	—	—	—	—	—	—	—	—	—	—	—	8	—	—	—
FACE AREA (SQ FT)	5.6	8.9	11.1	11.1	11.1	13.3	17.8	17.8	16.7	18.9	22.2	24.0	27.8	33.3	33.3	33.3

ANGLE FILTER ARRANGEMENT (2-in. or 4-in.)																
FILTER SIZE	39M UNIT SIZE															
	25W	30T	30W	35T	36W	37T	40W	42T	50W	51T	58T	61W	72W	85W	96W	110W
12x24	—	—	—	—	—	—	—	—	—	—	—	—	—	—	—	—
16x20	—	—	—	—	—	24	—	—	18	30	32	24	56	64	64	72
16x25	12	16	16	18	—	—	24	—	12	—	—	16	—	—	—	—
20x20	—	—	—	—	—	—	—	—	—	—	—	—	—	—	—	—
20x24	—	—	—	—	—	—	—	—	—	—	—	—	—	—	—	—
20x25	—	—	—	—	16	—	—	18	—	—	—	—	—	—	—	—
FACE AREA (SQ FT)	33.3	44.4	44.4	50.0	55.5	53.3	66.7	62.5	73.3	66.7	71.1	97.8	124.4	142.2	142.2	160.0

See notes on page 234.

Table 51 — Filter Data (cont)

FILTER MIXING BOX ARRANGEMENT (2-in. or 4-in.)																
FILTER SIZE	39M UNIT SIZE															
	03W	06W	07T	08W	09T	10W	11T	12T	12W	14W	16T	17W	18T	21W	22T	25T
12x24	—	—	—	—	—	—	—	—	—	—	—	12	—	—	—	—
16x20	—	4	—	—	—	6	8	8	—	—	—	—	—	—	—	—
16x25	2	—	4	4	4	—	—	—	—	—	—	—	—	12	12	12
20x20	—	—	—	—	—	—	—	—	6	2	8	—	—	—	—	—
20x24	—	—	—	—	—	—	—	—	—	4	—	—	—	—	—	—
20x25	—	—	—	—	—	—	—	—	—	—	—	—	8	—	—	—
FACE AREA (SQ FT)	5.6	8.9	11.1	11.1	11.1	13.3	17.8	17.8	16.7	18.9	22.2	24.0	27.8	33.3	33.3	33.3

FILTER MIXING BOX ARRANGEMENT (2-in. or 4-in.)																
FILTER SIZE	39M UNIT SIZE															
	25W	30T	30W	35T	36W	37T	40W	42T	50W	51T	58T	61W	72W	85W	96W	110W
12x24	—	—	—	—	—	—	—	—	—	—	—	—	—	—	—	—
16x20	—	—	—	—	—	24	—	—	18	30	32	24	56	64	64	72
16x25	12	16	16	18	—	—	24	—	12	—	—	16	—	—	—	—
20x20	—	—	—	—	—	—	—	—	—	—	—	—	—	—	—	—
20x24	—	—	—	—	—	—	—	—	—	—	—	—	—	—	—	—
20x25	—	—	—	—	16	—	—	18	—	—	—	—	—	—	—	—
Face Area (sq ft)	33.3	44.4	44.4	50.0	55.5	53.3	66.7	62.5	73.3	66.7	71.1	97.8	124.4	142.2	142.2	160.0

SHORT SIDE LOAD BAG/CARTRIDGE FILTER ARRANGEMENT																
FILTER SIZE	39M UNIT SIZE															
	03W	06W	07T	08W	09T	10W	11T	12T	12W	14W	16T	17W	18T	21W	22T	25T
12x24	—	1	—	—	2	1	2	2	3	3	3	3	1	—	—	—
24x24	1	1	2	2	1	2	2	2	2	2	2	3	4	6	6	6
FACE AREA (SQ FT)	4	6	8	8	8	10	12	12	14	14	14	18	18	24	24	24

SHORT SIDE LOAD BAG/CARTRIDGE FILTER ARRANGEMENT																
FILTER SIZE	39M UNIT SIZE															
	25W	30T	30W	35T	36W	37T	40W	42T	50W	51T	58T	61W	72W	85W	96W	110W
12x24	—	3	—	—	4	5	4	3	3	6	4	7	4	4	9	6
24x24	6	6	8	9	8	6	8	9	12	9	12	12	16	20	20	24
FACE AREA (SQ FT)	24	30	32	36	40	34	40	42	54	48	56	62	72	88	98	108

LONG SIDE LOAD BAG/CARTRIDGE FILTER ARRANGEMENT																
FILTER SIZE	39M UNIT SIZE															
	03W	06W	07T	08W	09T	10W	11T	12T	12W	14W	16T	17W	18T	21W	22T	25T
12x24	—	1	—	—	2	1	2	2	3	3	3	3	1	—	—	—
24x24	1	1	2	2	1	2	2	2	2	2	2	3	4	6	6	6
FACE AREA (SQ FT)	4	6	8	8	8	10	12	12	14	14	14	18	18	24	24	24

LONG SIDE LOAD BAG/CARTRIDGE FILTER ARRANGEMENT																
FILTER SIZE	39M UNIT SIZE															
	25W	30T	30W	35T	36W	37T	40W	42T	50W	51T	58T	61W	72W	85W	96W	110W
12x24	—	3	—	—	4	5	4	3	3	6	4	7	4	4	9	6
24x24	6	6	8	9	8	6	8	9	12	9	12	12	16	20	20	24
FACE AREA (SQ FT)	24	30	32	36	40	34	40	42	54	48	56	62	72	88	98	108

See notes on page 234.

Table 51 — Filter Data (cont)

FRONT LOAD BAG/CARTRIDGE FILTER ARRANGEMENT																
FILTER SIZE	39M UNIT SIZE															
	03W	06W	07T	08W	09T	10W	11T	12T	12W	14W	16T	17W	18T	21W	22T	25T
12x24	—	1	—	—	2	1	2	2	3	3	3	3	1	—	—	—
24x24	1	1	2	2	1	2	2	2	2	2	2	3	4	6	6	6
FACE AREA (SQ FT)	4	6	8	8	8	10	12	12	14	14	14	18	18	24	24	24

FRONT LOAD BAG/CARTRIDGE FILTER ARRANGEMENT																
FILTER SIZE	39M UNIT SIZE															
	25W	30T	30W	35T	36W	37T	40W	42T	50W	51T	58T	61W	72W	85W	96W	110W
12x24	—	3	—	—	4	4	4	—	3	4	7	7	4	4	9	6
24x24	6	6	8	9	8	8	8	12	12	12	12	12	16	20	20	24
FACE AREA (SQ FT)	24	30	32	36	40	34	40	42	54	48	56	62	72	88	98	108

FRONT LOAD/CARTRIDGE/HEPA FILTER ARRANGEMENT																
FILTER SIZE	39M UNIT SIZE															
	03W	06W	07T	08W	09T	10W	11T	12T	12W	14W	16T	17W	18T	21W	22T	25T
12x24	—	1	—	—	2	1	2	2	3	3	3	3	1	—	2	—
24x24	1	1	2	2	1	2	2	2	2	2	2	3	4	6	4	6
FACE AREA (SQ FT)	4	6	8	8	8	10	12	12	14	14	14	18	18	24	24	24

FRONT LOAD/CARTRIDGE/HEPA FILTER ARRANGEMENT																
FILTER SIZE	39M UNIT SIZE															
	25W	30T	30W	35T	36W	37T	40W	42T	50W	51T	58T	61W	72W	85W	96W	110W
12x24	—	3	—	—	4	4	4	3	3	6	4	7	4	—	5	6
24x24	6	6	8	9	8	8	8	9	12	9	12	12	16	20	20	24
FACE AREA (SQ FT)	24	30	32	36	40	34	40	42	54	48	56	62	72	88	98	108

NOTES:

1. Do not exceed filter manufacturer's velocity limits when selecting filters.
2. There are two dedicated filter sections for 2 in. or 4 in. flat filters.
3. Angle filter or filter mixing box sections can be configured to accept either 2 in. or 4 in. filters.
4. Draw-thru bag/cartridge filter sections accept 2 in. pre-filters. Filters must be a combination of bag filters in the sizes shown or 6 in. or 12 in. deep rigid media with 7/8 in. header.
5. The draw-thru bag/cartridge filter section is designed for side loading of filter media with a header for a 1 in. slide in track.
6. The blow-thru bag/cartridge/HEPA filter section is designed for face loading of filters ONLY (no side loading).
7. The blow-thru filter section requires filter media with spring clips, wire brackets, or retainers for use in a Puro Frame holding frame. The Puro Frame is available for unit sizes 03-61 only.

IN-TRACK BAFFLES

Filter sections are shipped with adjustable in-track baffles. When installed properly as shown in Fig. 208 and 209, the baffles close off empty space in the track preventing air from bypassing the filters. Remove the baffles to install filter elements, and replace the adjustable baffles after the filters are in place. The adjustable baffles should be spread far enough apart to ensure slight compression in the foam gasket when closing the section door.

NOTE: If the foam gasket adhered to the inside panel becomes detached, remove it completely. Then, use the dimple pattern marks on the inside panel as a guide to adhere the replacement foam gasket. The McMaster-Carr foam gasket part number is 93375K698, and the current Carrier part number is 99SR04162801.

To minimize bypass through the blank-off plate adjustment slots, use foil tape to cover the slot openings.

NOTE: In case of detachment of the gasket adhered to the inside panel of the door, remove it completely and follow the pattern of marks on the inside panel to attach a replacement. This applies to sections with In-track Baffles. The McMaster-Carr foam gasket part number is 93375K698 and the current Carrier part number is 99SR04162801.

FLAT FILTERS

The flat filter sections come in 4-in. or 6-in. filter tracks. The track size is a selectable option in ***AHU*Builder**® software. See Fig. 208 and 209 for sectional views of each size.

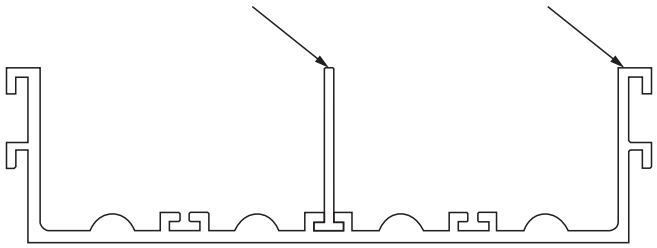

Fig. 208 — 2-in. Track Assembly (4-in. Track)

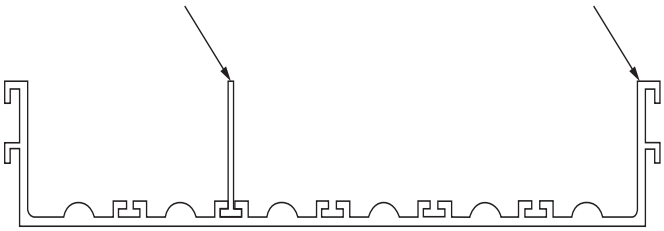

Fig. 209 — 6-in. Track Assembly

Depending on the filter size (2-in., 4-in., or 6-in.) the T-bar can be repositioned to accept the available filter.

ANGLE FILTERS

Angle filter sections accommodate 2-in. or 4-in. thick filters. The section as shipped accepts 2-in. filters. Remove angle spacer in each track to provide the space required to accommodate 4-in. filters. Refer to Fig. 210 for details.

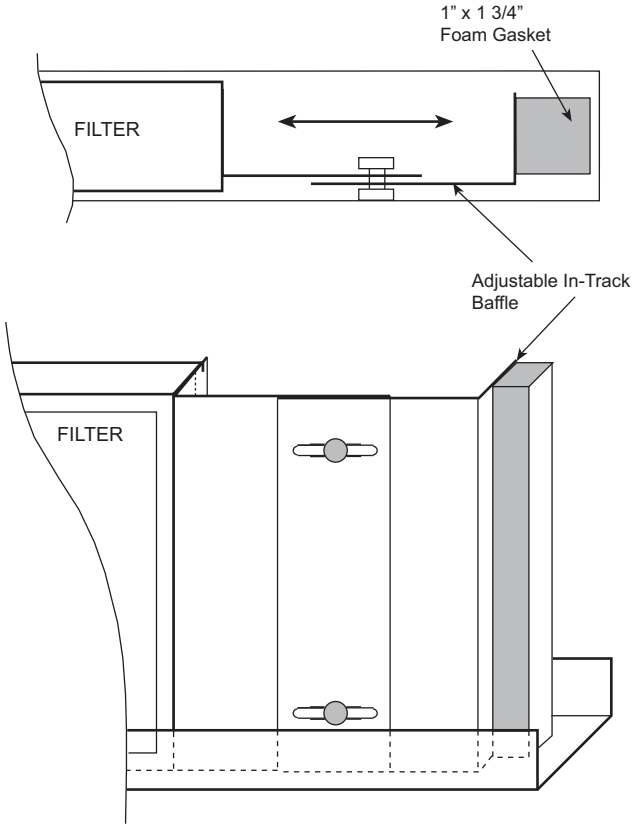

Fig. 210 — In-Track Baffle for Flat, Angle and Sideloading Bag/Cartridge Filter Sections

HEPA FILTERS

The Puro Frame (available in sizes 03-61 only), HEPA holding frame will accommodate 12-in. deep filters. HEPA filter sections used in blow-thru applications are loaded from the front, through the access door or removable panel. The HEPA filters are retained in the frame with retaining brackets (see Fig. 211 and 212). RTV sealant should be used to seal between the filter frame and the filter media's neoprene gasket to ensure a leaktight installation. Refer to Fig. 211 for details. Downstream edge of frame to frame and frame to baffle shall be sealed with RTV sealant.

Filter arrangements are shown in Fig. 213-217.

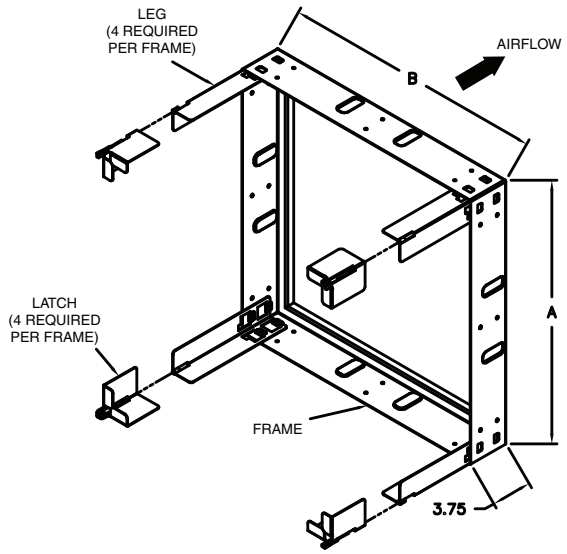

HEPA FILTER			HEPA FRAME			
Height A (in.)	Width B (in.)	Depth (in.)	Type	Part No.	Height (in.)	Width (in.)
24	24	11-1/2	GALV	3061975-001	24-5/8	24-5/8
12	24	11-1/2	GALV	3061983-001	12-5/8	24-5/8
24	24	11-1/2	SS304	3061975-002	24-5/8	24-5/8
12	24	11-1/2	SS304	3061983-002	12-5/8	24-5/8

NOTES:
1. Filter sizes are 5/8-in. smaller than frame sizes.
2. 12-in. x 24-in. frame may be rotated for 24-in. x 12 in. arrangement; 12-5/8 in. x 24-5/8 in. frame may be rotated for 24-5/8 in. x 12-5/8 in. arrangement.
3. Recommended RTV sealant: GE128.
4. Filter bracket latch part numbers are 3062007-001 (galvanized) and 3062007-002 (stainless steel).
5. Filter bracket leg part numbers are 3061991-001 (galvanized) and 3061991-002 (stainless steel).

Fig. 211 — Puro Frame, HEPA Holding Frame, Sizes 03 to 61

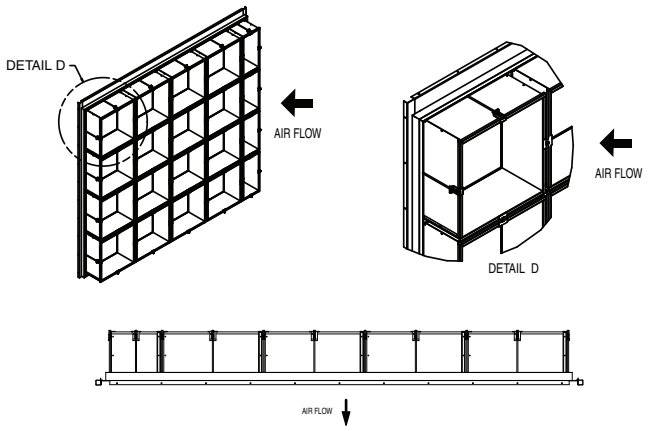

Fig. 212 — HEPA Holding Frame, Sizes 72 to 110

Fan Shaft Bearing Removal

1. Isolate the unit from the system by closing dampers to prevent "pin wheeling." Tie off the fan wheel to prevent rotation.
2. Lock open and tag electrical disconnect.
3. Enter through fan section access door or remove panels as required.
4. Loosen motor base to frame bolts. Adjust motor to release belt tension and remove belts. *Do not stretch belts over sheaves*. Damage to belts can result.
5. Remove bolts on bushing of fan shaft sheave, insert bolts in jacking hole provided on bushing and slowly jack bushing from sheave. Remove bushing and sheave.
6. Loosen bearing holddown bolts, block shaft up.
7. Loosen bearing setscrews and locking collar, and remove holddown bolts.

NOTE: To facilitate easy removal of setscrew fastened wheels, sheaves, or bearings, remove the setscrew completely. Taking care not to damage threads, insert a flat ended drift or punch, tap lightly and carefully return the material displaced on the shaft by the setscrew to its original place.

8. Remove bearing while observing the following precautions:
   a. Make certain fan shaft surface is not rough or scored. If so, clean up surface with fine emery cloth.
   d. Add a few drops of oil after cleanup of shaft end.

⚠ CAUTION

It should not be necessary to drive a new bearing onto shaft. If light tapping is needed, do not tap against outer race. Equipment damage may result.

9. Check fan shaft diameter at bearing mount. If worn by more than 0.001 in. below nominal, shaft should be replaced.
10. Install new bearing, tighten holddown bolts, and then tighten bearing locking collar or setscrews.
11. Make certain fan wheel does not rub sides of fan housing after installing new bearings.
12. Recoat fan shaft with a rust inhibitor or grease.
13. Replace sheave and belts. Adjust and align as described in Installation, Sheaves and V-Belts sections.
14. Replace access panels.
15. Restore electrical power.

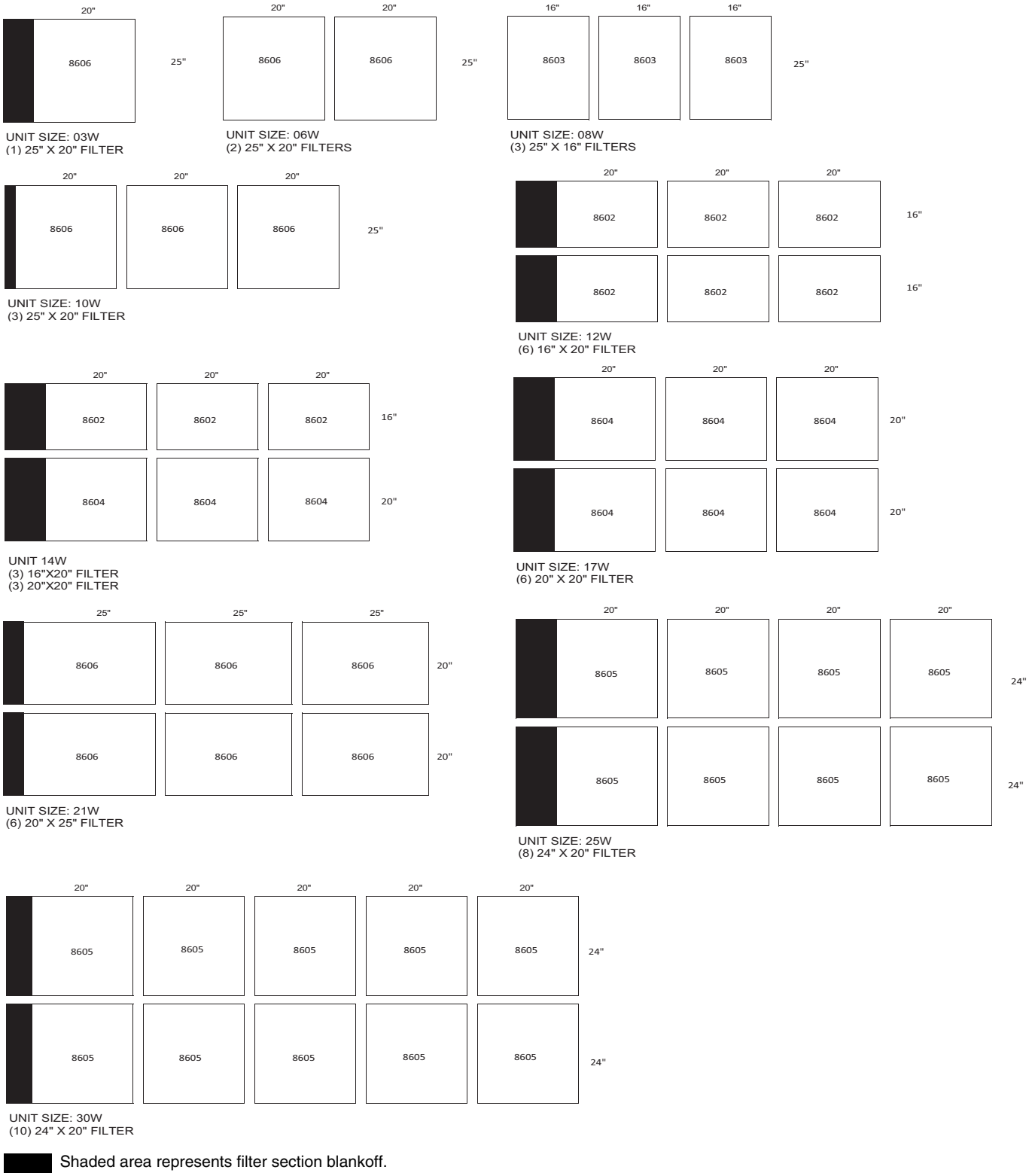

Shaded area represents filter section blankoff.

Fig. 213 — Flat Filter Arrangement — 2-in. or 4-in.

UNIT SIZE: 36W
(12) 20" X 25" FILTER

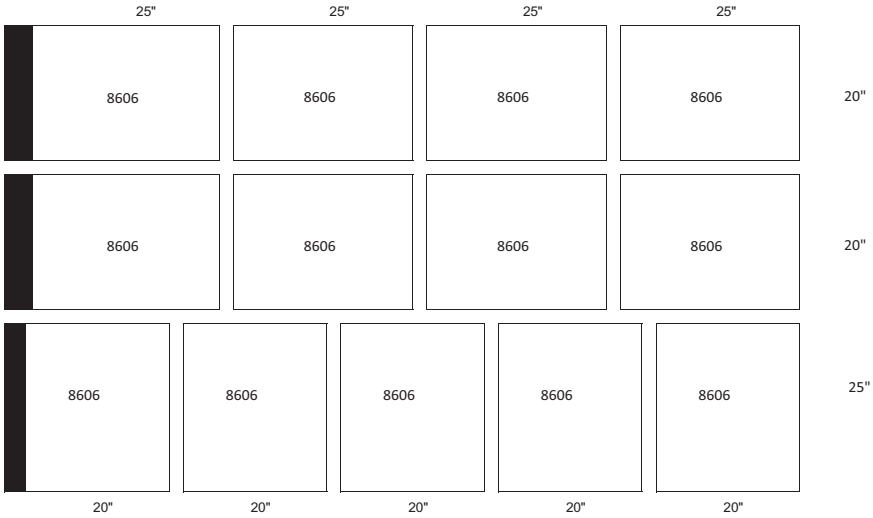

UNIT SIZE: 40W
(13) 20"X25" FILTER

UNIT SIZE: 50W
(15) 20"X25" FILTER

Shaded area represents filter section blankoff.

Fig. 213 — Flat Filter Arrangement — 2-in. or 4-in. (cont)

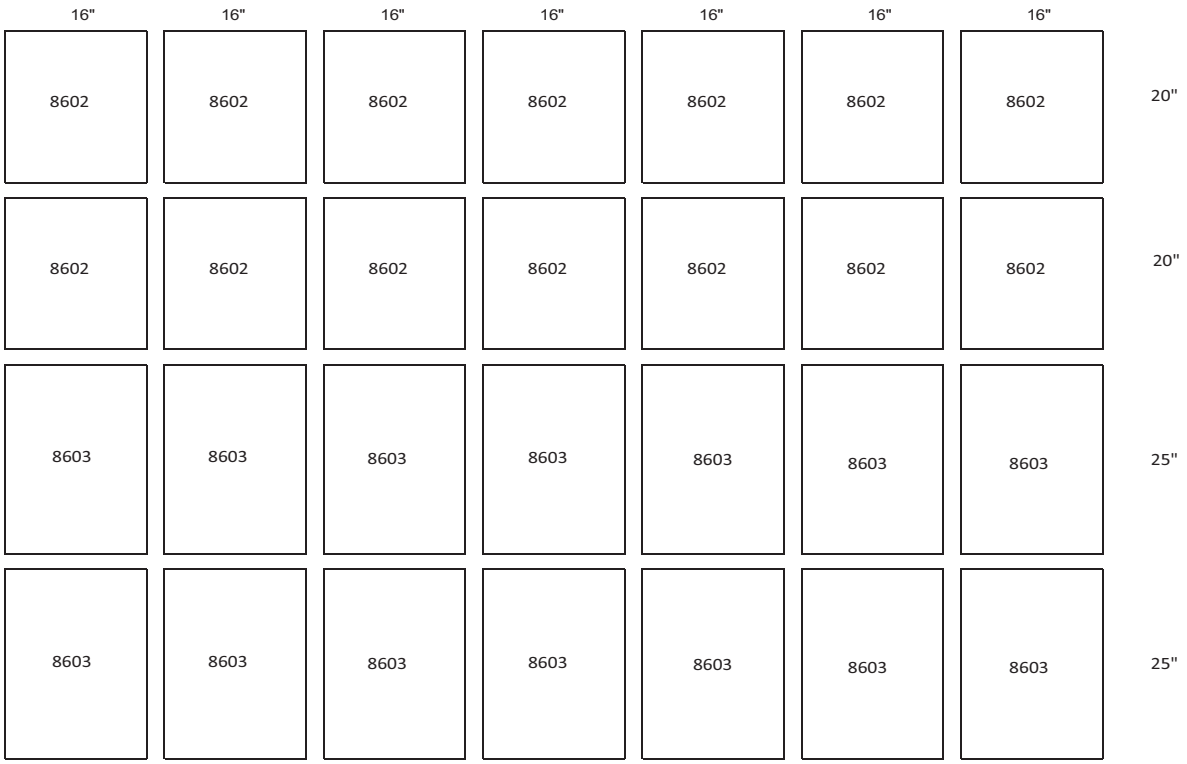

UNIT SIZE: 61W
(14) 20" X 16" FILTER
(14) 25" X 16" FILTER

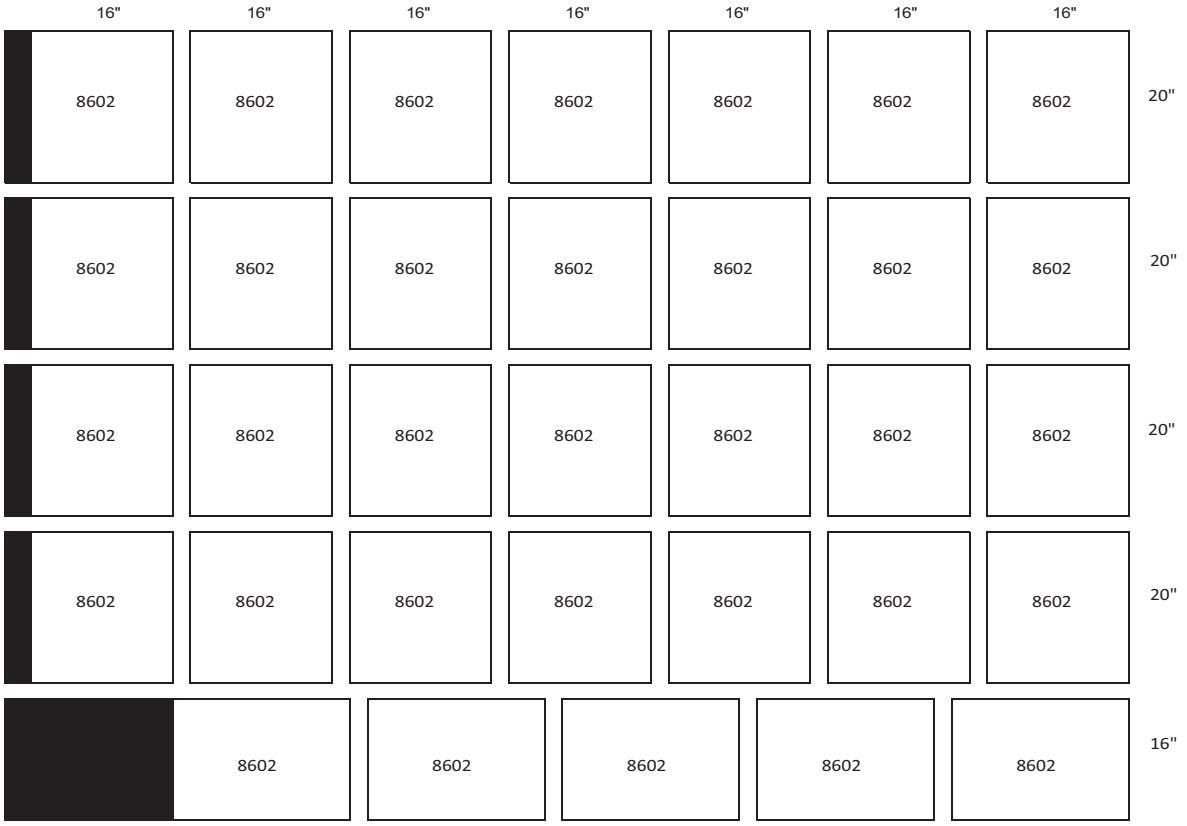

UNIT SIZE: 72W
(33) 20" X 16" FILTER

Shaded area represents filter section blankoff.

Fig. 213 — Flat Filter Arrangement — 2-in. or 4-in. (cont)

UNIT SIZE: 85W
(38) 20" X 16" FILTER

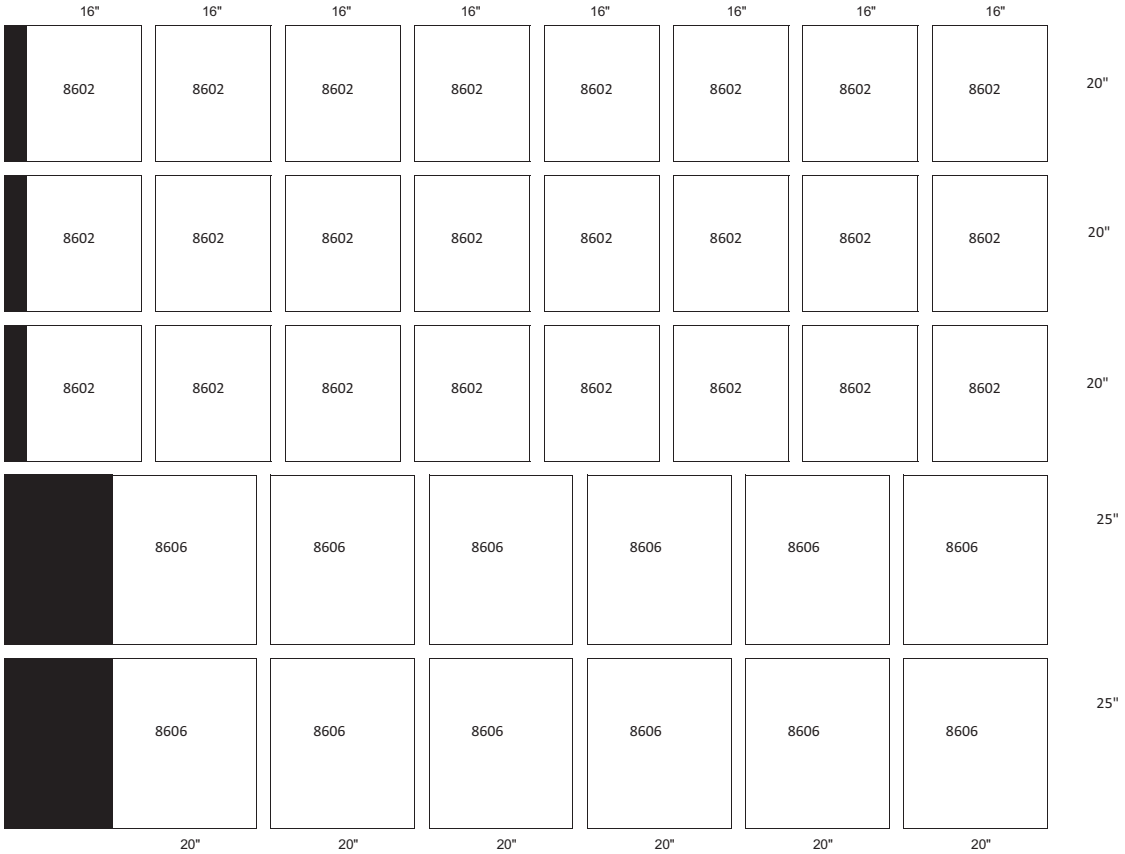

UNIT SIZE: 96W
(24) 20" X 16" FILTER
(12) 20" X 25" FILTER

Shaded area represents filter section blankoff.

Fig. 213 — Flat Filter Arrangement — 2-in. or 4-in. (cont)

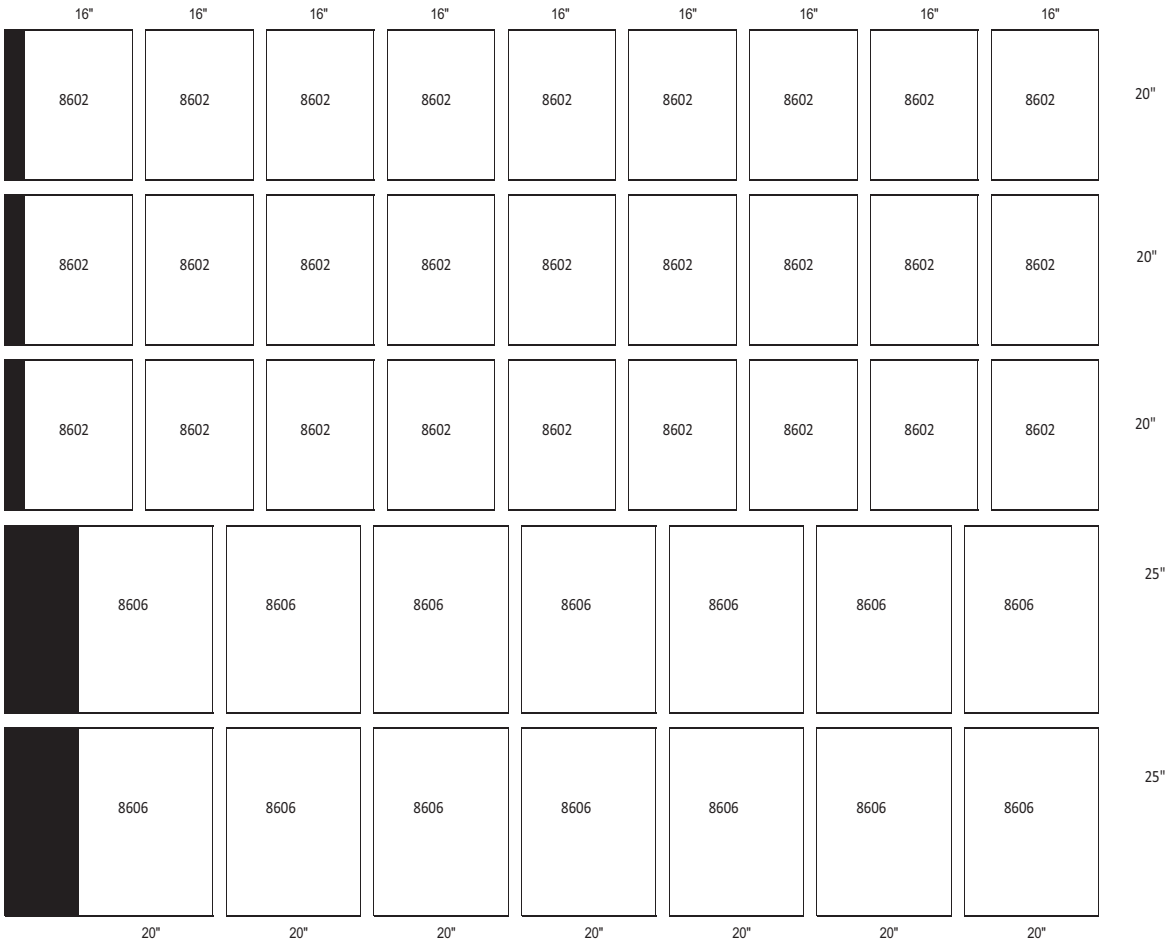

UNIT SIZE: 110W
(27) 20" X 16" FILTER
(14) 20" X 25" FILTER

Shaded area represents filter section blankoff.

Fig. 213 — Flat Filter Arrangement — 2-in. or 4-in. (cont)

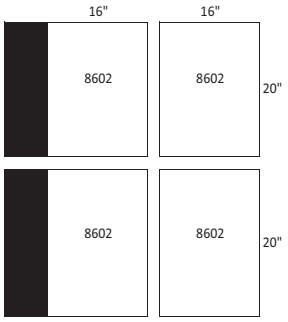

UNIT SIZE: 7T/9T
(4) 20" X 16" FILTERS

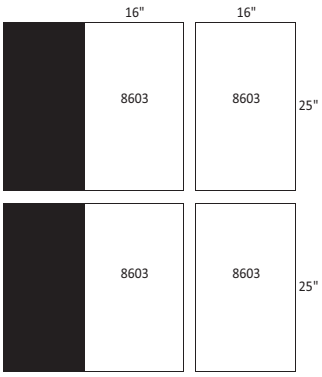

UNIT SIZE: 11T
(4) 25" X 16" FILTERS

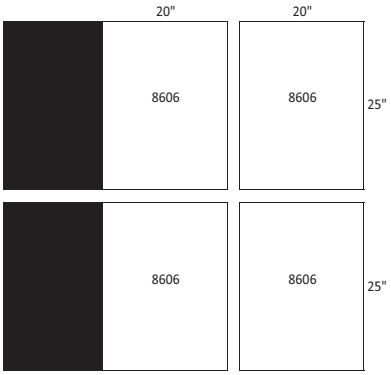

UNIT SIZE: 12T
(4) 25" X 20" FILTERS

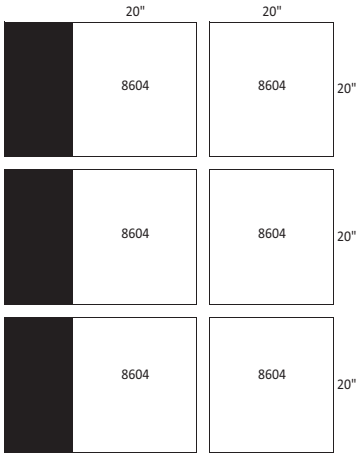

UNIT SIZE: 16T
(6) 20" X 20" FILTERS

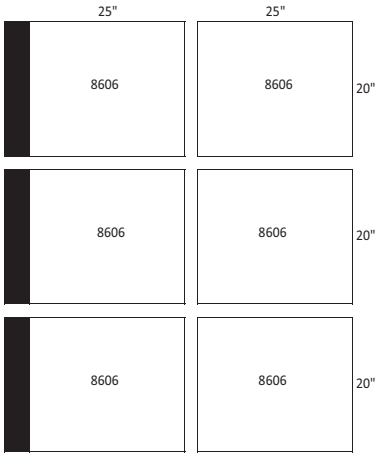

UNIT SIZE: 18T
(6) 20" X 25" FILTERS

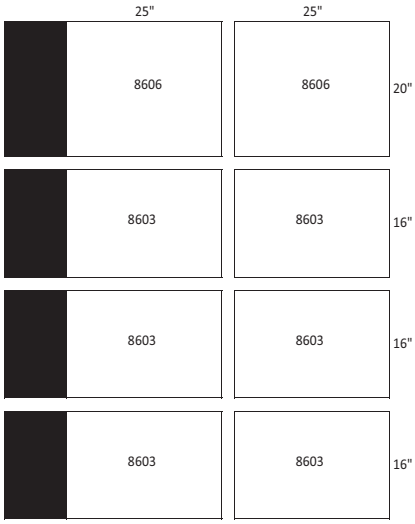

UNIT SIZE: 22T
(2) 20" X 25" FILTERS
(6) 16" X 25" FILTERS

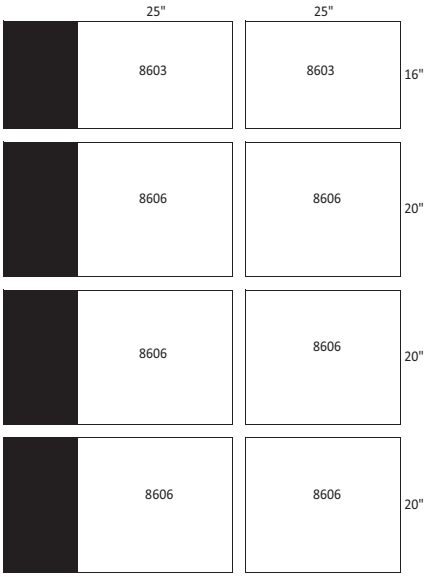

UNIT SIZE: 25T
(2) 16" X 25" FILTERS
(6) 20" X 25" FILTERS

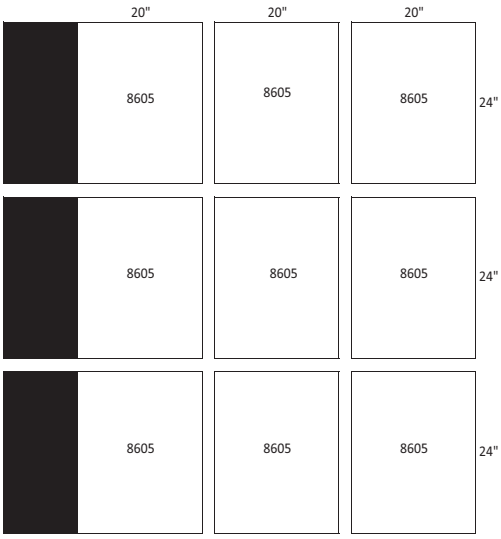

UNIT SIZE: 30T
(9) 24" X 20" FILTERS

Shaded area represents filter section blankoff.

Fig. 213 — Flat Filter Arrangement — 2-in. or 4-in. (cont)

UNIT SIZE: 35T
(3) 16" X 25" FILTERS
(9) 20" X 25" FILTERS

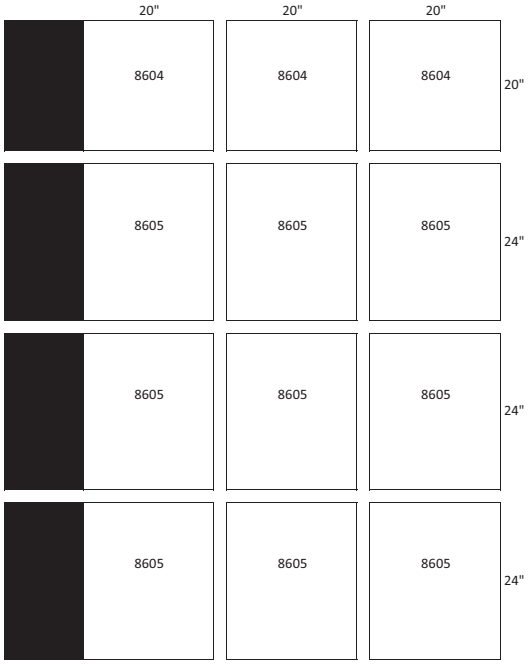

UNIT SIZE: 37T
(9) 24" X 20" FILTERS
(3) 20" X 20" FILTERS

UNIT SIZE: 42T
(9) 16" X 25" FILTERS
(6) 20" X 25" FILTERS

UNIT SIZE: 51T
(4) 16" X 20" FILTERS
(12) 25" X 20" FILTERS

Shaded area represents filter section blankoff.

Fig. 213 — Flat Filter Arrangement — 2-in. or 4-in. (cont)

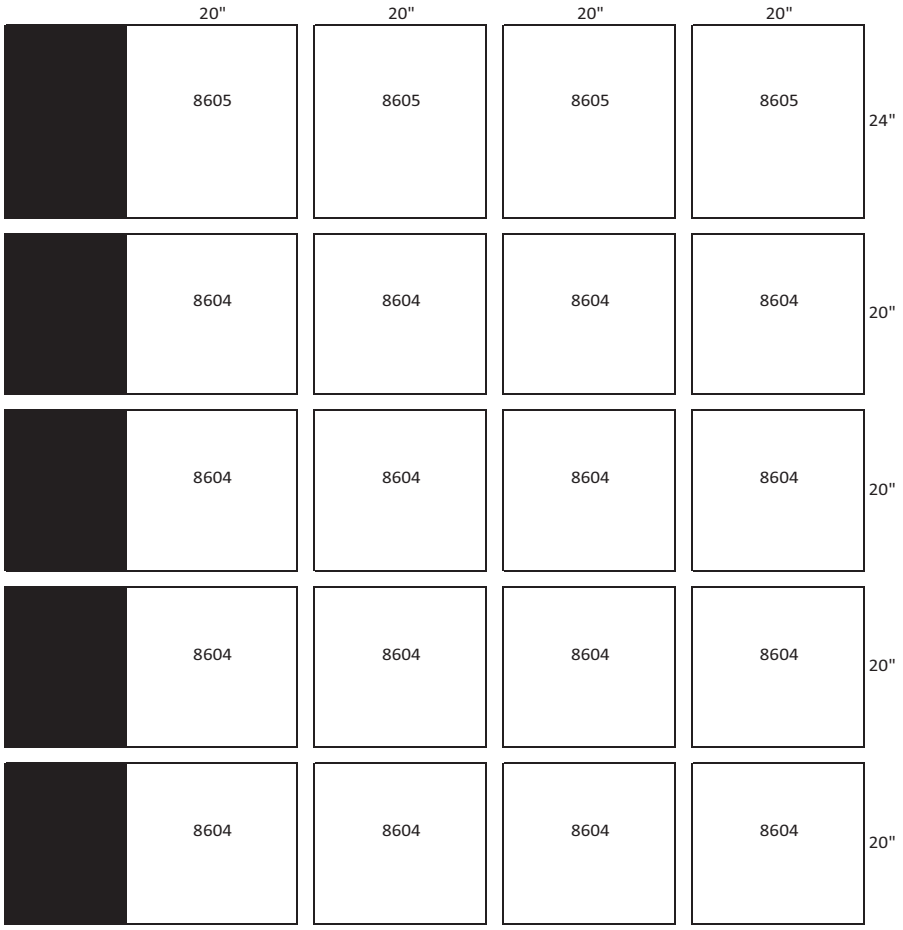

UNIT SIZE: 58T
(4) 24" X 20" FILTERS
(16) 20" X 20" FILTERS

Shaded area represents filter section blankoff.

Fig. 213 — Flat Filter Arrangement — 2-in. or 4-in. (cont)

Shaded area represents filter section blankoff.

Fig. 214 — Filter Mixing Box and Angle Filter Arrangement — 2-in. or 4-in.

UNIT SIZE: 36W
(16) 20" X 25" FILTER

UNIT SIZE: 40W
(24) 16" X 25" FILTER

UNIT SIZE: 50W
(18) 16" X 20" FILTER
(12) 16" X 25" FILTER

Shaded area represents filter section blankoff.

Fig. 214 — Filter Mixing Box and Angle Filter Arrangement — 2-in. or 4-in. (cont)

20"	20"	20"	25"	25"	
8602	8602	8602	8603	8603	16"
8602	8602	8602	8603	8603	16"
8602	8602	8602	8603	8603	16"
8602	8602	8602	8603	8603	16"
8602	8602	8602	8603	8603	16"
8602	8602	8602	8603	8603	16"
8602	8602	8602	8603	8603	16"
8602	8602	8602	8603	8603	16"

UNIT SIZE: 61W
(24) 16" X 20" FILTER
(16) 16" X 25" FILTER

Shaded area represents filter section blankoff.

Fig. 214 — Filter Mixing Box and Angle Filter Arrangement — 2-in. or 4-in. (cont)

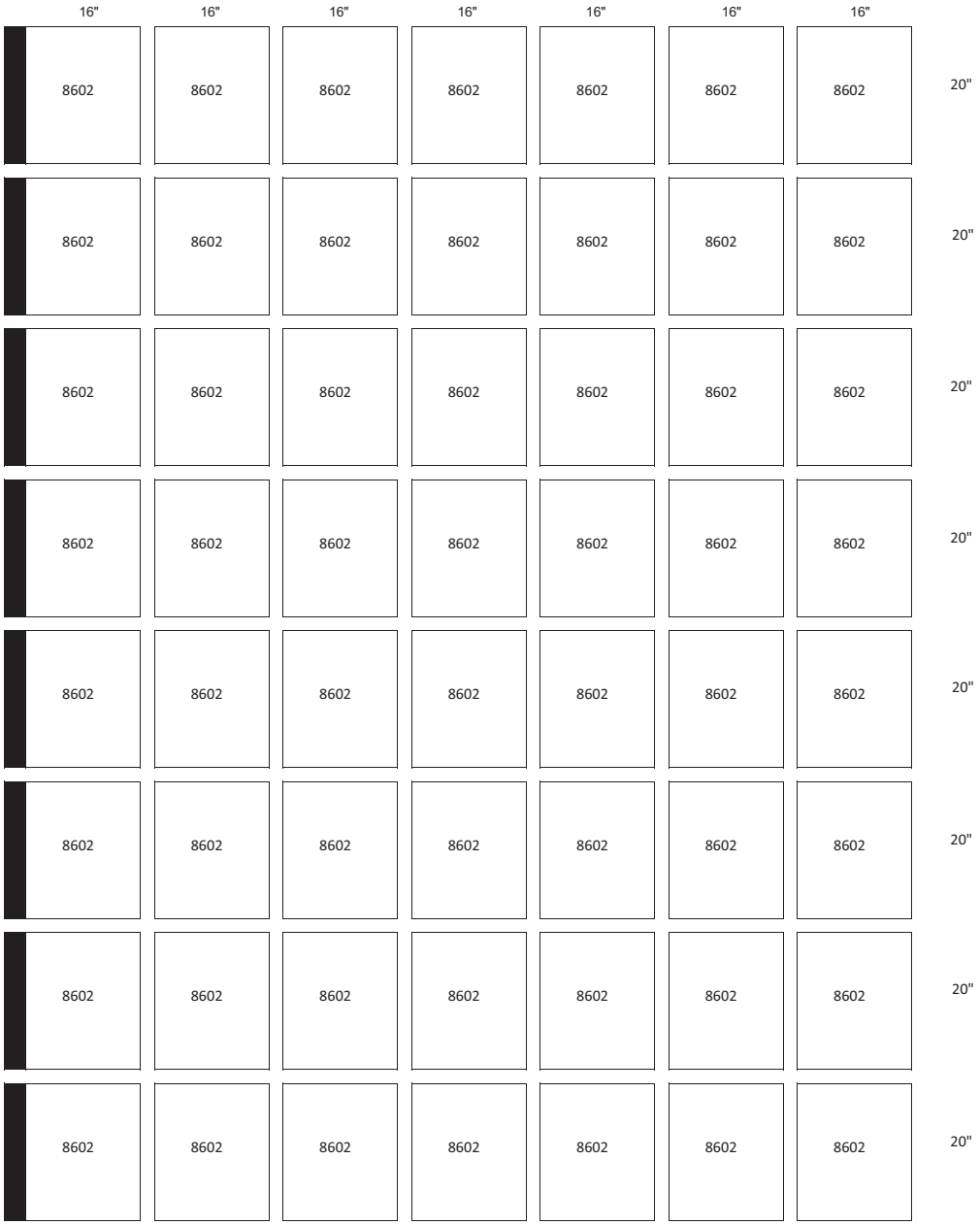

UNIT SIZE: 72W
(56) 16" X 20" FILTER

Shaded area represents filter section blankoff.

Fig. 214 — Filter Mixing Box and Angle Filter Arrangement — 2-in. or 4-in. (cont)

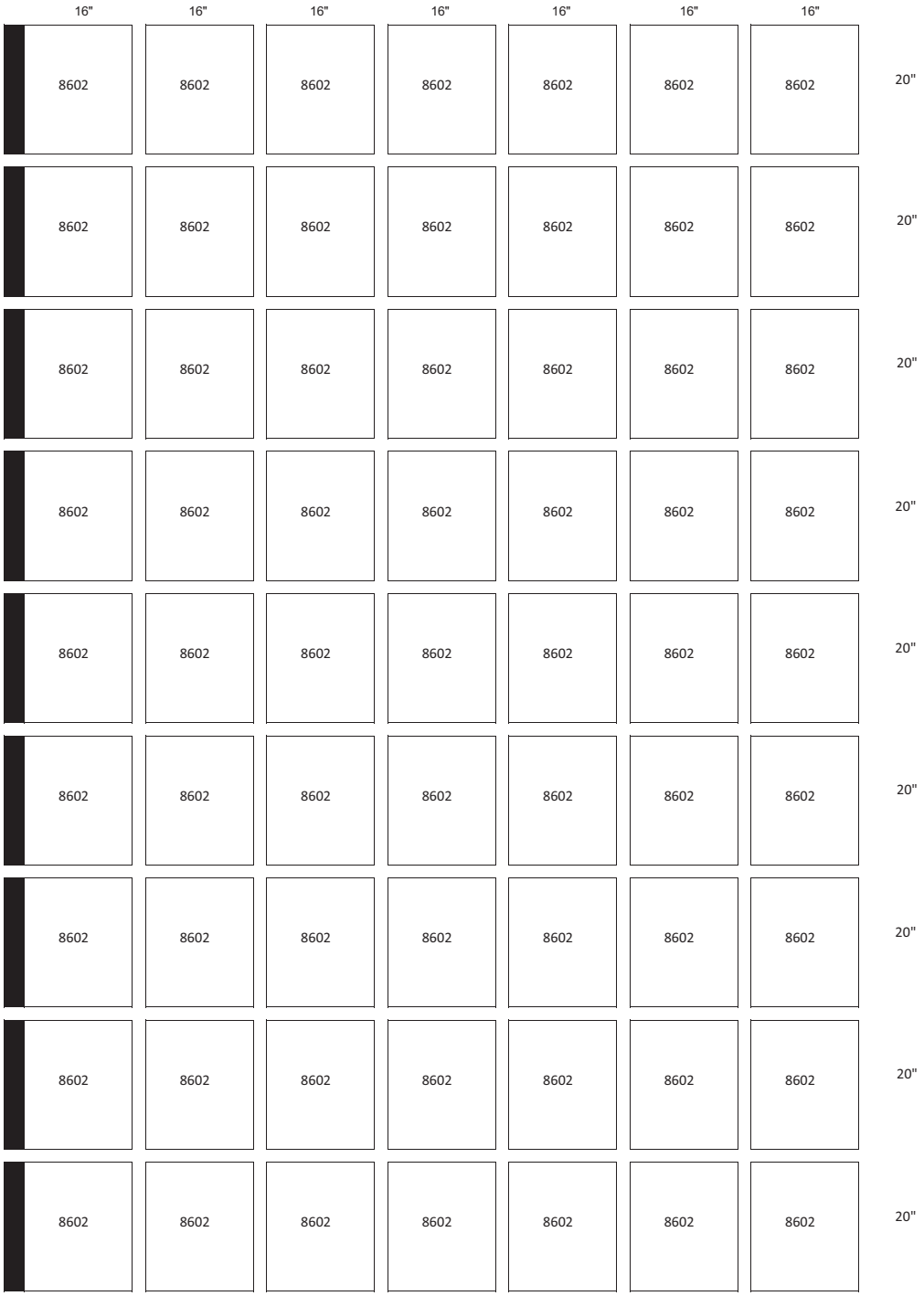

UNIT SIZE: 85W/96W
(63) 16" X 20" FILTER

Shaded area represents filter section blankoff.

Fig. 214 — Filter Mixing Box and Angle Filter Arrangement — 2-in. or 4-in. (cont)

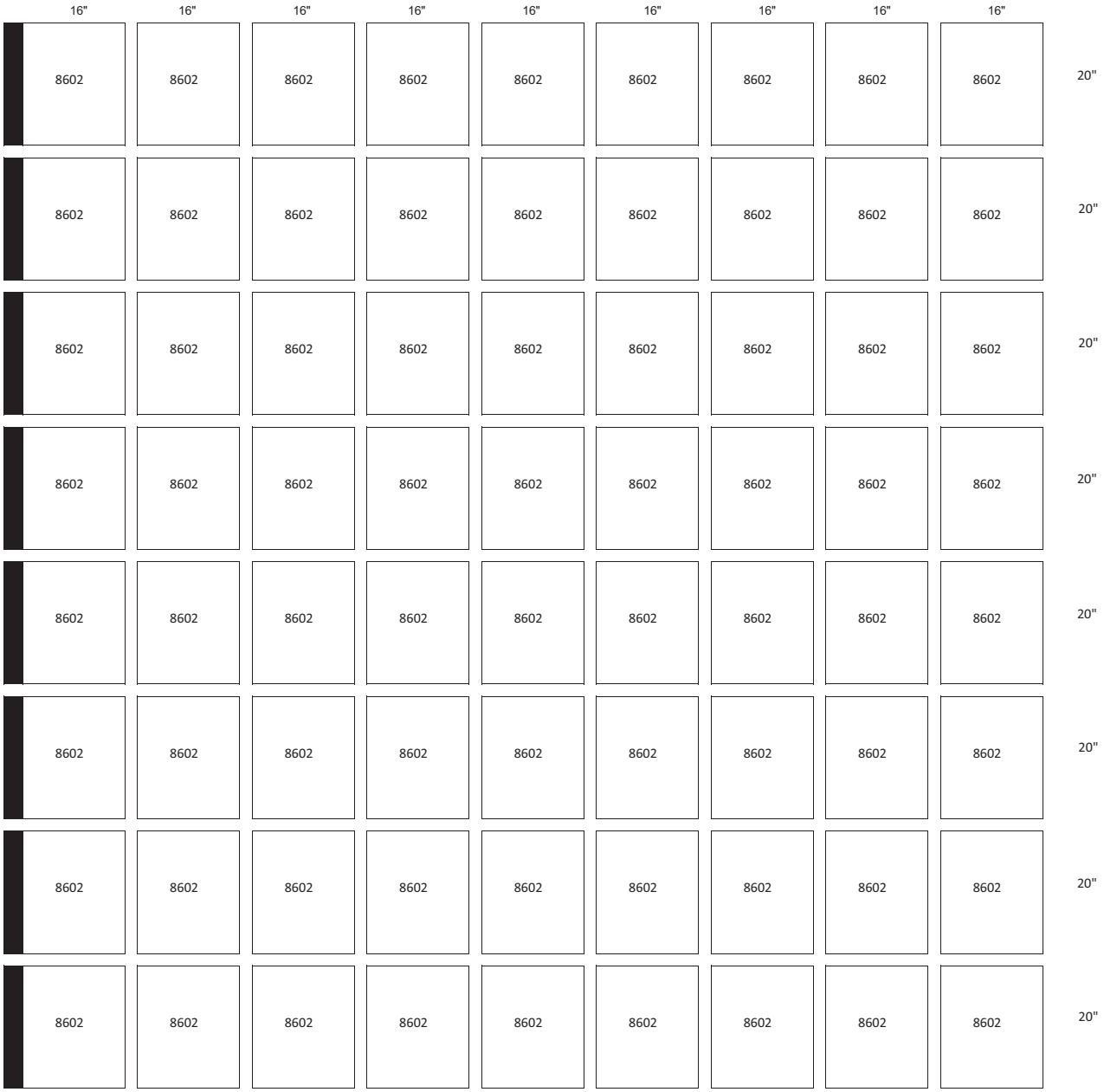

UNIT SIZE: 110W
(72) 16" X 20" FILTER

Shaded area represents filter section blankoff.

Fig. 214 — Filter Mixing Box and Angle Filter Arrangement — 2-in. or 4-in. (cont)

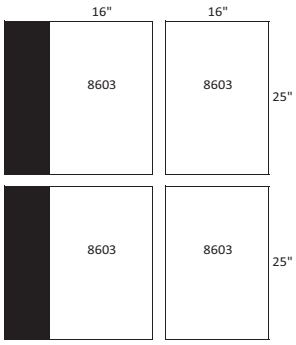

UNIT SIZE: 7T/9T
(4) 25" X 16" FILTERS

UNIT SIZE: 11T/12T
(8) 16" X 20" FILTERS

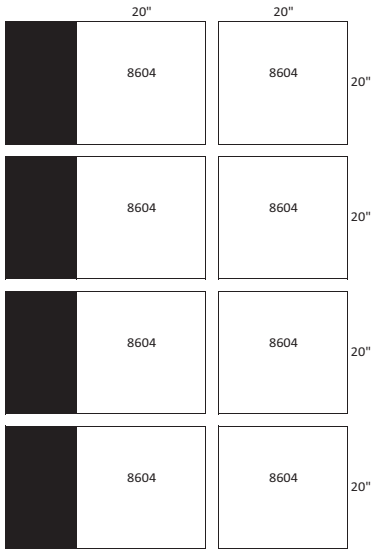

UNIT SIZE: 16T
(8) 20" X 20" FILTERS

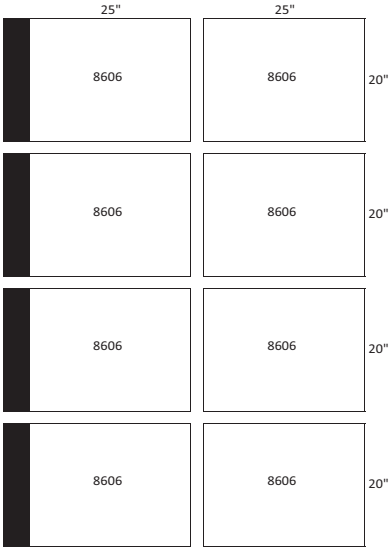

UNIT SIZE: 18T
(8) 20" X 25" FILTERS

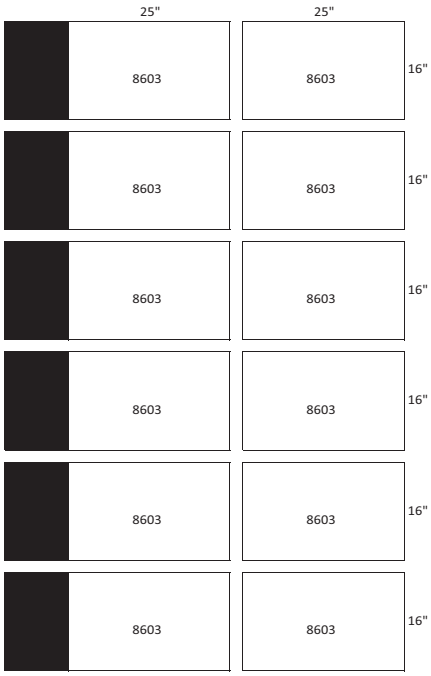

UNIT SIZE: 22T
(12) 16" X 25" FILTERS

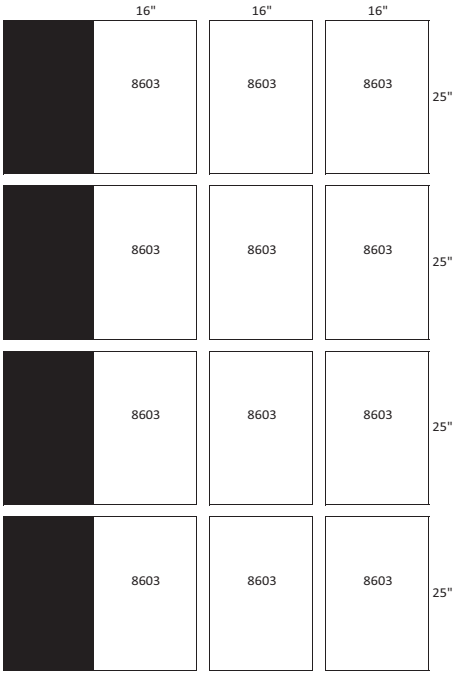

UNIT SIZE: 25T
(12) 25" X 16" FILTERS

Shaded area represents filter section blankoff.

Fig. 214 — Filter Mixing Box and Angle Filter Arrangement — 2-in. or 4-in. (cont)

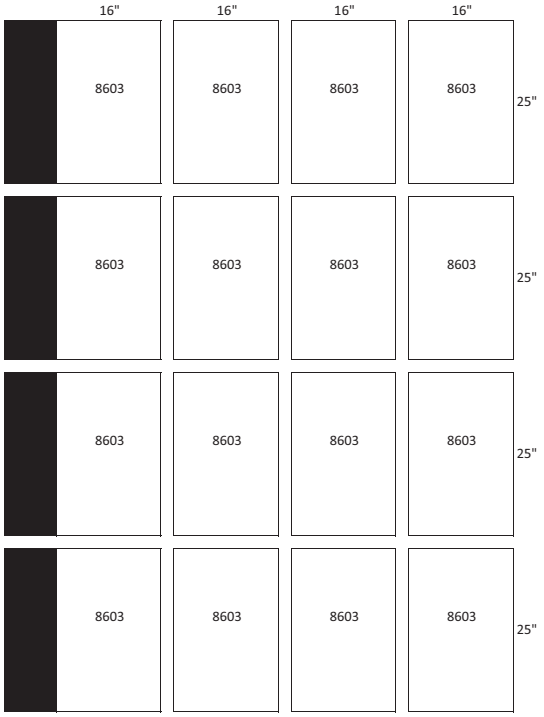

UNIT SIZE: 30T
(16) 25" X 16" FILTERS

UNIT SIZE: 35T
(18) 16" X 25" FILTERS

UNIT SIZE: 37T
(24) 20" X 16" FILTERS

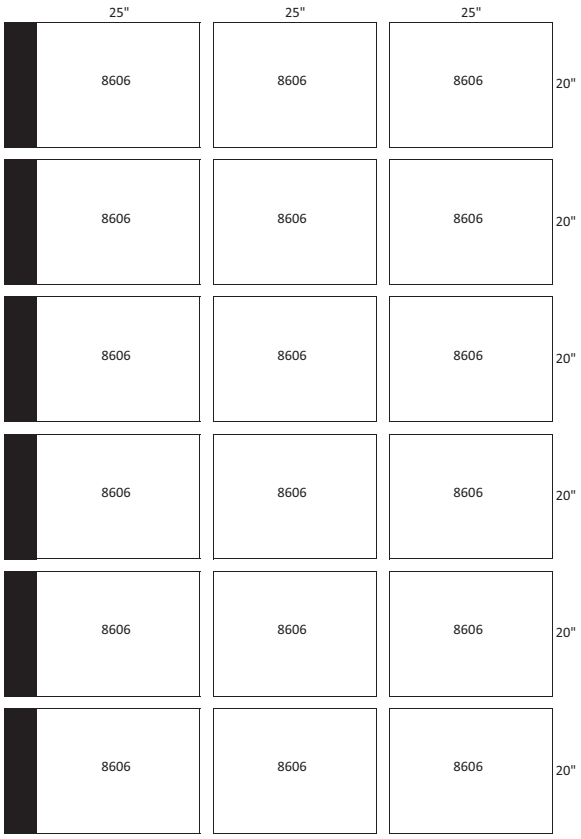

UNIT SIZE: 42T
(18) 20" X 25" FILTERS

Shaded area represents filter section blankoff.

Fig. 214 — Filter Mixing Box and Angle Filter Arrangement — 2-in. or 4-in. (cont)

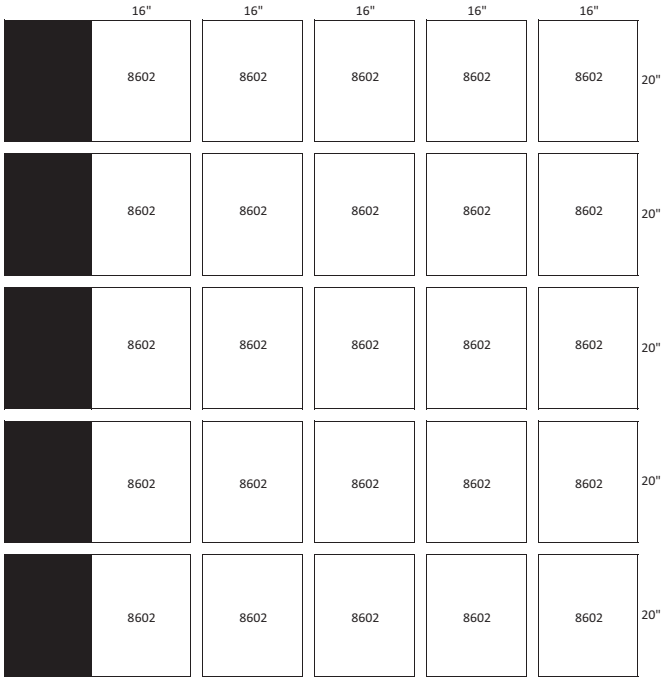

UNIT SIZE: 51T
(30) 20" X 16" FILTERS

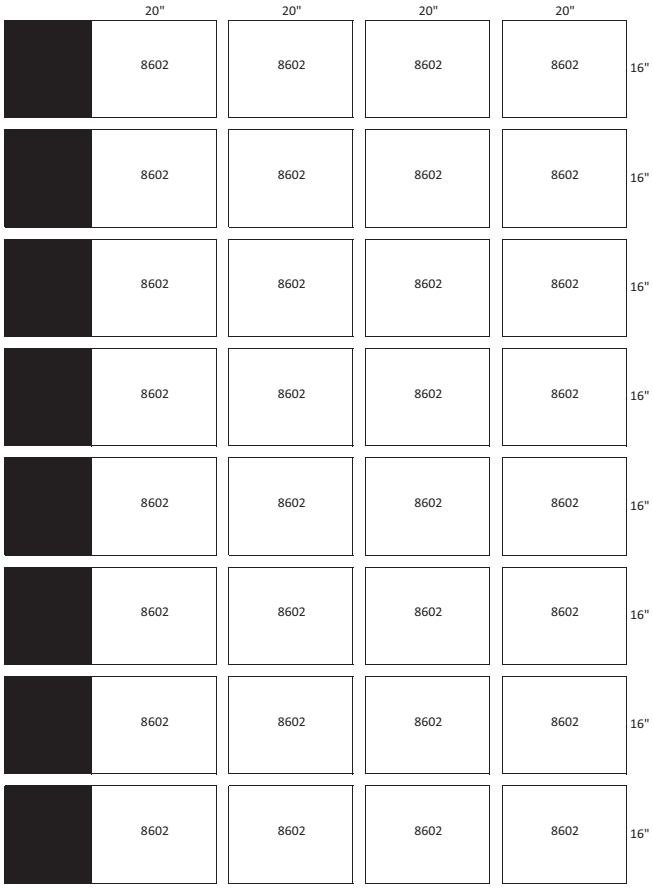

UNIT SIZE:58T
(32) 16" X 20" FILTERS

Shaded area represents filter section blankoff.

Fig. 214 — Filter Mixing Box and Angle Filter Arrangement — 2-in. or 4-in. (cont)

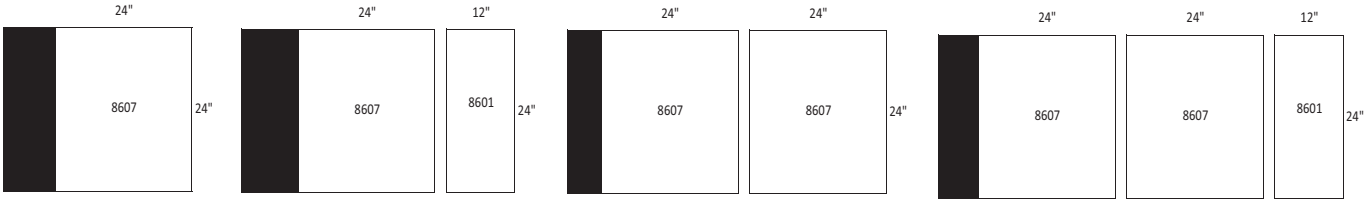

UNIT SIZE: 03W
(1) 24" X 24" FILTER

UNIT SIZE: 06W
(1) 24" X 24" FILTER
(1) 24" X 12" FILTER

UNIT SIZE: 08W
(2) 24" X 24" FILTERS

UNIT SIZE: 10W
(2) 24" X 24" FILTERS
(1) 24" X 12" FILTERS

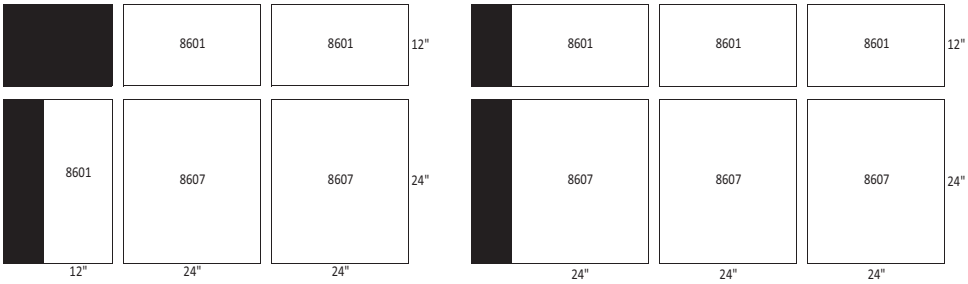

UNIT SIZE: 12W/14W
(2) 24" X 24" FILTERS
(3) 24" X 12" FILTERS

UNIT SIZE: 17W
(3) 24" X 24" FILTER
(3) 24" X 12" FILTER

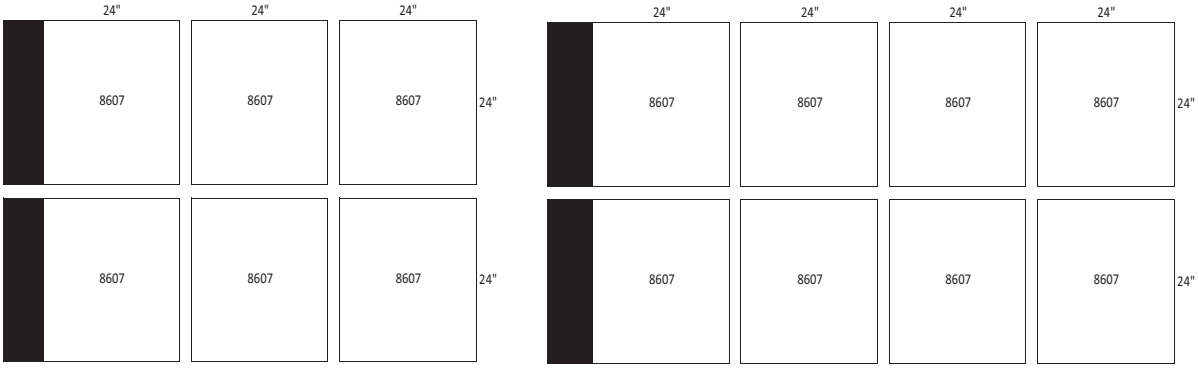

UNIT SIZE: 21W/25W
(6) 24" X 24" FILTER

UNIT SIZE: 30W
(8) 24" X 24" FILTER

UNIT SIZE: 36W/40W
(4) 12" X 24" FILTERS
(8) 24" X 24" FILTERS

Shaded area represents filter section blankoff.

Fig. 215 — Side Load Bag/Cartridge Filter Arrangement

UNIT SIZE: 50W
(12) 24" X 24" FILTERS
(3) 24" X 12" FILTERS

UNIT SIZE: 61W
(7) 12" X 24" FILTERS
(12) 24" X 24" FILTERS

Shaded area represents filter section blankoff.

Fig. 215 — Side Load Bag/Cartridge Filter Arrangement (cont)

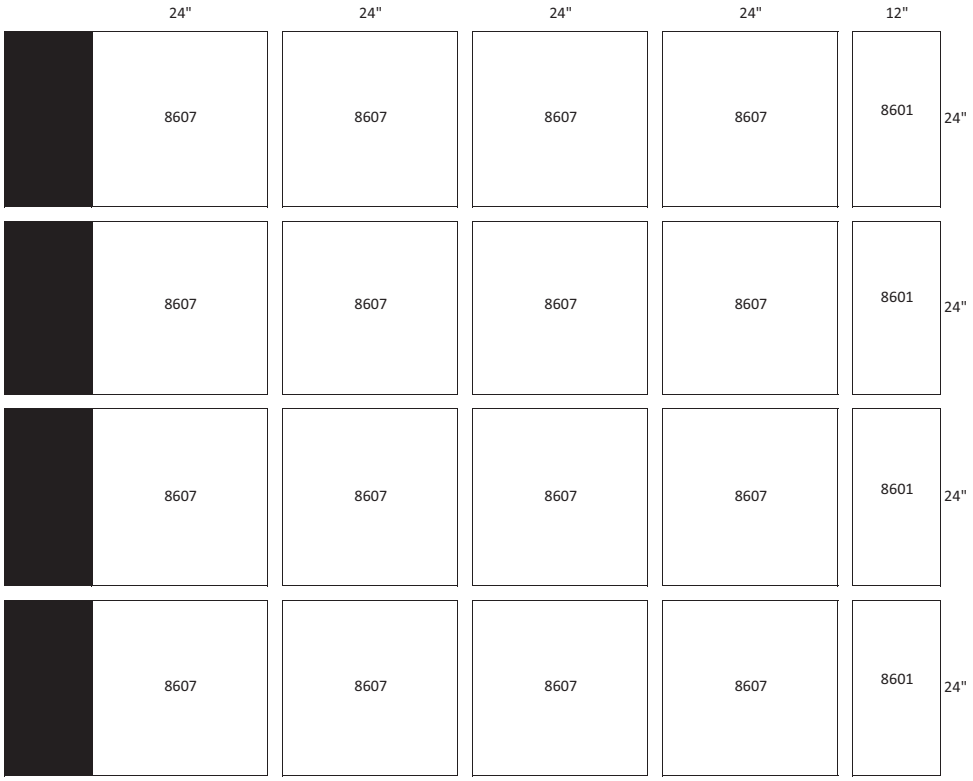

UNIT SIZE: 72W
(16) 24" X 24" FILTERS
(4) 24" X 12" FILTERS

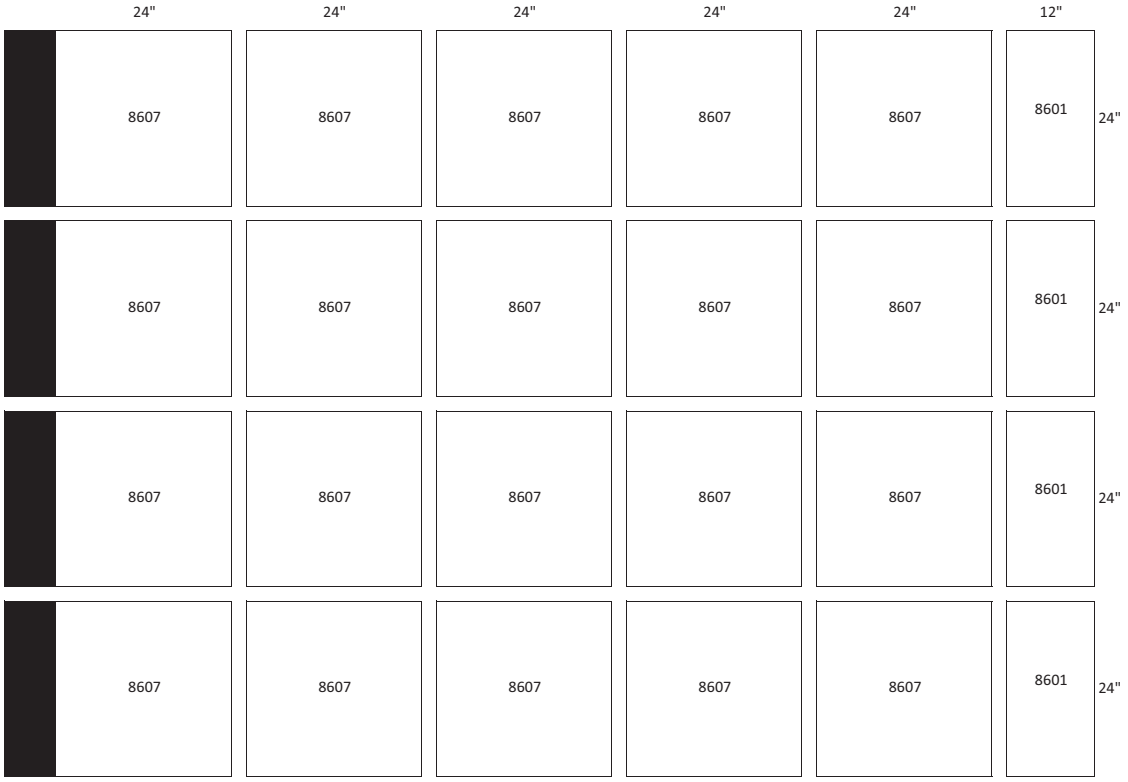

UNIT SIZE: 85W
(20) 24" X 24" FILTERS
(4) 24" X 12" FILTERS

Shaded area represents filter section blankoff.

Fig. 215 — Side Load Bag/Cartridge Filter Arrangement (cont)

UNIT SIZE: 96W
(20) 24" X 24" FILTERS
(9) 24" X 12" FILTERS

UNIT SIZE: 110W
(24) 24" X 24" FILTERS
(6) 24" X 12" FILTERS

Shaded area represents filter section blankoff.

Fig. 215 — Side Load Bag/Cartridge Filter Arrangement (cont)

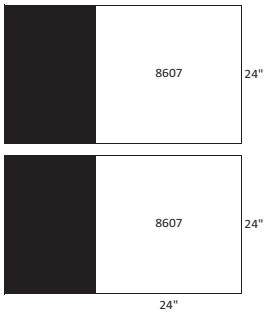

UNIT SIZE: 7T
(2) 24" X 24" FILTERS

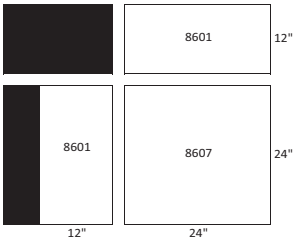

UNIT SIZE: 9T
(1) 24" X 24" FILTER
(2) 12" X 24" FILTERS

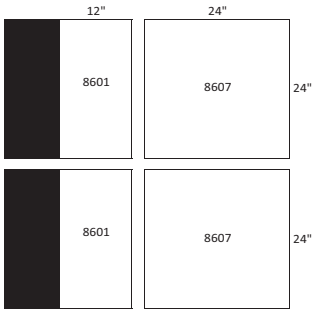

UNIT SIZE: 11T/12T
(2) 24" X 24" FILTERS
(2) 12" X 24" FILTERS

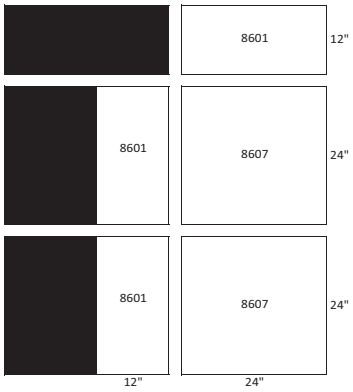

UNIT SIZE: 16T
(2) 24" X 24" FILTERS
(3) 12" X 24" FILTERS

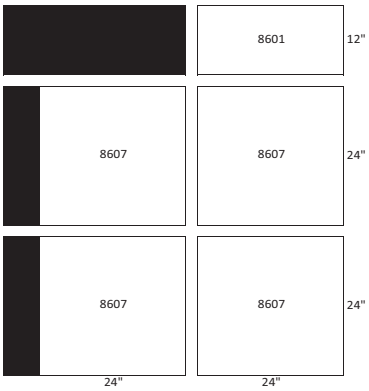

UNIT SIZE: 18T
(4) 24" X 24" FILTERS
(1) 12" X 24" FILTER

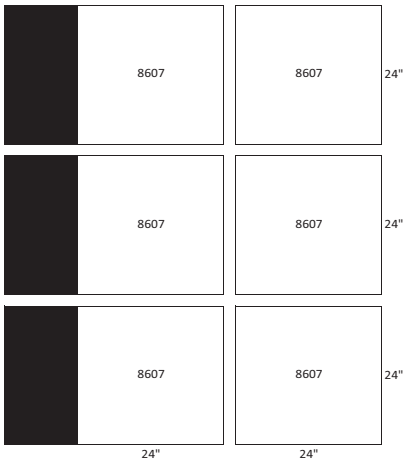

UNIT SIZE: 22T/25T
(6) 24" X 24" FILTERS

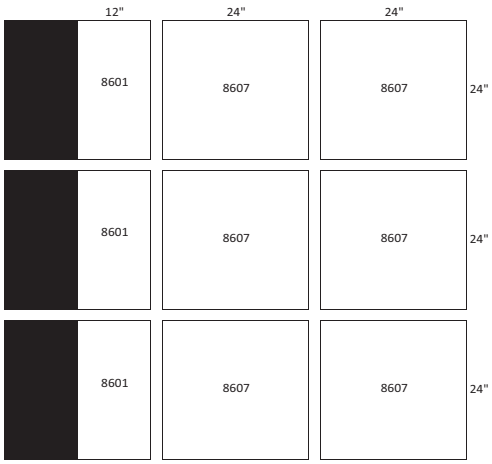

UNIT SIZE: 30T
(6) 24" X 24" FILTERS
(3) 12" X 24" FILTERS

UNIT SIZE: 35T
(9) 24" X 24" FILTERS

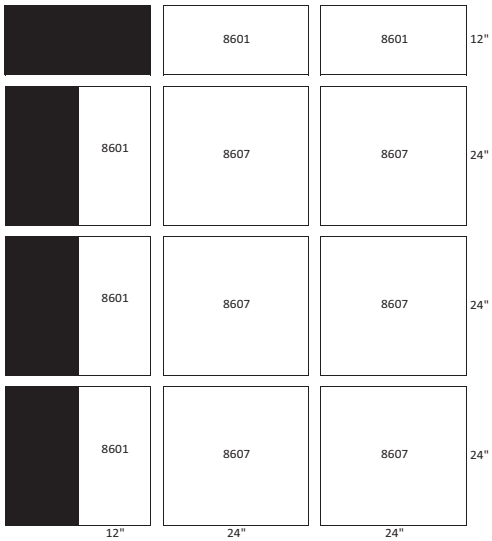

UNIT SIZE: 37T
(6) 24" X 24" FILTERS
(5) 12" X 24" FILTERS

Shaded area represents filter section blankoff.

Fig. 215 — Side Load Bag/Cartridge Filter Arrangement (cont)

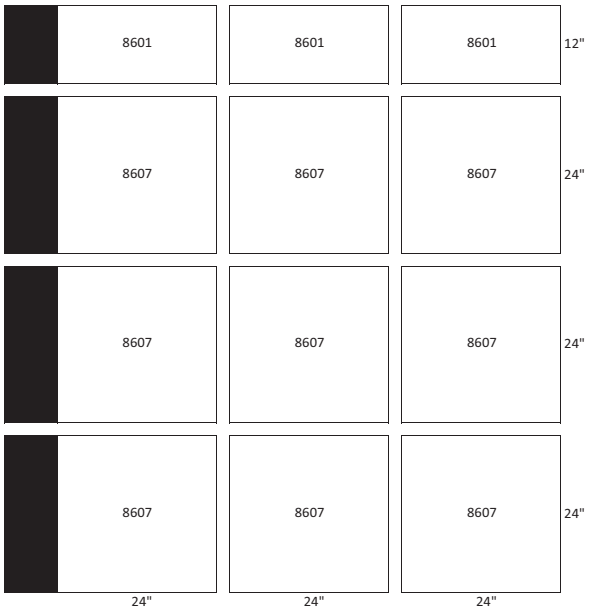

UNIT SIZE: 42T
(9) 24" X 24" FILTERS
(3) 12" X 24" FILTERS

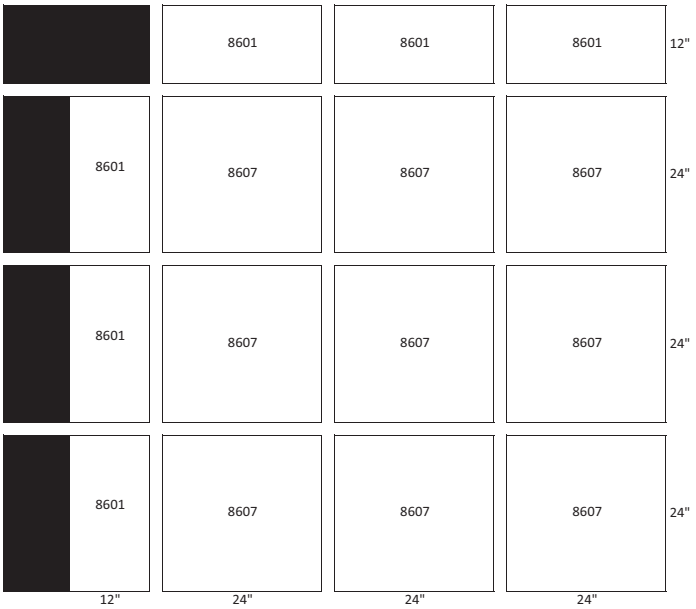

UNIT SIZE: 51T
(9) 24" X 24" FILTERS
(6) 12" X 24" FILTERS

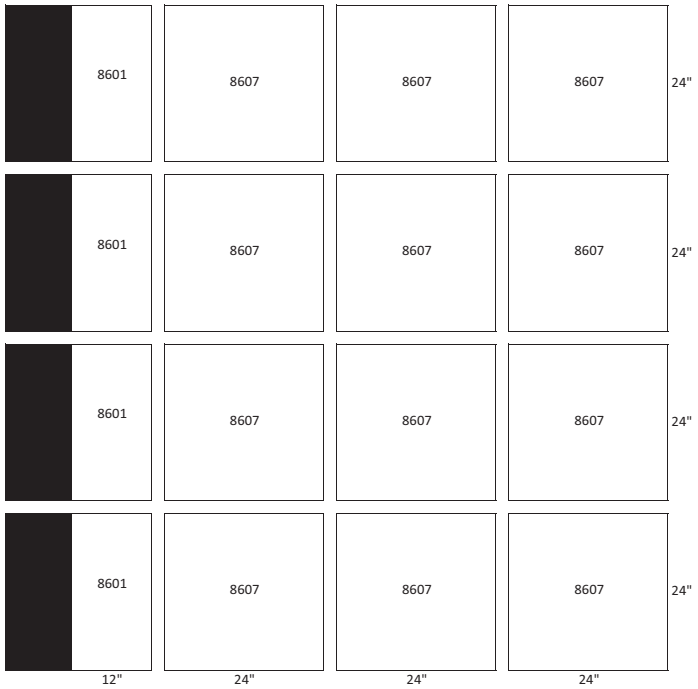

UNIT SIZE: 58T
(12) 24" X 24" FILTERS
(4) 12" X 24" FILTERS

Shaded area represents filter section blankoff.

Fig. 215 — Side Load Bag/Cartridge Filter Arrangement (cont)

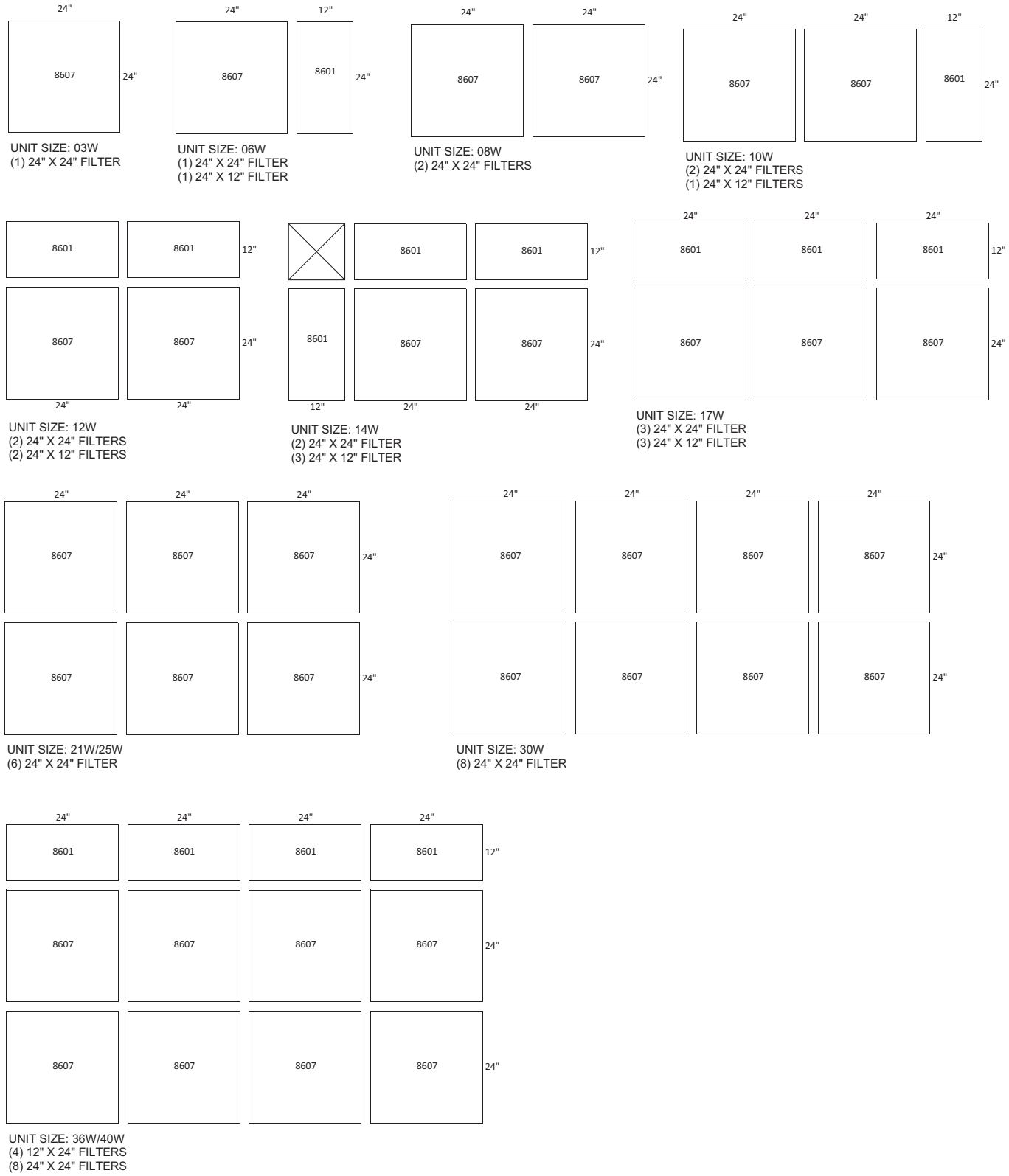

Fig. 216 — Front Load Bag/Cartridge Filter Arrangement

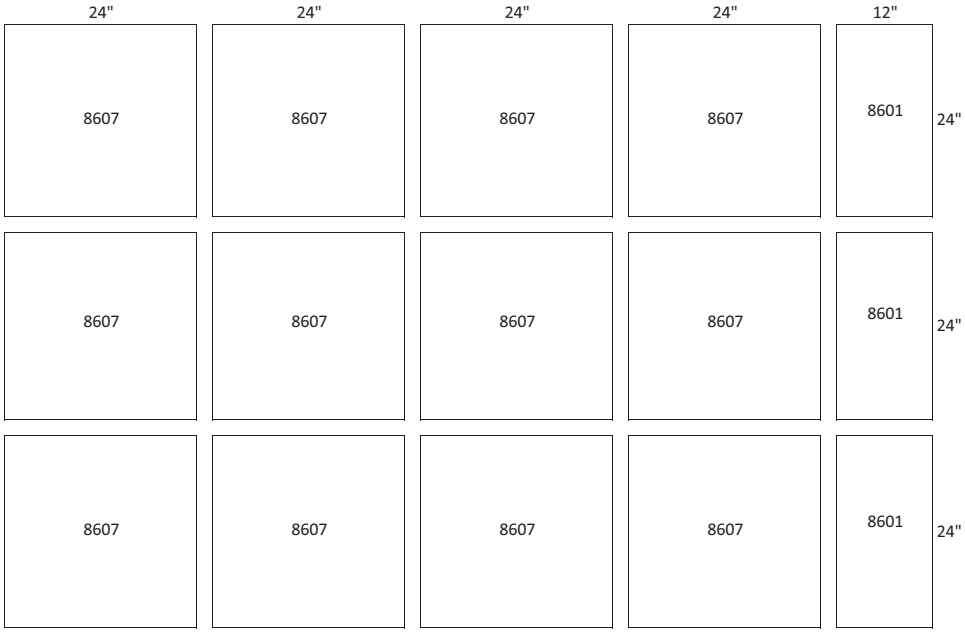

UNIT SIZE: 50W
(12) 24" X 24" FILTERS
(3) 24" X 12" FILTERS

UNIT SIZE: 61W
(7) 12" X 24" FILTERS
(12) 24" X 24" FILTERS

Fig. 216 — Front Load Bag/Cartridge Filter Arrangement (cont)

UNIT SIZE: 72W
(16) 24" X 24" FILTERS
(4) 24" X 12" FILTERS

UNIT SIZE: 85W
(20) 24" X 24" FILTERS
(4) 24" X 12" FILTERS

Fig. 216 — Front Load Bag/Cartridge Filter Arrangement (cont)

UNIT SIZE: 96W
(20) 24" X 24" FILTERS
(9) 24" X 12" FILTERS

UNIT SIZE: 110W
(24) 24" X 24" FILTERS
(6) 24" X 12" FILTERS

Fig. 216 — Front Load Bag/Cartridge Filter Arrangement (cont)

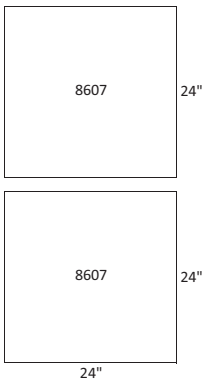

UNIT SIZE: 7T
(2) 24" X 24" FILTERS

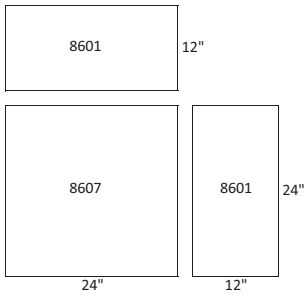

UNIT SIZE: 9T
(1) 24" X 24" FILTER
(2) 12" X 24" FILTERS

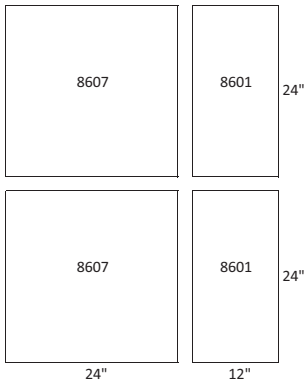

UNIT SIZE: 11T/12T
(2) 24" X 24" FILTERS
(2) 12" X 24" FILTERS

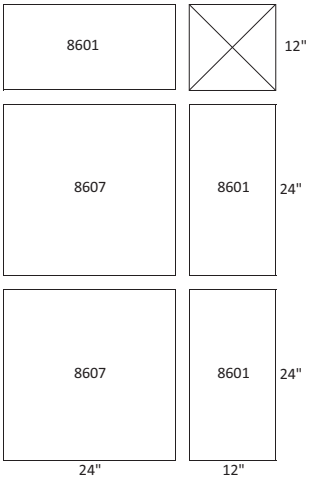

UNIT SIZE: 16T
(2) 24" X 24" FILTERS
(3) 12" X 24" FILTERS

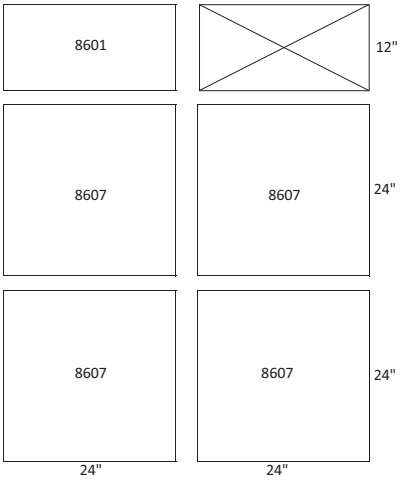

UNIT SIZE: 18T
(4) 24" X 24" FILTERS
(1) 12" X 24" FILTER

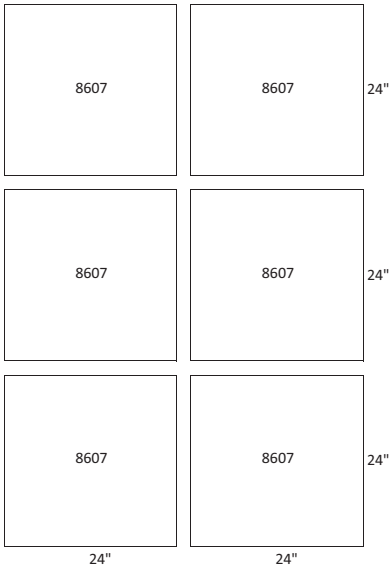

UNIT SIZE: 22T/25T
(6) 24" X 24" FILTERS

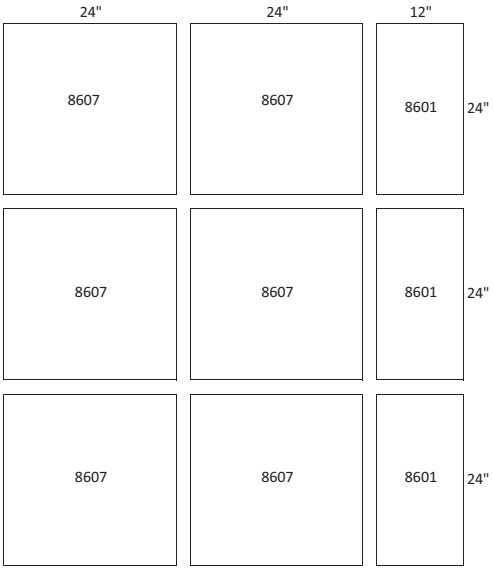

UNIT SIZE: 30T
(6) 24" X 24" FILTERS
(3) 12" X 24" FILTERS

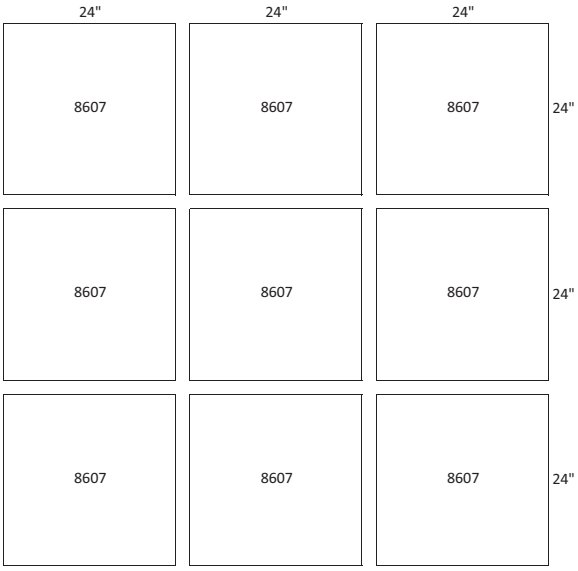

UNIT SIZE: 35T
(9) 24" X 24" FILTERS

Fig. 216 — Front Load Bag/Cartridge Filter Arrangement (cont)

UNIT SIZE: 37T
(8) 24" X 24" FILTERS
(4) 12" X 24" FILTERS

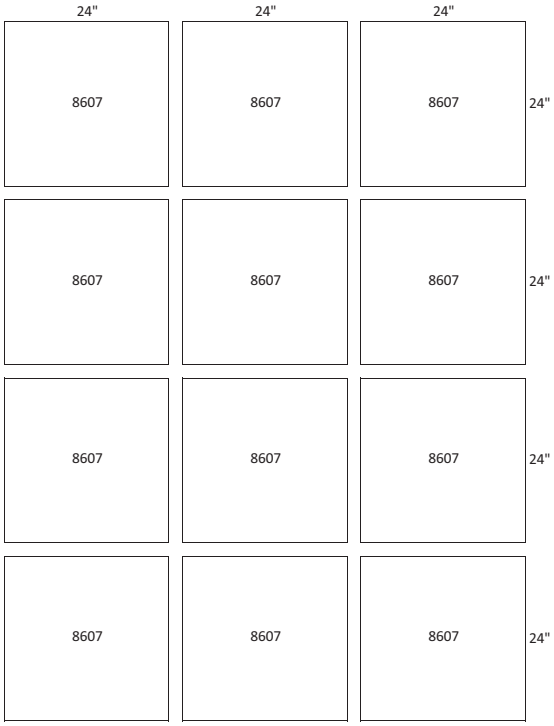

UNIT SIZE: 42T
(12) 24" X 24" FILTERS

UNIT SIZE 51T
(12) 24" X 24" FILTERS
(4) 12" X 24" FILTERS

UNIT SIZE: 58T
(12) 24" X 24" FILTERS
(7) 12" X 24" FILTERS

Fig. 216 — Front Load Bag/Cartridge Filter Arrangement (cont)

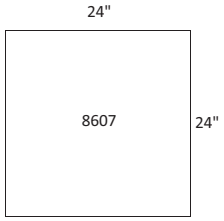

UNIT SIZE: 03W
(1) 24" X 24" FILTER

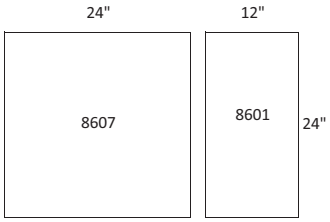

UNIT SIZE: 06W
(1) 24" X 24" FILTER
(1) 24" X 12" FILTER

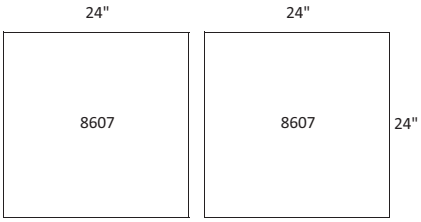

UNIT SIZE: 08W
(2) 24" X 24" FILTERS

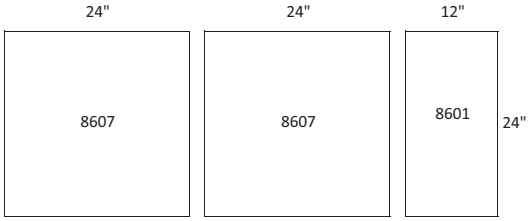

UNIT SIZE: 10W
(2) 24" X 24" FILTERS
(1) 24" X 12" FILTERS

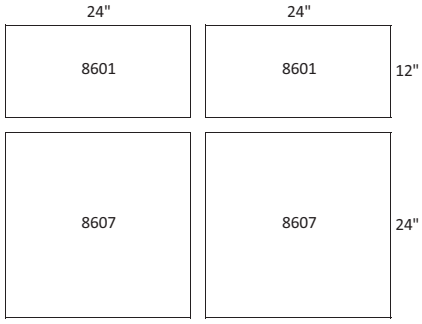

UNIT SIZE: 12W
(2) 24" X 24" FILTERS
(2) 24" X 12" FILTERS

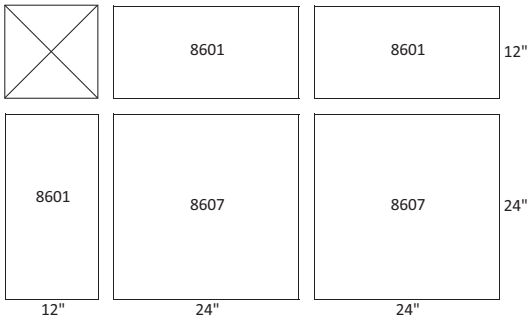

UNIT SIZE: 14W
(2) 24" X 24" FILTER
(3) 24" X 12" FILTER

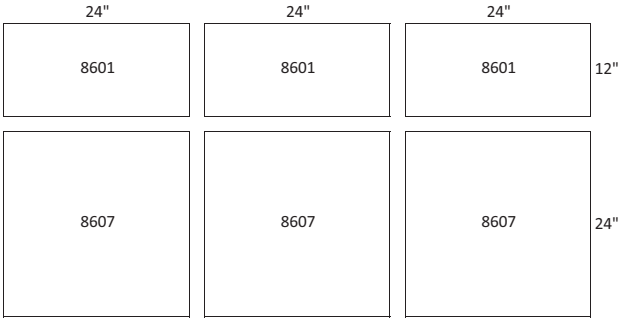

UNIT SIZE: 17W
(3) 24" X 24" FILTER
(3) 24" X 12" FILTER

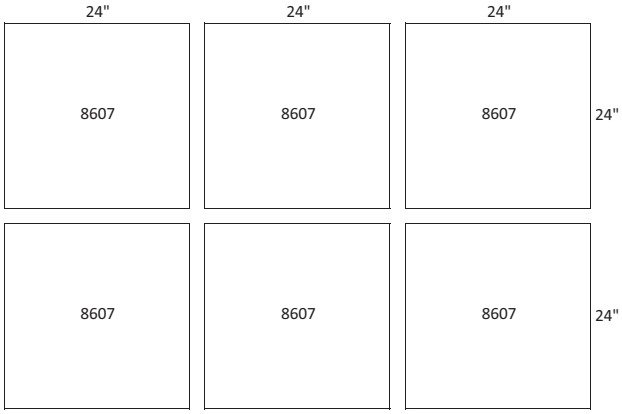

UNIT SIZE: 21W
(6) 24" X 24" FILTER

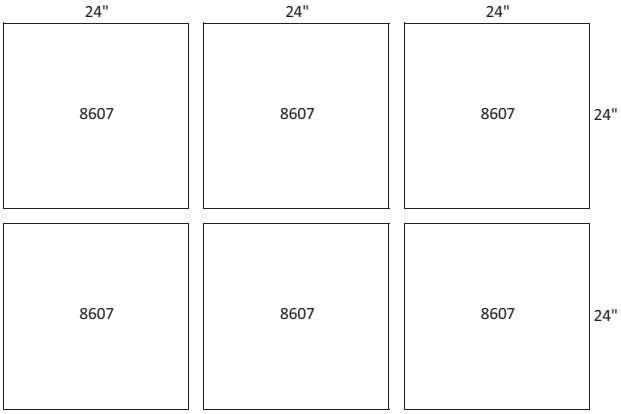

UNIT SIZE: 25W
(6) 24" X 24" FILTER

Fig. 217 — HEPA Filter Arrangement

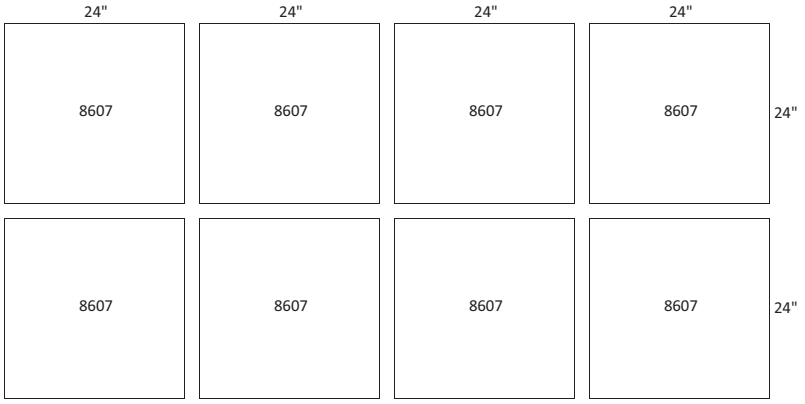

UNIT SIZE: 30W
(8) 24" X 24" FILTER

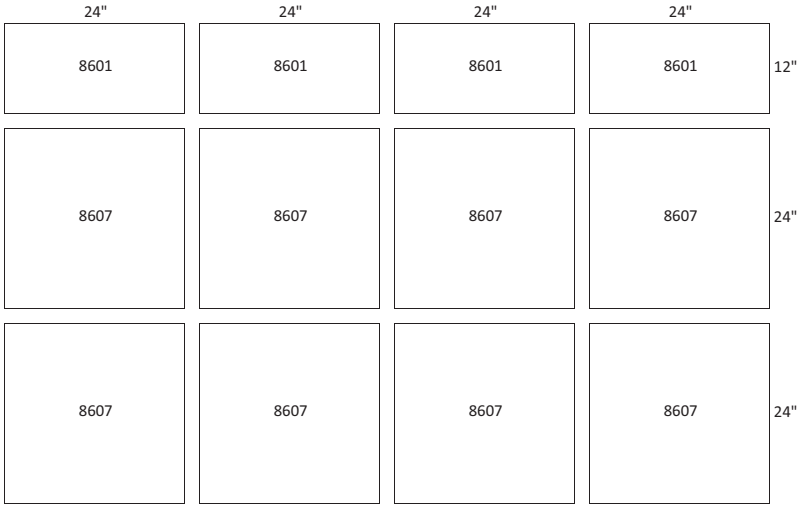

UNIT SIZE: 36W/40W
(4) 12" X 24" FILTERS
(8) 24" X 24" FILTERS

UNIT SIZE: 50W
(12) 24" X 24" FILTERS
(3) 24" X 12" FILTERS

Fig. 217 — HEPA Filter Arrangement (cont)

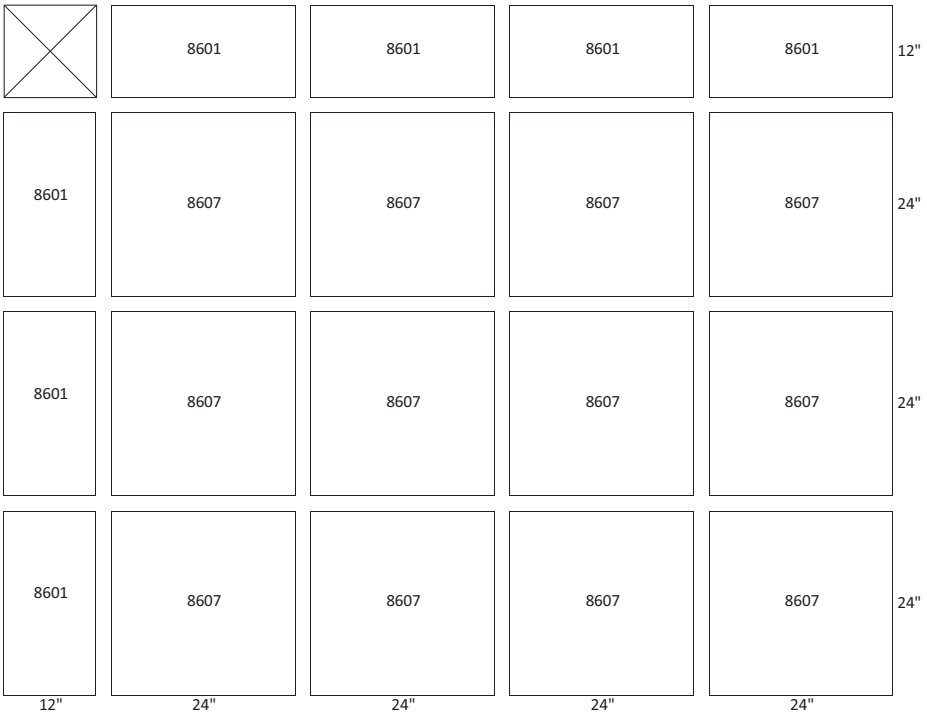

UNIT SIZE: 61W
(7) 12" X 24" FILTERS
(12) 24" X 24" FILTERS

UNIT SIZE: 72W
(16) 24" X 24" FILTERS
(4) 24" X 12" FILTERS

Fig. 217 — HEPA Filter Arrangement (cont)

UNIT SIZE: 85W
(20) 24" X 24" FILTERS

Fig. 217 — HEPA Filter Arrangement (cont)

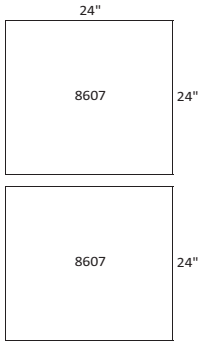

UNIT SIZE: 7T
(2) 24" X 24" FILTERS

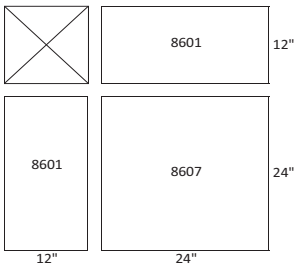

UNIT SIZE: 9T
(1) 24" X 24" FILTER
(2) 12" X 24" FILTERS

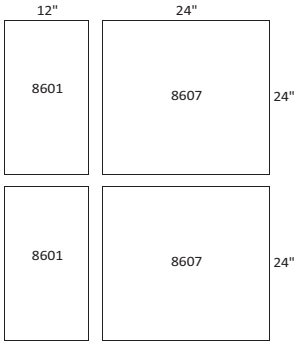

UNIT SIZE: 11T/12T
(2) 24" X 24" FILTERS
(2) 12" X 24" FILTERS

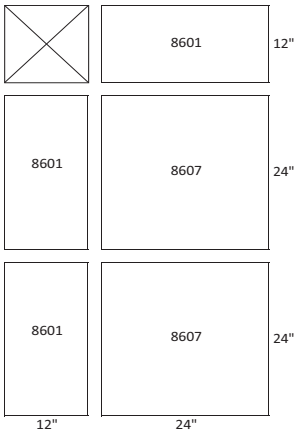

UNIT SIZE: 16T
(2) 24" X 24" FILTERS
(3) 12" X 24" FILTERS

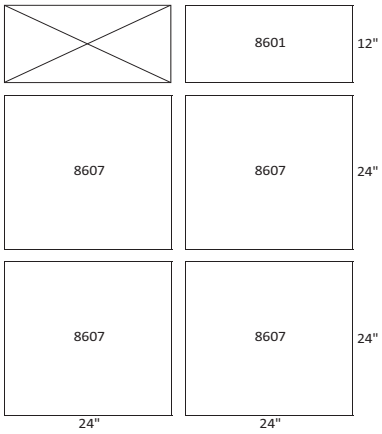

UNIT SIZE: 18T
(4) 24" X 24" FILTERS
(1) 12" X 24" FILTER

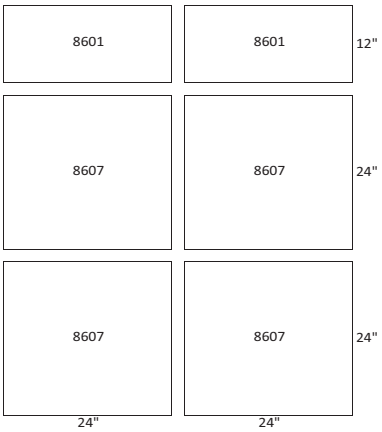

UNIT SIZE: 22T
(4) 24" X 24" FILTERS
(2) 12" X 24" FILTERS

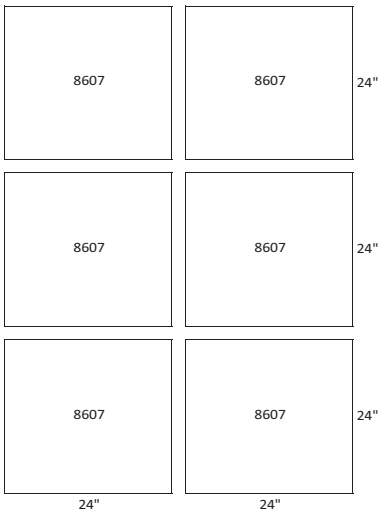

UNIT SIZE: 25T
(6) 24" X 24" FILTERS

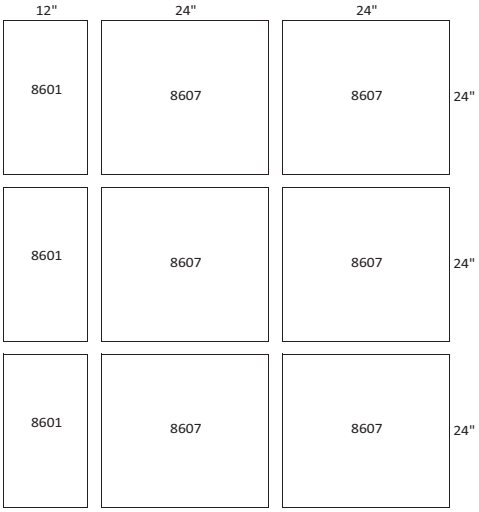

UNIT SIZE: 30T
(6) 24" X 24" FILTERS
(3) 12" X 24" FILTERS

Fig. 217 — HEPA Filter Arrangement (cont)

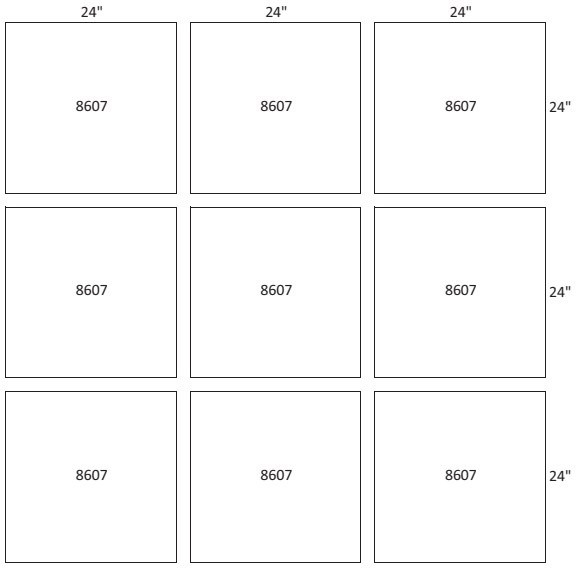

UNIT SIZE: 35T
(9) 24" X 24" FILTERS

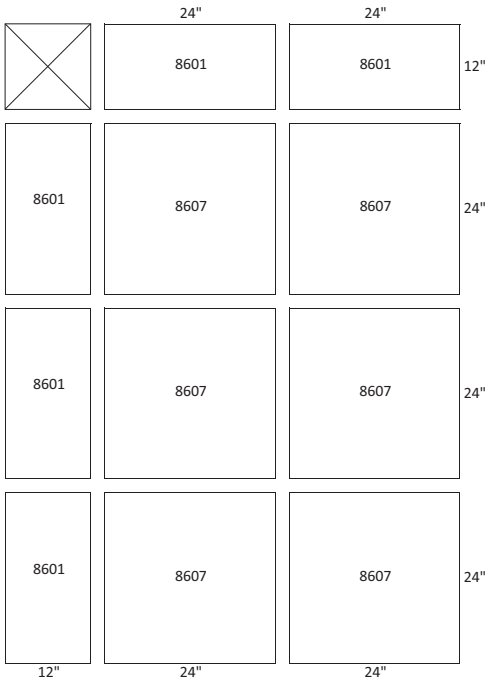

UNIT SIZE: 37T
(6) 24" X 24" FILTERS
(5) 12" X 24" FILTERS

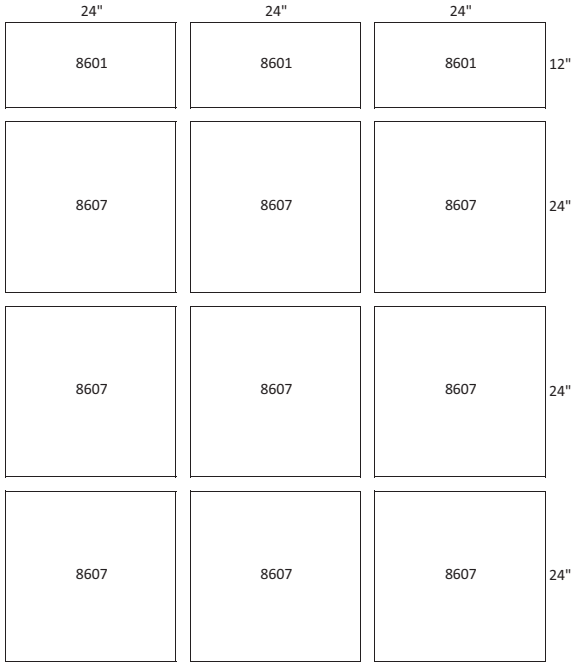

UNIT SIZE: 42T
(9) 24" X 24" FILTERS
(3) 12" X 24" FILTERS

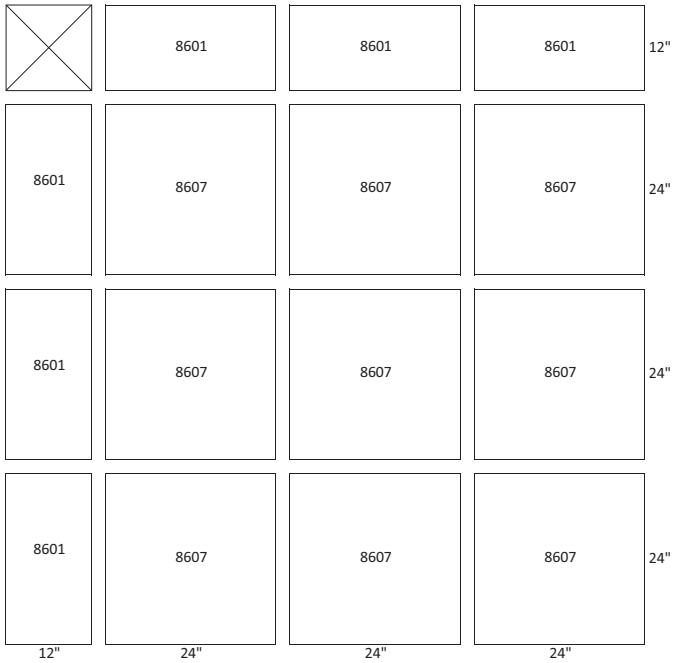

UNIT SIZE: 51T
(9) 24" X 24" FILTERS
(6) 12" X 24" FILTERS

Fig. 217 — HEPA Filter Arrangement (cont)

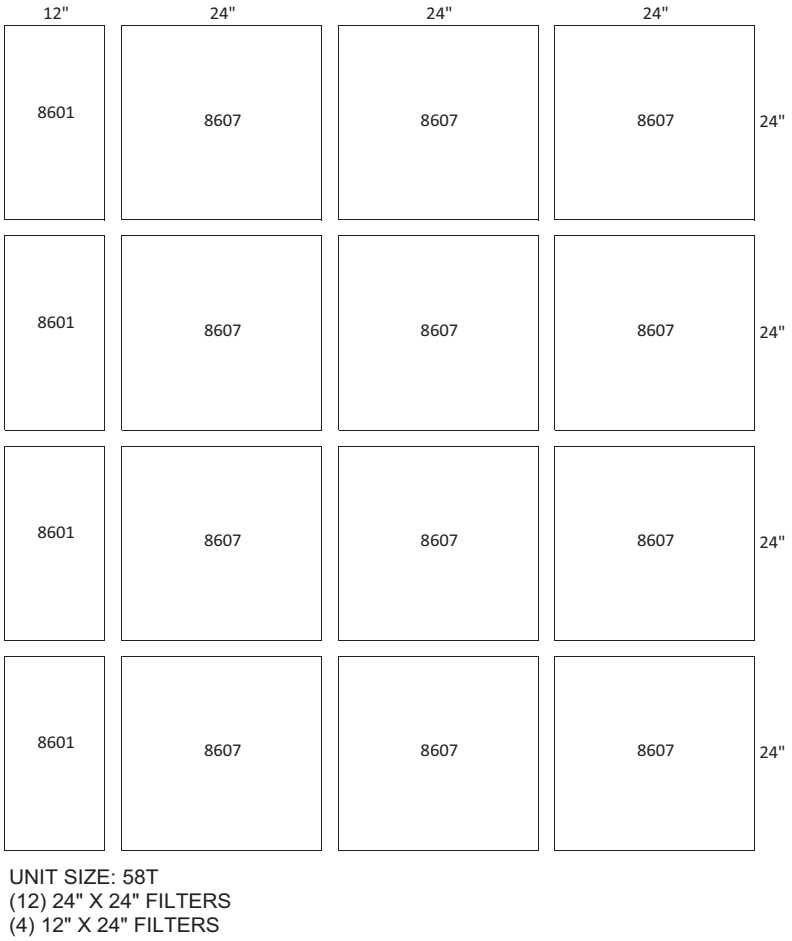

Fig. 217 — HEPA Filter Arrangement (cont)

Fan and Shaft Removal

On airfoil fans, the fan wheel and shaft may be removed through inlet side of fan housing. See Fig. 218. Proceed as follows.

1. Remove drive belts as described in Fan Shaft Bearing Removal section (page 236).
2. Block up fan wheel within housing to prevent dropping when bearing bolts are removed.
3. Loosen bearing holddown bolts, block shaft up.
4. Loosen bearing setscrews and locking collar, and remove holddown bolts. On forward-curved fans, remove cut-off plate. Remove fan wheel through discharge opening.

NOTE: To facilitate easy removal of setscrew fastened wheels, sheaves or bearings, remove the setscrew completely. Taking care not to damage threads, insert a flat ended drift or punch, tap lightly and carefully return the material displaced on the shaft by the setscrew to its original place.

5. Remove bearing support channels and inlet ring from one side.
6. Remove fan shaft and fan wheel from unit.
7. Remove fan shaft from fan wheel.
8. Replace shaft and wheel into fan in the reverse order of their removal.
9. Inspect bearings and if serviceable, replace on shaft.
10. For airfoil and forward-curved fans, align fan wheel and shaft assembly in fan scroll. Check cutoff location if wheel failure damaged cutoff plate.
11. Tighten bearing holddown bolts, bearing setscrews, and shaft setscrews.

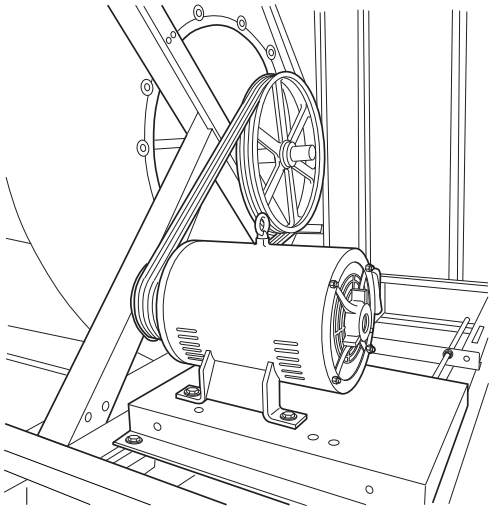

Fig. 218 — Fan Shaft and Bearing Removal

12. Field balancing of shaft and wheel is recommended.

IMPORTANT: Replacement shafts must have a diameter tolerance at bearing mount of +.0000 in./-.001 in. nominal. Carrier specified parts are recommended.

Motor Location

The motor and motor base must be moved to place the motor at the front or rear of unit. The proper location is the one that results in the longest drive centerline distance. The motor may need to be replaced since the conduit box may need to be reversed: The conduit box (if not on top) should always be under the fan shaft for maximum centerline distance and motor adjustment.

INTERNALLY ISOLATED UNIT

When fan discharge is altered the motor is moved, then all isolators must be re-adjusted to assure proper unit isolation.

Rebalancing of the unit is recommended.

Lubrication

MOTORS

Lubricate in accordance with nameplate attached to motor or with manufacturer's recommendations.

BEARINGS

Initial Fan Bearing Lubrication

Most bearings are greased when they are manufactured and will not require additional grease on start-up (verify specific manufacturer's recommendations). Some seepage of grease from the seals is normal during the initial run-in period. For safety purposes, lock out and tag equipment and wipe up any external grease from the bearings.

Monitor bearings after they have been run for several minutes. Check bearings for excessive noise, vibration, and temperature. Typical operating bearing temperature range should be 100°F to 150°F. The initial temperature may be higher than the expected steady state temperature.

Bearing Lubrication Instructions

Lithium or lithium complex base grease, conforming to NLGI (National Lubricating Grease Institute) grade 2 consistency, and an oil viscosity of 455 to 1135 SUS (Saybolt Universal Seconds) at 100°F (100 to 250 cSt [centistokes] at 40°C) may be used for relubrication.

Examples:	Mobil	Mobilith AW2
	Mobil	Mobilux #2
	Shell	Alvania #2
	Texaco	Multifak #2
	Texaco	Premium RB
	Exxon	Unirex N2
	Amoco	Amolith 2

Compatibility of grease is critical; consult with the grease manufacturer and/or supplier for current grease specifications to ensure compatibility.

To lube bearings, use a hand pump grease gun. Always wipe the fitting and grease nozzle clean to avoid introducing contamination into the bearing.

> IMPORTANT: If possible, it is recommended to lubricate the bearing while it is rotating, until grease purge is seen from the seals. If this is not an option due to safety reasons, follow the alternate lubrication procedure below.

For safety, lock out and tag out the fan and restrain rotating components. Add one-half the recommended amount shown in Table 52. Start the fan and run for a few minutes. Stop the fan and lock out and tag out the unit. Add the second half of the recommended amount. A temperature rise after lubrication, sometimes 30°F (17°C), is normal. Bearing should operate at temperatures less than 200°F (94°C) and should not exceed 250°F (121°C) for intermittent operation. For relubrication guidelines, see Table 53.

NOTE: Tables 52 and state general lubrication recommendations based on experience and are intended as suggested or starting points only. For best results, specific applications should be monitored regularly and lubrication intervals and amounts adjusted accordingly.

Table 52 — Recommended Relubrication Grease Charge

SHAFT SIZE (in.)	GREASE CHARGE (oz)
1/2 TO 5/8	0.02
3/4	0.03
13/16 TO 1	0.03
1-1/16 TO 1-1/4 S	0.06
1-1/4 TO 1-7/16	0.09
1-1/2 TO 1-9/16	0.14
1-5/8 TO 1-3/4	0.16
1-13/16 TO 2 S	0.18
2 TO 2-13/16	0.25
2-1/4 TO 2-7/16	0.35
2-1/2 TO 2-11/16	0.46
2-13/16 TO 2-15/16	0.48

LEGEND
S — Smaller Shaft Housing Size

Table 53 — Relubrication Intervals

ENVIRONMENT	TEMPERATURE (F)	SPEED (%)	FREQUENCY
Dirty	-20 to 250	0-100	Daily to 1 week
Clean	-20 to 125	0-25	4 to 10 months
		26-50	1 to 4 months
		51-75	1 week to 1 month
		76-100	Daily to 1 week
	125 to 175	0-25	2 to 6 weeks
		26-50	1 week to 1 month
		51-75	Daily to 1 week
		76-100	Daily to 1 week
	175 to 250	0-100	Daily to 1 week

LEGEND
NLGI — National Lubricating Grease Institute
NOTE: Use NLGI No. 2 Lithium or Lithium Complex Grease.

Motor and Drive Package Data

Tables 5 and 6 give motor data for forward-curved, and airfoil fans.

Variable Frequency Drive

If installed in an appropriate environment, the VFD requires very little maintenance. Table 54 lists the routine maintenance intervals recommended by Carrier.

Table 54 — Maintenance Intervals

MAINTENANCE	INTERVAL
Heat sink temperature check and cleaning	Every 12 Months (More Often If Operating In A Dusty Environment)
Main cooling fan replacement	Every Five Years
Capacitor change (frame size R5 and R6)	Every Ten Years
HVAC control panel battery change	Every Ten Years

HEAT SINK

The heat sink fins accumulate dust from the cooling air. Since a dusty heat sink is less efficient at cooling the drive, over temperature faults become more likely. In a normal environment check the heat sink annually, in a dusty environment check more often.

Check the heat sink as follows (when necessary):

1. Remove power from drive.
2. Remove the cooling fan.
3. Blow clean compressed air (not humid) from bottom to top and simultaneously use a vacuum cleaner at the air

outlet to trap the dust. If there is a risk of the dust entering adjoining equipment, perform the cleaning in another room.

4. Replace the cooling fan.
5. Restore power.

MAIN FAN REPLACEMENT

The main cooling fan of the VFD has a life span of about 60,000 operating hours at maximum rated operating temperature and drive load. The expected life span doubles for each 18°F drop in the fan temperature (fan temperature is a function of ambient temperatures and drive loads).

Fan failure can be predicted by the increasing noise from fan bearings and the gradual rise in the heat sink temperature in spite of heat sink cleaning. If the drive is operated in a critical part of a process, fan replacement is recommended once these symptoms start appearing. Replacement fans are available from Carrier.

To replace the main fan for frame sizes R1 through R4, perform the following (see Fig. 219):

1. Remove power from drive.
2. Remove drive cover.
3. For frame sizes R1 and R2, press together the retaining clips on the fan cover and lift. For frame sizes R3 and R4, press in on the lever located on the left side of the fan mount, and rotate the fan up and out.
4. Disconnect the fan cable.
5. Install the new fan by reversing Steps 2 to 4.
6. Restore power.

To replace the main fan for frame sizes R5 and R6, perform the following (see Fig. 220):

1. Remove power from drive.
2. Remove the screws attaching the fan.
3. Disconnect the fan cable.
4. Install the fan in reverse order.
5. Restore power.

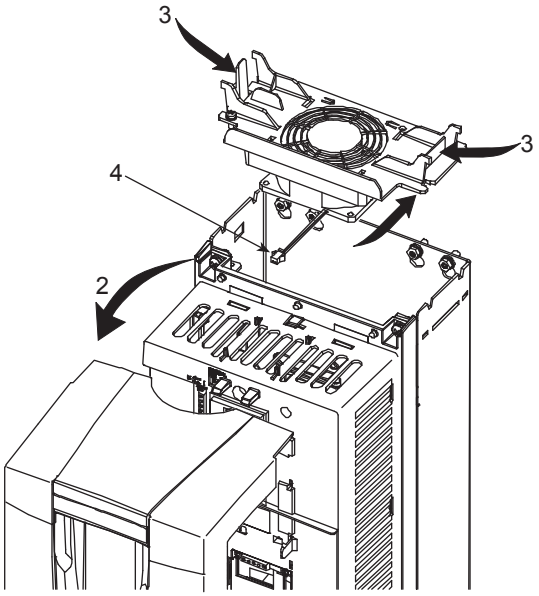

Fig. 219 — Main Fan Replacement (Frame Sizes R1 - R4)

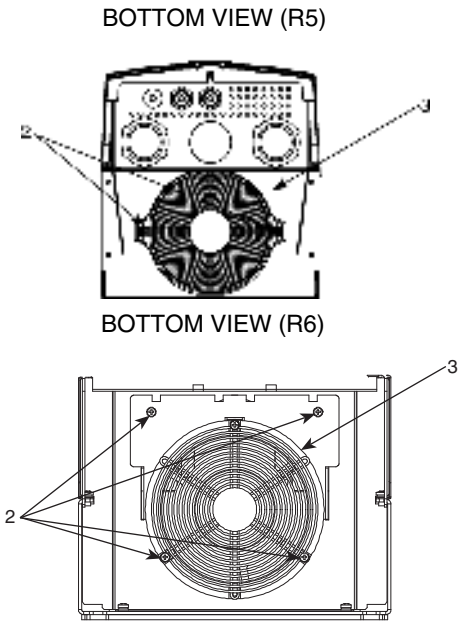

Fig. 220 — Main Fan Replacement (Frame Sizes R5 and R6)

CONTROL PANEL CLEANING

Use a soft damp cloth to clean the control panel. Avoid harsh cleaners which could scratch the display window.

BATTERY REPLACEMENT

A battery is only used in assistant control panels that have the clock function available and enabled. The battery keeps the clock operating in memory during power interruptions. The expected life for the battery is greater than ten years. To remove the battery, use a coin to rotate the battery holder on the back of the control panel. Replace the battery with type CR2032.

TROUBLESHOOTING

Steam Coil Performance Problems

Coil capacity is normally not a problem with steam coils. Low capacity can result from blocked or plugged air side surface, an air bound coil, or a coil which is filled with condensate because of a non-functioning steam trap. The Carrier steam coils with the 1-in. OD outer tube have at least twice the condensate loading capacity of a coil with 5/8 in. OD outer tubes.

Water hammer can damage the coil and cause leaks. It is typically caused by improper piping of the steam supply, allowing condensate to enter the coil with the steam supply; or by accumulation of condensate in the coil which can occur with the coils operating at partial load without a vacuum breaking device.

Problems with temperature control can occur when a thermostatic controller or steam control valve is not functioning properly. Temperature control problems will also occur when the steam controls valve is oversized. Consider 1/3 to 2/3 valve arrangements for full range control.

Problems with “water logging” of the condensate tubes can occur when a coil with over 6-ft tubes is selected at high air velocities, low steam pressures (below 5 psig) and high density fin spacing (9 fins per inch or more). This high density fin spacing, while producing high levels of heating capacity, also promotes excessive condensate. Given the length of the tubes and the low steam supply pressure, condensate can build up faster than the drain system can carry it away. Considerations should be given for using two coils in series for this application.

Steam Failure Modes

The following failure modes could take as little as a weekend to damage a coil, or much longer.

Problems occur quickly in coils using low pressure steam (< 3 psig). Water hammer can develop inside the coil at the header end because the steam has already condensed and the low steam pressure does not adequately clear it from the coil. This condensate re-boils and starts up water hammer inside the tubes. The action of this type of water hammer, which sounds like crackling inside the coil, is many tiny bubbles impinging on the inner and outer tubes. One result is the inner tube gets work hardened and eventually shatters. Another result is the eventual erosion of the outer tube causing pinhole leaks.

Coils which are not properly vented will eventually load up with noncondensable gases. Coil performance (temperature rise) drops off as the noncondensables act as insulation inside the tubes.

The coils may also fill with condensate. The collapsing steam causes a vacuum inside the coil when the supply valve closes. The trapped condensate will then freeze causing the tubes to rupture after it melts. The use of a vacuum breaker at the condensate discharge will aid in relieving the vacuum in the coil and promote condensate drainage.

Refer to Tables 55 and 56 for 39M troubleshooting information.

⚠ WARNING

Disconnect power and allow all rotating equipment to stop before servicing unit. Physically secure all fans before performing unit service. Failure to do so may result in serious personal injury or death.

Water coil performance (when piped in parallel flow) will be reduced by approximately 5% for each coil row on coils 2 rows deep and deeper. Coils should always be piped with the water inlet on the leaving air side of the coil, regardless of water connection vertical position.

VFD Diagnostics

The drive detects error situations and reports them using:

- the green and red LEDs on the body of the drive (located under the keypad)
- the status LED on the control panel
- the control panel display
- the Fault Word and Alarm Word parameters bits (parameters 0305 to 0309)

The form of the display depends on the severity of the error. The user can specify the severity for many errors by directing the drive to ignore the error situation, report the situation as an alarm, or report the situation as a fault.

FAULTS (RED LED LIT)

The VFD signals that it has detected a severe error, or fault, by:

- enabling the red LED on the drive (LED is either steady or flashing)
- setting an appropriate bit in a Fault Word parameter (0305 to 0307)
- overriding the control panel display with the display of a fault code
- stopping the motor (if it was on)

The fault code on the control panel display is temporary. Pressing the MENU, ENTER, UP button or DOWN buttons removes the fault message. The message reappears after a few seconds if the control panel is not touched and the fault is still active.

ALARMS (GREEN LED FLASHING)

For less severe errors, called alarms, the diagnostic display is advisory. For these situations, the drive is simply reporting that it had detected something unusual. In these situations, the drive:

- flashes the green LED on the drive (does not apply to alarms that arise from control panel operation errors)
- sets an appropriate bit in an Alarm Word parameters (0308 or 0309)
- overrides the control panel display with the display of an alarm code and/or name

Alarm messages disappear from the control panel display after a few seconds. The message returns periodically as long as the alarm condition exists.

CORRECTING FAULTS

The recommended corrective action for faults is shown in the fault codes listing in Table 57. The VFD can also be reset to remove the fault. If an external source for a start command is selected and is active, the VFD may start immediately after fault reset.

To reset a fault indicated by a flashing red LED, turn off the power for 5 minutes. To reset a fault indicated by a red LED (not flashing), press RESET from the control panel or turn off the power for 5 minutes. Depending on the value of parameter 1604 (FAULT RESET SELECT), digital input or serial communication could also be used to reset the drive. When the fault has been corrected, the motor can be started.

HISTORY

For reference, the last three fault codes are stored into parameters 0401, 0412, 0413. For the most recent fault (identified by parameter 0401), the drive stores additional data (in parameters 0402 through 0411) to aid in troubleshooting a problem. For example, a parameter 0404 stores the motor speed at the time of the fault. To clear the fault history (all of Group 04, Fault History parameters), follow these steps:

1. In the control panel, Parameters mode, select parameter 0401.
2. Press EDIT.
3. Press the UP and DOWN button simultaneously.
4. Press SAVE.

CORRECTING ALARMS

To correct alarms, first determine if the Alarm requires any corrective action. Action is not always required. Use Table 58 to find and address the root cause of the problem.

Table 55 — Humidifier Troubleshooting

SYMPTOM	POSSIBLE CAUSES	POSSIBLE REMEDIES
Water is spitting from the discharge manifolds	Steam trap is not functioning properly.	Clean or replace non-functioning steam trap on the valve/trap assembly.
	The header P-traps are not draining.	Clean and check that plumbing runs to gravity drain. Check that trap height exceeds the static pressure of the duct/AHU, especially if it is under negative pressure.
	The steam line has been taken from the bottom of the steam source or is not sloped properly.	Change line to take off from the top and check proper slopes.
	The steam main is overloaded with water.	Locate cause and correct problem.
	Vertical discharge manifolds are not plumb.	Make manifolds plumb.
	Horizontal headers are not level.	Make headers level.
	Vertical discharge manifolds are installed upside down.	Reinstall correctly.
	Check valve sizing to maximum manifold capacity.	Resize valve within manifold capacity.
Steam does not discharge from the manifolds when the valve is open	Valve is not open.	Open valve.
	There is no steam available.	Verify that steam is available.
	There is a change in steam pressure.	Verify that the steam pressure has not changed. Excessively high pressure could jam the valve.
	Steam is not visible.	Carefully place a mirror or metal object close to one of the steam discharge slots. If it fogs, steam is discharging, but evaporating very quickly. This is not a problem. NEVER PLACE YOUR HAND OVER OR NEAR THE STEAM DISCHARGE SLOTS.
	Y-strainer may be clogged.	Clean or replace Y-strainer.
Steam valve will not open	There is no power.	Verify and, if necessary, correct power or air pressure to the valve actuator.
	There is no control signal.	Verify and, if necessary, correct control signal or pressure range to the valve actuator.
	Control polarity has been reversed.	Verify and, if necessary, correct control signal polarity to the valve actuator.
	Actuator is not working.	Remove actuator to verify that it is operational. Clean or replace jammed valve.
	There is high steam pressure.	Verify that the steam pressure has not changed. Excessively high pressure could jam the valve.
	Valve has been installed incorrectly.	Verify proper valve orientation. Electric valves must face upward.
Steam valve will not close	There is no control signal.	Verify and, if necessary, correct control signal to the valve actuator.
	Control polarity has been reversed.	Verify and, if necessary, correct control signal polarity to the valve actuator.
	Actuator is not working.	Remove actuator to verify that it is operational. Clean or replace jammed valve.
	There is high steam pressure.	Verify that the steam pressure has not changed. Excessively high pressure could jam the valve.
	Valve has been installed incorrectly.	Verify proper valve orientation. Electric valves must face upward.
Steam valve is leaking	Control signal is not at full range.	Verify and, if necessary, correct full-range control signal to the valve actuator.
	Control polarity has been reversed.	Verify and, if necessary, correct control signal polarity to the valve actuator.
	Actuator is not working.	Remove actuator and test to verify that it is operational. If not, clean or replace jammed valve.
	There is high steam pressure.	Verify that the steam pressure has not changed. Excessively high pressure could jam the valve.

LEGEND
AHU — Air-Handling Unit

Table 55 — Humidifier Troubleshooting (cont)

SYMPTOM	POSSIBLE CAUSES	POSSIBLE REMEDIES
Humidity exceeds set point	Control signal is not at full range.	Verify and, if necessary, correct compatibility of the full range control signal to the valve actuator.
	There is no control signal.	Verify and, if necessary, correct control signal polarity to the valve actuator.
	The controller is out of calibration.	Check and, if necessary, correct calibration of controller.
	Humidity sensor is not installed properly.	Ensure that humidity sensors are installed correctly and not located in drafts (wall). If necessary, correct sensor installation.
	Actuator is not working.	Remove actuator and test to verify that it is operational. If not, clean or replace jammed valve.
	There is high steam pressure.	Verify that the steam pressure has not changed. Excessively high pressure could jam the valve.
	Boiler is not operating correctly.	Verify stable boiler pressure. Wide swings in pressure could affect the humidity controls.
Humidity remains below set point	Control signal is not at full range.	Verify and, if necessary, correct compatibility of the full range control signal to the valve actuator.
	Control polarity has been reversed.	Verify and, if necessary, correct control signal polarity to the valve actuator.
	Controller is out of calibration.	Check and, if necessary, correct calibration of controller.
	Humidity sensor is not installed properly.	Ensure that humidity sensors are installed correctly and not located in drafts (wall). If necessary, correct sensor installation.
	Actuator is not working.	Remove actuator and test to verify that it is operational. If not, clean or replace jammed valve.
	There is high steam pressure.	Verify that the steam pressure has not changed. Excessively high pressure could jam the valve.
	Boiler is not operating correctly.	Verify stable boiler pressure. Wide swings in pressure could affect the humidity controls.
	There is an airflow switch fault.	Ensure that airflow switch is not fluttering. If necessary, correct fluttering airflow switch.
	The high limit controller is not in the correct location.	Verify that high-limit controller is not located too close to steam discharge manifolds. If necessary, correct location of controller.
	The humidifier is too small.	Humidifier is undersized. Check humidity load calculations.
Condensate in unit	The humidifier is too large.	Verify humidifier capacity versus air volume.
	There is a high limit controller fault.	Verify that high limit controller is working. If necessary, correct problem.
	Evaporation distance is too short.	Verify and, if necessary, correct evaporation distance to obstructions or elbows.
	Steam valve is leaking.	Verify steam valve is not leaking. If necessary, correct leaking steam valve.
Steam leaks from P-traps	The trap height is incorrect.	Ensure that height of trap exceeds the static pressure of the duct/AHU, especially if under negative pressure.
	Valve sizing is incorrect.	Check valve sizing to maximum manifold capacity. If necessary, resize valve within manifold capacity.
	There is excessively high steam pressure.	Check that inlet steam pressure does not exceed humidifier capability.

LEGEND
AHU — Air-Handling Unit

Table 56 — Unit Troubleshooting

SYMPTOM	POSSIBLE CAUSES	POSSIBLE REMEDIES
Motor fails to start	Power line open	Reset circuit breaker.
	Improper wiring or loose connections	Check wiring and connections.
	Overload trip	Check and reset overload.
	Mechanical failure	Inspect motor and drive for operation and/or damage.
	Improper current supply	Check rating plate against actual supply voltage. Contact power provider for adjustments if needed.
Motor stalls	Open phase	Check line for open phase.
	Overloaded motor	Reduce motor load or replace with larger motor.
	Low line voltage	Check supply line, correct voltage.
Excessive vibration	Bearing/shaft misalignment	Check and align bearing set screws.
	Shipping blocks/spacers not removed	Remove shipping blocks/spacers.
	Excessive belt tension	Adjust belt tension.
	Drive misaligned	Align drive.
Bearing(s) hot	Grease not evenly distributed after lubrication	Allow unit to cool down and restart.
	Over-lubrication	Clean and purge excess grease.
	No lubricant	Check bearings for damage and apply lubricant.
	Misaligned bearing	Check shaft level and reset alignment.
Motor does not run at full speed	Low voltage at motor terminals	Check supply voltage and correct voltage loss.
	Supply wiring to motor too small	Rewire with properly sized wire.
Motor overheats	Overloaded motor	Reduce motor load or replace with larger motor.
	Motor fan is clogged, preventing motor cooling	Clean motor fan.
Excessive motor noise	Mounting bolts loose	Tighten bolts.
	Rigid coupling connectors	Replace with flexible connectors.
	Worn motor bearings	Replace bearings and seals.
	Fan rubbing on housing	Adjust housing.
Motor runs and then slows	Partial supply voltage loss	Check for loose/dirty connections. Verify supply voltage.
Excessive motor bearing wear	High load due to over-tensioned drive	Check belt tension and load.
	Excessive overhung load caused by a small diameter motor sheave	Replace with larger sheave.
Loose Fan Belt	Improper motor position	Adjust tension.
	Worn sheaves	Replace sheaves.
	Worn or damaged belt	Check sheave alignment and replace belt(s).
Drive Noise	Sheave(s) not tight on fan/motor shaft(s)	Tighten sheaves.
	Belts contacting guard(s)	Adjust or tighten belt guard mounts.
	Belts too loose or too tight	Adjust belt tension.
	Belts and sheaves mismatched	Install proper belts.
	Belts not length matched (multiple belt set-up)	Install matched belts.
	Misaligned sheaves	Align sheaves.
	Belts worn	Replace belts.
	Belts dirty or oily	Replace belts.
No Power to Unit	Power switch in wrong position.	Verify SPP power switch handle is in the proper position.
	Circuit breaker tripped	Reset SPP circuit breakers.
	Fuse blown	Inspect SPP fuses.

Table 56 — Unit Troubleshooting (cont)

SYMPTOM	POSSIBLE CAUSES	POSSIBLE REMEDIES
Bearing noise	Defective bearing	Repair/replace bearing.
	Lack of lubrication	Lubricate bearing.
	Loose bearing	Adjust bearing support or bearing on shaft.
	Bearing misaligned	Align bearing properly.
	Foreign material/dirt inside bearing	Inspect and clean bearing.
	Corrosion between bearing and shaft	Clean or replace bearing as required.
High velocity air noise	Fan speed too high	Check fan speed.
	Ductwork too restrictive	Increase duct size for proper air velocity.
	Low static pressure	Decrease fan speed to obtain proper pressure.
	Registers and grilles too restrictive	Replace with correctly sized registers and grilles.
Rattling or whistling noise in airstream	Loose dampers, grilles, or splitters	Adjust as needed.
	Obstructed dampers or grilles	Remove obstruction(s).
	Sharp elbows in ductwork	Install larger radius elbows.
	Sudden expansion /contraction of ductwork	Install proper ductwork transitions.
	Turning vanes loose or not properly installed	Tighten or adjust as needed.
CFM lower than system requirements	Fan rotating backwards	Reverse any two power leads to the fan motor.
	Fan speed too slow	Check fan RPM.
	Duct system has more resistance than designed	Enlarge ductwork to match system requirements.
	Diffusers closed	Open diffusers.
High current draw (motor)	Motor overload	Reduce system load or use larger motor.
	Low line voltage	Consult power company about increasing line voltage.
Electric heat inoperative	Electric heater manual reset tripped	Determine cause of cutout and reset switch.
	Broken heating element	Replace element.
	Electric heater fuses blown	Replace fuses.
	Inoperative electric heating circuit contactor	Repair/replace as needed.
	Airflow switch interlock not closed	Check airflow sensing tube location and operation in airstream. Repair/replace as needed.
Heater cycles	Airflow marginally insufficient	Airflow switch may chatter and cycle heater circuits off and on. Or, automatic reset may open and close, causing a similar situation. Check unit airflow requirements and clean the system.
Improper temperature regulation	Intermittent power supply due to improper installation	Recheck installation procedure. Check contactor operation and safety cutout switches. Refer to heater wiring diagram.
	Erratic thermostat operation due to improper location or frequent resetting	Check thermostat installation instructions. Be certain that the thermostat location is not subjected to adverse temperature changes, such as those caused by opening doors or windows. Check for thermostat tampering.
	Air system characteristics are not in accordance with the job requirements	Check the supply-air fan is delivering adequate volume and velocity. Check air system balance. Be certain that heating coils are operating.
No hot water or steam heat	Defective hot water or steam valve actuator motor	Repair/replace as needed.
	Broken control linkage from actuator to valve assembly	Repair/replace as needed.
	Defective hot water or steam control valve	Repair/replace as needed.
Water outside condensate pan	Plugged or improper condensate drain.	Ensure drain properly installed and clean.
	Coil blowoff due to: — Excessive airflow — Dirty coil — Improper coil reversal. — Ingestion through intake or exhaust. — Unit has been torn down and reassembled. — Lack of diffuser on blow-through coil application. — *Condensate from 39M coil header.**	 — Ensure airside system has been properly balanced. — Check evaporator coil for cleanliness and wettability. — Ensure coil short fin faces upstream. — Ensure louvers or hoods are properly installed. — Look at reassembly points for lack of seals or poor reassembly. — Provide diffuser. — *Splash baffles with rubber seal installed (SMB040040).**
	For 39MW only: Coil connection housing field joints. *Leakage between access panels and frame.*	 Ensure joints between housing and curbs and housing of unit have been properly flashed and gasketed. *Ensure all retainers and latches closed.* *Replace leaking panels or doors.*

*May be serial number specific.

Table 57 — Fault Codes

FAULT CODE	FAULT NAME IN PANEL	DESCRIPTION AND RECOMMENDED CORRECTIVE ACTION
1	OVERCURRENT	Output current is excessive. Check for excessive motor load, insufficient acceleration time (parameters 2202 ACCELER TIME 1, default 30 seconds), or faulty motor, motor cables or connections.
2	DC OVERVOLT	Intermediate circuit DC voltage is excessive. Check for static or transient over voltages in the input power supply, insufficient deceleration time (parameters 2203 DECELER TIME 1, default 30 seconds), or undersized brake chopper (if present).
3	DEV OVERTEMP	Drive heat sink is overheated. Temperature is at or above 115°C (239°F). Check for fan failure, obstructions in the airflow, dirt or dust coating on the heat sink, excessive ambient temperature, or excessive motor load.
4	SHORT CIRC	Fault current. Check for short-circuit in the motor cable(s) or motor or supply disturbances.
5	OVERLOAD	Inverter overload condition. The drive output current exceeds the ratings.
6	DC UNDERVOLT	Intermediate circuit DC voltage is not sufficient. Check for missing phase in the input power supply, blown fuse, or under voltage on main circuit.
7	AI1 LOSS	Analog input 1 loss. Analog input value is less than AI1 FLT LIMIT (3021). Check source and connection for analog input and parameter settings for AI1 FLT LIMIT (3021) and 3001 AI<MIN FUNCTION.
8	AI2 LOSS	Analog input 2 loss. Analog input value is less than AI2 FLT LIMIT (3022). Check source and connection for analog input and parameter settings for AI2 FLT LIMIT (3022) and 3001 AI<MIN FUNCTION.
9	MOT OVERTEMP	Motor is too hot, as estimated by the drive. Check for overloaded motor. Adjust the parameters used for the estimate (3005 through 3009). Check the temperature sensors and Group 35 parameters.
10	PANEL LOSS	Panel communication is lost and either drive is in local control mode (the control panel displays LOC), or drive is in remote control mode (REM) and is parameterized to accept start/stop, direction or reference from the control panel. To correct, check the communication lines and connections. Check parameter 3002 PANEL COMM ERROR, parameters in Group 10: Command Inputs and Group 11: Reference Select (if drive operation is REM).
11	ID RUN FAIL	The motor ID run was not completed successfully. Check motor connections.
12	MOTOR STALL	Motor or process stall. Motor is operating in the stall region. Check for excessive load or insufficient motor power. Check parameters 3010 through 3012.
13	RESERVED	Not used.
14	EXT FAULT 1	Digital input defined to report first external fault is active. See parameter 3003 EXTERNAL FAULT 1.
15	EXT FAULT 2	Digital input defined to report second external fault is active. See parameter 3004 EXTERNAL FAULT 1.
16	EARTH FAULT	The load on the input power system is out of balance. Check for faults in the motor or motor cable. Verify that motor cable does not exceed maximum specified length.
17	UNDERLOAD	Motor load is lower than expected. Check for disconnected load. Check parameters 3013 UNDERLOAD FUNCTION through 3015 UNDERLOAD CURVE.
18	THERM FAIL	Internal fault. The thermistor measuring the internal temperature of the drive is open or shorted. Contact Carrier.
19	OPEX LINK	Internal fault. A communication-related problem has been detected between the OMIO and OINT boards. Contact Carrier.
20	OPEX PWR	Internal fault. Low voltage condition detected on the OINT board. Contact Carrier.
21	CURR MEAS	Internal fault. Current measurement is out of range. Contact Carrier.
22	SUPPLY PHASE	Ripple voltage in the DC link is too high. Check for missing main phase or blown fuse.
23	RESERVED	Not used.
24	OVERSPEED	Motor speed is greater than 120% of the larger (in magnitude) of 2001 MINIMUM SPEED or 2002 MAXIMUM SPEED parameters. Check parameter settings for 2001 and 2002. Check adequacy of motor braking torque. Check applicability of torque control. Check brake chopper and resistor.
25	RESERVED	Not used.
26	DRIVE ID	Internal fault. Configuration block drive ID is not valid.
27	CONFIG FILE	Internal configuration file has an error. Contact Carrier.
28	SERIAL 1 ERR	Field bus communication has timed out. Check fault setup (3018 COMM FAULT FUNC and 3019 COMM FAULT TIME). Check communication settings (Group 51 or 53 as appropriate). Check for poor connections and/or noise on line.
29	EFB CON FILE	Error in reading the configuration file for the field bus adapter.
30	FORCE TRIP	Fault trip forced by the field bus. See the field bus reference literature.
31	EFB1	Fault code reserved for the EFB (Embedded Field Bus) protocol application. The meaning is protocol dependent.
32	EFB2	Fault code reserved for the EFB protocol application. The meaning is protocol dependent.
33	EFB3	Fault code reserved for the EFB protocol application. The meaning is protocol dependent.
34	MOTOR PHASE	Fault in the motor circuit. One of the motor phases is lost. Check for motor fault, motor cable fault, thermal relay fault (if used), or internal fault.
35	OUTP WIRING	Error in power wiring suspected. Check that input power wired to drive output. Check for ground faults.
101-105	SYSTEM ERROR	Error internal to the drive. Contact Carrier and report the error number.
201-206	SYSTEM ERROR	Error internal to the drive. Contact Carrier and report the error number.
1000	PAR HZRPM	Parameter values are inconsistent. Check for any of the following: 2001 MINIMUM SPEED > 2002 MAXIMUM SPEED 2007 MINIMUM FREQ > 2008 MAXIMUM FREQ 2001 MINIMUM SPEED / 9908 MOTOR NOM SPEED is outside of the range: –128 to +128 2002 MAXIMUM SPEED / 9908 MOTOR NOM SPEED is outside of the range: –128 to +128 2007 MINIMUM FREQ / 9907 MOTOR NOM FREQ is outside of the range: –128 to +128 2008 MAXIMUM FREQ / 9907 MOTOR NOM FREQ is outside of the range: –128 to +128
1001	PAR PFA REFNG	Parameter values are inconsistent. Check that 2007 MINIMUM FREQ is negative, when 8123 PFA ENABLE is active.
1002	PAR PFA IOCNF	Parameter values are inconsistent. The number of programmed PFA relays does not match with Interlock configuration, when 8123 PFA ENABLE is active. Check consistency of RELAY OUTPUT parameters 1401 through 1403, and 1410 through 1412. Check 8117 NR OF AUX MOTORS, 8118 AUTOCHANGE INTERV, and 8120 INTERLOCKS.

Table 57 — Fault Codes (cont)

FAULT CODE	FAULT NAME IN PANEL	DESCRIPTION AND RECOMMENDED CORRECTIVE ACTION
1003	PAR AI SCALE	Parameter values are inconsistent. Check that parameter 1301 AI MIN > 1302 AI 1 MAX and that parameter 1304 AI 2 MIN > 1305 AI 2 MAX.
1004	PAR AO SCALE	Parameter values are inconsistent. Check that parameter 1504 AO 1 MIN > 1505 AO 1 MAX and that parameter 1510 AO 2 MIN > 1511 AO 2 MAX.
1005	PAR PCU 2	Parameter values for power control are inconsistent: Improper motor nominal kVA or motor nominal power. Check the following parameters: 1.1 < (9906 MOTOR NOM CURR * 9905 MOTOR NOM VOLT * 1.73 / PN) < 2.6 Where: PN = 1000 * 9909 MOTOR NOM POWER (if units are kW) or PN = 746 * 9909 MOTOR NOM POWER (if units are HP, e.g., in U.S.A.)
1006	PAR EXT RO	Parameter values are inconsistent. Check the extension relay module for connection and 1410 through 1412 RELAY OUTPUTS 4 through 6 have non-zero values.
1007	PAR FBUS	Parameter values are inconsistent. Check that a parameter is set for field bus control (e.g., 1001 EXT1 COMMANDS = 10 (COMM)), but 9802 COMM PROT SEL = 0.
1008	PAR PFA MODE	Parameter values are inconsistent. The 9904 MOTOR CTRL MODE must be = 3 (SCALAR SPEED), when 8123 PFA ENABLE is activated.
1009	PAR PCU 1	Parameter values for power control are inconsistent or improper motor nominal frequency or speed. Check for both of the following: 1 < (60 * 9907 MOTOR NOM FREQ / 9908 MOTOR NOM SPEED < 16 0.8 < 9908 MOTOR NOM SPEED / (120 * 9907 MOTOR NOM FREQ / Motor poles) < 0.992
1010	OVERRIDE/PFA CONFLICT	Override mode is enabled and PFA is activated at the same time. This cannot be done because PFA interlocks cannot be observed in the override mode.

Table 58 — Alarm Codes

ALARM CODE	ALARM NAME IN PANEL	DESCRIPTION AND RECOMMENDED CORRECTIVE ACTION
2001	—	Reserved
2002	—	Reserved
2003	—	Reserved
2004	DIR LOCK	The change in direction being attempted is not allowed. Do not attempt to change the direction of motor rotation, or change parameter 1003 DIRECTION to allow direction change (if reverse operation is safe).
2005	I/O COMM	Field bus communication has timed out. Check fault setup (3018 COMM FAULT FUNC and 3019 COMM FAULT TIME). Check communication settings (Group 51 or 53 as appropriate). Check for poor connections and/or noise on line.
2006	AI1 LOSS	Analog input 1 is lost, or value is less than the minimum setting. Check input source and connections. Check the parameter that sets the minimum (3021) and the parameter that sets the Alarm/Fault operation (3001).
2007	AI2 LOSS	Analog input 2 is lost, or value is less than the minimum setting. Check input source and connections. Check the parameter that sets the minimum (3022) and the parameter that sets the Alarm/Fault operation (3001).
2008	PANEL LOSS	Panel communication is lost and either the VFD is in local control mode (the control panel displays HAND), or the VFD is in remote control mode (AUTO) and is parameterized to accept start/stop, direction or reference from the control panel. To correct, check the communication lines and connections, Parameter 3002 PANEL LOSS, and parameters in groups 10 COMMAND INPUTS and 11 REFERENCE SELECT (if drive operation is REM).
2009	—	Reserved
2010	MOT OVERTEMP	Motor is hot, based on either the VFD estimate or on temperature feedback. This alarm warns that a Motor Overload fault trip may be near. Check for overloaded motor. Adjust the parameters used for the estimate (3005 through 3009). Check the temperature sensors and Group 35 parameters.
2011	UNDERLOAD	Motor load is lower than expected. This alarm warns that a Motor Underload fault trip may be near. Check that the motor and drive ratings match (motor is NOT undersized for the drive). Check the settings on parameters 3013 to 3015.
2012	MOTOR STALL	Motor is operating in the stall region. This alarm warns that a Motor Stall fault trip may be near.
2013*	AUTORESET	This alarm warns that the drive is about to perform an automatic fault reset, which may start the motor. To control automatic reset, use parameter group 31 (AUTOMATIC RESET).
2014*	AUTOCHANGE	This alarm warns that the PFA autochange function is active. To control PFA, use parameter group 81 (PFA) and the Pump Alternation macro.
2015	PFA INTERLOCK	This alarm warns that the PFA interlocks are active, which means that the drive cannot start any motor (when Autochange is used), or a speed regulated motor (when Autochange is not used).
2016	—	Reserved
2017*	OFF BUTTON	This alarm indicates that the OFF button has been pressed.
2018*	PID SLEEP	This alarm warns that the PID sleep function is active, which means that the motor could accelerate when the PID sleep function ends. To control PID sleep, use parameters 4022 through 4026 or 4122 through 4126.
2019	ID RUN	The VFD is performing an ID run.
2020	OVERRIDE	Override mode is activated.
2021	START ENABLE 1 MISSING	This alarm warns that the Start Enable 1 signal is missing. To control Start Enable 1 function, use parameter 1608. To correct, check the digital input configuration and the communication settings.
2022	START ENABLE 2 MISSING	This alarm warns that the Start Enable 2 signal is missing. To control Start Enable 2 function, use parameter 1609. To correct, check the digital input configuration and the communication settings.
2023	EMERGENCY STOP	Emergency stop is activated.

*This alarm is not indicated by a relay output, even when the relay output is configured to indicate alarm conditions (parameter 1401 RELAY OUTPUT = 5 [ALARM] or 16 [FLT/ALARM]).

INDEX

Alarm codes *281*
Baffles, in-track *235*
Cleaning unit interior/exterior *227*
Coil
- Changing coil hand *229*
- Cleaning *227*
- Connection housing *119*
- Connection sizes, steam *63*
- Connection sizes, water *62*
- Data *34*
- Freeze-up protection *135*
- Installation *129*
- Piping recommendations, steam *132*
- Piping recommendations, water *132*
- Removal *228*
- Volume *65*
- Weights *66*

Component weights and lengths *15*
Condensate drain *142*
Convenience outlets *213*
Direct-expansion circuiting data
- Large face area coils *53-61*
- Medium face area coils *47-52*

Direct expansion coil *64, 135*
Disconnect *146*
Distributor nozzle change-out *136*
Drain positioning *87*
Drive package data *273*
Duct connections *93*
Electric heaters *170, 221*
Energy recovery ventilation sections *207, 222*
Energy recovery wheel *220*
Exhaust box sections *107*
External vibration isolation *88*
Face and bypass dampers *100*
Fan airflow measurement *118*
Fan drive centerline distances in inches
- Airfoil *78-86*
- Forward-curved *70-77*

Fan drives *115*
Fan motors *115*
Fan motor replacement *222*
Fan motor starter *146*
Fan motor wiring recommendations *142*
Fan removal *272*
Fan shaft bearing *236*
Fan sled
- Dimensions *109*
- Disassembly *109*

Fault codes *280*
Filters *231*
Filter drier *137*
Hot gas bypass *139*
- Piping *141*
- Wiring *141*

Gas furnaces, duct
- Components *198*
- Installation *196*
- Start-up *219*
- Service *221*

Troubleshooting *274-281*
TXV
- Bulb

Gas furnaces, rack system
- Components *204*
- Installation *203*
- Start-up *215*
- Service *221*

Humidifier *123*
Indoor and outdoor unit shipping split *90*
Inspection *87*
Installation *90-132*
Integral face and bypass coil connection sizes, steam *64*
Integral face and bypass coil connection sizes, hot water *63*
Internal vibration isolation *88*
Introduction *3*
Lubrication *273*
Marine lights *213*
Minihelic gauge *231*
Mixing box/filter mixing box damper linkage *104*
Mixing box damper actuators *107*
Motor nameplate data *145*
Motor package data *273*
Motor location *273*
Motor power wiring *115*
Motor weights *69*
Nomenclature
- 28M coil *6-10*
- 28MK humidifier *11*
- 39M unit *5*
- Carel strainer part number *127*
- Gas-fired furnace *11*
- Motor *12*

Outdoor hoods and louvers *118*
Panel cutting *100*
Physical data
- Fan offerings by unit size and type *22*
- Fan data by wheel diameter and type *29*

Pier or beam mount *89*
Piezometer ring *118*
Power Exhaust Hood *123*
Pre-installation *87-90*
Refrigerant piping *135*
Return fan *107*
Rigging and handling *87*
Roof curb *88*
Safety considerations *3,4*
Service *221-274*
Service clearance *87*
Shaft removal *272*
Sheaves *115*
Shunt trip installation
- ACI part no. 135406 *155*
- ACI part no. 135728 or 135728A *156*

Stacked supply fan *107*
Stacked units turning plenum *107*
Start-up *215-221*
Start-up checklist *215, CL-1 to CL-6*
Steam coil *274*
Storage, long-term *87*
  - Installation *137*
  - Location *137*
- Expansion valve adjustment *138*

External equalizer connection *138*
Location *137*
Oil return connection *138*
Solder techniques *137*
Unit and component identification *4-14*
Unit suspension *87*
V-Belts *116*
Valve location (TXV) *137*
Variable frequency drive *273*
Vertical draw-thru units *107*
Vertical manifold assembly *129*
VFD *146*
VFD configuration *158*
VFD diagnostics *275*
VFD modes *158*
VFD with bypass *147*
Winter shutdown *227*
Zone damper section *103*

© 2025 Carrier

START-UP CHECKLIST — 39MN INDOOR AHU UNITS

NOTE: To avoid injury to personnel and damage to equipment or property when completing the procedures listed in this start-up checklist, use good judgment, follow safe practices, and adhere to the safety considerations/information as outlined in preceding sections of this Installation, Start-Up and Service Instructions document.

I. PRELIMINARY INFORMATION

MODEL NO. JOB NAME _____

SERIAL NO. ADDRESS _____

START-UP DATE_____

TECHNICIAN NAME _____

ADDITIONAL ACCESSORIES

_____

II. PRE-START-UP

SINGLE POINT POWER OPTION

Are power connections to the Single Point Power Enclosure made and checked? (Y/N) _____

Are all power harness connections made at unit splits? (Y/N) _____

Are all wiring terminals tight? (Y/N) _____

CONTROLS

Are thermostat(s) and indoor fan control wiring connections made and checked? (Y/N) _____

Are all wiring terminals tight? (including power to fan motors, heaters, etc.) (Pg 146) (Y/N) _____

AIR HANDLER

Remove packaging and any construction debris. (Y/N) _____

Inspect for shipping and/or handling damage, make claims as required. (Pg 87) (Y/N) _____

Inspect all panel flanges for damage. Panel flanges should be smooth with no sharp bends. (Y/N) _____

Are all corner connectors and frame to channel joints smooth with no cracks, large bumps or depressions in the caulk? (Y/N) _____

Are any door latches loose or damaged? If so, tighten or replace. (Y/N) _____

Release fan holddown bolts. (Pg 88, Fig. 18) (Y/N) _____

Check fan bearings and shaft(s) for tightness. (Pg 215) (Y/N) _____

Hand turn fan to ensure no rubbing with housing. (Y/N) _____

Have fan and motor pulleys been checked for proper alignment? (Pg 116) (Y/N) _____

Do the fan belts have proper tension? (Pg 116) (Y/N) _____

Are proper air filters in place? (Pg 231-272) (Y/N) _____

Are all wiring terminals to fan motors and heaters tight? (Pg 115) (Y/N) _____

Has water been placed in drain pan to confirm proper drainage? (Y/N) _____

Is duct connected to unit? (Pg 93) (Y/N) _____

Verify wiring is correct for application (voltage, etc.) per component label. (Y/N) _____

Are field wiring penetrations into 39M properly sealed for air and water leaks (includes conduit inside box)? (Y/N) _____

If the air handler has multiple direct drive plenum fans or ECM fans, are any of the fan inlets covered with a blank-off plate? If so, remove the blank-off plate and store in an appropriate location. (Y/N) _____

PIPING

Have leak checks been made at chillers, boilers, valves, and indoor coils? (Y/N) _____

Has air been bled from system? (Y/N) _____

Is freeze protection provided (if required)? (Pg 135) (Y/N) _____

For DX system, has system been charged with refrigerant? (Pg 135) (Y/N) _____

Locate, repair, and report any leaks.

Manufacturer reserves the right to discontinue, or change at any time, specifications or designs without notice and without incurring obligations.

III. START-UP

If this unit is to be used for construction conditioning without ductwork, ensure balancing is redone and filters replaced once construction is complete.

Verify wiring is correct for application (voltage, etc.) per component label. (Y/N) _____

If fan is direct drive, ensure that the VFD has been properly programmed for maximum frequency output to limit fan speed to maximum (pg 146)

Ensure correct fan rotation. (Y/N) _____

After air and water balance is complete, are pulleys aligned? (Y/N) _____

If the fan sheaves were changed during the air balance, the assembly must be rebalanced.

Were the sheaves changed? (Pg 115) (Y/N) _____

Was a dynamic balance performed on the fan assembly? (Y/N) _____

After air and water balance and at least 10 minutes running time, record the following measurements:

Check indoor fan speed and record:

Fan RPM=	_____
Entering air db temp	_____
Unit entering air wb temp	_____
Leaving air db temp	_____
Leaving air wb temp	_____
Entering water temp	_____
Leaving water temp	_____

Ensure all water inside air handler is in condensate pan. (Y/N) _____

Ensure fixed pitch pulleys have been installed. (Y/N) _____

Check for vibration levels. (Y/N) _____

If electric heater is supplied, ensure heater airflow switch closes at design airflow (see page 170). (Y/N) _____

NOTES:

_____

_____

_____

_____

SIGNATURE:_____ **DATE:**_____

CUT ALONG DOTTED LINE

CUT ALONG DOTTED LINE

NOTE: To avoid injury to personnel and damage to equipment or property when completing the procedures listed in this start-up checklist, use good judgment, follow safe practices, and adhere to the safety considerations/information as outlined in preceding sections of this Installation, Start-Up and Service Instructions document.

I. PRELIMINARY INFORMATION

MODEL NO. JOB NAME_____

SERIAL NO. ADDRESS _____

START-UP DATE _____

TECHNICIAN NAME_____

ADDITIONAL ACCESSORIES

_____

II. PRE-START-UP

SINGLE POINT POWER OPTION

Are power connections to the Single Point Power Enclosure made and checked? (Y/N) _____

Are all power harness connections made at unit splits? (Y/N) _____

Are all wiring terminals tight? (Y/N) _____

CONTROLS

Are control(s) and indoor fan control wiring connections made and checked? (Y/N) _____

Are all wiring terminals tight? (including power to fan motors, heaters, etc.) (Pg 146) (Y/N) _____

AIR HANDLER

Remove packaging and any construction debris. (Y/N) _____

Inspect for shipping and/or handling damage, make claims as required. (Pg 87) (Y/N) _____

Inspect all panel flanges for damage. Panel flanges should be smooth with no sharp bends. (Y/N) _____

Are all corner connectors and frame to channel joints smooth with no cracks, large bumps or depressions in the caulk? (Y/N) _____

Are any door latches loose or damaged? If so, tighten or replace (Y/N) _____

AT EACH SECTION JOINT, VERIFY:		JOINT 1	JOINT 2	JOINT 3	JOINT 4	JOINT 5	JOINT 6
IS ROOF SLIDER INSTALLED ON TOP OF ROOF?	(PG 93)	(Y/N) _____	(Y/N) _____	(Y/N) _____	(Y/N) _____	(Y/N) _____	(Y/N) _____
IS END ROOF BRACKET MOUNTED AND GASKETED TO EACH SIDE OF ROOF JOINT?	(PG 89)	(Y/N) _____	(Y/N) _____	(Y/N) _____	(Y/N) _____	(Y/N) _____	(Y/N) _____
ARE BASE RAILS BOLTED ON BOTH SIDES?	(PG 89-90)	(Y/N) _____	(Y/N) _____	(Y/N) _____	(Y/N) _____	(Y/N) _____	(Y/N) _____
ARE UPPER SIDE TOP BRACKETS UNDER ROOF BOLTED AND TIGHTENED?	(PG 93)	(Y/N) _____	(Y/N) _____	(Y/N) _____	(Y/N) _____	(Y/N) _____	(Y/N) _____
ARE BOTH SECTION TO SECTION JOINTS UNIFORMLY GASKETED?		(Y/N) _____	(Y/N) _____	(Y/N) _____	(Y/N) _____	(Y/N) _____	(Y/N) _____
IS GASKET COMPRESSED AND A SECTION-TO-SECTION SPLIT CAULKED ALONG ENTIRE LENGTH OF SEAM?	(PG 89)	(Y/N) _____	(Y/N) _____	(Y/N) _____	(Y/N) _____	(Y/N) _____	(Y/N) _____

IF CCH ATTACHED, VERIFY CCH TO UNIT SEALS:		CCH 1	CCH 2	CCH 3
IS ROOF BRACKET SLIDER INSTALLED ON TOP OF ROOF?	(PG 122)	(Y/N) _____	(Y/N) _____	(Y/N) _____
ARE SIDE FLASHINGS INSTALLED ON BOTH SIDES?	(PG 121)	(Y/N) _____	(Y/N) _____	(Y/N) _____
IS CCH TO UNIT BASE JOINT CAULKED PER INSTRUCTIONS?	(PG 122)	(Y/N) _____	(Y/N) _____	(Y/N) _____

Release fan holddown bolts and shipping brackets. (Pg 88, Fig. 18) (Y/N) _____
Check fan bearings and shaft(s) for tightness (Pg 215) (Y/N) _____
Fan bearings are lubricated from the factory. Remove zerk fitting to verify. Do not overgrease! (Y/N) _____
Turn fan by hand to ensure no rubbing with housing. (Y/N) _____
Have fan and motor pulleys been checked for proper alignment? (Pg 116) (Y/N) _____
Do the fan belts have proper tension? (Pg 116) (Y/N) _____
Are proper air filters in place? (Pg 231-272) (Y/N) _____
Are all wiring terminals to fan motors and heaters tight? (Pg 115) (Y/N) _____
Has water been placed in drain pan to confirm proper drainage? (Y/N) _____
Is duct connected directly to the unit? (Pg 93) (Y/N) _____
Verify wiring is correct for application (voltage, etc.) per component label. (Y/N) _____
Are field wiring penetrations into 39M properly sealed for air and water leaks (includes conduit inside box)? (Y/N) _____
If the air handler has multiple direct drive plenum fans or ECM fans, are any of the fan inlets covered with a blank-off plate? If so, remove the blank-off plate and store in an appropriate location. (Y/N) _____

PIPING

Have leak checks been made at chillers, boilers, valves, and indoor coils? (Y/N) _____
Has air been bled from system? (Y/N) _____
Is freeze protection provided (if required)? (Pg 135) (Y/N) _____
For DX system, has system been charged with refrigerant? (Pg 135) (Y/N) _____
Locate, repair, and report any leaks.

III. START-UP

If this unit is to used for construction conditioning without ductwork, ensure balancing is redone and filters replaced once construction is complete.

Verify wiring is correct for application (voltage, etc.) per component label. (Y/N) _____
If fan is direct drive, ensure that the VFD has been properly programmed for maximum frequency output to limit fan speed to maximum (pg 146)
Ensure correct fan rotation. (Y/N) _____
After air and water balance is complete, are pulleys aligned? (Y/N) _____
If sheaves were changed during air balance, assembly must be rebalanced. Were the sheaves changed? (Pg 115) (Y/N) _____
Was a dynamic balance performed on the fan assembly? (Y/N) _____
After air and water balance and at least 10 minutes running time, record the following measurements:

Check indoor fan speed and record:
Fan RPM= _____
Entering air db temp _____
Unit entering air wb temp _____
Leaving air db temp _____
Leaving air wb temp _____
Entering water temp _____
Leaving water temp _____

Ensure all water inside air handler is in condensate pan. (Y/N) _____
Ensure fixed pitch pulleys have been installed. (Y/N) _____
Check for vibration levels. (Y/N) _____
If electric heater is supplied, ensure heater airflow switch closes at design airflow (see page 170). (Y/N) _____

NOTES:

_____
_____
_____
_____

SIGNATURE:_____ **DATE:**_____

CUT ALONG DOTTED LINE

CUT ALONG DOTTED LINE

START-UP CHECKLIST — CARRIER 39M GAS-FIRED DUCT FURNACE

NOTE: To avoid injury to personnel and damage to equipment or property when completing the procedures listed in this start-up checklist, use good judgment, follow safe practices, and adhere to the safety considerations/information as outlined in preceding sections of this Installation, Start-Up and Service Instructions document.

I. PRELIMINARY INFORMATION

FURNACE SERIAL NO(S) _____

CARRIER MODEL NO._____

SERIAL NO. _____

START-UP DATE _____

START-UP CONTRACTOR _____

TECHNICIAN NAME _____

PHONE _____

TYPE OF GAS _____

GAS PRESSURE AT INLET (BURNERS OFF)_____ in. wg

SUPPLY VOLTAGE AT JUNCTION BOX _____ vac

II. OPERATING SET-UP

	SINGLE UNIT		2 UNITS IN SERIES — SECONDARY HEATER
OPERATING SET-UP DATA	LOW FIRE (0V DC)	HIGH FIRE (10V DC)	HIGH FIRE (10V DC)
Gas Press. at Train Inlet	_____in. wg	_____in. wg	_____in. wg
Gas Press. at Burner Manifold	_____in. wg	_____in. wg	_____in. wg
Gas Input Rate	_____Btuh	_____Btuh	_____Btuh
CO_2 in Flue Gas	_____%	_____%	_____%
CO in Flue Gas	_____ppm	_____ppm	_____ppm
Flue Gas Temp at Discharge	_____°F	_____°F	_____°F
Temperature Rise	_____°F	_____°F	_____°F

III. OPERATION CHECKLIST

All gas lines and connections checked for leaks (Pg 200) (Y/N) _____

Adequate combustion air (Pg 198) (Y/N) _____

Condensate drain lines installed (Pg 197) (Y/N) _____

Any system deficiencies noted (Y/N) _____

DESCRIBE:

_____

_____

_____

_____

SIGNATURE:_____ **DATE:**_____

START-UP CHECKLIST — CARRIER 39M GAS-FIRED FURNACE RACK ASSEMBLY

NOTE: To avoid injury to personnel and damage to equipment or property when completing the procedures listed in this start-up checklist, use good judgment, follow safe practices, and adhere to the safety considerations/information as outlined in preceding sections of this Installation, Start-Up and Service Instructions document.

I. PRELIMINARY INFORMATION

FURNACE SERIAL NO(S). _____

CARRIER MODEL NO. _____

SERIAL NO. _____

START-UP DATE _____

START-UP CONTRACTOR _____

TECHNICIAN NAME _____

PHONE _____

TYPE OF GAS _____

GAS PRESSURE AT INLET (BURNERS OFF) _____ in. wg

SUPPLY VOLTAGE AT JUNCTION BOX _____ vac

II. OPERATING SET-UP

	SINGLE UNIT		2 RACKED FURNACES IN SERIES — SECONDARY SYSTEM
OPERATING SET-UP DATA	**LOW FIRE (0v DC)**	**HIGH FIRE (10v DC)**	**HIGH FIRE (10v DC)**
Gas Press. at Supply Inlet	_____in. wg	_____in. wg	_____in. wg
Gas Input Rate	_____Btuh	_____Btuh	_____Btuh
Measurements at Common Header Discharge			
CO_2 in Flue Gas	_____%	_____%	_____%
CO in Flue Gas	_____ppm	_____ppm	_____ppm
Flue Gas Temp at Discharge	_____°F	_____°F	_____°F
Temperature Rise	_____°F	_____°F	_____°F

III. OPERATION CHECKLIST

All gas lines and connections checked for leaks (Pg 205) (Y/N) _____

Adequate combustion air (Pg 205) (Y/N) _____

Condensate drain lines installed (Pg 204) (Y/N) _____

Any system deficiencies noted (Y/N) _____

DESCRIBE:

_____

_____

_____

_____

SIGNATURE:_____ **DATE:**_____

CUT ALONG DOTTED LINE

CUT ALONG DOTTED LINE

© 2025 Carrier