Invacare® ***Tracer IV®*** ***Heavy Duty/Extra Wide*** Wheelchair

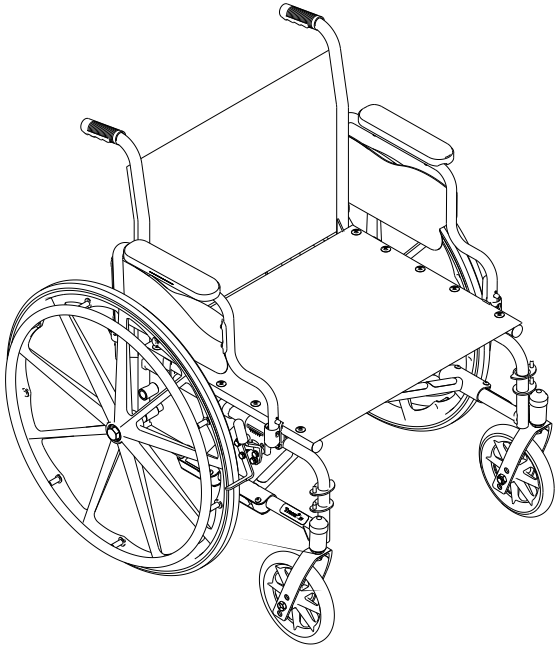

User Manual

EN

This manual MUST be given to the user of the product.

BEFORE using this product, read this manual and save for future reference.

INVACARE®

Yes, you can.®

© 2016 Invacare Corporation. All rights reserved. Republication, duplication or modification in whole or in part is prohibited without prior written permission from Invacare. Trademarks are identified by ™ and ®. All trademarks are owned by or licensed to Invacare Corporation or its subsidiaries unless otherwise noted.
Teflon is a registered trademark of DuPont.

1 GENERAL 6

Symbols 6
Limited Warranty 7

2 OVERVIEW 9

Label Locations 9
Component Identification 10
Specifications 11

3 SAFETY 13

General Guidelines 13
Intended Use 14
Wear and Tear Items 15
Operating Information 16
Safety/Handling of Wheelchairs 22

4 SAFETY INSPECTION 29

Safety Inspection Checklist 29

5 OPERATION 33

Unfolding and Folding Wheelchair 33
Using Patient Operated Wheel Locks 35
Installing/Removing Front Riggings 36
Raising/Lowering Elevating Legrest Assembly 37
Removing/Installing Armrests 38
Installing the Anti-tippers 39
Installing H-Strap/Calf Strap 40
Installing the Optional Wheel Lock Extension Handle 41

CONTENTS

6 ADJUSTMENT 42

Adjusting Patient Operated Wheel Locks 42
Adjusting Footplate Height 44
Adjusting Armrest Height 46
Adjusting Anti-tippers 47

7 TROUBLESHOOTING/MAINTENANCE 48

Troubleshooting **48**
Maintenance 48
Replacing/Repairing Rear Wheel Tire/Tube 50
Replacing/Repairing Caster Tire/Tube 50

8 SERVICE 51

Replacing Heel Loop 52
Replacing Back Upholstery 54
Replacing Seat Upholstery 54
Adjusting the Seat Width 55
Removing/Installing Rear Wheels 57
Replacing Rear Wheel Handrim 58
Installing/Replacing Front Casters and Forks 58
Adjusting Forks 59
Replacing Front Casters 60
Changing Seat-to-Floor Height 61
Installing Wheel Lock Shoe Extensions 63

9 OPTIONS **64**

Installing Carrying Pocket 65
Installing Crutch and Cane Carrier 66
Installing the Seat Positioning Strap 67

1 General

1.1 Symbols

Warnings

Signal words are used in this manual and apply to hazards or unsafe practices which could result in personal injury or property damage. See the information below for definitions of the signal words.

DANGER

Danger indicates an imminently hazardous situation which, if not avoided, will result in death or serious injury.

WARNING

Warning indicates a potentially hazardous situation which, if not avoided, could result in death or serious injury.

CAUTION

Caution indicates a potentially hazardous situation which, if not avoided, may result in property damage or minor injury or both.

IMPORTANT

Indicates a hazardous situation that could result in damage to property if it is not avoided.

Gives useful tips, recommendations and information for efficient, trouble-free use.

1.2 Limited Warranty

PLEASE NOTE: THE WARRANTY BELOW HAS BEEN DRAFTED TO COMPLY WITH FEDERAL LAW APPLICABLE TO PRODUCTS MANUFACTURED AFTER JULY 4, 1975.

This warranty is extended only to the original purchaser who purchases this product when new and unused from Invacare or a dealer. This warranty is not extended to any other person or entity and is not transferable or assignable to any subsequent purchaser or owner. Coverage under this warranty will end upon any such subsequent sale or other transfer of title to any other person.
This warranty gives you specific legal rights and you may also have other legal rights which vary from state to state.
Invacare warrants the side frames and cross members of this product when purchased new and unused to be free from defects in materials and workmanship for a period of five (5) years from the date of purchase from Invacare or a dealer, with a copy of the seller's invoice required for coverage under this warranty. Invacare warrants the upholstered materials (seat, back and armrests of the arm assembly) and remaining components of this product when purchased new and unused to be free from defects in materials and workmanship for a period of thirteen (13) months from date of purchase from Invacare or a dealer, with a copy of the seller's invoice required for coverage under this warranty. If within such warranty period this product shall be proven to be defective, such product shall be repaired or replaced, at Invacare's option, with refurbished or new parts. This warranty does not include any labor or shipping charges incurred in replacement part installation or repair of any such product. Product repairs shall not extend this warranty - coverage for repaired product shall end when this limited warranty terminates. Invacare's sole obligation and your exclusive remedy under this warranty shall be limited to such repair and/or replacement.
For warranty service, please contact the dealer from whom you purchased your Invacare product. In the event you do not receive satisfactory warranty service, please write directly to Invacare at the address at the bottom of this page. Provide dealer's name, address, the product model number, date of purchase, indicate nature of the defect and, if the product is serialized, indicate the serial number. Do not return products to our factory without our prior consent.

1 GENERAL

LIMITATIONS AND EXCLUSIONS: THE FOREGOING WARRANTY SHALL NOT APPLY TO SERIAL NUMBERED PRODUCTS IF THE SERIAL NUMBER HAS BEEN REMOVED OR DEFACED, PRODUCTS SUBJECTED TO NEGLIGENCE, ACCIDENT, IMPROPER OPERATION, MAINTENANCE OR STORAGE, PRODUCTS MODIFIED WITHOUT INVACARE'S EXPRESS WRITTEN CONSENT INCLUDING, BUT NOT LIMITED TO, MODIFICATION THROUGH THE USE OF UNAUTHORIZED PARTS OR ATTACHMENTS; PRODUCTS DAMAGED BY REASON OF REPAIRS MADE TO ANY COMPONENT WITHOUT THE SPECIFIC CONSENT OF INVACARE, OR TO A PRODUCT DAMAGED BY CIRCUMSTANCES BEYOND INVACARE'S CONTROL, AND SUCH EVALUATION WILL BE SOLELY DETERMINED BY INVACARE. THE WARRANTY SHALL NOT APPLY TO NORMAL WEAR AND TEAR OR FAILURE TO ADHERE TO THE PRODUCT INSTRUCTIONS.
THE FOREGOING EXPRESS WARRANTY IS EXCLUSIVE AND IN LIEU OF ANY OTHER WARRANTIES WHATSOEVER, WHETHER EXPRESS OR IMPLIED, INCLUDING THE IMPLIED WARRANTIES OF MERCHANTABILITY AND FITNESS FOR A PARTICULAR PURPOSE, AND THE SOLE REMEDY FOR VIOLATIONS OF ANY WARRANTY WHATSOEVER, SHALL BE LIMITED TO REPAIR OR REPLACEMENT OF THE DEFECTIVE PRODUCT PURSUANT TO THE TERMS CONTAINED HEREIN. THE APPLICATION OF ANY IMPLIED WARRANTY WHATSOEVER SHALL NOT EXTEND BEYOND THE DURATION OF THE EXPRESS WARRANTY PROVIDED HEREIN. INVACARE SHALL NOT BE LIABLE FOR ANY CONSEQUENTIAL OR INCIDENTAL DAMAGES WHATSOEVER.
SOME STATES DO NOT ALLOW THE EXCLUSION OR LIMITATION OF INCIDENTAL OR CONSEQUENTIAL DAMAGE, OR LIMITATION OF HOW LONG AN IMPLIED WARRANTY LASTS, SO THE ABOVE EXCLUSION AND LIMITATION MAY NOT BE APPLICABLE.

THIS WARRANTY SHALL BE EXTENDED TO COMPLY WITH STATE/PROVINCIAL LAWS AND REQUIREMENTS.

2 Overview

2.1 Label Locations

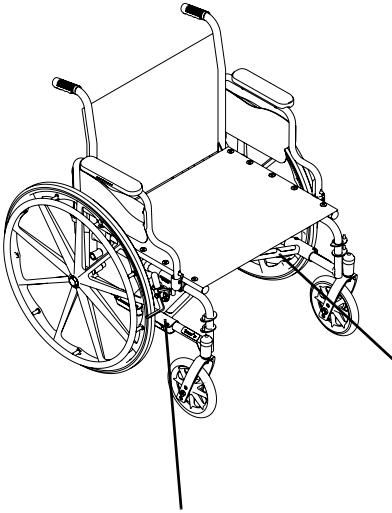

Serial Number Label is located on the cross brace on the left side of the chair

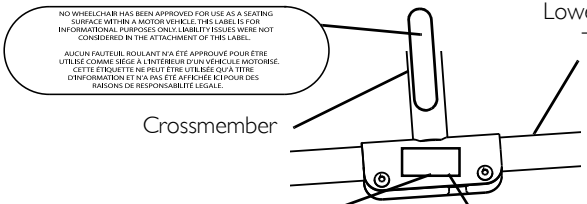

Wheelchairs with Standard Wheel Package

Wheelchairs with Heavy Duty Wheel Package

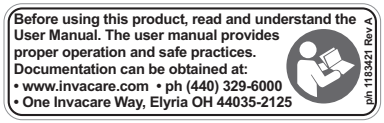

On all adjustable anti-tippers

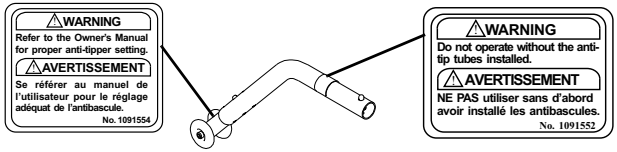

2 OVERVIEW

2.2 Component Identification

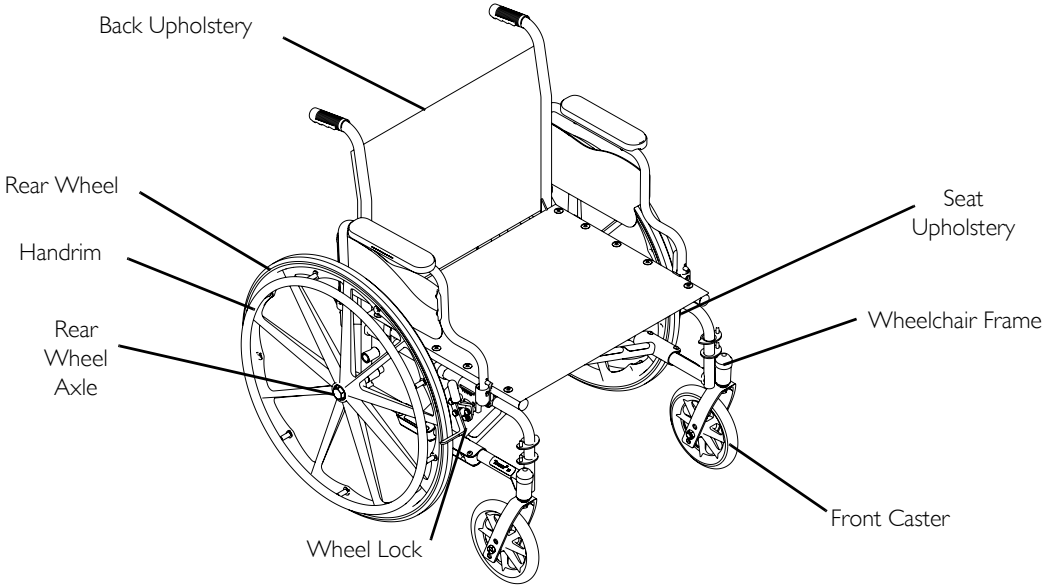

2.3 Specifications

OVERALL WIDTH	$26^1/_4$ to $32^1/_4$ inches
OVERALL DEPTH (WITHOUT RIGGINGS)	$33^1/_2$ inches
SEAT WIDTH	18, 20, 22 or 24 inches
SEAT DEPTH	18 and 20 inches
SEAT-TO-FLOOR**	$19^1/_2$ inches (Adult), $17^1/_2$ inches (Hemi)
BACK STYLE	Fixed
BACK HEIGHT	16 inches
ARM STYLES	Fixed or Adjustable Height; Desk or Full Length; Removable
FRONT RIGGINGS	Swingaway Removable Footrests, Elevating Legrests, and Articulating Elevating Legrests
REAR AXLE	Permanent
REAR WHEELS	24* inch Composite Corded Urethane 24 inch Pneumatic-Flat Free Insert (Heavy Duty Wheel Option)
HANDRIMS	Chrome Plated Steel, Black Painted Steel
WHEEL LOCKS	Push to Lock (Adult), Pull to Lock (Hemi)
CASTER SIZE	8 x $1^1/_4$ inch Urethane 8 x $1^3/_4$ inch Semi Pneumatic
UPHOLSTERY	Vinyl: Midnight Blue, Dove Grey, Ruby, Black, Camel Nylon: Black
WEIGHT* (APPROX.)**	42 pounds

SHIPPING WEIGHT* (APPROX.)**	52 pounds
WEIGHT LIMIT	350 lbs (159 kg); Heavy Duty Option 450 lbs (205 Kgs)

* Heights can vary $^{1}/_{4}$ inch due to wheel options, tire wear, and manufacturing tolerances.

** These options are standard for this model.

*** Weights based on 22 inch wide wheelchair without front riggings. All weights are approximate and will vary depending on how the wheelchair is equipped.

3 Safety

The safety section contains important information for the safe operation and use of this product.

3.1 General Guidelines

WARNING

Risk of Serious Injury or Damage

DO NOT use this product or any available optional equipment without first completely reading and understanding these instructions and any additional instructional material such as owner's manuals, service manuals or instruction sheets supplied with this product or optional equipment. If you are unable to understand the warnings, cautions or instructions, contact a healthcare professional, dealer or technical personnel before attempting to use this equipment - otherwise, injury or damage may occur.

A qualified technician MUST perform the initial set up of this wheelchair. also, a qualified technician must perform all procedures specifically indicated in the manual.

Use of non-Invacare accessories may result in serious injury or damage.

Invacare products are specifically designed and manufactured for use in conjunction with Invacare accessories. Accessories designed by other manufacturers have not been tested by Invacare and are not recommended for use with Invacare products.

DO NOT use non-Invacare accessories.

To obtain Invacare accessories, contact Invacare by phone or at www.invacare.com.

DANGER

Risk of Death, Serious Injury or Damage

Use of incorrect or improper replacement (service) parts may cause death, serious injury, or damage.

Replacement parts MUST match original Invacare parts.

ALWAYS provide the wheelchair serial number to assist in ordering the correct replacement parts.

DANGER

Risk of Death, Serious Injury, or Damage

Lighted cigarettes dropped onto an upholstered seating system can cause a fire resulting in death, serious injury, or damage.

Wheelchair occupants are at particular risk of death or serious injury from these fires and resulting fumes because they may not have the ability to move away from the wheelchair.

DO NOT smoke while using this wheelchair.

NOTICE

THE INFORMATION CONTAINED IN THIS DOCUMENT IS SUBJECT TO CHANGE WITHOUT NOTICE.

Check all parts for shipping damage and test before using. In case of damage, DO NOT use. Contact Invacare/Carrier for further instruction.

3.2 Intended Use

The intended use for the manual (mechanical) wheelchair is to provide mobility to persons who may be restricted to a sitting position. The manual wheelchair is intended for ongoing daily use. The models offer a wide range of customization which allows for a better fit for the end user resulting in comfort, lightweight, easier propelling, transferring, and smooth ride. The manual wheelchair is intended for indoor and outdoor use on firm surfaces free of climbing obstacles. All other uses are prohibited.

3.3 Wear and Tear Items

Normal wear and tear items and components include but are not limited to: all upholstery items including seat and back upholstery, arm and calf pads, cushions, wheels, tires and casters.

Invacare reserves the right to ask for any item back that has an alleged defect in workmanship. See Warranty policy shipped with the product for specific warranty information.

Refer to User Manual for proper preventative maintenance schedule and use of the product.

This is just a general guideline and does not include items damaged due to abuse and misuse.

PRODUCT TYPE	PRODUCT WEAR AND TEAR PART
WHEELCHAIRS:	Wheels • Brake Assembly/Wheel Locks • Hand grips
UPHOLSTERY AND SEATING:	Arm Pads • Seat Cushion Foam • Seat Cushion Covers • Back Cushion Foam • Back Cushion Covers • Headrest Foam • Headrest Covers • Footplate Covers • Calf Pad (if applicable) Foam and Cover

3.4 Operating Information

General Warnings

WARNING

To determine and establish your particular safety limits, practice bending, reaching and transferring activities in several combinations in the presence of a qualified healthcare professional before attempting active use of the wheelchair.

Avoid storing or using the wheelchair near open flame or combustible products. Serious injury or damage to property may result.

DO NOT stand on the frame of the wheelchair.

DO NOT use the footplate as a platform. When getting in or out of the wheelchair, make sure that the footplates are in the upward position.

ALWAYS use the handrims for self-propulsion. Inasmuch as the handrims are an option on this wheelchair (you may order with or without the handrims), Invacare strongly recommends ordering the handrims as an additional safeguard for the wheelchair user.

DO NOT operate on roads, streets or highways.

DO NOT allow children to play on or operate the wheelchair.

DO NOT operate on soft surfaces such as sand, grass, or gravel.

Hand Grips

WARNING

ALWAYS check hand grips for looseness before using the wheelchair. If loose and/or worn, replace IMMEDIATELY.

When cleaning rear cane or hand grip areas use only a clean towel lightly dampened with cool water. Verify that grips are dry prior to use. Use of soap or ammonia based cleaning solutions will result in the hand grips sliding off the cane assembly. Failure to observe this warning may result in injury to the user or bystanders.

If the wheelchair is exposed to extreme temperature (above 100°F or below 32°F), high humidity and/or becomes wet, prior to use, ensure that the handgrips DO NOT twist on the handle. Otherwise, damage or injury may occur.

Seat Positioning Straps

WARNING

ALWAYS wear your seat positioning strap. Inasmuch as the seat positioning strap is an option on this wheelchair (you may order with or without the seat positioning strap), Invacare strongly recommends ordering the seat positioning strap as an additional safeguard for the wheelchair user. The seat positioning strap is a positioning strap only. It is not designed for use as a safety device withstanding high stress loads such as auto or aircraft safety belts. If signs of wear appear, strap MUST be replaced IMMEDIATELY.

With regards to seat/chest positioning straps - it is the obligation of the DME dealer, therapists and other healthcare professionals to determine if a seat/chest positioning strap is required to ensure the safe operation of this equipment by the user. Serious injury can occur in the event of a fall from a wheelchair.

Wheel Locks

WARNING

DO NOT attempt to stop a moving wheelchair with wheel locks. Wheel locks are not brakes.

If the wheelchair is equipped with push to lock wheel locks, elevating legrests, and wheel lock extension handles, the wheel lock extension handles MUST be removed before swinging the elevating legrests to the side, otherwise injury or damage may result. Interference between the top of the elevating legrest and the wheel lock extension handle may cause the wheel lock to disengage.

Engaging the wheel locks may not prevent the wheelchair from moving on all floor surfaces including those that may be wet or slick. ALWAYS exercise caution when transferring into or out of the wheelchair.

Anti-Tippers

WARNING

Anti-tippers are specific to the different seat-to-floor angles and/or seat-to-floor heights. Refer to the charts in Installing/Adjusting Anti-tippers on page 52 for correct usage and adjustment. If these requirements cannot be achieved, DO NOT use the wheelchair. Contact a qualified technician. If changing the seat-to-floor height with or without a change to seat-to-floor angle, the correct anti-tippers must be used to maintain a $1\frac{1}{2}$ to 2 inch ground clearance.

Inasmuch as the anti-tippers are an option on this wheelchair (you may order with or without the anti-tippers), Invacare strongly recommends ordering the anti-tippers as an additional safeguard for the wheelchair user.

Invacare strongly recommends that anti-tippers be used at all times.

Anti-tippers MUST be fully engaged and release buttons fully protruding out of the adjustment holes.

Ensure both anti-tippers are adjusted to the same mounting hole.

The manual wheelchair is intended for indoor and outdoor use on firm surfaces. When outdoors on wet, soft ground or on gravel surfaces, anti-tippers may not provide the same level of protection against tip over. DO NOT operate on soft surfaces such as sand, grass or gravel.

Wheelchair Tie Down Restraints

WARNING

Wheelchair users should NOT be transported in vehicles of any kind while in wheelchairs. As of this date, the Department of Transportation has not approved any tie-down systems for transportation of a user while in a wheelchair, in a moving vehicle of any type.

It is Invacare's position that users of wheelchairs should be transferred into appropriate seating in vehicles for transportation and use be made of the restraints made available by the auto industry. Invacare cannot and does not recommend any wheelchair transportation systems.

Lifting

WARNING

DO NOT attempt to lift the wheelchair by any removable (detachable) parts. Lifting by means of any removable (detachable) parts of the wheelchair may result in injury to the user or damage to the wheelchair.

Ramps, Slopes, Inclines, and Obstacles

WARNING

DO NOT traverse, climb or go down ramps or slopes greater than 9°.

DO NOT attempt to move up or down an incline with a water, ice or oil film.

DO NOT attempt to ride over curbs or obstacles. Doing so may cause your wheelchair to tip over and cause bodily harm to you or damage to the wheelchair.

NEVER leave an unoccupied wheelchair on an incline.

DO NOT attempt tp stop the wheelchair while on a sloped surface.

Weight Limitation

WARNING

The Tracer IV wheelchair with standard wheel package has a weight limitation of 350 lbs (159 kg). The Tracer IV wheelchair with the heavy duty wheel package has a weight limitation of 450 lbs (205 kg.).

Weight Training

WARNING

Invacare does not recommend the use of its wheelchairs as a weight training apparatus. Invacare wheelchairs have not been designed or tested as a seat for any kind of weight training. If occupant uses said wheelchair as a weight training apparatus, Invacare shall not be liable for bodily injury or damage to the wheelchair and the warranty is void.

Storage

WARNING

Risk of Serious Injury or Damage

Storing or using the wheelchair near open flame or combustible products can result in serious injury or damage.

Avoid storing or using the wheelchair near open flame or combustible products.

Storing the wheelchair in a damp area or when wet may cause rust or corrosion of wheelchair parts resulting in injury or damage.

DO NOT use the wheelchair in a shower, pool or other body of water.

DO NOT store the wheelchair in a damp or humid area.

Avoid extreme weather such as rain or snow when possible.

Avoid excessive moisture or humidity.

If exposed to water, dry the wheelchair as soon as possible.

Repair or Service Information

WARNING

Unless otherwise noted, all service and adjustment should be performed while the wheelchair is unoccupied.

After ANY adjustments, repair or service and before use, make sure all attaching hardware is tightened securely - otherwise injury or damage may result.

Stability All Models

WARNING

The seat depth, size/position of the front casters, size/position of the rear wheels, use of anti-tipper model, as well as the user condition directly relate to the stability of the wheelchair. Any change to one or any combination of the seven may cause the wheelchair to decrease in stability. These adjustments MUST be performed by a qualified technician.

The various seat-to-floor heights require specific settings depending on rear wheel size, rear wheel position, front caster size/position and desired seat-to-floor angle. These adjustments MUST be performed by a qualified technician.

When changes to the left hand column occur, follow across the chart and refer to the procedure that is checked (✓) to maintain the proper stability, safety and handling of the wheelchair.	CASTER SIZE	CASTER POSITION	WHEEL SIZE	WHEEL POSITION	ANTI-TIPPERS	USER CONDITION
CASTER SIZE	•	✓	✓	✓	✓	✓
CASTER POSITION	✓	•	✓	✓	✓	✓
WHEEL SIZE	✓	✓	•	✓	✓	✓
WHEEL POSITION	✓	✓	✓	•	✓	✓
ANTI-TIPPERS	✓	✓	✓	✓	•	✓
USER CONDITION	✓	✓	✓	✓	✓	•

Information for Healthcare Professionals/Assistants

WARNING

When assistance to the wheelchair user is required, remember to use good body mechanics. Keep your back straight and bend your knees whenever tipping the wheelchair or traversing curbs, or other impediments.

When learning a new assistance technique, have an experienced assistant help you before attempting it alone.

Wheelchair User

WARNING

As a manufacturer of wheelchairs, Invacare endeavors to supply a wide variety of wheelchairs to meet many needs of the end user. However, final selection of the type of wheelchair to be used by an individual rests solely with the user and his/her healthcare professional capable of making such a selection.

3.5 Safety/Handling of Wheelchairs

Safety and handling of the wheelchair require the close attention of the wheelchair user as well as the assistant. This manual points out the most common procedures and techniques involved in the safe operation and maintenance of the wheelchair. It is important to practice and master these safe techniques until you are comfortable in maneuvering around the frequently encountered architectural barriers.

Use this information only as a basic guide. The techniques that are discussed on the following pages have been used successfully by many.

Individual wheelchair users often develop skills to deal with daily living activities that may differ from those described in this manual. Invacare recognizes and encourages each individual to try what works best for him/her in overcoming architectural obstacles that they may encounter. However, all warnings and cautions given in this manual MUST be heeded. Techniques in this manual are a starting point for the new wheelchair user and assistant with safety as the most important consideration for all.

Stability and Balance

WARNING

Be aware that carrying heavy objects on your lap while occupying the wheelchair may adversely affect the stability of the wheelchair, resulting in serious bodily injury to the user, damage to the wheelchair and surrounding property.

This wheelchair has been designed to accommodate one individual. If more than one individual occupies the wheelchair this may adversely affect the stability of the wheelchair, resulting in serious bodily injury to the user and passenger and damage to the wheelchair and surrounding property.

To assure stability and proper operation of your wheelchair, you MUST maintain proper balance at all times. Your wheelchair has been designed to remain upright and stable during normal daily activities as long as you DO NOT move beyond the center of gravity.

Virtually all activities which involve movement in the wheelchair have an effect on the center of gravity. Invacare recommends using seat/chest positioning straps for additional safety while involved in activities that shift your weight.

DO NOT lean forward out of the wheelchair any further than the length of the armrests. Make sure the casters are pointing in the forward position whenever you lean forward. This can be achieved by advancing the wheelchair and then reversing it in a straight line.

Many activities require the wheelchair owner to reach, bend and transfer in and out of the wheelchair. These movements will cause a change to the normal balance, the center of gravity, and the weight distribution of the wheelchair. To determine and establish your particular safety limits, practice bending, reaching and transferring activities in several combinations in the presence of a qualified healthcare professional before attempting active use of the wheelchair.

Proper positioning is essential for your safety. When reaching, leaning, or bending forward, it is important to use the front casters as a tool to maintain stability and balance.

Reaching, Leaning and Bending

WARNING

DO NOT shift your weight or sitting position toward direction you are reaching as the wheelchair may tip over.

DO NOT attempt to reach objects if you have to move forward in the seat or pick them up from the floor by reaching down between your knees.

DO NOT lean over the top of the back upholstery to reach objects behind you, as this may cause the wheelchair to tip over.

Forward

Position the front casters so that they are extended as far forward as possible and engage wheel locks.

Backwards

Position wheelchair as close as possible to the desired object. Point front casters forward to create the longest possible wheelbase. Reach back only as far as your arm will extend without changing your sitting position.

FIGURE 1 Reaching, Leaning and Bending - Forward/Backward

Coping With Everyday Obstacles

Coping with the irritation of everyday obstacles can be alleviated somewhat by learning how to manage your wheelchair. Keep in mind your center of gravity to maintain stability and balance.

Tipping

WARNING

DO NOT tip the wheelchair without assistance.

When lowering the front casters of the wheelchair, Do not let the wheelchair drop the last few inches to the ground. This could result in injury to the occupant and/or damage to the wheelchair.

1. When tipping the wheelchair, an assistant should grasp the back of the wheelchair on a non-removable (non-detachable) part. Inform the wheelchair occupant before tipping the wheelchair and remind him/her to lean back. Be sure the occupant's feet and hands are clear of all wheels and/or pinch points.
2. After mastering the techniques of tipping the wheelchair, use one of the following methods to tackle curbs, short stairs, etc.
3. DO NOT allow the user to leave the wheelchair while the seat is tilted. ALWAYS return the seat to upright position when transferring the user in or out of the wheelchair.

Method 1 - Wheelchair With Step Tubes

Place foot on the step tube and begin to tilt the wheelchair toward you. Apply a continuous downward motion until the balance point is achieved and the front casters clear the curb. At this point, the assistant will feel a difference in the weight distribution.

Roll the wheelchair forward and slowly lower the front of the wheelchair in one continuous movement onto the sidewalk. Push the wheelchair forward until the rear wheels roll up and over the curb.

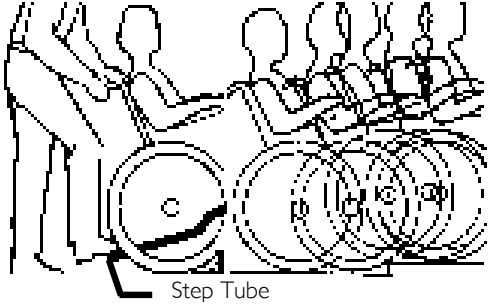

FIGURE 2 Method 1 - Wheelchair With Step Tubes

Method 2 - Wheelchair Without Step Tubes

This method requires two assistants. The second assistant should be positioned at the front of the wheelchair lifting upward on a non-removable (non-detachable) part of the wheelchair frame when lifting the wheelchair and stabilizing the wheelchair when the wheelchair is being lowered to the ground.

The first assistant should stand on the sidewalk and turn the wheelchair so that the rear wheels are against the curb. Turn the anti-tippers so the anti-tip wheels are pointing up. The wheelchair should be tilted back to the balance point and, in one continuous upward movement, the rear wheels should be pulled up and over the curb. DO NOT return the front casters to the ground until the wheelchair has been pulled backward far enough for the front casters to clear the edge of the curb.

Roll the wheelchair backward and slowly lower the wheelchair in one continuous movement. Turn the anti-tippers so the anti-tip wheels are facing down.

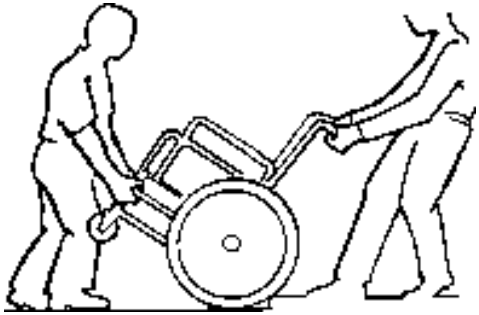

FIGURE 3 Method 2 - Wheelchair Without Step Tubes

Stairways

WARNING

Extreme caution is advised when it is necessary to move an occupied wheelchair up or down the stairs. Invacare recommends that, if possible, the user be removed from the wheelchair prior to moving. Invacare recommends using two assistants and making thorough preparations. Make sure to use only secure, non-detachable parts for hand-held supports.

Follow this procedure for moving the wheelchair between floors when an elevator is not available:

Moving Up Stairs

1. If necessary, rotate the anti-tippers so the wheels are facing up.
2. One assistant (positioned behind the wheelchair), securely grasps a non-removable (non-detachable) part of the wheelchair for leverage and tilts the wheelchair back to the balance point.

3. After the wheelchair has been tilted back to the balance point, the assistant behind the wheelchair backs the wheelchair up against the first step.
4. The second assistant (positioned in the front of the wheelchair), with a firm hold on a non-detachable part of the framework, lifts the wheelchair up and on to the next stair above and steadies the wheelchair as the assistant behind the wheelchair places one foot on the next stair above and repeats process.
5. The wheelchair should not be lowered until the last stair has been negotiated and the wheelchair has been rolled away from the stairway.
6. If necessary, rotate the anti-tippers so the wheels are facing down.

Moving Down Stairs

1. If necessary, rotate the anti-tippers so the wheels are facing up.
2. One assistant (positioned behind the wheelchair), securely grasps a non-removable (non-detachable) part of the wheelchair for leverage and tilts the wheelchair back to the balance point.
3. After the wheelchair has been tilted back to the balance point, the assistant behind the wheelchair rolls the wheelchair up to the edge of the first step.
4. The second assistant (positioned in the front of the wheelchair), with a firm hold on a non-detachable part of the framework, lowers the wheelchair down and on to the next stair below and steadies the wheelchair as the assistant in the rear places one foot on the next stair below and repeats process.
5. The wheelchair should not be lowered until the last stair has been negotiated and the wheelchair has been rolled away from the stairway.
6. If necessary, rotate the anti-tippers so the wheels are facing down.

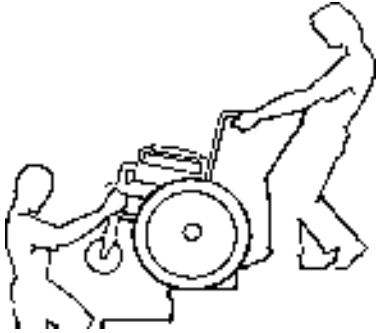

FIGURE 4 Stairways

Escalators

WARNING

DO NOT use an escalator to move a wheelchair between floors. Serious bodily injury may occur.

Transferring To and From Other Seats

WARNING

Before attempting to transfer in or out of the wheelchair, every precaution should be taken to reduce the gap distance. Turn both casters parallel to the object you are transferring onto. Also be certain the wheel locks are engaged to help prevent the wheels from moving.

Wheelchairs with adjustable height armrests only: Adjust armrests to lowest position prior to transferring into or out of wheelchair - otherwise injury or damage may occur.

CAUTION

When transferring, position yourself as far back as possible in the seat. This will help prevent damaged upholstery and the possibility of the wheelchair tipping forward.

This activity may be performed independently provided you have adequate mobility and upper body strength.

Position the wheelchair as close as possible alongside the seat to which you are transferring, with the front casters pointing parallel to it. Remove or flip up the armrest. Engage wheel locks. Swing away or remove front rigging. Shift body weight into seat with transfer.

During independent transfer, little or no seat platform will be beneath you. Use a transfer board if at all possible.

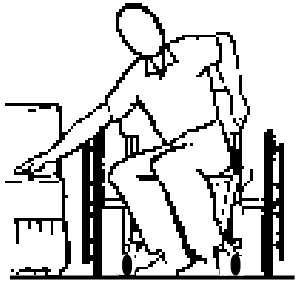

FIGURE 5 Transferring To and From Other Seats

4 Safety Inspection

Every six months or as necessary, take your wheelchair to a qualified technician for a thorough inspection and servicing. Regular cleaning will reveal loose or worn parts and enhance the smooth operation of your wheelchair. To operate properly and safely, your wheelchair MUST be cared for just like any other vehicle. Routine maintenance will extend the life and efficiency of your wheelchair

4.1 Safety Inspection Checklist

Initial adjustments should be made to suit your personal body structure and preference. Thereafter follow these maintenance procedures:

Inspect/Adjust Initially

- ❑ Ensure that the wheelchair rolls straight (no excessive drag or pull to one side).
- ❑ Inspect for loose or missing hardware on frame and crossbraces.
- ❑ Inspect for rough/sharp edges on frame and crossbraces.
- ❑ Inspect for bent frame or crossbraces.
- ❑ Check that the wheel locks DO NOT interfere with tires when rolling.
- ❑ Check that the wheel lock pivot points are free of wear and looseness.
- ❑ Check that the wheel locks are easy to engage.
- ❑ Ensure that the wheel locks prevent the wheelchair from moving when engaged.
- ❑ Inspect the seat and back for rips and sagging.
- ❑ Inspect the seat and back for loose or broken hardware.
- ❑ Inspect the back cane hand grips for wear/looseness/deterioration.
- ❑ Inspect seat positioning strap for any signs of wear. Ensure buckle latches. Verify hardware that attaches strap to frame is secure and undamaged. Replace if necessary.
- ❑ Inspect tires for flat spots and wear.

- ❑ Check pneumatic tires for proper inflation.

CAUTION

As with any vehicle, check the wheels and tires periodically for cracks and wear. Replace if damaged.

- ❑ Check that there is no excessive side movement or binding in the rear wheels when lifted and spun.
- ❑ Inspect rear wheels for cracked, bent or broken spokes.
- ❑ Adjust rear wheel bearing system if wheel wobbles noticeably or binds to a stop.
- ❑ Ensure rear wheel bearings are clean and free of moisture.
- ❑ Ensure all spokes are uniformly tight.
- ❑ Inspect handrims for signs of rough edges or peeling.
- ❑ Inspect handrims for loose or missing hardware.
- ❑ Inspect axle assembly for proper tension by spinning caster. Caster should come to a gradual stop.
- ❑ Adjust front casters/forks bearing system if wheel wobbles noticeably or binds to a stop.
- ❑ Ensure wheel bearings are clean and free of moisture.
- ❑ Check headtube locknuts for tightness.
- ❑ Check headtube bearings for wear.
- ❑ Inspect casters for cracks and wear.
- ❑ Inspect front casters for cracked, bent or broken spokes.

CAUTION

Damage from Bleach

Clean upholstery with mild soap and water or spray disinfectant using a sponge. DO NOT use bleach or wash in a washing machine.

- ❑ Clean upholstery and armrests with mild soap and water.
- ❑ Check that all labels are present and legible. Replace if necessary.

Inspect/Adjust Weekly

- ❑ Inspect tires for flat spots and wear.
- ❑ Check pneumatic tires for proper inflation.
- ❑ Inspect rear wheels for cracked, bent or broken spokes.
- ❑ Ensure all spokes are uniformly tight.
- ❑ Inspect axle assembly for proper tension by spinning caster. Caster should come to a gradual stop.
- ❑ Check headtube locknuts for tightness.
- ❑ Check headtube bearings for wear.
- ❑ Inspect casters for cracks and wear.
- ❑ Inspect front casters for cracked, bent or broken spokes.

Inspect/Adjust Monthly

- ❑ Check that the wheel locks DO NOT interfere with tires when rolling.
- ❑ Check that the wheel lock pivot points are free of wear and looseness.
- ❑ Inspect seat and back for loose or broken hardware.
- ❑ Inspect seat positioning strap for any signs of wear. Ensure buckle latches. Verify hardware that attaches strap to frame is secure and undamaged. Replace if necessary.
- ❑ Inspect back cane hand grips for wear/looseness/deterioration.
- ❑ Adjust rear wheel bearing system if wheel wobbles noticeably or binds to a stop.
- ❑ Ensure rear wheel bearings are clean and free of moisture.
- ❑ Adjust front casters/forks bearing system if wheel wobbles noticeably or binds to a stop.
- ❑ Ensure wheel bearings are clean and free of moisture.

4 SAFETY INSPECTION

Inspect/Adjust Periodically

- ❑ Ensure that the wheelchair rolls straight (no excessive drag or pull to one side).
- ❑ Inspect frame and crossbraces for loose or missing hardware.
- ❑ Inspect for bent frame or crossbraces.
- ❑ Inspect for rough/sharp edges on frame and crossbraces.
- ❑ Ensure that the casters are free of debris.
- ❑ Check that wheel locks are easy to engage.
- ❑ Inspect seat and backs for rips and sagging.
- ❑ Check that there is no excessive side movement or binding in the rear wheels when lifted and spun.
- ❑ Inspect handrims for signs of rough edges or peeling.
- ❑ Inspect handrims for loose or missing hardware.
- ❑ Ensure wheel bearings are clean and free of moisture.
- ❑ Clean upholstery and armrests with mild soap and water.
- ❑ Check that all labels are present and legible. Replace if necessary.

5 Operation

5.1 Unfolding and Folding Wheelchair

WARNING

ALWAYS keep hands and fingers clear of moving parts to avoid injury.

DO NOT place hand or fingers on the underside of the seat frame rail when opening or closing the wheelchair.

DO NOT sit or transfer into the wheelchair unless it is fully open and the seat frame rails are fully seated into the side frame H-blocks.

Invacare recommends that a non-folding device be installed to keep the wheelchair from being folded when left unoccupied in a public place.

Unfolding

For this procedure, refer to FIGURE 1 on page 34.

1. Tilt the wheelchair toward you (raising the opposite wheel and caster off the ground/floor).
2. Place your hand on the top of the seat rail closest to you where the seat upholstery is attached.
3. Point your fingers and thumb to the inside of the wheelchair.
4. Press downward on the top of the seat rail until the wheelchair is fully open and the seat rails are fully seated in the H-blocks.
5. Engage both wheel locks, open the footrest/legrest for clearance and transfer into the wheelchair. Refer to Transferring To and From Other Seats on page 28.

DO NOT wrap thumb or fingers under the seat rail. Point fingers and thumb to the inside of the wheelchair.

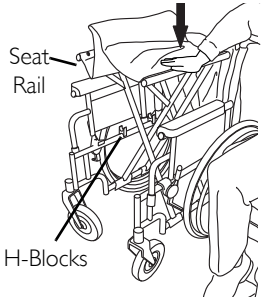

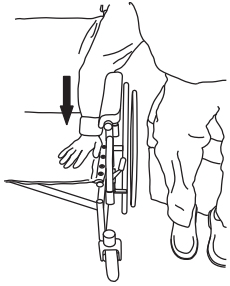

Press down on the seat rail and the seat upholstery with the entire hand. DO NOT place any part of the hand under the seat rail.

FIGURE 1 Unfolding

Folding Wheelchair

1. Swing footrest/legrest in locked position to front of the wheelchair.
2. Pivot footplates upward to vertical position.
3. With both hands, grasp the middle of the seat upholstery at the front and back edge and lift up.

CAUTION

DO NOT allow upholstery to hang between the cross braces.

4. Continue to close the wheelchair by grasping the armrest furthest from you and pulling the armrest toward you.

If the wheelchair is equipped with carry straps, the wheelchair may be closed by pulling up on the straps.

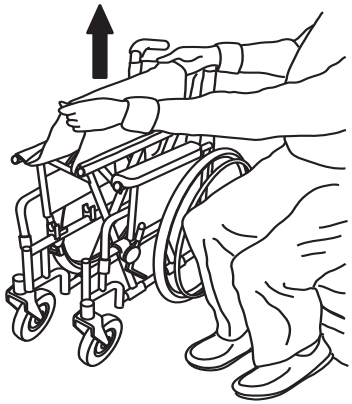

FIGURE 2 Folding Wheelchair

5.2 Using Patient Operated Wheel Locks

WARNING

DO NOT attempt to stop a moving wheelchair with wheel locks. Wheel locks are not brakes.

If the wheelchair is equipped with push to lock wheel locks, elevating legrests, and wheel lock extension handles, the wheel lock extension handles MUST be removed before swinging the elevating legrests to the side, otherwise injury or damage may result. Interference between the top of the elevating legrest and the wheel lock extension handle may cause the wheel lock to disengage.

Position wheelchair on a flat, level surface to perform this procedure.

1. Ensure the wheelchair is not moving before engaging the wheel locks.
2. Perform one of the following:
   - Push-to-Lock - To engage, push the wheel lock handle forward.
   - Pull-to-Lock - To engage, pull the wheel lock handle backward.
3. Disengage the wheel locks by reversing STEP 2.

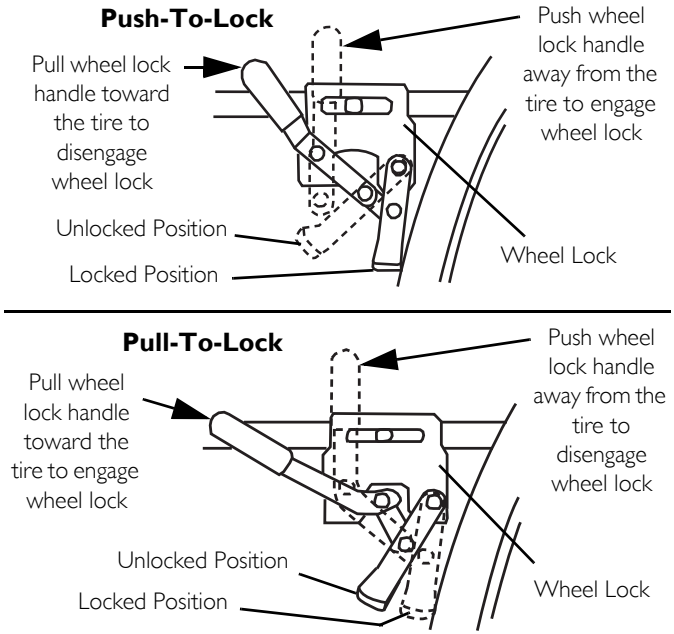

FIGURE 3 Using Patient Operated Wheel Locks

5.3 Installing/Removing Front Riggings

Installing

1. Turn the front rigging assembly to the side.
2. Install the hinge plates on the front rigging assembly onto the hinge pins on the wheelchair frame.

   When performing STEP 3, it may be necessary to pull release lever toward front of chair to assist the front rigging to lock in place.

3. Push the front rigging assembly towards the inside of the wheelchair until it locks into place.

   The footplate will be on the inside of the wheelchair when locked in place.

4. Repeat this procedure for the other front rigging assembly.
5. To release the front rigging, push the front rigging release lever inward, rotate front rigging outward.

Removing

1. Push the front rigging release lever inward.
2. Rotate swingaway front rigging assembly outward.
3. Lift the swingaway front rigging assembly off the hinge pins.

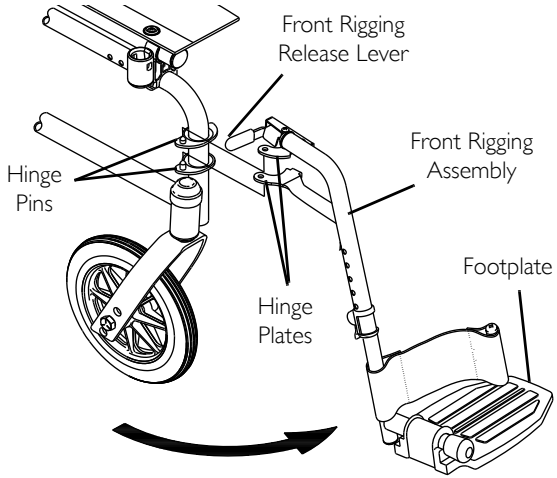

Swingaway footrest shown

FIGURE 4 Installing/Removing Front Riggings

5.4Raising/Lowering Elevating Legrest Assembly

WARNING

Ensure hands and fingers are clear of elevating legrest mechanism before pushing release lever to lower the elevating legrest. Otherwise injury may occur due to pinch points.

The wheelchair user's leg MUST be supported by an assistant before attempting to lower legrest.

1. To raise the elevating legrest, the assistant should hold the support tube and raise the elevating legrest until the desired height is obtained.
2. To lower the elevating legrest, perform the following:
   A. Support user leg with one hand.
   B. Push release lever downward with other hand.
   C. Gently, lower user leg down and rest against the legrest.

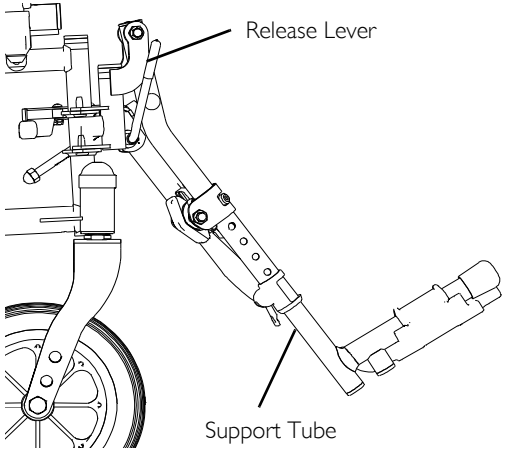

FIGURE 5 Raising/Lowering Elevating Legrest Assembly

5.5 Removing/Installing Armrests

WARNING

Make sure the armrest release lever is in the locked position before using the wheelchair.

This procedure applies to wheelchairs with removable arm only.

Fixed height armrests are standard. Adjustable armrests are optional.

Removing Armrest

1. Push down on armrest to ensure it is fully seated in front and rear sockets.

   STEP 1 prevents the release buttons from hanging up on the sockets during removal.

2. Unlock the rear armrest by rotating the armrest release lever towards the inside of the wheelchair.
3. Press in the armrest release button at the front of the armrest.
4. While pressing in the armrest release button, remove the armrest from the arm sockets by pulling straight up.

Installing Armrest

Rear armrest release lever MUST be in the unlocked position when installing the armrest.

1. Position the armrest just above the front and rear arm sockets.
2. Push arm down evenly at the front and rear until the front armrest release button snaps into the front arm socket.
3. Lock rear armrest by turning the armrest release lever towards the outside of the wheelchair.
4. Ensure armrest is locked securely in the arm sockets by gently lifting up. If not locked, repeat STEPS 1-3.

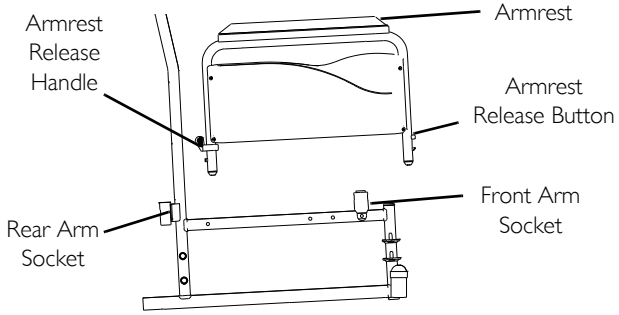

FIGURE 6 Removing/Installing Armrests

5.6 Installing the Anti-tippers

WARNING

Anti-tippers are specific to the different seat-to-floor angles and/or seat-to-floor heights. Refer to tthis procedure of the manual for correct usage and adjustment. If these requirements cannot be achieved, DO NOT use the wheelchair. Contact a qualified technician. If changing the seat-to-floor height with or without a change to seat-to-floor angle, the correct anti-tippers must be used to maintain a $1\,^{1}/_{2}$ to 2 inch ground clearance.

Inasmuch as the anti-tippers are an option on this wheelchair (you may order with or without the anti-tippers), Invacare strongly recommends ordering the anti-tippers as an additional safeguard for the wheelchair user.

Invacare strongly recommends that anti-tippers be used at all times.

Anti-tippers MUST be fully engaged and release buttons fully protruding out of the adjustment holes.

Ensure both anti-tippers are adjusted to the same mounting hole.

The manual wheelchair is intended for indoor and outdoor use on firm surfaces. When outdoors on wet, soft ground or on gravel surfaces, anti-tippers may not provide the same level of protection against tip over. DO NOT operate on soft surfaces such as sand, grass or gravel.

For this procedure, refer to FIGURE 7 on page 40.

1. Press the release buttons and insert the anti-tippers with the anti-tipper wheels pointing toward the ground/floor into the wheelchair frame tubing.
2. Ensure that the release button of the anti-tipper fully protrudes out of the hole in the bottom of the wheelchair frame tubing.
3. Place the wheelchair on a flat surface.
4. Measure the distance between the bottom of the anti-tipper wheels and the ground/floor.

   A $1\frac{1}{2}$ to 2 inch clearance between the bottom of the anti-tipper wheels and the ground/floor MUST be maintained at all times.

5. If the distance between the bottom of anti-tipper wheels and the ground/floor is not $1\frac{1}{2}$ to 2-inches, adjust anti-tippers. Refer to Adjusting Anti-tippers on page 47.

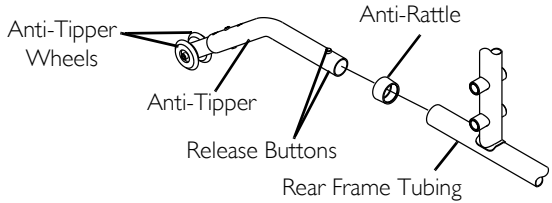

FIGURE 7 Installing the Anti-tippers

5.7 Installing H-Strap/Calf Strap

1. Remove H-strap/calf strap from packaged container if not already secured to the footrest.
2. Secure one side of the H-strap/calf strap around each footrest.

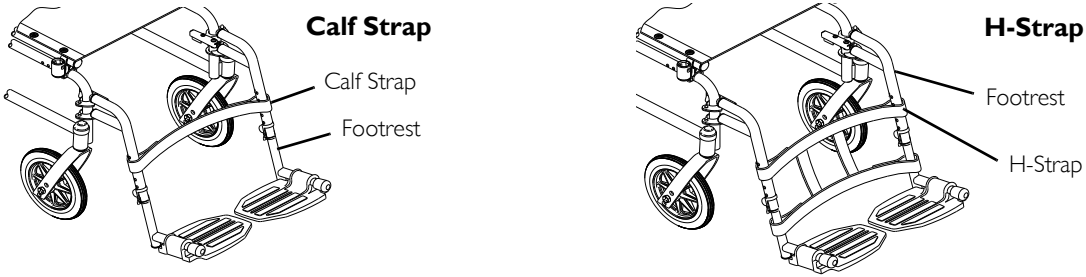

FIGURE 8 Installing H-Strap/Calf Strap

5.8 Installing the Optional Wheel Lock Extension Handle

WARNING

If the wheelchair is equipped with push to lock wheel locks, elevating legrests, and wheel lock extension handles, the wheel lock extension handles MUST be removed before swinging the elevating legrests to the side, otherwise injury or damage may result. Interference between the top of the elevating legrest and the wheel lock extension handle causes the wheel lock to disengage.

1. Remove the existing rubber tip from the wheel lock handle (Detail "A").
2. Install the extension handle over the wheel lock handle (Detail "B").

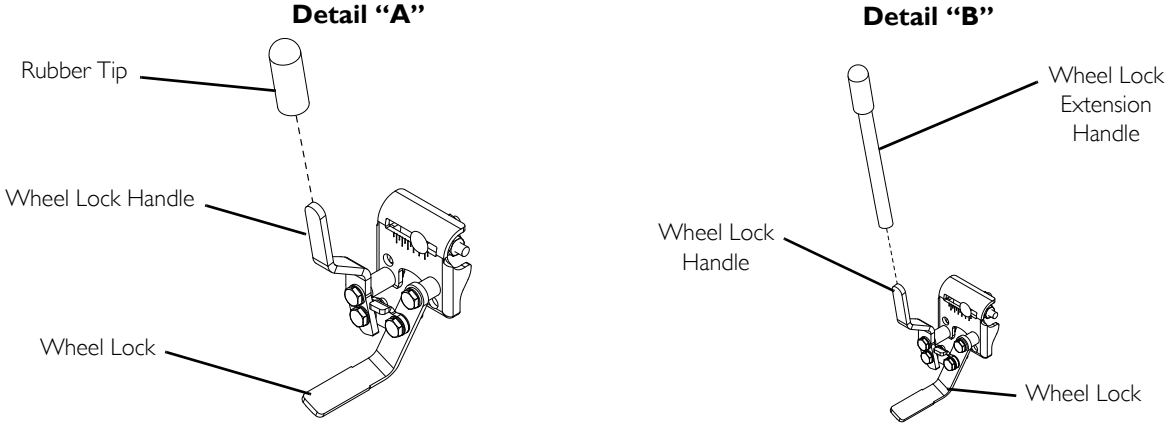

FIGURE 9 Installing the Optional Wheel Lock Extension Handle

6 Adjustment

WARNING

After any adjustments, repair or service and before use, make sure all attaching hardware is tightened securely. Otherwise injury or damage may occur.

6.1 Adjusting Patient Operated Wheel Locks

WARNING

DO NOT attempt to stop a moving wheelchair with wheel locks. Wheel locks are not brakes.

If wheel locks DO NOT hold the occupied wheelchair in place, contact a qualified technician; otherwise injury or damage may occur.

For this procedure, refer to FIGURE 1 on page 43.

If wheels are pneumatic, before adjusting the wheel lock assemblies, ensure that the tires are inflated to the recommended psi on the side wall of tire.

1. Ensure the wheel lock is in the open (unlocked) position.
2. Loosen the bolt and locknut that secure the wheel lock assembly to the wheelchair frame.
3. Reposition the wheel lock so that when engaged, the wheel lock shoe embeds the tire $^{1}/_{8}$ inch ($^{3}/_{16}$ inch for pneumatic tires) and holds the wheelchair.
4. Securely tighten the bolt and locknut securing the wheel lock to the wheelchair frame.
5. Engage the wheel lock.

6. Measure the distance the wheel lock is embedded into the tire as shown in Detail "A".

   Any wheel lock adjustment should embed the wheel lock shoe at least $^{1}/_{8}$ inch ($^{3}/_{16}$ inch for pneumatic tires) into the tire when engaged.

7. Repeat the STEPS 1-6 until the wheel lock shoe embeds the tire 1/8-inch (3/16-inch for pneumatic tires) and holds the wheelchair.
8. If the measurement of $^{1}/_{8}$ inch ($^{3}/_{16}$ inch for pneumatic tires) cannot be achieved, it may be necessary to install wheel lock shoe extensions. Contact a dealer/qualified technician.
9. Repeat STEPS 1-8 for the opposite wheel lock.
10. Engage both wheel locks and ensure the occupied wheelchair is held in place when pushed.

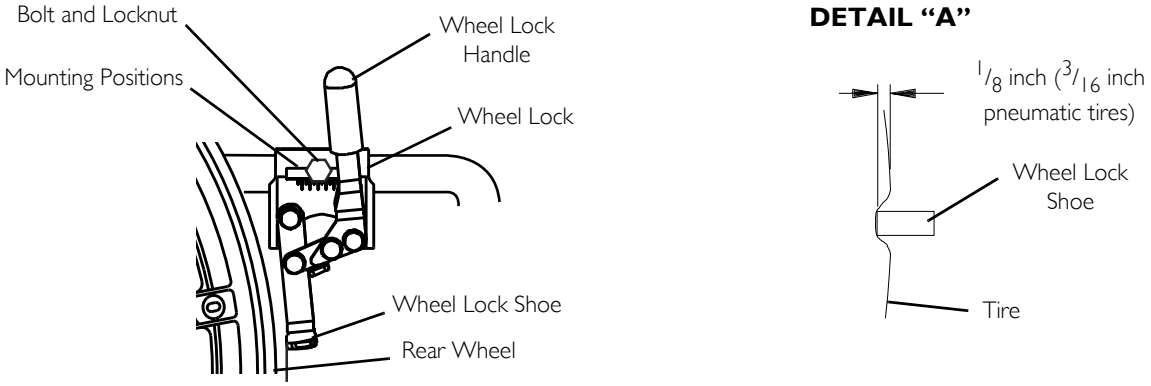

FIGURE 1 Adjusting Patient Operated Wheel Locks

6.2 Adjusting Footplate Height

Spring Button Height

This procedure applies to the swingaway front riggings and swingaway elevating legrest.

1. Remove the front rigging assembly. Refer to Installing/Removing Front Riggings on page 36.

   Lay the front rigging assembly on a flat surface to simplify this procedure.

2. Pull the cam lock lever up to unlocked position.

   The elevating legrest has two sets of release buttons, one set above the other. Each set will be visible one at a time allowing finer footplate height adjustment.

3. Push in the release buttons and reposition the footplate assembly to the desired height.
4. Ensure that the release buttons fully protrude from holes on both sides of the front rigging support.
5. Rotate cam lock lever down to locked position.
6. Repeat this procedure for the other footplate, if necessary.
7. Reinstall the swingaway front rigging assembly. Refer to Installing/Removing Front Riggings on page 36.

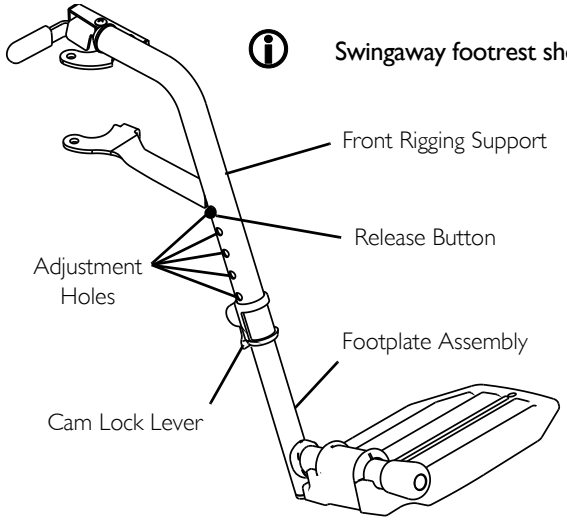

FIGURE 2 Spring Button Height

Bolt-In-Place Height

This procedure applies to the swingaway footrests and swingaway elevating legrest.

1. Remove the swingaway front rigging. Refer to Installing/Removing Front Riggings on page 36.

   Lay the front rigging assembly on a flat surface to simplify this procedure.

2. Pull the cam lock lever up to the unlocked position.
3. Using a screw driver to hold the threaded rivet in position, remove the button head screw from the threaded rivet.
4. Remove the threaded rivet and button head screw securing the footplate assembly to the front rigging support.
5. Adjust the footplate assembly height by aligning the desired adjustment holes in the upper front rigging support and lower footplate assembly.
6. From the outside of the swingaway front rigging, insert the threaded rivet through both the front rigging support and the footplate assembly.
7. From the inside of the swingaway front rigging, insert the button head screw through the appropriate adjustment hole and thread into the threaded rivet.
8. Using a screwdriver to hold the threaded rivet in position, securely tighten the button head screw. Torque to 32 in-lbs.
9. Rotate cam lock lever down to locked position.
10. Repeat STEPS 1-9 to adjust the remaining footrest.

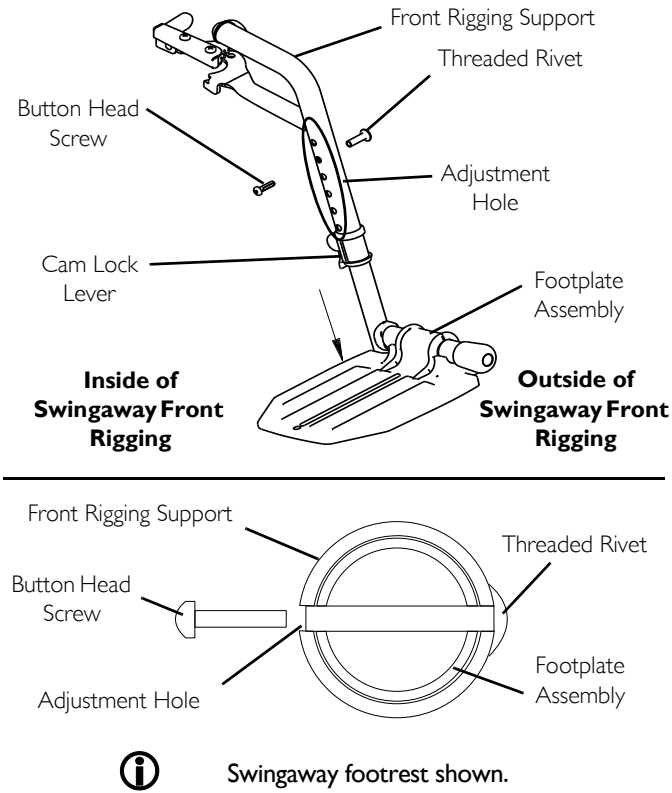

Swingaway footrest shown.

FIGURE 3 Bolt-In-Place Height

6.3 Adjusting Armrest Height

WARNING

Make sure the height adjustment lever is in the locked position before using the wheelchair.

1. Unlock the armrest by flipping the height adjustment lever on the top front of the armrest to the up (horizontal) position.
2. Adjust armrest to one of five positions.

   Height adjustment lever MUST be in the unlocked position when placing armrest into the arm assembly.

3. Lock the armrest by pressing the height adjustment lever into the down (vertical) position when the desired armrest height is achieved.
4. Repeat STEPS 1-3 for other armrest.

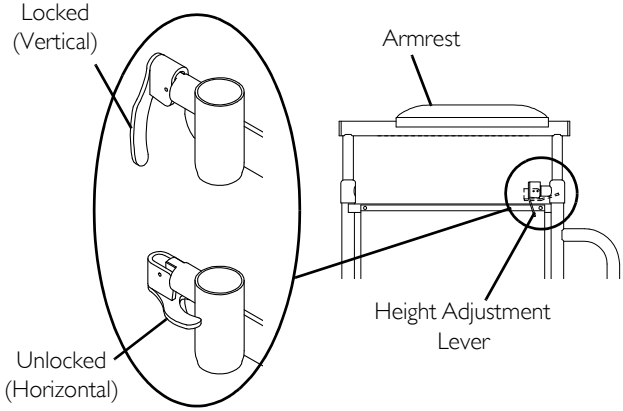

FIGURE 4 Adjusting Armrest Height

6.4 Adjusting Anti-tippers

WARNING

Anti-tippers are specific to the different seat-to-floor angles and/or seat-to-floor heights. Refer to tthis procedure of the manual for correct usage and adjustment. If these requirements cannot be achieved, DO NOT use the wheelchair. Contact a qualified technician. If changing the seat-to-floor height with or without a change to seat-to-floor angle, the correct anti-tippers must be used to maintain a $1\,^1/_2$ to 2 inch ground clearance.

Anti-tippers MUST be fully engaged and release buttons fully protruding out of the adjustment holes.

Ensure both anti-tippers are adjusted to the same mounting hole.

Adjusting the Anti-Tippers

A $1\,^1/_2$ to 2 inch clearance between the bottom of the anti-tipper wheels and the ground/floor MUST be maintained at all times.

1. Place the wheelchair on a flat surface.
2. Press the release buttons on the wheeled portion of the anti-tipper and slide it up or down to the desired adjustment hole.
3. Check to make sure that the release buttons are fully engaged in adjustment holes.
4. Ensure both anti-tippers are adjusted to the same height.
5. Measure the distance between the bottom of the anti-tipper wheels and the ground/floor.
6. If the distance between the bottom of anti-tipper wheels and the ground/floor is not $1\,^1/_2$ to 2-inches, repeat STEPS 2-5 until the distance is $1\,^1/_2$ to 2 inches.
7. If the $1\,^1/_2$ to 2 inch distance cannot be achieved with the anti-tippers, a different model may be required. Contact an Invacare dealer or qualified technician.

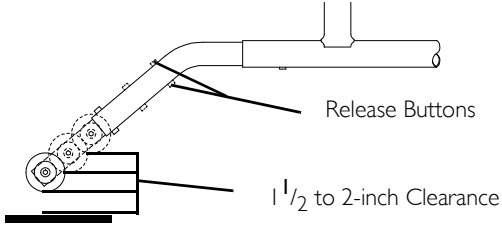

FIGURE 5 Adjusting the Anti-Tippers

7 Troubleshooting/Maintenance

7.1 Troubleshooting

Chair Veers Right/Left	Chair 3 Wheels	Sluggish Turn or Performance	Casters Flutter	Squeaks and Rattles	Looseness in Chair	Solutions
X	X	X	X			Check tires for correct and equal pressure
		X	X	X	X	Check for loose nuts and bolts.
X	X		X			Check caster headtube angle.
X	X					Check that rear wheels are equally spaced away from seat frame.

7.2 Maintenance

Maintenance Safety Precautions

WARNING

After any adjustments, repair or service and before use, make sure all attaching hardware is tightened securely. Otherwise injury or damage may result.

Check that all labels are missing, worn, or torn. Refer to Label Locations on page 9 for a listing of the labels and their locations.

CAUTION

DO NOT overtighten hardware attaching to the frame. This could cause damage to the frame tubing.

Suggested Maintenance Procedures

1. Before using your wheelchair:
   - Make sure all nuts and bolts are tight.
   - Check all parts for damage or wear and replace.
   - Check all parts for proper adjustment.

CAUTION

As with any vehicle, check the wheels and tires periodically for cracks and wear. Replace as recommended. Refer to Replacing/Repairing Rear Wheel Tire/Tube on page 50 or Replacing/Repairing Caster Tire/Tube on page 50.

2. The rear wheels, casters and tires should be checked periodically for cracks and wear, and should be replaced by a qualified technician if damaged.
3. Periodically adjust wheel locks in correlation to tire wear. Refer to Adjusting Patient Operated Wheel Locks on page 56.

Tire wear is excessive if:

- Pneumatic Tires - there is missing tread or the tires are bald.
- Urethane Tires - there are cuts, surface defects or the tires are loose on the rims.
- Rubber Tires - 30% or more of the tire has worn away.

Invacare recommends that rear wheel tire/tube and caster tire/tube be replaced every five years.

4. Periodically check handrims to ensure they are secured to the rear wheels. If loose, have them tightened by a qualified technician.
5. Periodically check caster and rear wheel bearings to make sure they are clean and free from moisture. Use a Teflon® lubricant if necessary.
6. Hand grips should be checked monthly for wear/looseness/deterioration. Clean if desired. Replace if looseness or deterioration is found.
7. Check upholstery for sagging, rips or tears.

7.3 Replacing/Repairing Rear Wheel Tire/Tube

WARNING

Replacement of solid urethane tires is not recommended. If the solid urethane tire needs repaired, Invacare recommends replacing the complete wheel assembly.

Replacement of rear wheel tube must be performed by a qualified technician.

7.4 Replacing/Repairing Caster Tire/Tube

WARNING

Replacement of solid urethane or semi-pneumatic tires is not recommended. If the solid urethane or semi-pneumatic tires need replaced, Invacare recommends replacing complete caster assembly.

For pneumatic tires, replacement of the tube must be performed by a qualified technician.

8 Service

! **IMPORTANT**

This section of the user manual provides service instructions for this product. All procedures in this section MUST be performed by a qualified technician/dealer.

For any service requirements beyond these procedures contact Invacare.

For a list of parts or part numbers contact your dealer/Invacare.

DO NOT return product without first contacting your dealer/Invacare for shipping and packing instructions.

If necessary, contact Invacare for a list of dealers.

⚠ **DANGER**

Risk of Death, Serious Injury or Damage

Use of incorrect or improper replacement (service) parts may cause death, serious injury, or damage.

Replacement parts MUST match original Invacare parts.

ALWAYS provide the wheelchair serial number to assist in ordering the correct replacement parts.

⚠ **WARNING**

Risk of Serious Injury

A non-qualified technician performing service procedures on this wheelchair can result in serious injury.

A qualified technician MUST perform all procedures in this section of the manual.

⚠ **WARNING**

Unless otherwise noted, all service and adjustment should be performed while the wheelchair is unoccupied.

After ANY adjustments, repair or service and BEFORE use, make sure all attaching hardware is tightened securely - otherwise injury or damage may result.

8 SERVICE

TOOLS: Performing procedures in this section may require the use of tools including:

Flat blade and philips head screwdrivers, standard and or metric socket set/wrenches, torque wrench, hex (Allen) keys and side cutters.

8.1 Replacing Heel Loop

For this procedure, refer to FIGURE 1 on page 53.

1. Pull the cam lock lever up to unlocked position.
2. Perform one of the following as shown in Detail "A".
   - Footplates with Spring Buttons: Push in the release buttons and remove the footplate assembly from the front rigging support.
   - Bolt-In-Place Footplates:
     i. Using a screw driver to hold the threaded rivet in position, remove the button head screw from the threaded rivet.
     ii. Remove the threaded rivet and button head screw securing the footplate assembly to the front rigging support.
3. Remove the mounting screw, spacer and locknut that secure the heel loop to the footplate.
4. Remove existing heel loop from slide tube.
5. Install new heel loop onto slide tube.
6. Install the mounting screw, spacer and locknut to secure the heel loop to the footplate. Tighten until the spacer is secure.
7. Insert the lower footrest assembly into the upper footrest assembly to desired height.

8. Perform one of the following as shown in Detail "A":
   - Footplates With Spring Buttons: Ensure that the release buttons fully protrude from holes on both sides of the upper footrest support.
   - Bolt-In-Place Footplates:
     i. From the outside of the swingaway front rigging, insert the threaded rivet through both the front rigging support and the footplate assembly.
     ii. From the inside of the swingaway front rigging, insert the button head screw through the appropriate adjustment hole and thread into the threaded rivet.
     iii. Using a screwdriver to hold the threaded rivet in position, securely tighten the button head screw. Torque to 32 in-lbs.
9. Rotate cam lock lever down to locked position.

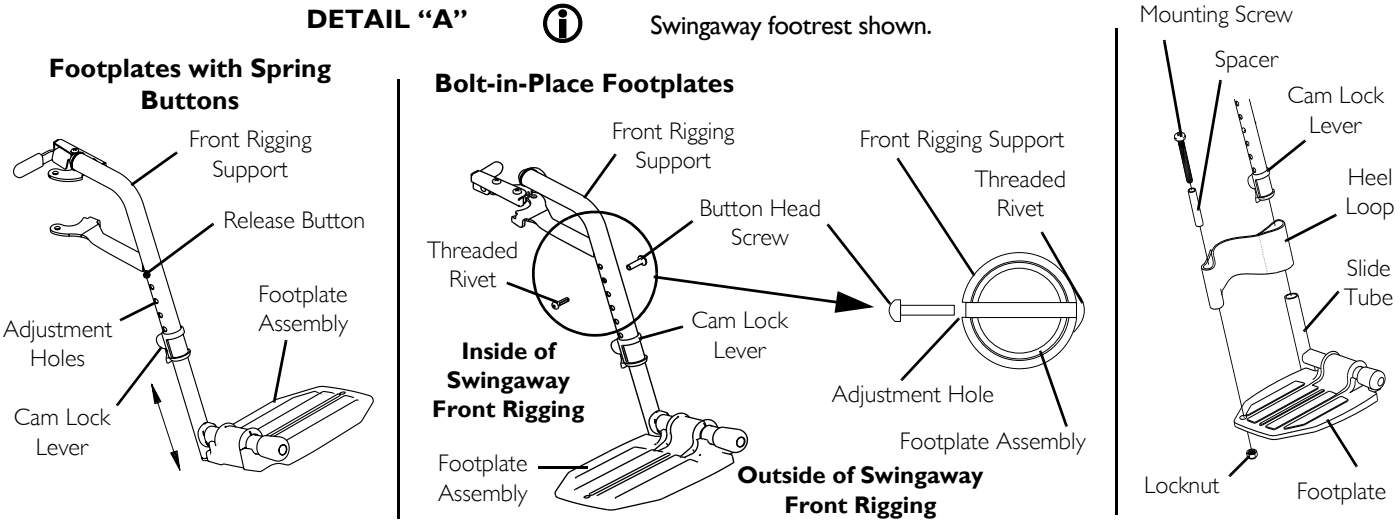

FIGURE 1 Replacing Heel Loop

8.2 Replacing Back Upholstery

1. Remove the eight mounting screws and washers that secure the existing back upholstery to the back canes.
2. Remove existing back upholstery from the back canes.
3. Ensure positioning of seat positioning strap (if used). Refer to Installing the Seat Positioning Strap on page 67.
4. Securely tighten the new back upholstery to the back canes with the mounting screws and washers.

8.3 Replacing Seat Upholstery

1. Remove the mounting screws and washers that secure the existing seat upholstery to the crossbraces.
2. Remove the existing seat upholstery from the crossbraces.
3. Install new seat upholstery by reversing STEPS 1-2.

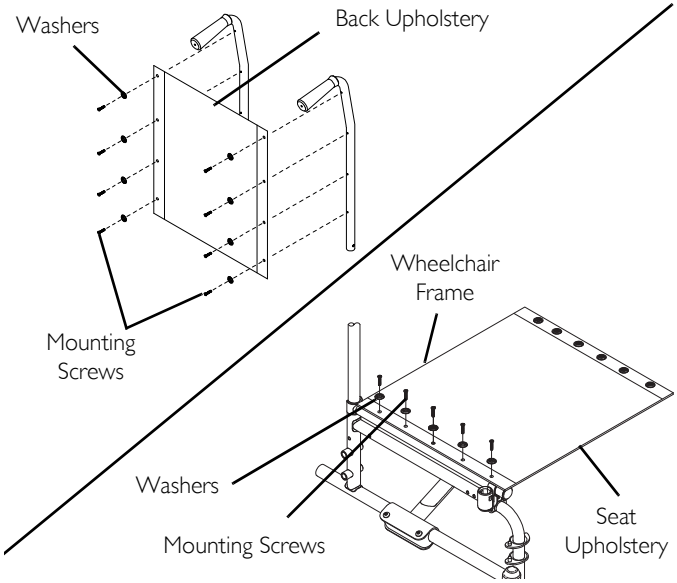

FIGURE 2 Replacing Back Upholstery/Replacing Seat Upholstery

8.4 Adjusting the Seat Width

For this procedure, refer to FIGURE 3 on page 56.

When adjusting the seat width of the wheelchair, the back and seat upholstery MUST be changed. If applicable, the headrest pillow and headrest upholstery MUST be changed as well.

1. Remove the existing back and seat upholstery from the wheelchair. Refer to Replacing Back Upholstery and Replacing Seat Upholstery on page 54.
2. Remove the two button screws and locknuts that secure the two pivot links to the crossbraces.
3. Remove the four button screws, locknuts and two crossbrace saddles that secure the bottom of the crossbrace to the wheelchair frame. Repeat for other crossbrace.
4. Remove the two hex screws and locknuts that secure the two crossbraces together.

Note the orientation of the two hex screws and locknuts for assembling the new crossbraces.

5. Assemble the two new crossbraces together with the existing two hex screws and locknuts. Securely tighten. Refer to FIGURE 3 for hardware orientation.
6. Determine the correct pivot link mounting hole to use with the desired seat width. Refer to following chart.

SEAT WIDTH	PIVOT LINK
18 INCH **20 INCH** **22 INCH** **24 INCH**	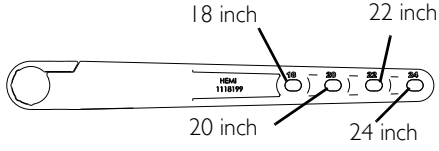

7. Secure the pivot links to the crossbraces with the two button screws and locknuts. Securely tighten.

Position the rear crossbrace saddles on wheelchair frame using the washer on the underside of the wheelchair frame as a reference. Refer to FIGURE 3 on page 56 for proper positioning of the crossbrace saddle.

8. Reinstall the four button screws, locknuts and two crossbrace saddles that secure the bottom of the new crossbrace to the wheelchair frame. Repeat for opposite crossbrace. Securely tighten.
9. Install the new back and seat upholstery onto the wheelchair. Refer to Replacing Back Upholstery and Replacing Seat Upholstery on page 54.

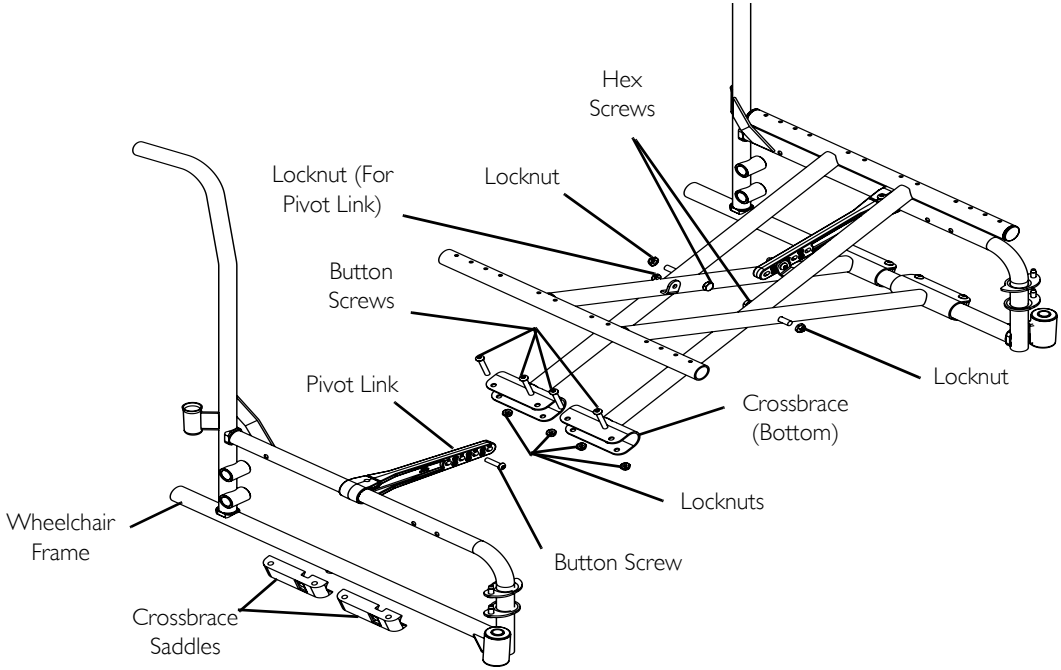

FIGURE 3 Adjusting the Seat Width

8.5 Removing/Installing Rear Wheels

WARNING

Only a qualified technician may change the seat-to-floor height.

Install only 24 inch rear wheels on the Tracer IV wheelchair. Otherwise, the wheelchair will become unstable and injury or damage may occur.

Make sure both rear wheels are installed into the same respective mounting hole before using the wheelchair. Otherwise, injury may occur.

For heavy duty wheel option (450 lb weight limit): 24 inch pneumatic flat-free insert rear wheels MUST be used.

1. Remove the hex screw, spacer, and locknut that secure the rear wheel to the wheelchair frame.
2. Repeat STEP 1 for the opposite rear wheel if desired.
3. To reinstall the rear wheel(s) onto the wheelchair, reverse STEPS 1-2 and torque locknut to 40 ft.-lbs.

   Ensure the axle spacer is installed between the rear wheel and the wheelchair frame.

4. Adjust wheel locks. Refer to Using/Adjusting Patient Operated Wheel Locks on page 54.

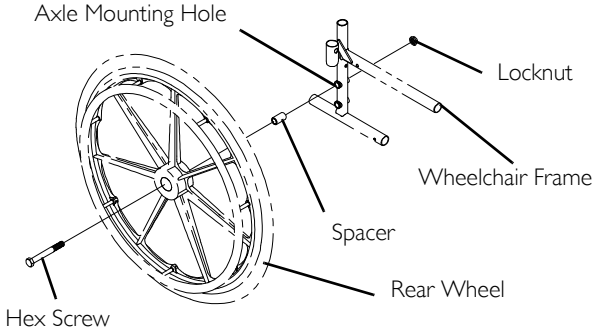

FIGURE 4 Removing/Installing Rear Wheels

8.6 Replacing Rear Wheel Handrim

1. Remove the rear wheel from the wheelchair. Refer to Removing/Installing Rear Wheels on page 57.
2. Remove the mounting screws and washers (not shown) that secure the handrim to the rear wheel.
3. Remove the existing handrim.
4. Install the new handrim by reversing STEPS 1-3.
5. Reinstall rear wheel to the wheelchair. Refer to Removing/Installing Rear Wheels on page 57.
6. Repeat STEPS 1-5 for the opposite rear wheel if necessary.

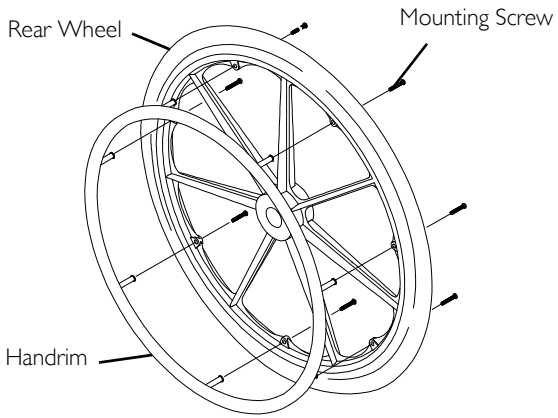

FIGURE 5 Replacing Rear Wheel Handrim

8.7 Installing/Replacing Front Casters and Forks

WARNING

Make sure both fork/caster assemblies are the same size before using the wheelchair. Otherwise injury may occur.

For this procedure, refer to FIGURE 6 on page 59.

This procedure can be performed if replacing the exact same size front caster.

1. Remove the dust cover.
2. Remove the locknut and nylon washer (if present) that secure the fork to the caster headtube.
3. Drop the fork assembly out of the caster headtube.

4. Remove the existing fork stem washer from the existing fork assembly.

   If caster replacement is desired, refer to Replacing Front Casters on page 60.

5. Install existing fork stem washer onto new fork assembly.
6. Slide the new fork assembly into the caster headtube.

   Ensure caster is mounted in the same height position as the existing fork/caster assembly before installing.

7. Reassemble by reversing STEPS 1-2.
8. Repeat STEPS 1-7 for the opposite fork assembly.
9. Adjust the forks. Refer to Adjusting Forks on page 59.

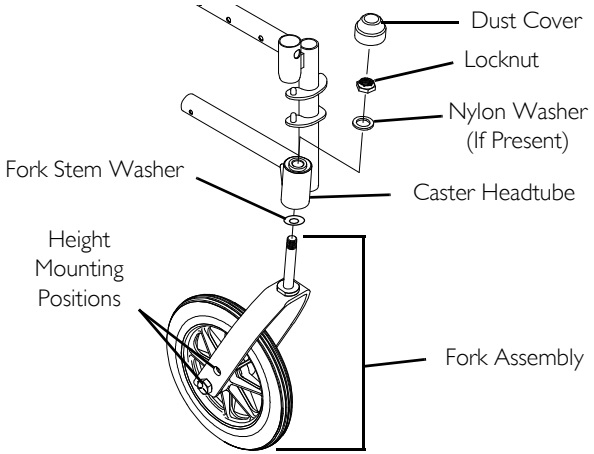

FIGURE 6 Installing/Replacing Front Casters and Forks

8.8 Adjusting Forks

1. To properly tighten caster journal system and guard against flutter, perform the following check:
   A. Tip back of wheelchair to floor.
   B. Pivot both forks and casters to top of their arc simultaneously.
   C. Let casters drop to bottom of arc (wheels should swing once to one-side, then IMMEDIATELY rest in a straight downward position).
   D. Adjust locknuts according to freedom of caster swing.
   E. Repeat STEPS C-D until wheels swing once to one-side, then IMMEDIATELY rest in a downward position.
2. Test wheelchair for maneuverability.
3. Readjust locknuts if necessary, and repeat STEPS 1-2 until correct.
4. Snap dust cover over the locknut and stem.

8.9 Replacing Front Casters

WARNING

Only 8 -inch casters should be installed on the Tracer IV wheelchair. Otherwise, the wheelchair may become unstable and injury or damage may occur.

For Heavy Duty Wheel Option (450 lb weight limit): 8 x $1^3/_4$ inch semi-pneumatic front caster MUST be used.

Only a qualified technician may change the front caster mounting position or the seat-to-floor height.

Note the caster mounting position on the fork assembly for proper installation of the new front caster.

5. Remove the hex screw, washers and locknut that secure the front caster to the fork.

   Washers are only used with 8 inch casters with precision bearings.

6. To reinstall the new front caster onto the fork, reverse STEP 1.

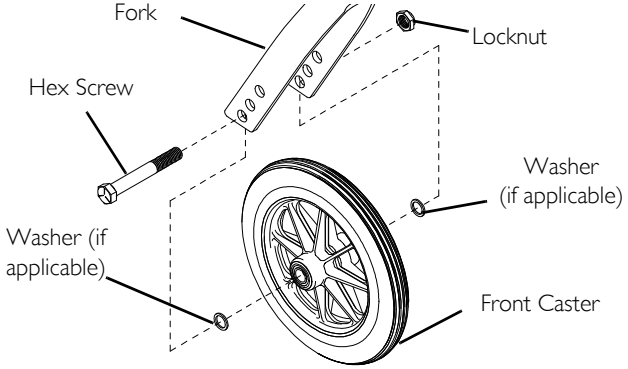

FIGURE 7 Replacing Front Casters

8.10 Changing Seat-to-Floor Height

WARNING

The size/position of the front casters, position of the rear wheels, use of anti-tipper model, as well as the user condition directly relate to the stability of the wheelchair. Any change to one or any combination of the five may cause the wheelchair to decrease in stability. These adjustments must be performed by a qualified technician.

Seat-to-floor heights have specific positions depending on rear wheel position and front caster position. These adjustments must be performed by a qualified technician.

If changing the seat-to-floor height, the anti-tippers MUST be adjusted to maintain a $1^1/_2$ to 2-inch ground clearance.

For this procedure, refer to FIGURE 8 on page 62.

1. Refer to the chart in FIGURE 8 on page 62 to determine mounting positions for front casters/forks and rear wheels for the desired obtainable seat-to-floor height:
2. Remove the rear wheels from the wheelchair. Refer to Removing/Installing Rear Wheels on page 57.
3. Remove the front casters from the forks. Refer to Replacing Front Casters on page 51 and Installing/Replacing Front Casters and Forks on page 49.
4. Reinstall the casters in the mounting positions indicated in the chart.
5. Reinstall the rear wheels onto the wheelchair in the mounting position indicated in the chart. Refer to Removing/Installing Rear Wheels on page 57.
6. Adjust anti-tippers according to new seat-to-floor height. Refer to Adjusting the Anti-Tippers on page 54.

8-INCH FRONT CASTERS

SEAT-TO-FLOOR HEIGHT (IN INCHES)	FRONT CASTER MOUNTING POSITION	REAR WHEEL SIZE	REAR WHEEL MOUNTING POSITION
17 1/2	Top	24 inch	Top
19 1/2	Bottom	24 inch	Bottom

DETAIL "A" - REAR WHEEL MOUNTING POSITIONS-ADULT/HEMI FRAME STYLE

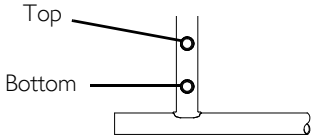

DETAIL "B" - 8-INCH FORK MOUNTING POSITIONS

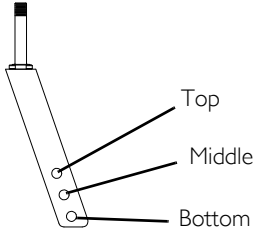

FIGURE 8 Changing Seat-to-Floor Height

8.11 Installing Wheel Lock Shoe Extensions

1. Loosen the two set screws on the wheel lock shoe extension until the set screws DO NOT protrude into the slot.
2. Insert the wheel lock shoe into the slot in the shoe extension.

   Ensure the pointed end of the wheel lock shoe extension is facing toward the rear wheel.

3. Position the wheel lock shoe extension so the outside edge is flush with the end of the wheel lock shoe.
4. Securely tighten the two set screws to secure the wheel lock shoe extension to the wheel lock shoes.

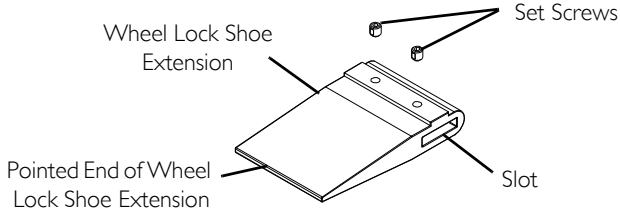

FIGURE 9 Installing Wheel Lock Shoe Extensions

9 Options

! **IMPORTANT**

This section of the user manual provides service instructions for this product. All procedures in this section MUST be performed by a qualified technician/dealer.

For any service requirements beyond these procedures contact Invacare.

For a list of parts or part numbers contact your dealer/Invacare.

DO NOT return product without first contacting your dealer/Invacare for shipping and packing instructions.

If necessary, contact Invacare for a list of dealers.

DANGER

Risk of Death, Serious Injury or Damage

Use of incorrect or improper replacement (service) parts may cause death, serious injury, or damage.

Replacement parts MUST match original Invacare parts.

ALWAYS provide the wheelchair serial number to assist in ordering the correct replacement parts.

WARNING

Risk of Serious Injury

A non-qualified technician performing service procedures on this wheelchair can result in serious injury.

A qualified technician MUST perform all procedures in this section of the manual.

WARNING

Unless otherwise noted, all service and adjustment should be performed while the wheelchair is unoccupied.

After ANY adjustments, repair or service and BEFORE use, make sure all attaching hardware is tightened securely - otherwise injury or damage may result.

TOOLS: Performing procedures in this section may require the use of tools including:

Flat blade and philips head screwdrivers, standard and or metric socket set/wrenches, torque wrench, hex (Allen) keys and side cutters.

9.1 Installing Carrying Pocket

1. Determine the height required for the carrying pocket.
2. Remove the two back upholstery screws and two washers that correspond to the desired height.
3. Center pouch against back canes, determine and mark location for mounting holes on carrying pouch straps.
4. Punch holes in straps.
5. Fold excess strap ends under, mark mounting holes in second thickness of strap and punch mounting holes.
6. Fold strap ends under so the upholstery screw can be inserted through two thicknesses of strap.
7. Position the carrying pocket on the wheelchair frame.
8. Secure the carrying pocket to the wheelchair frame with the two washers and two back upholstery screws.

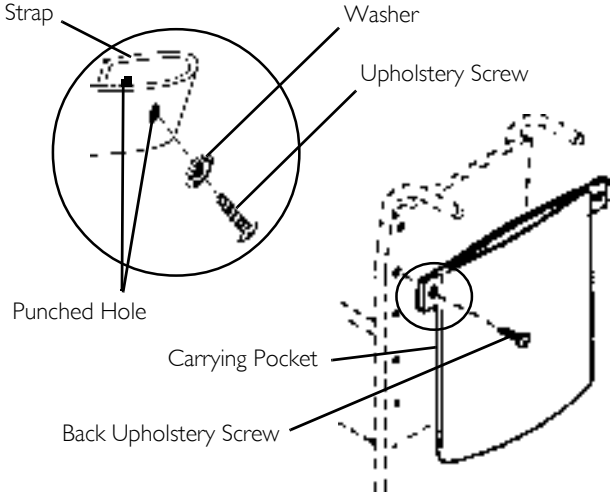

FIGURE 1 Installing Carrying Pocket

9.2 Installing Crutch and Cane Carrier

WARNING

Check base weekly to ensure proper placement.

When loading the crutch/cane carrier, ensure items are securely placed into the base. Also ensure that there is no interference with folding the wheelchair, the rear wheels, or the swing-back arms.

Strap MUST be securely fastened while carrying items.

NEVER insert or remove items while wheelchair is moving.

1. Slide the clamp with the base attached over the end of the step tube of the wheelchair. Ensure the base is towards the inside of the wheelchair.
2. Position the base parallel to the step tube.

CAUTION

Base should be parallel to step tube to avoid bending spokes when folding the wheelchair.

3. Securely tighten the locknut that secures the base to the step tube of the wheelchair.
4. Remove the upper back upholstery screw and washer.
5. Align the strap with the back upholstery screw mounting hole.
6. Reinstall the back upholstery screw and washer and secure the strap to the wheelchair.
7. The base cleans easily with any chrome or glass cleaner. The strap can be cleaned with mild soap and water.

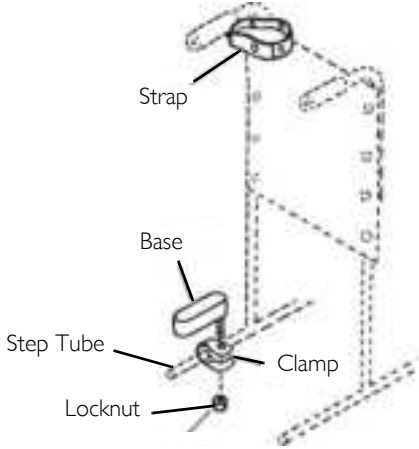

FIGURE 2 Installing Crutch and Cane Carrier

9.3 Installing the Seat Positioning Strap

WARNING

ALWAYS wear your seat positioning strap. Inasmuch as the seat positioning strap is an option on this wheelchair (you may order with or without the seat positioning strap), Invacare strongly recommends ordering the seat positioning strap as an additional safeguard for the wheelchair user. The seat positioning strap is a positioning strap only. It is not designed for use as a safety device withstanding high stress loads such as auto or aircraft safety belts. If signs of wear appear, strap MUST be replaced IMMEDIATELY.

1. Remove the bottom back upholstery screw from the wheelchair.
2. Position the seat positioning strap half between the back cane and back upholstery.
3. Secure the back upholstery and seat positioning strap to the wheelchair with the existing back upholstery screw.

   The screw MUST go through the grommet in the seat positioning strap.

4. Repeat STEPS 1-3 for the opposite side of the wheelchair.

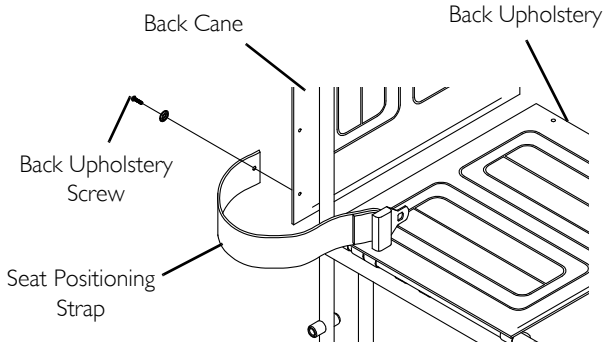

FIGURE 3 Installing the Seat Positioning Strap

Aracent Healthcare

USA
E: sales@aracent.com
P: 888-550-7750
F: 888-550-7752

www.aracent.com

Invacare Corporation

USA
One Invacare Way
Elyria, Ohio USA
44036-2125
800-333-6900

www.invacare.com

Canada
570 Matheson Blvd E
Unit 8
Mississauga Ontario
L4Z 4G4 Canada
800-668-5324

Part No. 1110558

Rev 1~00 - 1/19/16

Making Life's Experiences Possible™

Yes, you can.®