TROFAST

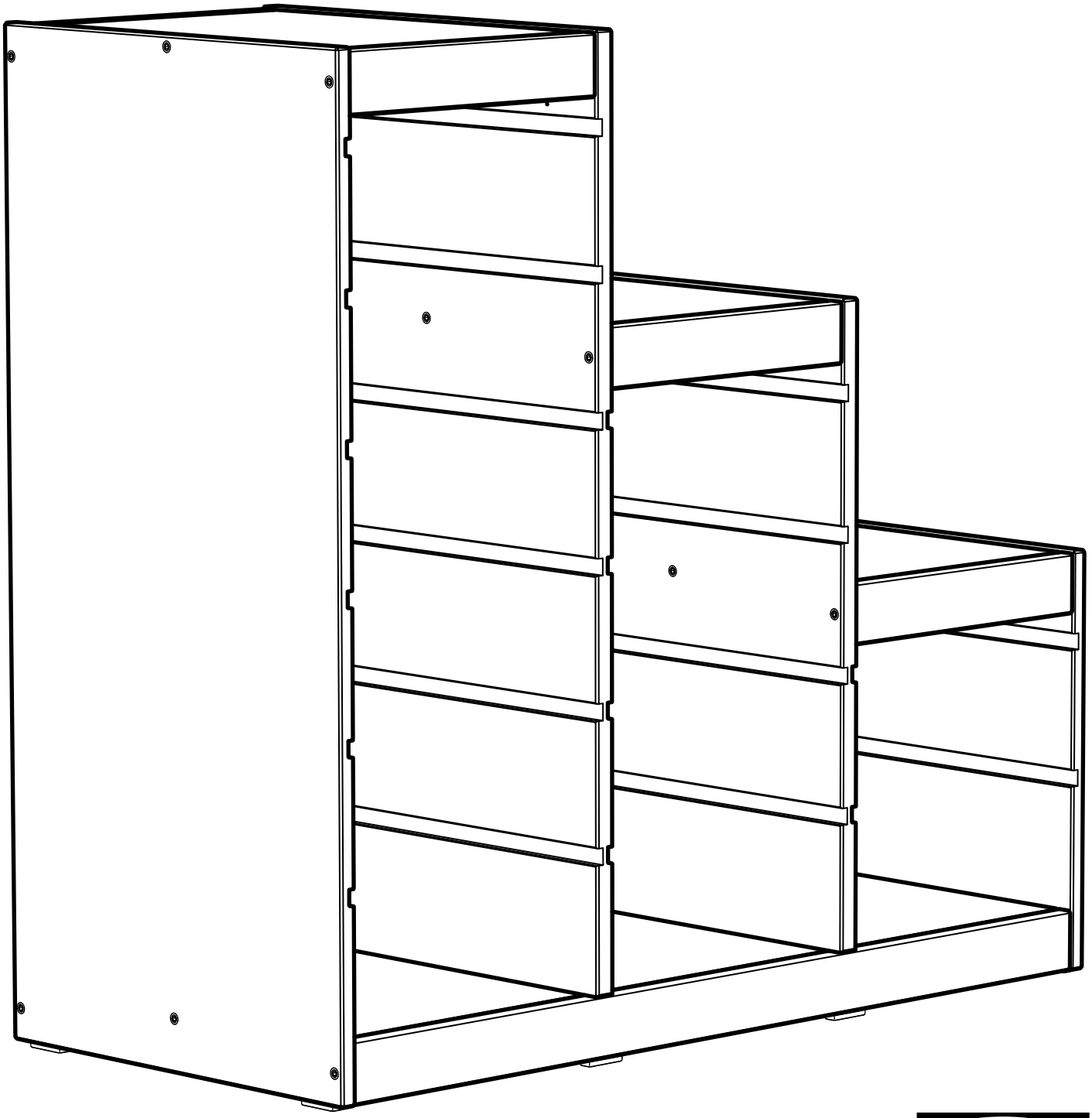

Design and Quality
IKEA of Sweden

English

WARNING

Children have died from furniture tipover.To reduce the risk of furniture tipover:

ALWAYS install anti-tip device provided.

NEVER put a TV on this product.

NEVER allow children to stand, climb, or hang on any drawers, doors, or shelves.

NEVER open more than one drawer at a time.

Place heaviest items in the lowest drawers.

English

Read and follow each step of the instruction carefully.

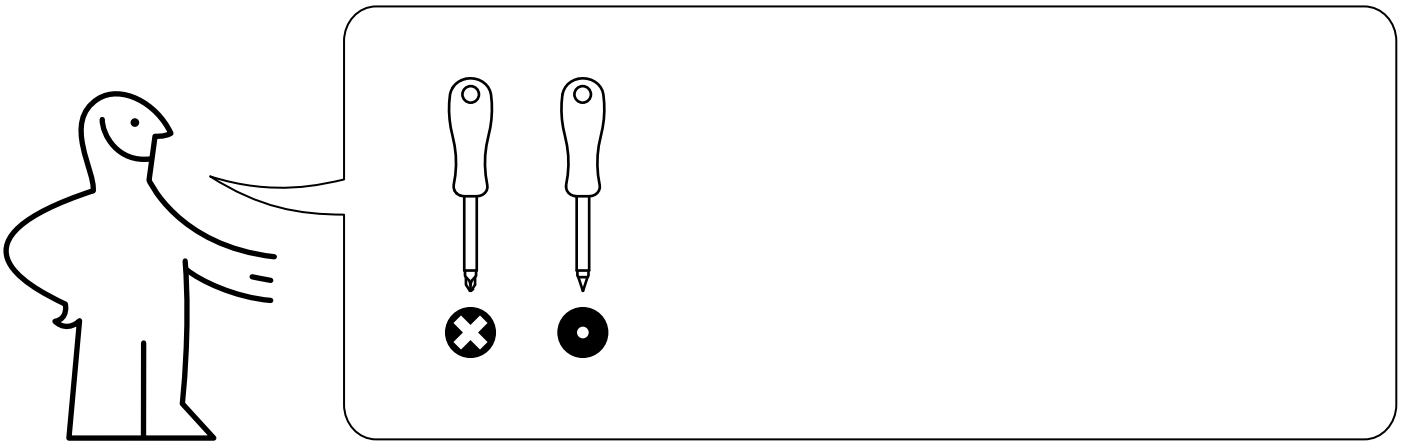

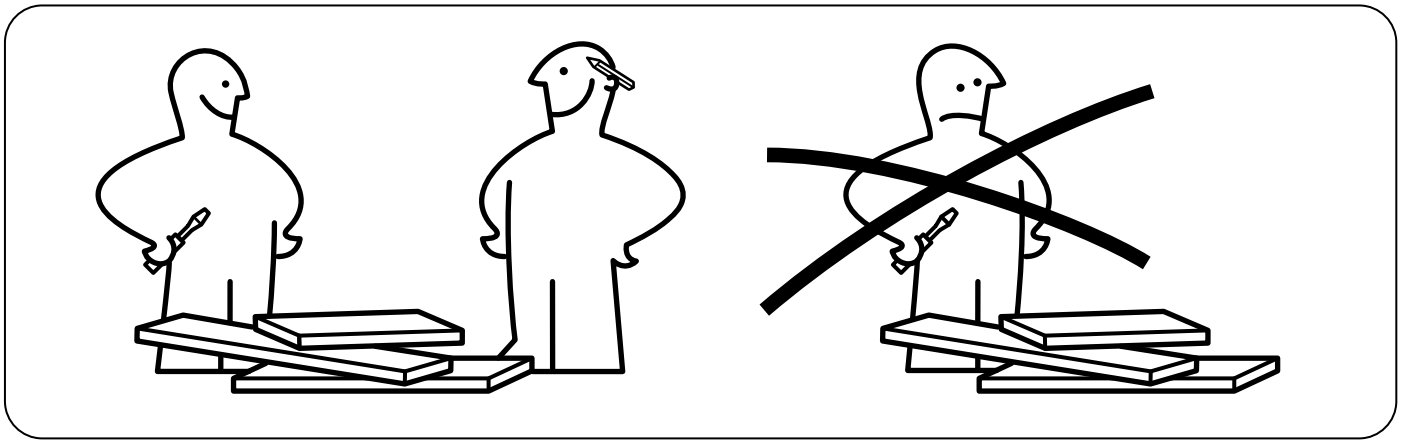

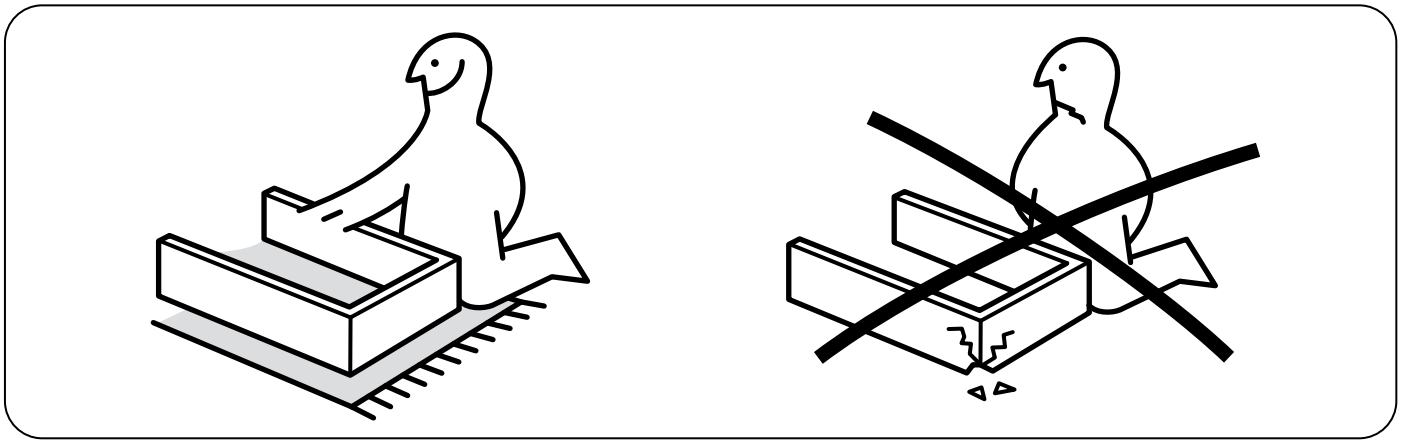

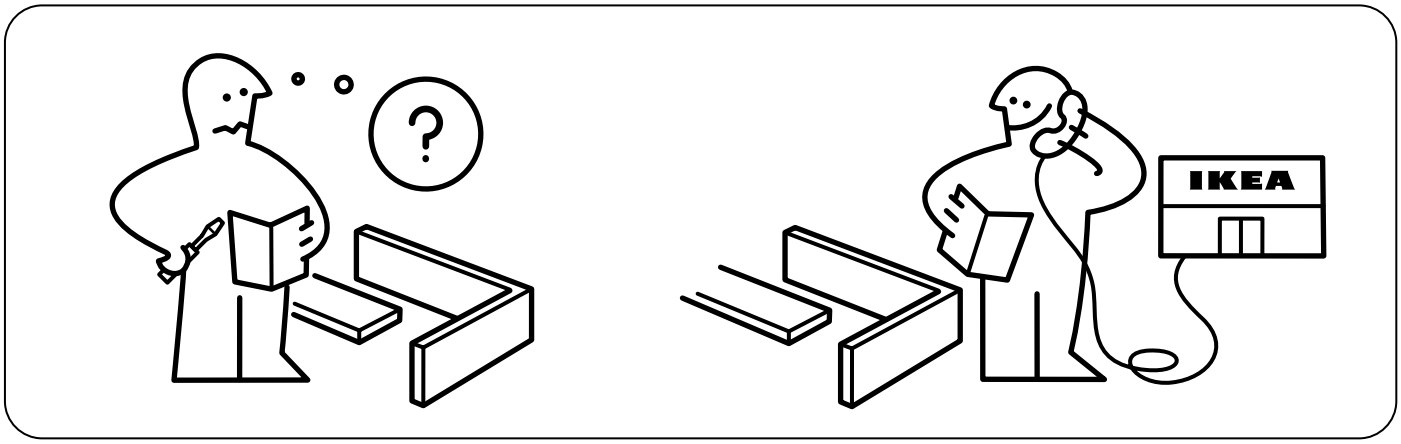
?
IKEA

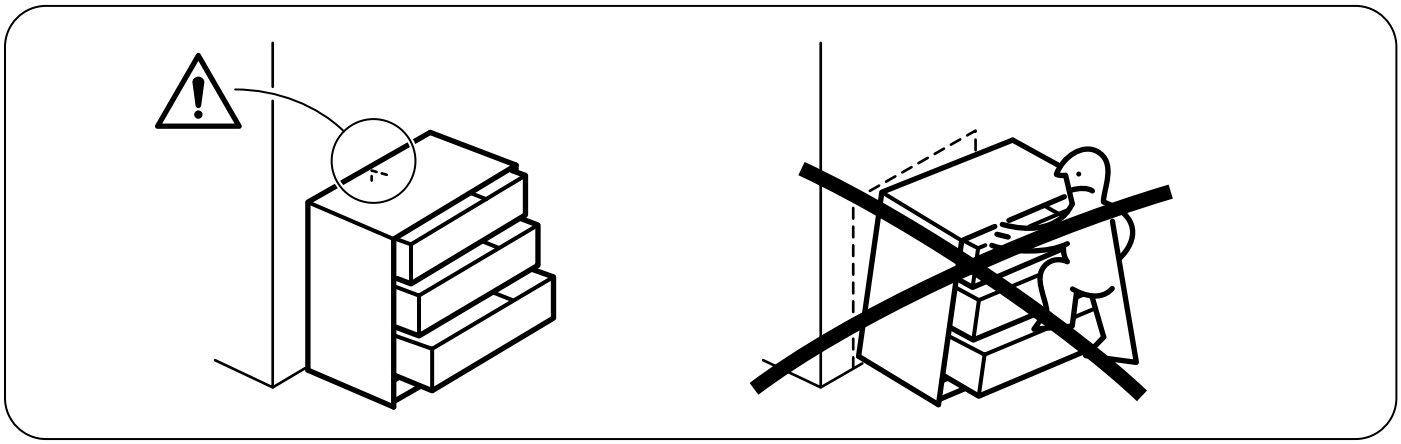

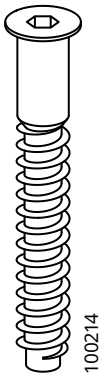

28x

52x

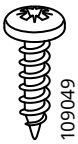

1x

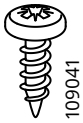

4x

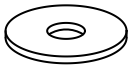

2x

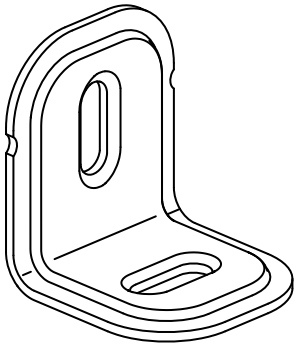

2x

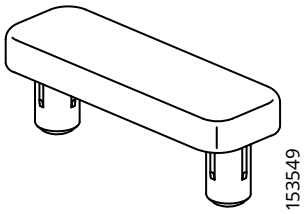

8x

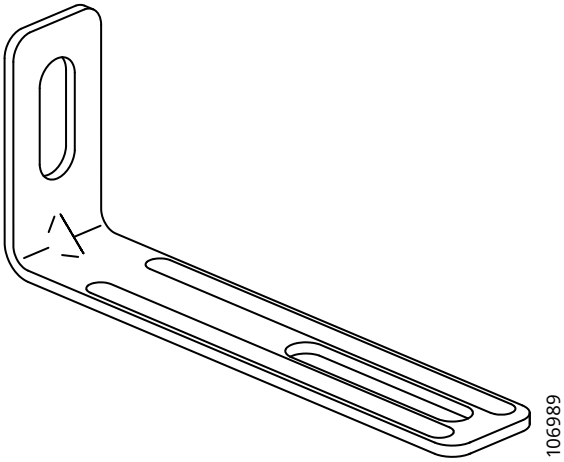

1x

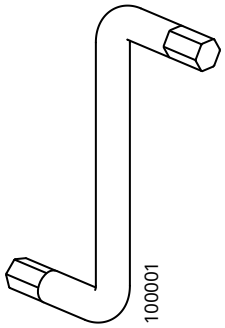

1x

1

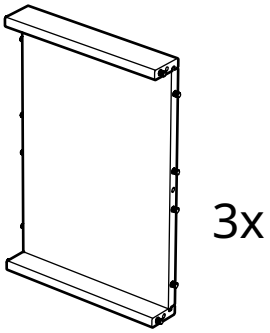

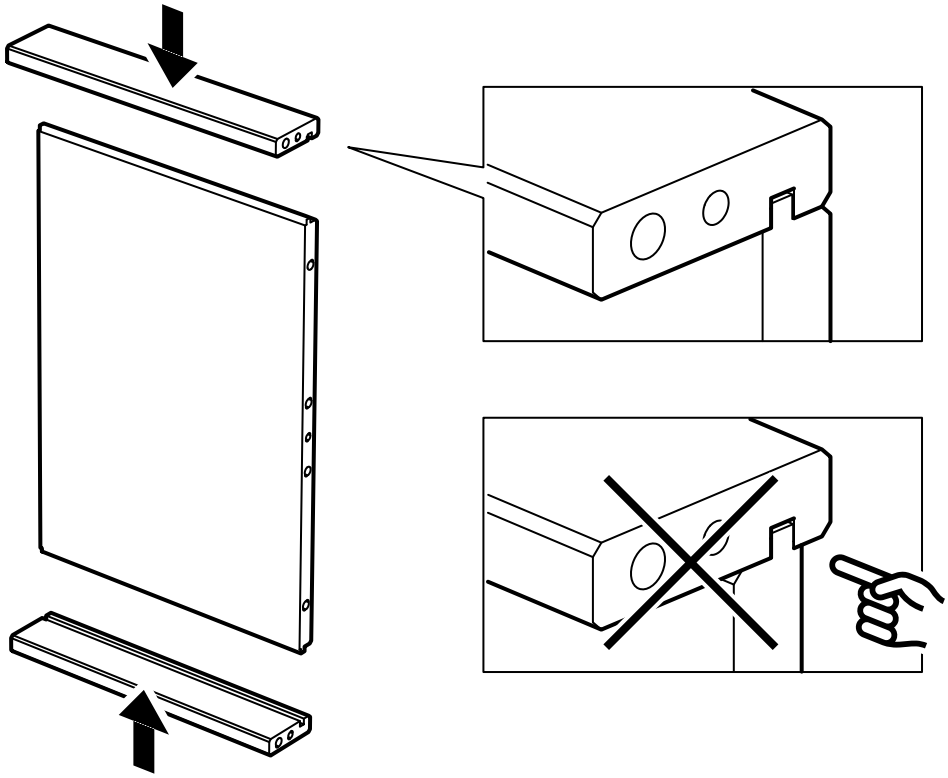

2

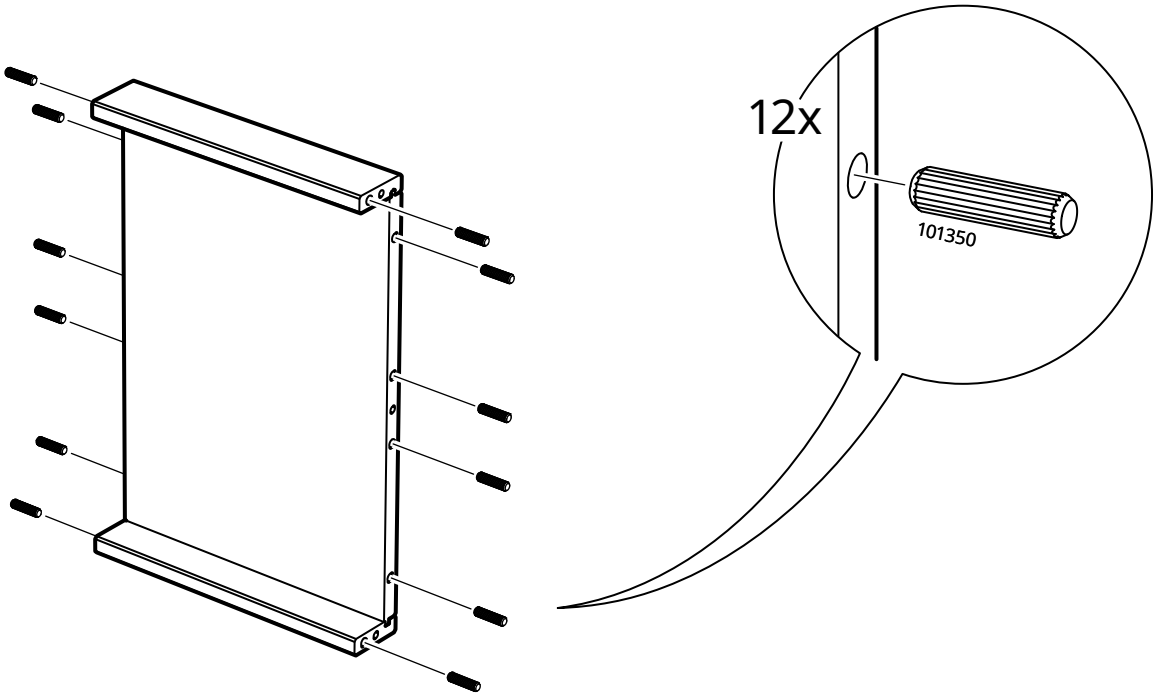

3

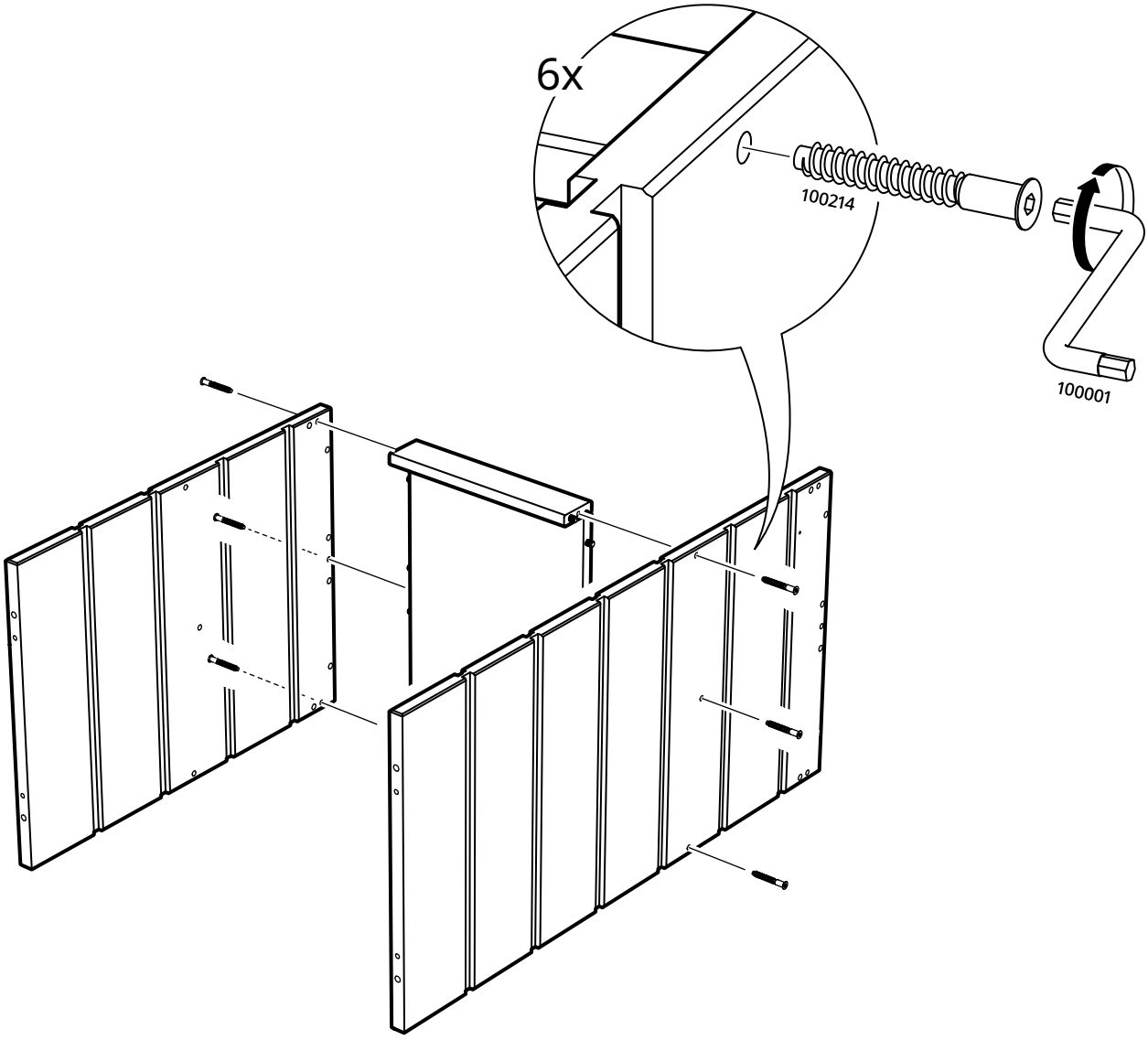

4

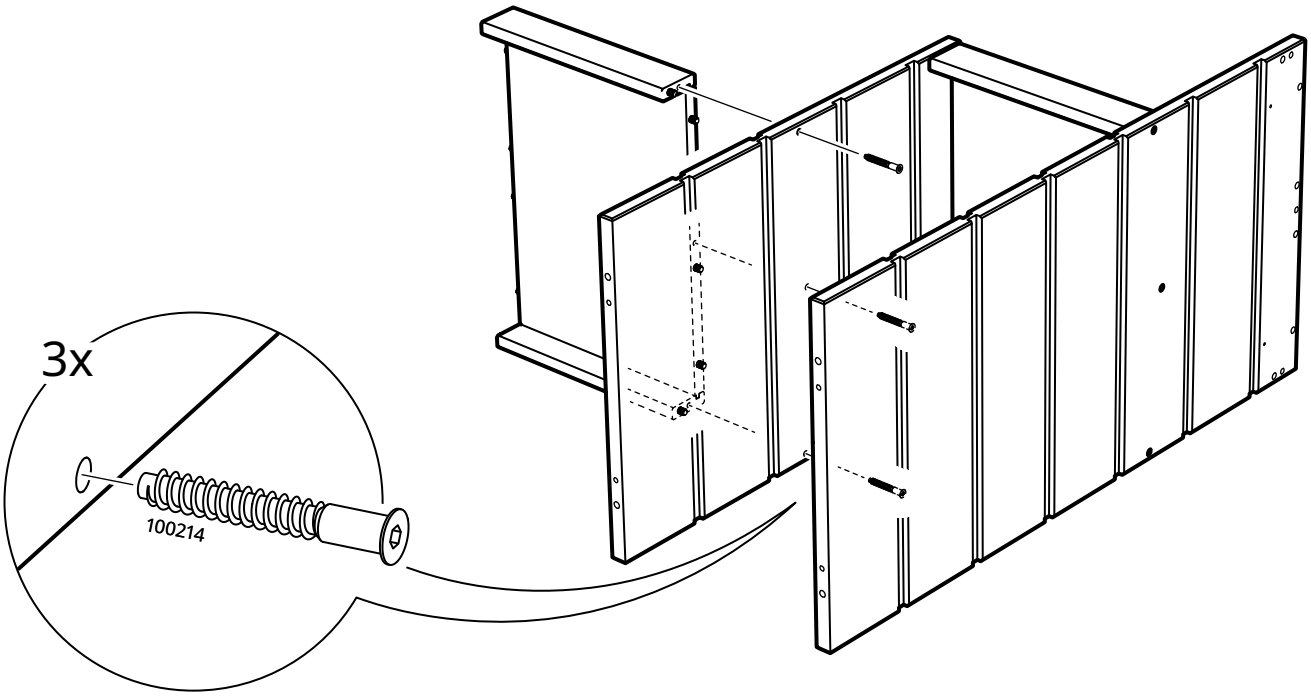

5

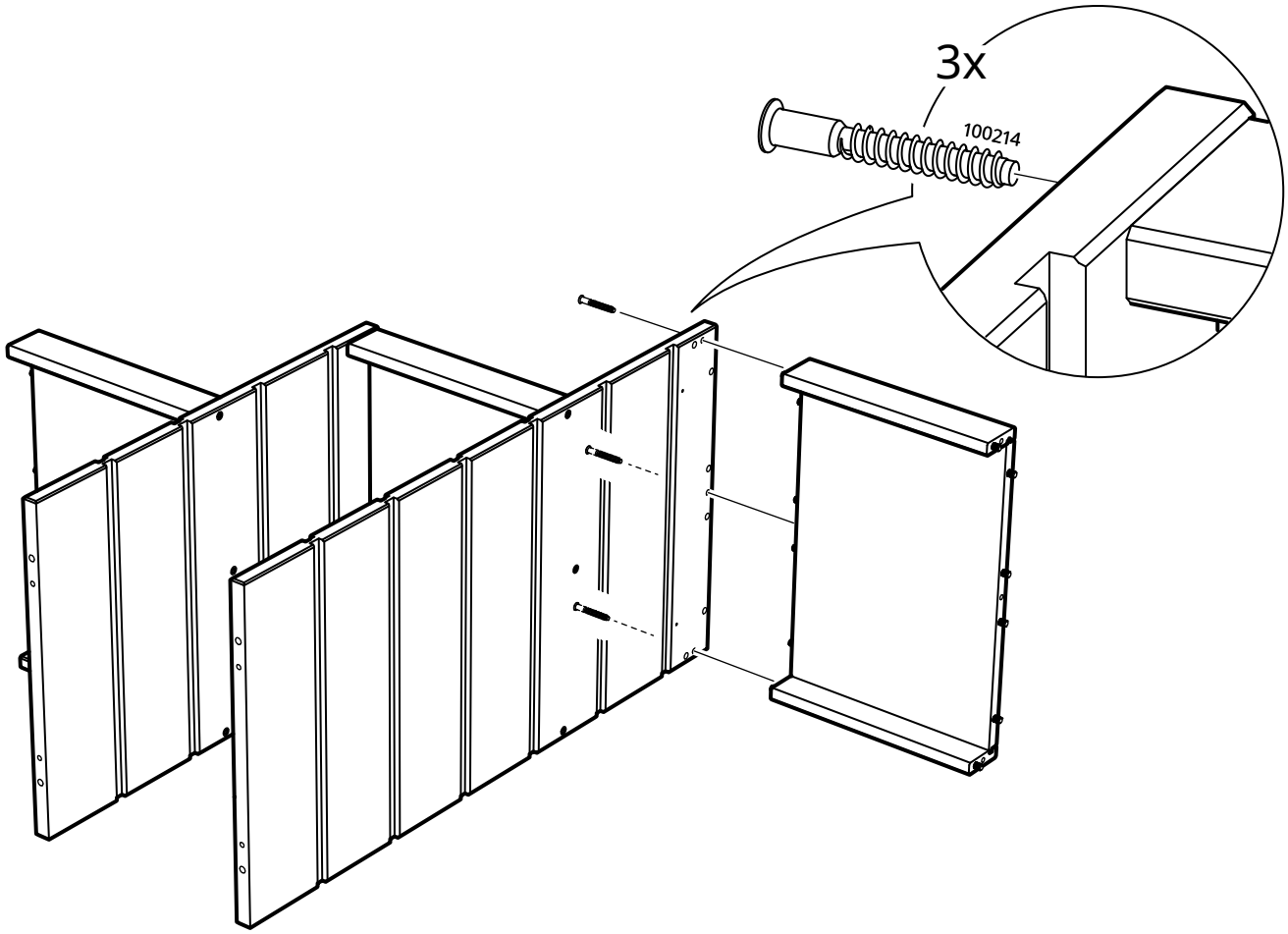

6

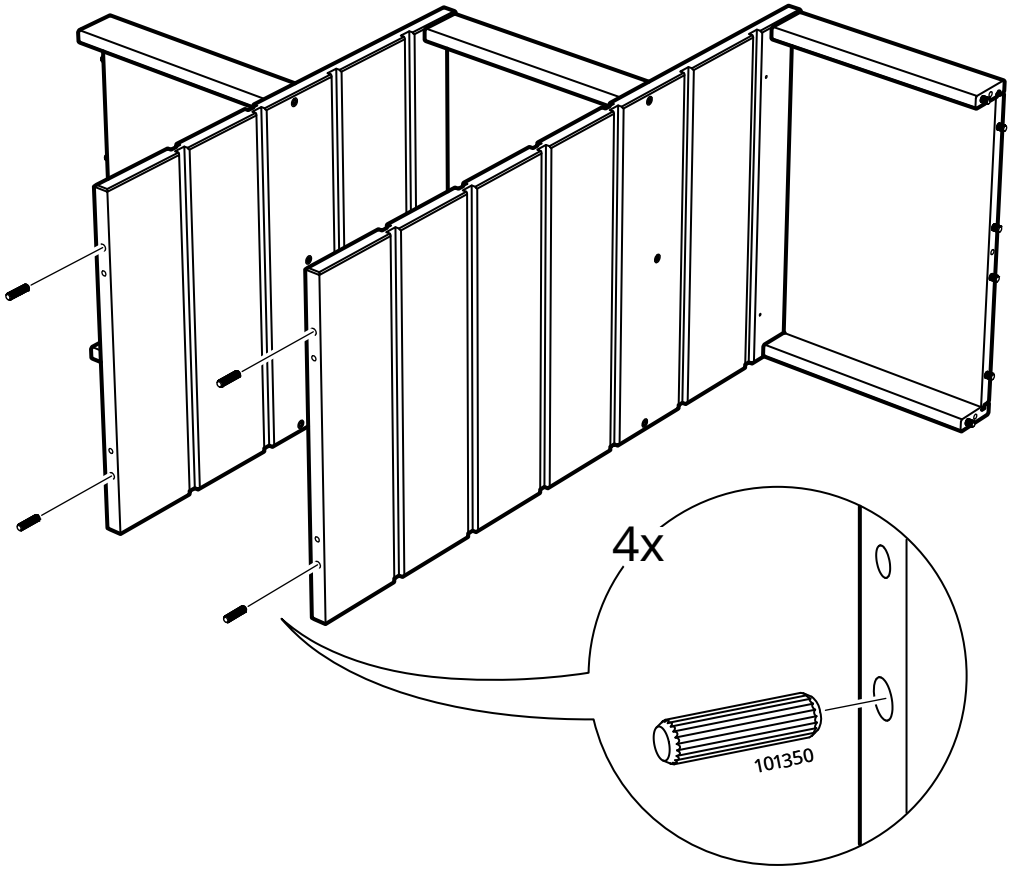

7

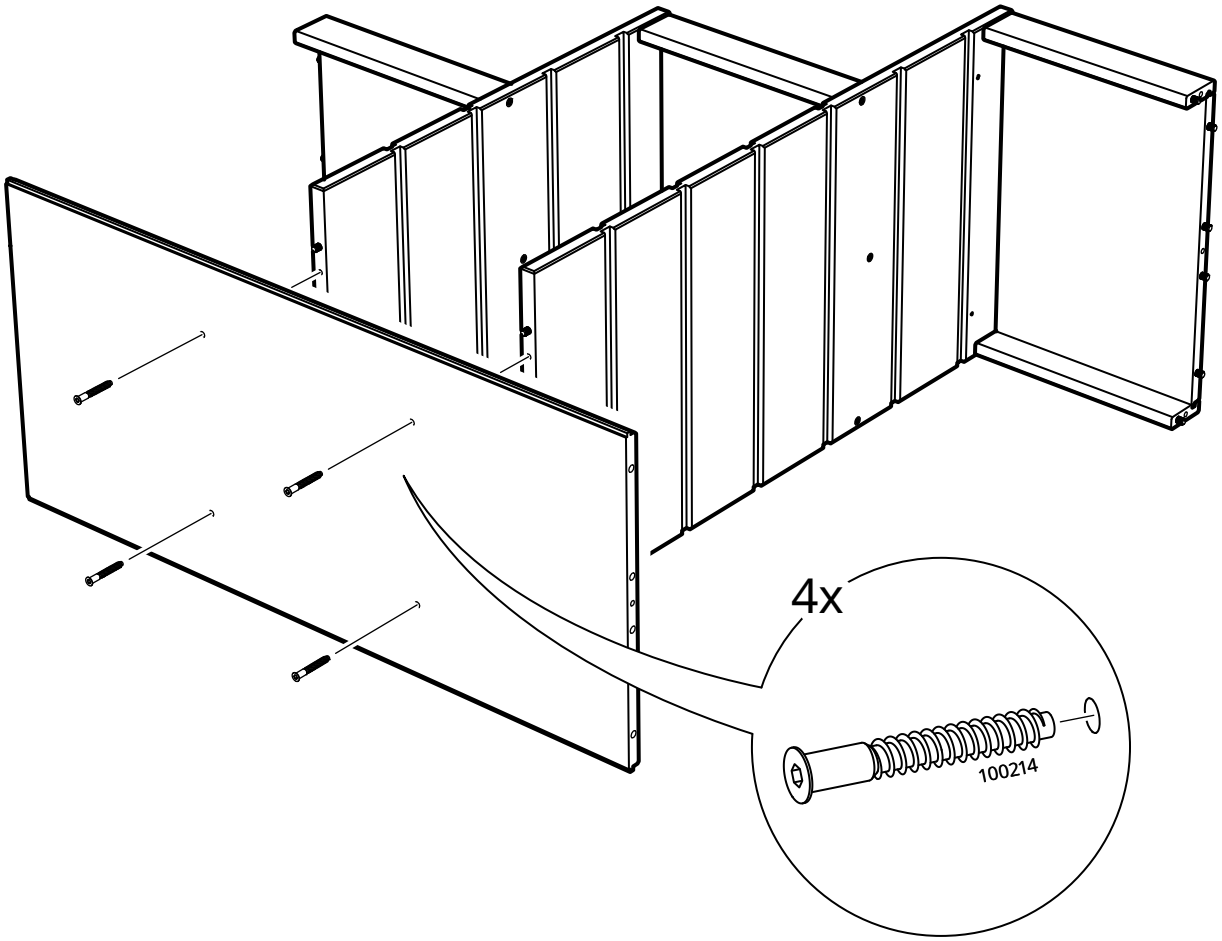

8

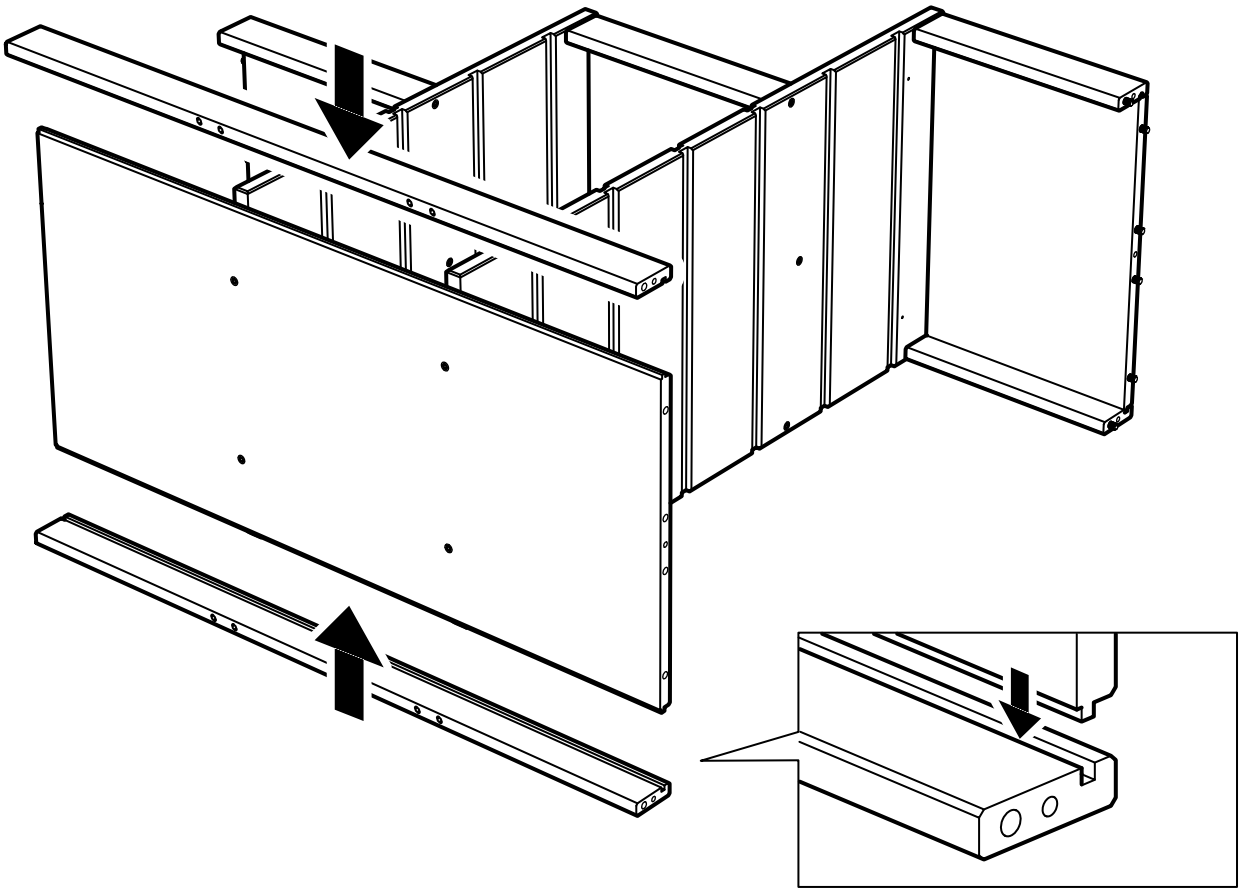

9

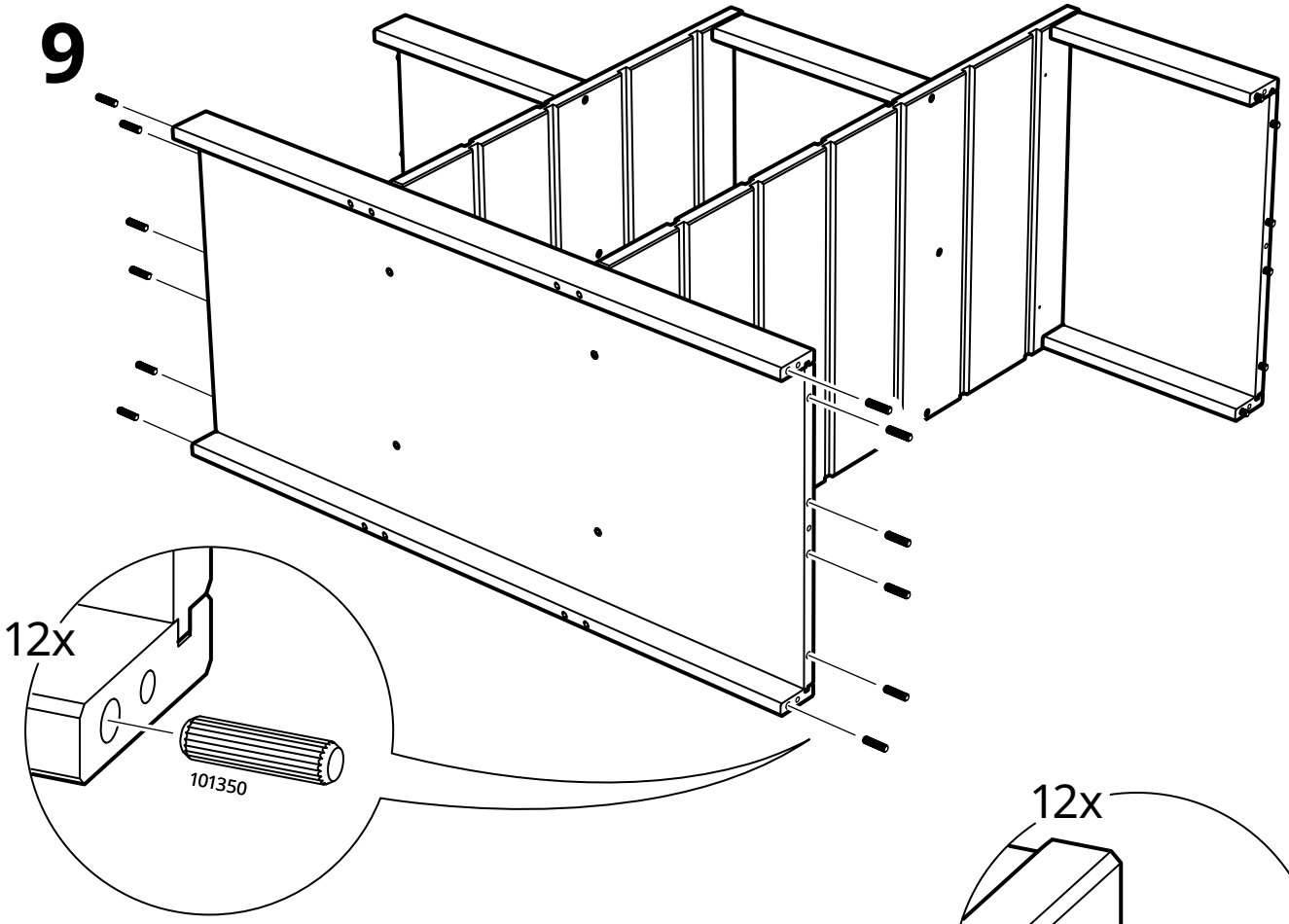

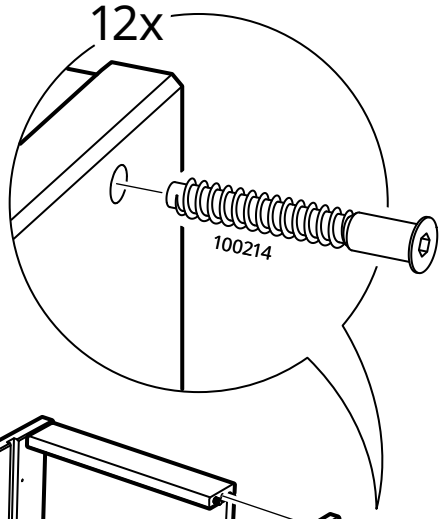

10

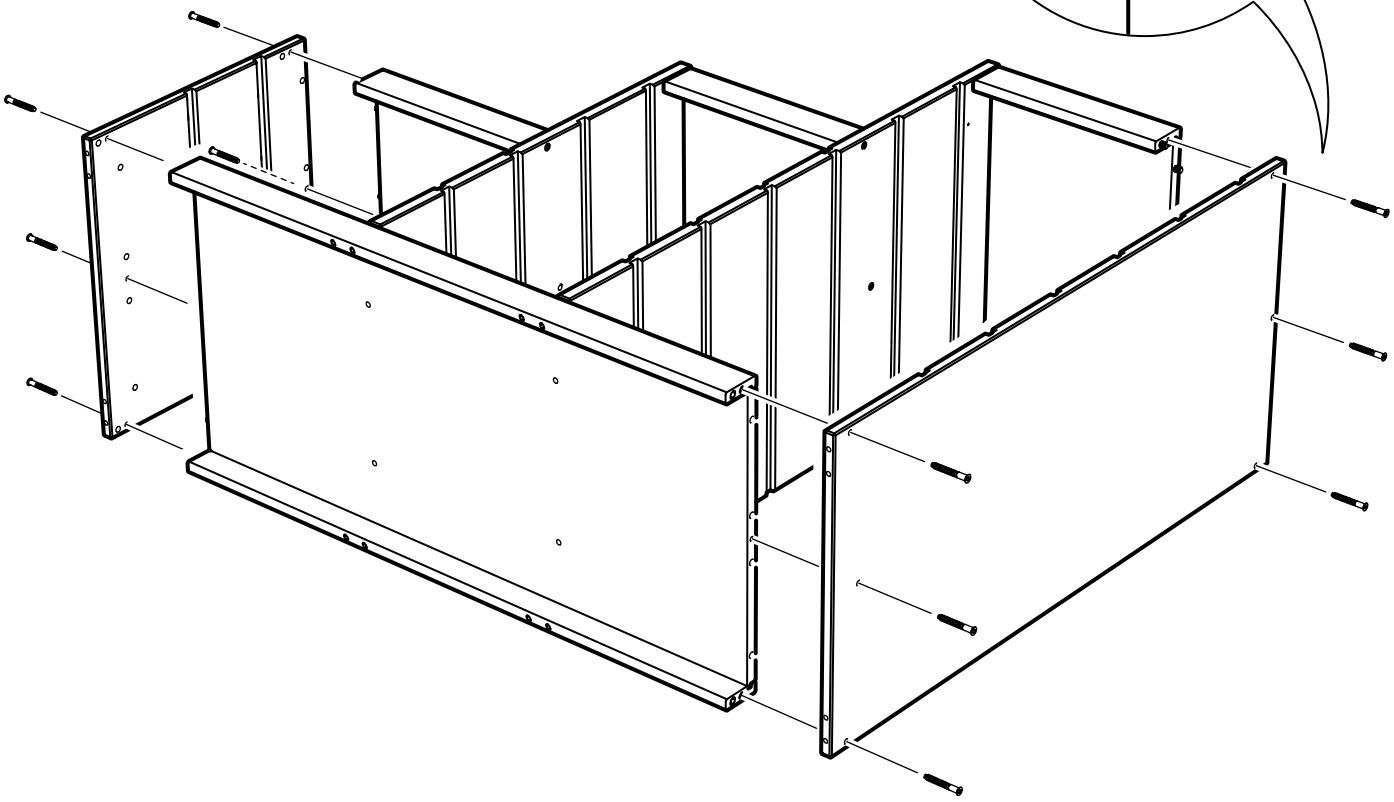

11

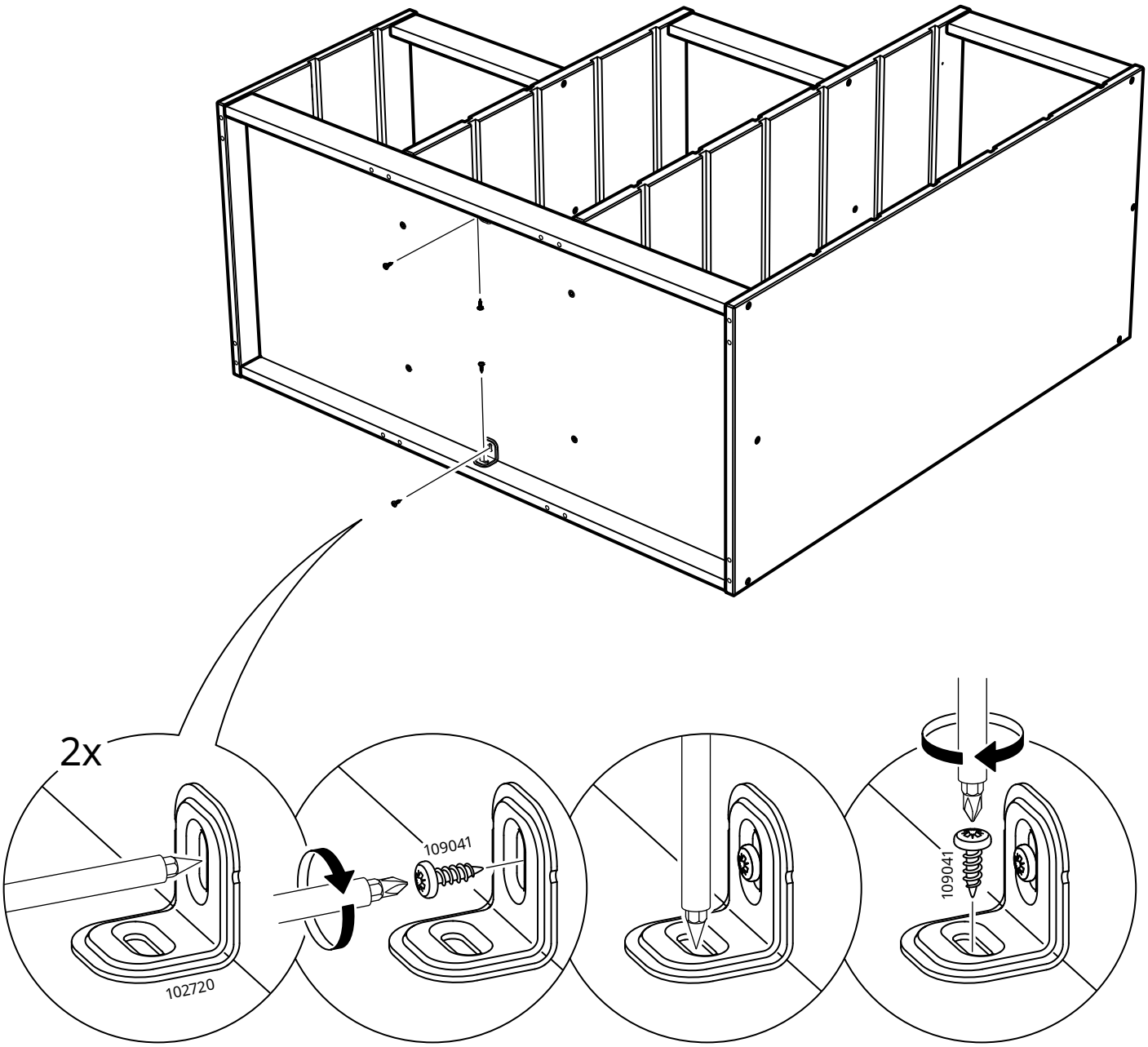

12

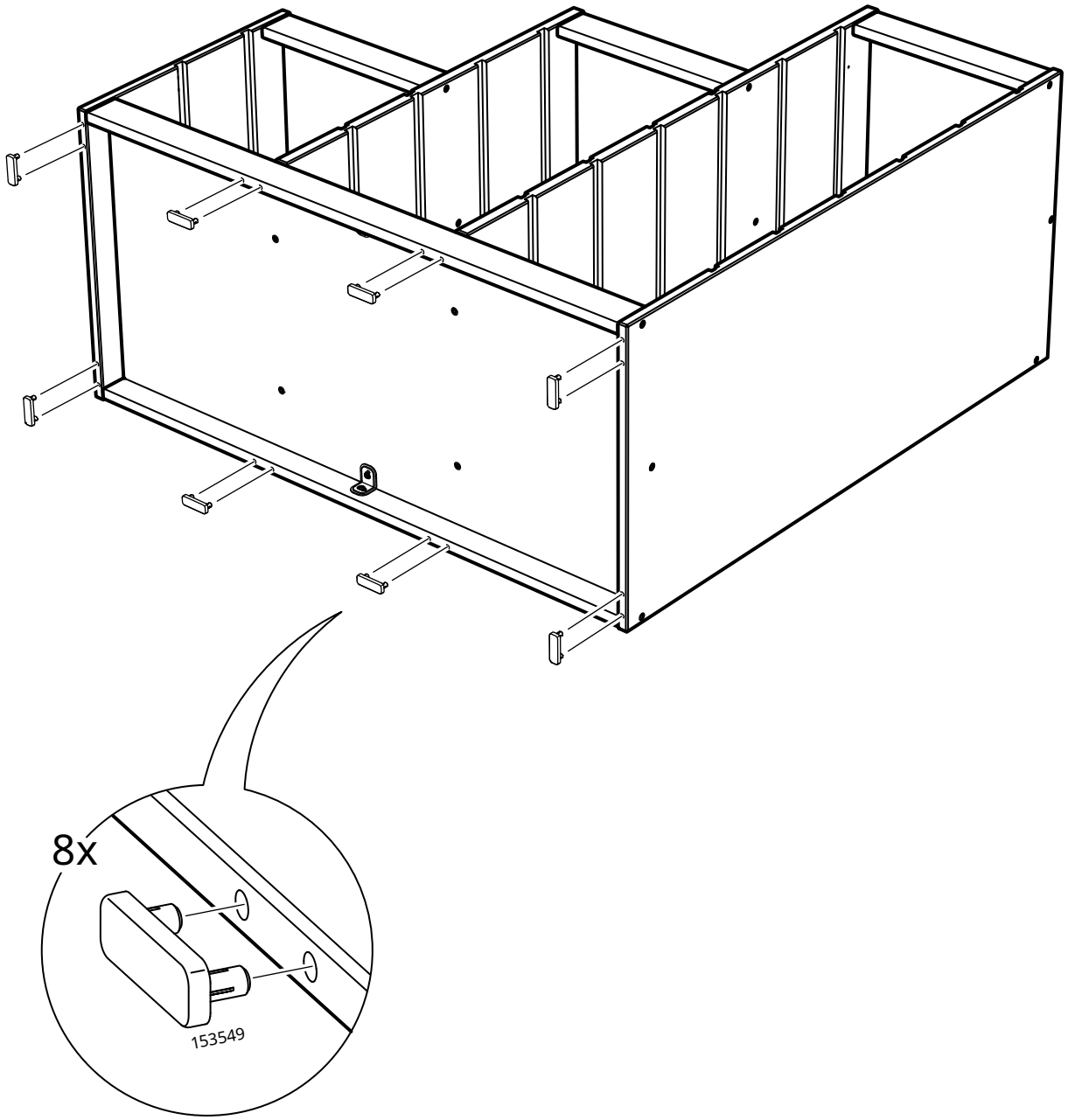

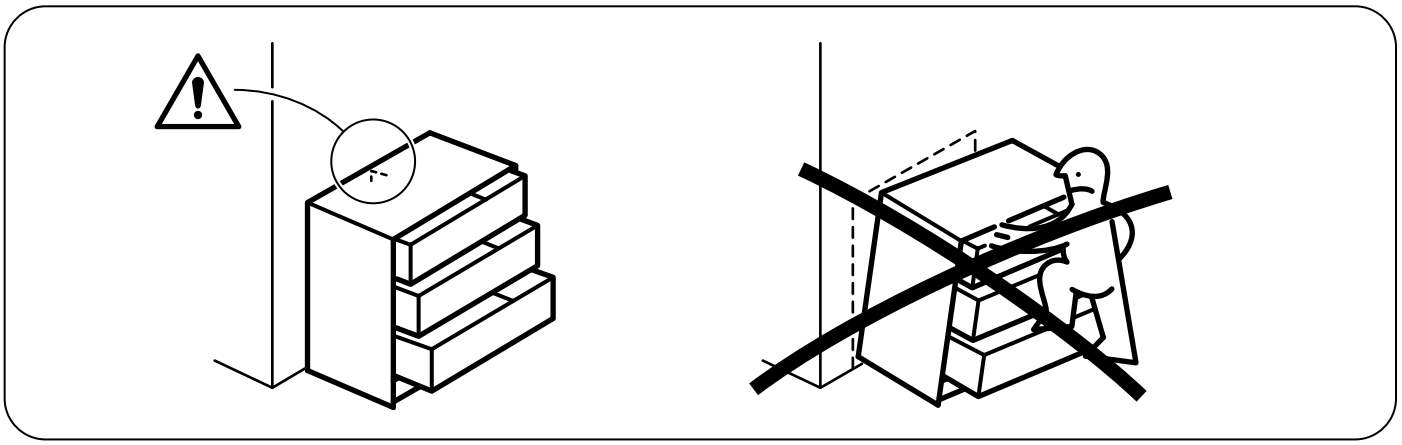

13

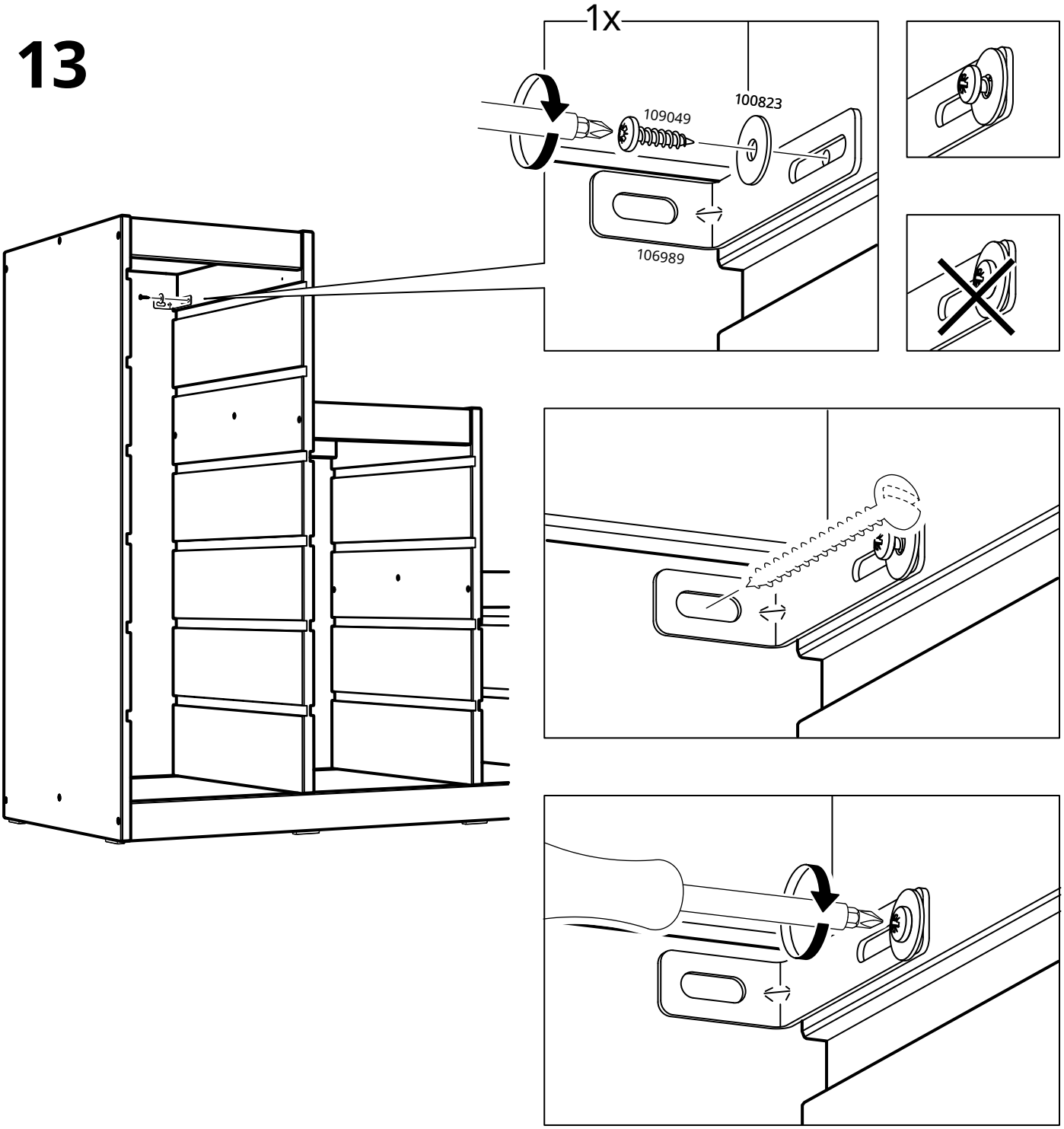

© Inter IKEA Systems B.V. 2024