Cat. No. W380-E1-08

SYSMAC CS/CJ Series
CS Series: CS1W-DRM21(-V1)
CJ Series: CJ1W-DRM21
DeviceNet Units

OPERATION MANUAL

OMRON

CS-series DeviceNet Unit: CS1W-DRM21(-V1)
CJ-series DeviceNet Unit: CJ1W-DRM21
Operation Manual

Revised November 2010

Notice:

OMRON products are manufactured for use according to proper procedures by a qualified operator and only for the purposes described in this manual.

The following conventions are used to indicate and classify precautions in this manual. Always heed the information provided with them. Failure to heed precautions can result in injury to people or damage to property.

⚠ DANGER Indicates an imminently hazardous situation which, if not avoided, will result in death or serious injury. Additionally, there may be severe property damage.

⚠ WARNING Indicates a potentially hazardous situation which, if not avoided, could result in death or serious injury. Additionally, there may be severe property damage.

⚠ Caution Indicates a potentially hazardous situation which, if not avoided, may result in minor or moderate injury, or property damage.

OMRON Product References

All OMRON products are capitalized in this manual. The word “Unit” is also capitalized when it refers to an OMRON product, regardless of whether or not it appears in the proper name of the product.

The abbreviation “Ch,” which appears in some displays and on some OMRON products, often means “word” and is abbreviated “Wd” in documentation in this sense.

The abbreviation “PLC” means Programmable Controller. “PC” is used, however, in some Programming Device displays to mean Programmable Controller.

Visual Aids

The following headings appear in the left column of the manual to help you locate different types of information.

Note Indicates information of particular interest for efficient and convenient operation of the product.

Reference Indicates supplementary information on related topics that may be of interest to the user.

1,2,3... 1. Indicates lists of one sort or another, such as procedures, checklists, etc.

Trademarks and Copyrights

DeviceNet is a registered trademark of the Open DeviceNet Vendor Association, Inc.

Windows, Windows 95, Windows 98, Windows Me, Windows NT, and Windows 2000 are registered trademarks of the Microsoft Corporation.

Other product names and company names in this manual are trademarks or registered trademarks of their respective companies.

The copyright of the DeviceNet Unit belongs to OMRON Corporation.

© OMRON, 2000

All rights reserved. No part of this publication may be reproduced, stored in a retrieval system, or transmitted, in any form, or by any means, mechanical, electronic, photocopying, recording, or otherwise, without the prior written permission of OMRON.

No patent liability is assumed with respect to the use of the information contained herein. Moreover, because OMRON is constantly striving to improve its high-quality products, the information contained in this manual is subject to change without notice. Every precaution has been taken in the preparation of this manual. Nevertheless, OMRON assumes no responsibility for errors or omissions. Neither is any liability assumed for damages resulting from the use of the information contained in this publication.

TABLE OF CONTENTS

PRECAUTIONS xv

1 Intended Audience xvi
2 General Precautions xvi
3 Safety Precautions xvi
4 Operating Environment Precautions xvii
5 Application Precautions xviii
6 Conformance to EC Directives xx

SECTION 1
Features and System Configuration 1

1-1 Overview of DeviceNet 2
1-2 DeviceNet Unit Features 19
1-3 Specifications 26
1-4 Comparison with Previous Models 33
1-5 Outline of the Configurator 37
1-6 Basic Operating Procedures 40
1-7 List of Usage Methods by Purpose 46

SECTION 2
Nomenclature and Installation 49

2-1 Nomenclature and Functions 50
2-2 Installing the DeviceNet Unit 55

SECTION 3
Allocated CIO and DM Words 61

3-1 Overview of Word Allocations 62
3-2 Allocated CIO Area Words 64
3-3 Allocated DM Area Words 84

SECTION 4
Remote I/O Master Communications 95

4-1 Master Remote I/O Communications 96
4-2 Scan List 103
4-3 Fixed Allocations 105
4-4 User-set Allocations 111
4-5 Starting and Stopping Remote I/O Communications 120
4-6 Example of Ladder Programming for Remote I/O Communications 120
4-7 Errors that May Occur in Remote I/O Communications 122

TABLE OF CONTENTS

SECTION 5
Remote I/O Slave Communications 125

5-1 Slave Remote I/O Communications 126
5-2 Fixed Allocations 129
5-3 User-set Allocations 130

SECTION 6
Message Communications 137

6-1 Overview 138
6-2 FINS Commands and Responses 145
6-3 Using FINS Message Communications 149
6-4 Sending Explicit Messages 161
6-5 Receiving Explicit Messages 168

SECTION 7
Other Functions 181

7-1 Connecting to the CX-Programmer via the DeviceNet 182
7-2 Memory Card Backup Functions 186
7-3 Simple Backup Function 189

SECTION 8
Communications Timing 193

8-1 Remote I/O Communications Characteristics 194
8-2 Message Communications 200

SECTION 9
Troubleshooting and Maintenance 205

9-1 Troubleshooting with the DeviceNet Unit Indicators 206
9-2 Error Log Functions 224
9-3 Troubleshooting 228
9-4 Maintenance and Replacement 231

Appendices

A Allocation Differences from C200H DeviceNet Master Units 235
B DeviceNet Connections 241
C FINS Commands and Responses for DeviceNet Units 247
D Multi-vendor Applications 253
E DeviceNet Explicit Message Send Command for Other Manufacturer Nodes . . 263

Index 265

Revision History 269

About this Manual:

This manual describes the installation and operation of CS1W-DRM21(-V1) (see note) DeviceNet Unit for SYSMAC CJ-series PLCs and the CJ1W-DRM21 DeviceNet Unit for SYSMAC CJ-series PLCs, and includes the sections described below.

Note In this manual, both the CS1W-DRM21 and the CS1W-DRM21-V1 are indicated by the following notation: CS1W-DRM21(-V1)

Please read this manual and all manuals for related products carefully and be sure you understand the information provided before attempting to install and operate the DeviceNet Unit. Be sure to read the precautions provided in the following section.

Section 1 provides an overview of the DeviceNet network, including features, specifications, and system.

Section 2 describes the nomenclature and installation of the DeviceNet Unit.

Section 3 describes the words allocated to the DeviceNet Unit in the CIO Area and DM Area. These words both enable controlling the DeviceNet Unit and accessing Unit and network status.

Section 4 describes the remote I/O communications performed as a master by the DeviceNet Unit.

Section 5 describes the remote I/O communications performed as a slave by the DeviceNet Unit.

Section 6 describes message communications using FINS commands sent from the ladder program in the CPU Unit of the PLC.

Section 7 describes connecting to CX-Programmer via the DeviceNet and the Memory Card backup function.

Section 8 describes the time required for remote I/O communications and message communications.

Section 9 describes error processing, periodic maintenance, and troubleshooting procedures needed to keep the DeviceNet network operating properly. We recommend reading through the error processing procedures before operation so that operating errors can be identified and corrected more quickly.

The Appendices provide information on allocation differences with C200H-series DeviceNet Units, DeviceNet connections, remote programming and monitoring, Memory Card backups, FINS commands and responses, sending DeviceNet explicit message to Non-OMRON nodes, and multi-vendor applications.

The following manuals provide information on the DeviceNet and OMRON DeviceNet products.

Manual	Products	Contents	Cat. No.
CS/CJ-series DeviceNet Unit Operation Manual (This manual)	CS1W-DRM21(-V1) and CJ1W-DRM21 DeviceNet Units	Information on CS/CJ-series DeviceNet Units.	W380
DeviceNet Operation Manual	CVM1-DRM21-V1 DeviceNet Master Unit C200HW-DRM21-V1 DeviceNet Master Unit CQM1-DRT21 I/O Link Unit DRT1-series DeviceNet Slaves GT1-series DeviceNet Slaves	Information on C200H-series, CVM1, and CV-series DeviceNet Units, as well as general DeviceNet communications specifications and wiring methods.	W267
DeviceNet Configurator Ver. 2.□ Operation Manual	WS02-CFDC1-E DeviceNet Configurator 3G8F5-DRM21-E ISA Board 3G8E2-DRM21-EV1 PCMCIA Board	Information on using the Configurator.	W382
DRT2 Series DeviceNet Slaves Operation Manual	DRT2-ID/OD/MD32SL(H)(-1) DRT2-MD16S DRT2 Series	Information on DRT2-series DeviceNet Slaves.	W404
DeviceNet Slaves Operation Manual	C200HW-DRT21 CQM1-DRT21 DRT1 Series	Information on DeviceNet Slaves.	W347

About this Manual, Continued

Manual	Products	Contents	Cat. No.
DeviceNet MULTIPLE I/O TERMINAL Operation Manual	DRT1-COM GT1 Series	Information on MULTIPLE I/O TERMINALs, one type of DeviceNet slave.	W348
DeviceNet Master Units Operation Manual	C200HW-DRM21-V1 CVM1-DRM21-V1	Information on C200H and CVM1/CV-series DeviceNet Master Units.	W379
SYSMAC CS/CJ/CP/NSJ Series Communications Commands Reference Manual	CS1G/H-CPU□□-EV1, CS1G/H-CPU□□H, CS1D-CPU□□H, CS1D-CPU□□S, CJ1H-CPU□□H-R, CJ1G-CPU□□, CJ1M-CPU□□, CJ1G-CPU□□P, CJ1G/H-CPU□□H, CJ2H-CPU6□-EIP, CJ2H-CPU6□, CJ2M-CPU□□, CS1W-SCU□□-V1, CS1W-SCB□□-V1, CJ1W-SCU□□-V1, CP1H-X□□□□-□, CP1H-XA□□□□-□, CP1H-Y□□□□-□, CP1L-M/L□□□-□, CP1E-E□□D□-□, CP1E-N□□D□-□, NSJ□-□□□□(B)-G5D, NSJ□-□□□□(B)-M3D	Describes the communications commands used with CS-series, CJ-series, and CP-series PLCs and NSJ Controllers.	W342
CX-Programmer Operation Manual	CXONE-AL□□C-V4/AL□□D-V4	Information on setting and monitoring networks, such as the use of routing tables.	W446

⚠ WARNING Failure to read and understand the information provided in this manual may result in personal injury or death, damage to the product, or product failure. Please read each section in its entirety and be sure you understand the information provided in the section and related sections before attempting any of the procedures or operations given.

Read and Understand this Manual

Please read and understand this manual before using the product. Please consult your OMRON representative if you have any questions or comments.

Warranty and Limitations of Liability

WARRANTY
OMRON's exclusive warranty is that the products are free from defects in materials and workmanship for a period of one year (or other period if specified) from date of sale by OMRON. OMRON MAKES NO WARRANTY OR REPRESENTATION, EXPRESS OR IMPLIED, REGARDING NON-INFRINGEMENT, MERCHANTABILITY, OR FITNESS FOR PARTICULAR PURPOSE OF THE PRODUCTS. ANY BUYER OR USER ACKNOWLEDGES THAT THE BUYER OR USER ALONE HAS DETERMINED THAT THE PRODUCTS WILL SUITABLY MEET THE REQUIREMENTS OF THEIR INTENDED USE. OMRON DISCLAIMS ALL OTHER WARRANTIES, EXPRESS OR IMPLIED.

LIMITATIONS OF LIABILITY
OMRON SHALL NOT BE RESPONSIBLE FOR SPECIAL, INDIRECT, OR CONSEQUENTIAL DAMAGES, LOSS OF PROFITS OR COMMERCIAL LOSS IN ANY WAY CONNECTED WITH THE PRODUCTS, WHETHER SUCH CLAIM IS BASED ON CONTRACT, WARRANTY, NEGLIGENCE, OR STRICT LIABILITY. In no event shall the responsibility of OMRON for any act exceed the individual price of the product on which liability is asserted. IN NO EVENT SHALL OMRON BE RESPONSIBLE FOR WARRANTY, REPAIR, OR OTHER CLAIMS REGARDING THE PRODUCTS UNLESS OMRON'S ANALYSIS CONFIRMS THAT THE PRODUCTS WERE PROPERLY HANDLED, STORED, INSTALLED, AND MAINTAINED AND NOT SUBJECT TO CONTAMINATION, ABUSE, MISUSE, OR INAPPROPRIATE MODIFICATION OR REPAIR.

Application Considerations

SUITABILITY FOR USE

OMRON shall not be responsible for conformity with any standards, codes, or regulations that apply to the combination of products in the customer's application or use of the products.

At the customer's request, OMRON will provide applicable third party certification documents identifying ratings and limitations of use that apply to the products. This information by itself is not sufficient for a complete determination of the suitability of the products in combination with the end product, machine, system, or other application or use.

The following are some examples of applications for which particular attention must be given. This is not intended to be an exhaustive list of all possible uses of the products, nor is it intended to imply that the uses listed may be suitable for the products:

- Outdoor use, uses involving potential chemical contamination or electrical interference, or conditions or uses not described in this manual.
- Nuclear energy control systems, combustion systems, railroad systems, aviation systems, medical equipment, amusement machines, vehicles, safety equipment, and installations subject to separate industry or government regulations.
- Systems, machines, and equipment that could present a risk to life or property.

Please know and observe all prohibitions of use applicable to the products.

NEVER USE THE PRODUCTS FOR AN APPLICATION INVOLVING SERIOUS RISK TO LIFE OR PROPERTY WITHOUT ENSURING THAT THE SYSTEM AS A WHOLE HAS BEEN DESIGNED TO ADDRESS THE RISKS, AND THAT THE OMRON PRODUCTS ARE PROPERLY RATED AND INSTALLED FOR THE INTENDED USE WITHIN THE OVERALL EQUIPMENT OR SYSTEM.

PROGRAMMABLE PRODUCTS

OMRON shall not be responsible for the user's programming of a programmable product, or any consequence thereof.

Disclaimers

CHANGE IN SPECIFICATIONS

Product specifications and accessories may be changed at any time based on improvements and other reasons.

It is our practice to change model numbers when published ratings or features are changed, or when significant construction changes are made. However, some specifications of the products may be changed without any notice. When in doubt, special model numbers may be assigned to fix or establish key specifications for your application on your request. Please consult with your OMRON representative at any time to confirm actual specifications of purchased products.

DIMENSIONS AND WEIGHTS

Dimensions and weights are nominal and are not to be used for manufacturing purposes, even when tolerances are shown.

PERFORMANCE DATA

Performance data given in this manual is provided as a guide for the user in determining suitability and does not constitute a warranty. It may represent the result of OMRON's test conditions, and the users must correlate it to actual application requirements. Actual performance is subject to the OMRON Warranty and Limitations of Liability.

ERRORS AND OMISSIONS

The information in this manual has been carefully checked and is believed to be accurate; however, no responsibility is assumed for clerical, typographical, or proofreading errors, or omissions.

PRECAUTIONS

This section provides general precautions for using the DeviceNet Unit and related devices.

The information contained in this section is important for the safe and reliable application of the DeviceNet Unit and Programmable Controller (PLC) You must read this section and understand the information contained before attempting to set up or operate a DeviceNet Unit as part of a PLC.

1 Intended Audience xvi
2 General Precautions xvi
3 Safety Precautions xvi
4 Operating Environment Precautions xvii
5 Application Precautions xviii
6 Conformance to EC Directives xx
6-1 Applicable Directives xx
6-2 Concepts xx
6-3 Conformance to EC Directives xx

1 Intended Audience

This manual is intended for the following personnel, who must also have knowledge of electrical systems (an electrical engineer or the equivalent).

- Personnel in charge of installing FA systems.
- Personnel in charge of designing FA systems.
- Personnel in charge of managing FA systems and facilities.

2 General Precautions

The user must operate the product according to the performance specifications described in the operation manuals.

Before using the product under conditions which are not described in the manual or applying the product to nuclear control systems, railroad systems, aviation systems, vehicles, combustion systems, medical equipment, amusement machines, safety equipment, and other systems, machines, and equipment that may have a serious influence on lives and property if used improperly, consult your OMRON representative.

Make sure that the ratings and performance characteristics of the product are sufficient for the systems, machines, and equipment, and be sure to provide the systems, machines, and equipment with double safety mechanisms.

This manual provides information for installing and operating the DeviceNet Unit. Be sure to read this manual before operation and keep this manual close at hand for reference during operation.

⚠ WARNING It is extremely important that a PLC and all PLC Units be used for the specified purpose and under the specified conditions, especially in applications that can directly or indirectly affect human life. You must consult with your OMRON representative before applying a PLC System to the above mentioned applications.

3 Safety Precautions

⚠ WARNING Never attempt to disassemble a Unit or touch the inside of Unit while power is being supplied. Doing so may result in serious electrical shock or electrocution.

⚠ WARNING Provide safety measures in external circuits, i.e., not in the Programmable Controller (CPU Unit including associated Units; referred to as “PLC”), in order to ensure safety in the system if an abnormality occurs due to malfunction of the PLC or another external factor affecting the PLC operation. Not doing so may result in serious accidents.

- Emergency stop circuits, interlock circuits, limit circuits, and similar safety measures must be provided in external control circuits.
- The PLC will turn OFF all outputs when its self-diagnosis function detects any error or when a severe failure alarm (FALS) instruction is executed. Unexpected operation, however, may still occur for errors in the I/O control section, errors in I/O memory, and other errors that cannot be detected by the self-diagnosis function. As a countermeasure for all such errors, external safety measures must be provided to ensure safety in the system.

- The PLC outputs may remain ON or OFF due to deposition or burning of the output relays or destruction of the output transistors. As a countermeasure for such problems, external safety measures must be provided to ensure safety in the system.
- When the 24-VDC output (service power supply to the PLC) is overloaded or short-circuited, the voltage may drop and result in the outputs being turned OFF. As a countermeasure for such problems, external safety measures must be provided to ensure safety in the system.

⚠ **WARNING** The CPU Unit refreshes I/O even when the program is stopped (i.e., even in PROGRAM mode). Confirm safety thoroughly in advance before changing the status of any part of memory allocated to I/O Units, Special I/O Units, or CPU Bus Units. Any changes to the data allocated to any Unit may result in unexpected operation of the loads connected to the Unit. Any of the following operation may result in changes to memory status.

- Transferring I/O memory data to the CPU Unit from a Programming Device.
- Changing present values in memory from a Programming Device.
- Force-setting/-resetting bits from a Programming Device.
- Transferring I/O memory files from a Memory Card or EM file memory to the CPU Unit.
- Transferring I/O memory from a host computer or from another PLC on a network.

⚠ **Caution** Execute online edit only after confirming that no adverse effects will be caused by extending the cycle time. Otherwise, the input signals may not be readable.

⚠ **Caution** Confirm safety at the destination node before transferring a program to another node or changing contents of the I/O memory area. Doing either of these without confirming safety may result in injury.

4 Operating Environment Precautions

Do not install the Unit in any of the following locations.

- Locations subject to direct sunlight.
- Locations subject to temperatures or humidities outside the range specified in the specifications.
- Locations subject to condensation as the result of severe changes in temperature.
- Locations subject to corrosive or flammable gases.
- Locations subject to dust (especially iron dust) or salt.
- Locations subject to exposure to water, oil, or chemicals.
- Locations subject to shock or vibration.

Provide proper shielding when installing in the following locations:

- Locations subject to static electricity or other sources of noise.
- Locations subject to strong electromagnetic fields.
- Locations subject to possible exposure to radiation.
- Locations near to power supply lines.

⚠ **Caution** The operating environment of the PLC System can have a large effect on the longevity and reliability of the system. Improper operating environments can lead to malfunction, failure, and other unforeseeable problems with the PLC System. Be sure that the operating environment is within the specified conditions at installation and remains within the specified conditions during the life of the system.

5 Application Precautions

Observe the following precautions when using the DeviceNet Unit.

⚠ **WARNING** Failure to abide by the following precautions could lead to serious or possibly fatal injury. Always heed these precautions.

- Always connect to a class-3 ground (100 Ω or less) when installing the Units.

⚠ **Caution** Failure to abide by the following precautions could lead to faulty operation or the PLC or the system or could damage the PLC or PLC Units. Always heed these precautions.

- Install double safety mechanisms to ensure safety against incorrect signals that may be produced by broken signal lines or momentary power interruptions.
- Enable the scan list to before operating the system.
- When adding a new node to the network, make sure that the baud rate is the same as other nodes.
- Use specified communications cables.
- Do not extend connection distances beyond the ranges given in the specifications.
- Always turn OFF the power supply to the personal computer, Slaves, and Communications Units before attempting any of the following.
  - Mounting or dismounting the DeviceNet Unit, Power Supply Units, I/O Units, CPU Units, or any other Units.
  - Assembling a Unit.
  - Setting DIP switches or rotary switches.
  - Connecting or wiring the cables.
  - Connecting or disconnecting connectors.
- Be sure that the terminal blocks, connectors, Memory Units, expansion cables, and other items with locking devices are properly locked into place. Improper locking may result in malfunction.
- Be sure that all the mounting screws, terminal screws, Unit mounting screws, and cable connector screws are tightened to the torque specified in the relevant manuals. Incorrect tightening torque may result in malfunction.
- Leave the label attached to the Unit when wiring. Removing the label may result in malfunction if foreign matter enters the Unit.
- Remove the label after the completion of wiring to ensure proper heat dissipation. Leaving the label attached may result in malfunction.
- Always use the power supply voltage specified in this manual.

- Double-check all the wiring and connection of terminal blocks and connectors before mounting the Units.
- Use crimp terminals for wiring. Do not connect bare stranded wires directly to terminals.
- Observe the following precautions when wiring the communications cable.
  - Separate the communications cables from the power lines or high-tension lines.
  - Do not bend the communications cables.
  - Do not pull on the communications cables.
  - Do not place heavy objects on top of the communications cables.
  - Be sure to wire communications cable inside ducts.
  - Use appropriate communications cables.
- Take appropriate measures to ensure that the specified power with the rated voltage and frequency is supplied in places where the power supply is unstable. An incorrect power supply may result in malfunction.
- Install external breakers and take other safety measures against short-circuiting in external wiring. Insufficient safety measures against short-circuiting may result in burning.
- Double-check all the wiring and switch settings before turning ON the power supply.
- Check the user program for proper execution before actually running it on the Unit. Not checking the program may result in an unexpected operation.
- Confirm that no adverse effect will occur in the system before attempting any of the following. Not doing so may result in an unexpected operation.
  - Changing the operating mode of the PLC.
  - Force-setting/force-resetting any bit in memory.
  - Changing the present value of any word or any set value in memory.
- After replacing Units, resume operation only after transferring to the new CPU Unit and/or Special I/O Units the contents of the DM Area, HR Area, and other data required for resuming operation. Not doing so may result in an unexpected operation.
- When transporting or storing the product, cover the PCBs with electrically conductive materials to prevent LSIs and ICs from being damaged by static electricity, and also keep the product within the specified storage temperature range.
- When transporting the Unit, use special packing boxes and protect it from being exposed to excessive vibration or impacts during transportation.
- Do not attempt to disassemble, repair, or modify any Units.

6 Conformance to EC Directives

6-1 Applicable Directives

- EMC Directives

6-2 Concepts

EMC Directives

OMRON devices that comply with EC Directives also conform to the related EMC standards so that they can be more easily built into other devices or machines. The actual products have been checked for conformity to EMC standards. (See the following note.) Whether the products conform to the standards in the system used by the customer, however, must be checked by the customer.

EMC-related performance of the OMRON devices that comply with EC Directives will vary depending on the configuration, wiring, and other conditions of the equipment or control panel in which the OMRON devices are installed. The customer must, therefore, perform final checks to confirm that devices and the overall machine conform to EMC standards.

Note Applicable EMS (Electromagnetic Susceptibility) and EMI (Electromagnetic Interference standards in the EMC (Electromagnetic Compatibility) standards are as follows:

Unit	EMS	EMI
CS1W-DRM21(-V1)	EN61000-6-2	EN61000-6-4
CJ1W-DRM21		

6-3 Conformance to EC Directives

DeviceNet products that meet EC directives must be installed as follows:

1,2,3...

1. DeviceNet Units are designed for installation inside control panels. All DeviceNet Units must be installed within control panels.
2. Used reinforced insulation or double insulation for the DC power supplies used for the communications power supply, internal circuit power supply, and the I/O power supplies.
3. DeviceNet products that meet EC directives also meet the common emission standard (EN61000-6-4). When DeviceNet products are built into equipment, however, the measure necessary to ensure that the standard is met will vary with the overall configuration of the control panel, the other devices connected to the control panel, and other conditions. You must therefore confirm that EC directives are met for the overall machine or device, particularly for the radiated emission requirement (10 m).

The following examples show means of reducing noise.

1,2,3....

1. Noise from the communications cable can be reduced by installing a ferrite core on the communications cable within 10 cm of the DeviceNet Unit.

Ferrite Core (Data Line Filter): 0443-164151 (manufactured by Fair-Rite Products Co., Ltd.)

Impedance specifications
25 MHZ: 156 Ω
100 MHZ: 250 Ω

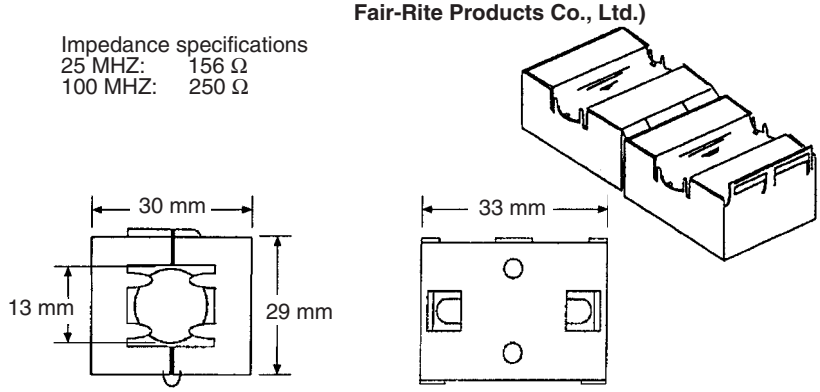

2. Wire the control panel with as thick and short electric lines as possible and ground to 100 Ω min.
3. Keep DeviceNet communications cables as short as possible and ground to 100 Ω min.

SECTION 1
Features and System Configuration

This section provides an overview of the DeviceNet network, including features, specifications, and system configurations.

1-1 Overview of DeviceNet 2
1-1-1 Overall System Configuration 3
1-1-2 Applicable Units and DeviceNet Functions 6
1-1-3 Masters 9
1-1-4 Types of Slave 9
1-1-5 DeviceNet Configurator 19
1-2 DeviceNet Unit Features 19
1-3 Specifications 26
1-3-1 DeviceNet Unit 26
1-3-2 Comparison between CS1W-DRM21(-V1) and CJ1W-DRM21 . . . 32
1-4 Comparison with Previous Models 33
1-5 Outline of the Configurator 37
1-5-1 Models 37
1-5-2 Configurator Specifications 38
1-6 Basic Operating Procedures 40
1-6-1 Network Installation Procedure 40
1-6-2 Hardware Preparations for Communications 40
1-6-3 Creating Routing Tables 41
1-6-4 Procedures Prior to Starting Communications 42
1-7 List of Usage Methods by Purpose 46

1-1 Overview of DeviceNet

DeviceNet is a multi-bit, multi-vendor network that combines controls and data on a machine/line-control level and that conforms to DeviceNet open field network specifications.

Three types of communications are supported: 1) Remote I/O master communications that automatically transfer I/O between slaves and the CPU Unit to which a DeviceNet Unit is mounted without any special programming in the CPU Unit, 2) Remote I/O slave communications that automatically transfer I/O between the Master and the CPU Unit to which a DeviceNet Unit is mounted, and 3) Message communications that read/write messages, control operation, or perform other functions for other CPU Units to which a DeviceNet Unit is mounted and slaves. Message communications are achieved by executing specific instructions (SEND (192), RECV (193), and CMND (194)) from the program in the CPU Unit to which the DeviceNet Unit is mounted.

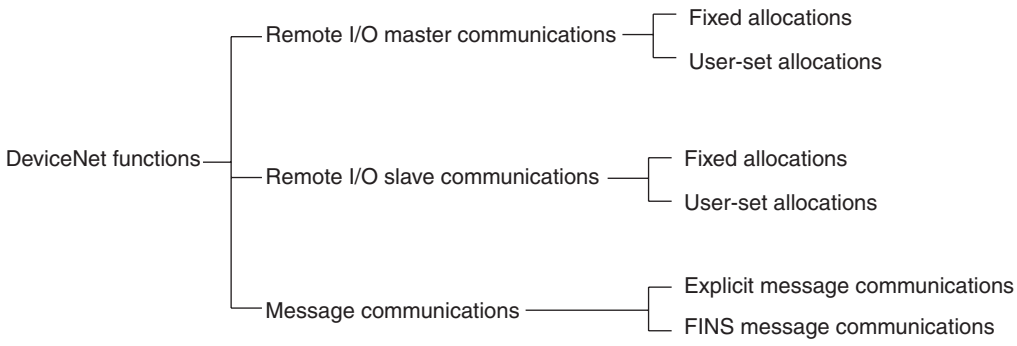

The following functions are supported with a CS/CJ-series DeviceNet Unit.

1,2,3...

1. Without the Configurator Software Tool
   a) I/O area words can be flexibly allocated for remote I/O Master and Slave communications. Three types of fixed allocations as well as user-set allocations through allocated DM Area words are possible.
   b) More than one DeviceNet Unit can be mounted under a single PLC.
   c) More than one DeviceNet Unit can be connected in a single network. With the Configurator, remote I/O can be allocated in any order, i.e., not necessarily in the other of node addresses.

   Note The Configurator that is connected through a dedicated Board or Card uses one node in the DeviceNet network. It does not use a node if it is connected by a serial line.
2. A CS/CJ-series DeviceNet Unit can function as either a master or slave in remote I/O communications. Both can be used simultaneously.
3. With a CS/CJ-series DeviceNet Unit, the DeviceNet network can be treated exactly like a Controller Link, Ethernet, or other network for message communications or remote programming and monitoring by a CX-Programmer.

1-1-1 Overall System Configuration

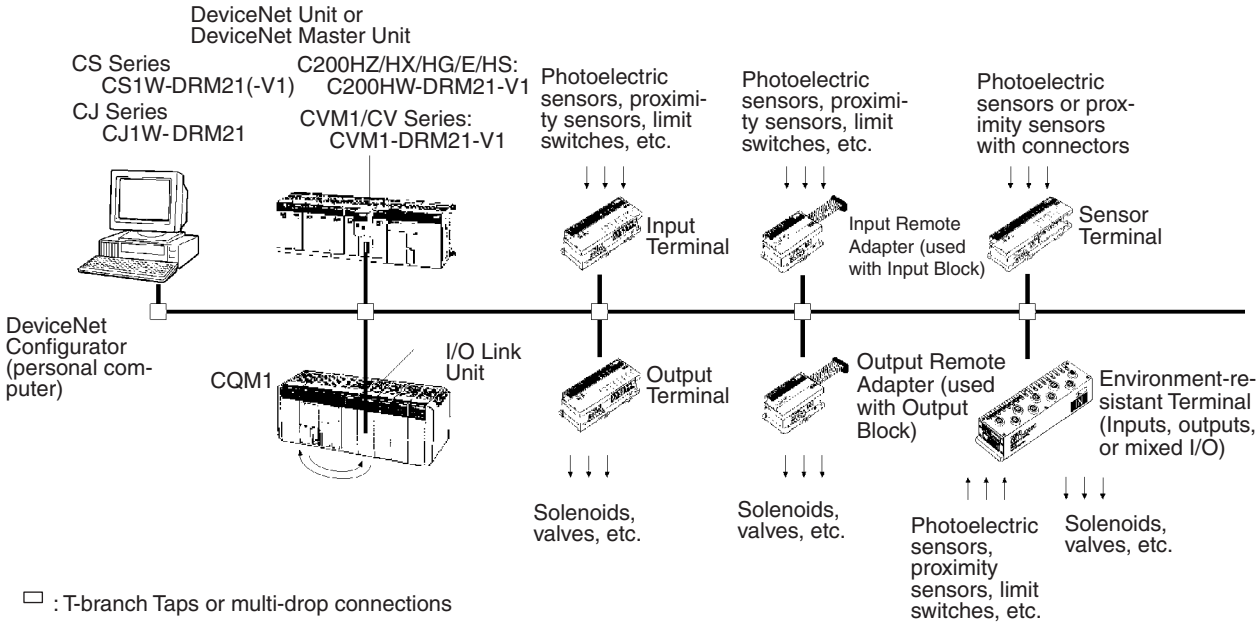

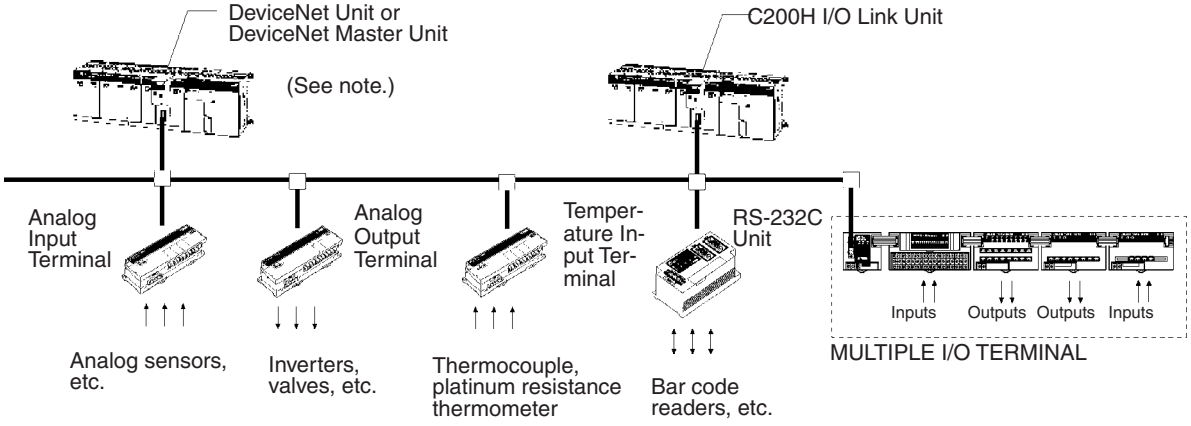

Note The Configurator is required if more than one Master is connected in a single network when a CVM1-DRM21-V1 or C200HW-DRM21-V1 is used.

Master Features

DeviceNet Master Units and DeviceNet Units

Support remote I/O communications between OMRON PLCs (CS-series, CJ-series, CVM1, CV-series, or C200HX/HG/HE/HS) and slaves.

Support message communications between OMRON PLCs, or between an OMRON PLC and slaves and masters from other companies.

VME Master Boards

Supports remote I/O communications between a VME System and slaves.

Configurator Features

- Enables user-set allocations for remote I/O (choice of node address order, 2 area allocations, etc.).
- Enables serial connection to the Programming Device Port of a PLC.
- Enables user settings for DeviceNet remote I/O communications connections.
- Enables multiple Masters on a single PLC.
- Enables multiple Masters in a single network.

Slave Features

I/O Terminals

- Provide general-purpose I/O via terminal blocks (M3).
- Available in the following models:
  - 8-point Transistor Input Terminal
  - 16-point Transistor Input Terminal
  - 8-point Transistor Output Terminal
  - 16-point Transistor Output Terminal

Environment-resistant Terminals

- Improved I/O Terminals that conform to IP66 for spatter-, water-, and oil-resistance.
- Available in the following models:
  - 8-point Transistor Input Terminal
  - 8-point Transistor Output Terminal
  - 16-point Transistor I/O Terminal (8 inputs and 8 outputs)

Remote Adapters

- Used in combination with G70D and other I/O Blocks to handle relay outputs, power MOS FET Relay outputs, etc.
- Available in 16-point input and 16-point output models.

I/O Link Units

- More than one I/O Link Unit can be mounted to a CQM1 PLC.
- Link 16 inputs and 16 outputs between the PLC and the Master.

Sensor Terminals

- Accept inputs from photoelectric and proximity sensors with connectors.
- Available in 16-point input and 8-point input/8-point output models.
- Output signals can be used for sensor teaching and external diagnosis.

Analog Input Terminals

- Convert analog inputs to binary.
- Switchable between 2 and 4 input points using the DIP switch.
- Handle inputs of 0 to 5 V, 1 to 5 V, 0 to 10 V, –10 to +10 V, 0 to 20 mA, or 4 to 20 mA.
- Available in models with a resolution of either 1/6,000 or 1/3,000.

Analog Output Terminals

- Convert binary data to analog outputs.
- Provides outputs of 1 to 5 V, 0 to 10 V, –10 to +10 V, 0 to 20 mA, or 4 to 20mA.

- Available in models with a resolution of 1/6,000.

Temperature Input Terminals

- Temperature data is input as binary data for 4 inputs.
- Thermocouple and platinum resistance thermometer inputs are available.

C200H I/O Link Units

- Special I/O Slaves that mount to C200HX/HG/HE PLCs and read/write data from the Master to the specified words in the CPU Unit.
- Read and write areas specified for up to 512 bits each (32 words each).
- Any memory area words can be read or written using DeviceNet explicit messages.

RS-232C Units

- Special I/O Slaves that provide two RS-232C ports and control I/O from the Masters.

MULTIPLE I/O TERMINALs

- Multiple I/O Units can be combined under a Communications Unit and treated as a single Slave.
- Special I/O Units, such as Analog I/O Units, and High-speed Counter Units are also available.

1-1-2 Applicable Units and DeviceNet Functions

Remote I/O Masters

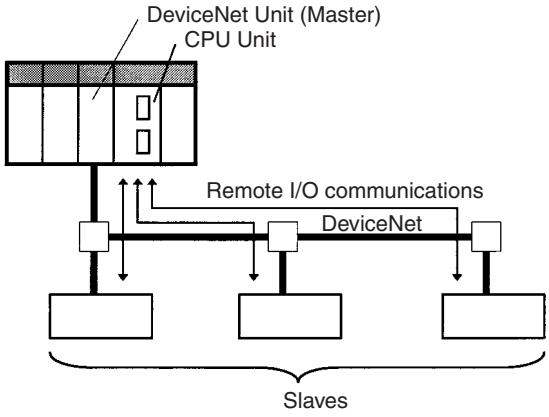

Item	Master	Model	Without Configurator	With Configurator
Max. No. of Slave nodes per Master	CS Series	CS1W-DRM21(-V1)	63 nodes	
	CJ Series	CJ1W-DRM21		
	CVM1, CV Series	CVM1-DRM21-V1		
	CS Series, C200HX/HG/HE	C200HW-DRM21-V1	50 nodes	63 nodes
	C200HS		32 nodes	63 nodes
Max. No. of control points per Master	CS Series	CS1W-DRM21(-V1)	2,048 pts (64 input /64 output words) or 16,000 pts (500 input/ 500 output words)	32,000 pts (500 words x 4 blocks)
	CJ Series	CJ1W-DRM21		
	CVM1, CV Series	CVM1-DRM21-V1	2,048 pts (64 input/ 64 output words)	6,400 (100 words x 4 blocks
	CS Series, C200HX/HG/HE	C200HW-DRM21-V1	1,600 pts (50 input/50 output words)	Without messages: 4,800 pts With messages: 1,600 pts
	C200HS		1,024 pts (32 input/32 output words)	1,280
Max. No. of I/O points per Slave controllable by Master	CS Series	CS1W-DRM21(-V1)	100 input/100 output words	
	CJ Series	CJ1W-DRM21		
	CVM1, CV Series	CVM1-DRM21-V1	32 input/32 output words	
	CS Series, C200HX/HG/HE	C200HW-DRM21-V1		
	C200HS			
Remote I/O allocation areas	CS Series	CS1W-DRM21(-V1)	CS/CJ DeviceNet words in CIO Area, and user-allocated words in CIO Area, DM Area, and other areas.	User-allocated words in CIO Area, DM Area, and other areas.
	CJ Series	CJ1W-DRM21		
	CVM1, CV Series	CVM1-DRM21-V1	DeviceNet Area	User-allocated words in CIO Area, DM Area, and other areas.
	CS Series, C200HX/HG/HE	C200HW-DRM21-V1	C200H DeviceNet words in CIO Area (including dedicated words/ bits)	
	C200HS			

Remote I/O Slaves (only Units Mounted in a PLC)

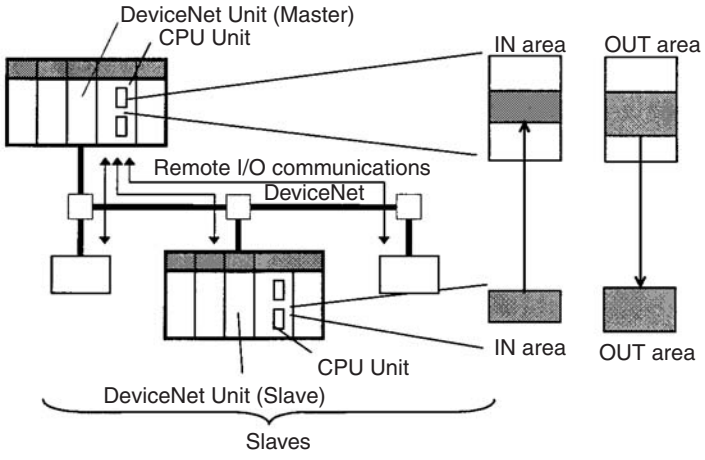

Item	CPU Unit to which a Slave is mounted	Unit Model	Without the Configurator	With the Configurator
Max. No. of I/O pts per Slave	CS Series	CS1W-DRM21(-V1)	32 pts (1 input/ 1 output word) or 3,200 pts (100 input/100 output words)	4,800 pts (100 input words x 2/100 output words x 1)
	CJ Series	CJ1W-DRM21		
	CS Series, C200HX/HG/HE	C200HW-DRT21	1,024 pts (32 input/32 output words)	
	CQM1H CQM1 Series	CQM1-DRT21	32 pts (1 input/1 output word)	
Allocation areas in the CPU Unit to which this Slave is mounted	CS Series	CS1W-DRM21(-V1)	CIO, WR, DM, EM, HR	
	CJ Series	CJ1W-DRM21		
	CS Series, C200HX/HG/HE	C200HW-DRT21	CIO, DM, EM, AR, LR, T/C	
	CQM1H CQM1 Series	CQM1-DRT21	CIO	

Message Communications

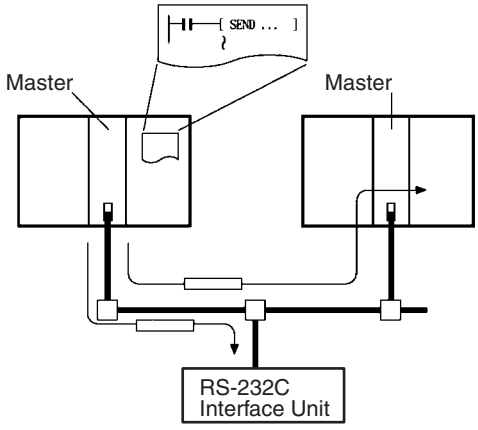

Communications Instructions

Master	Unit model	Send	Receive	FINS commands
CS Series	CS1W-DRM21(-V1)	SEND(192)	RECV(193)	CMND(194)
CJ Series	CJ1W-DRM21			
CVM1, CV Series	CVM1-DRM21-V1	SEND(192)	RECV(193)	CMND(194)
CS Series, C200HX/HG/HE	C200HW-DRM21-V1	None	None	IOWR
C200HS		---		

Item	Master model	Model	Capacity
Max. No. of nodes per Master for message communications using FINS commands	CS Series	CS1W-DRM21(-V1)	62 nodes (Node address 0 cannot be used in FINS communications.)
	CJ Series	CJ1W-DRM21	
	CVM1, CV Series	CVM1-DRM21-V1	8 nodes
	CS Series, C200HX/HG/HE	C200HW-DRM21-V1	8 nodes
	C200HS		Not supported
Max. No. of nodes per Master for message communications using explicit messages	CS Series	CS1W-DRM21(-V1)	63 nodes
	CJ Series	CJ1W-DRM21	
	CVM1, CV Series	CVM1-DRM21-V1	63 nodes
	CS Series, C200HX/HG/HE	C200HW-DRM21-V1	63 nodes
	C200HS		Not supported
Max. message length	CS Series	CS1W-DRM21(-V1)	SEND(192): 267 words RECV(193): 269 words CMND(194): 542 bytes (starting with command code)
	CJ Series	CJ1W-DRM21	
	CVM1, CV Series	CVM1-DRM21-V1	SEND(192): 76 words RECV(193): 78 words CMND(194): 160 bytes (starting with command code)
	CS Series, C200HX/HG/HE	C200HW-DRM21-V1	IOWR(223): 160 bytes (starting with command code)

Note FINS message communications are supported between any two PLCs with a CS/CJ-series DeviceNet Unit (CS1W-DRM21(-V1)/CJ1W-DRM21). They are not supported for PLCs with a C200H DeviceNet Master Unit (C200HW-

DRM21-V1) or a CVM1/CV-series DeviceNet Master Unit (CVM1-DRM21-V1). Refer to *6-3 Using FINS Message Communications* for details.

Communications Software Switches and Communications Status

Dedicated words in the CPU Unit are allocated for DeviceNet communications software switches and status.

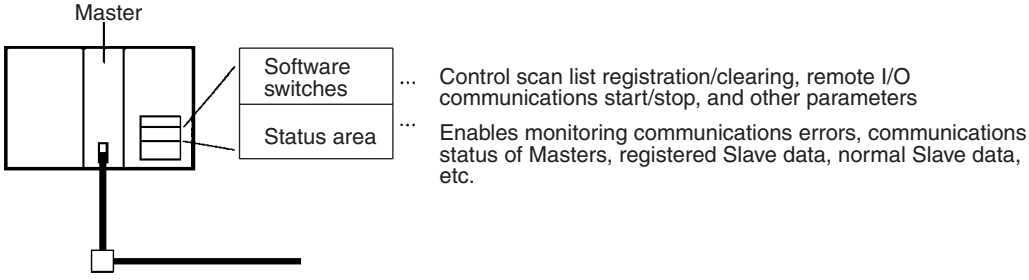

1-1-3 Masters

PLC	Model	Mountable position	Master/Slave function	Maximum number of mountable units	
				With Configurator	Without Configurator
CS Series	CS1W-DRM21(-V1) DeviceNet Unit	CPU or Expansion CPU Rack (Classified as CPU Bus Units)	Master and Slave	16	
CJ Series	CJ1W-DRM21	CPU Rack or Expansion Rack (Classified as CPU Bus Units)			
CVM1/CV Series	CVM1-DRM21-V1 DeviceNet Master Unit	CPU or Expansion CPU Rack (Classified as CPU Bus Units)	Master only	16	1
CS Series	C200HW-DRM21-V1 DeviceNet Master Unit	CPU Rack or Expansion I/O Rack (Classified as Special I/O Units)		16	
C200HX/HG/HE				10 or 16	
C200HS				10	

1-1-4 Types of Slave

The following classifications are used for DeviceNet Slaves.

- General-purpose Slaves:
  Slave with I/O functions for I/O that uses an ordinary connector connected to a communications cable.
- Environment-resistant Slaves:
  Slave with I/O functions for I/O that uses a round, waterproof connector connected to a communications cable.
- Special Slaves:
  Slave with functions not related to I/O (e.g., message communications) for I/O that uses an ordinary connector connected to a communications cable.
- Analog Slaves:
  Slave with I/O functions for analog values that uses an ordinary connector connected to a communications cable.

DRT1 Series

General-purpose Slaves (Communications Cable: Normal Square Connectors)

Name	Appearance	I/O points	Model number	Remarks
Remote I/O Terminals with Transistors	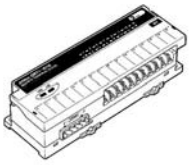	8 input points (NPN)	DRT1-ID08	---
		8 input points (PNP)	DRT1-ID08-1	
		16 input points (NPN)	DRT1-ID16	
		16 input points (PNP)	DRT1-ID16-1	
		8 output points (NPN)	DRT1-OD08	---
		8 output points (PNP)	DRT1-OD08-1	
		16 output points (NPN)	DRT1-OD16	
		16 output points (PNP)	DRT1-OD16-1	
Remote I/O Terminals with Transistors and 3-tier Terminal Block	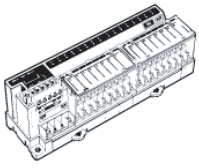	16 input points (NPN)	DRT1-ID16T	Simple wiring (not necessary to tighten multiple wires together and wiring locations are easy to understand) The DRT1-□D16TA(-1) does not need a separate power supply for internal circuits (uses the communications power supply).
		16 input points (PNP)	DRT1-ID16T-1	
		16 input points (NPN)	DRT1-ID16TA	
		16 input points (PNP)	DRT1-ID16TA-1	
		16 output points (NPN)	DRT1-OD16T	
		16 output points (PNP)	DRT1-OD16T-1	
		16 output points (NPN)	DRT1-OD16TA	
		16 output points (PNP)	DRT1-OD16TA-1	
		8 input points+8 output points (NPN)	DRT1-MD16T	
		8 input points+8 output points (PNP)	DRT1-MD16T-1	
		8 input points+8 output points (NPN)	DRT1-MD16TA	
		8 input points+8 output points (PNP)	DRT1-MD16TA-1	
Remote I/O Terminals with Transistors and Connectors	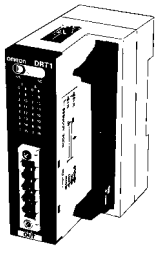	32 input points (NPN)	DRT1-ID32ML	Compact (35 x 60 x 80 mm (W x D x H)) Connects to a Relay Terminal through a MIL cable. Does not need a separate power supply for internal circuits (uses the communications power supply).
		32 input points (PNP)	DRT1-ID32ML-1	
		32 output points (NPN)	DRT1-OD32ML	
		32 output points (PNP)	DRT1-OD32ML-1	
		16 input points+16 output points (NPN)	DRT1-MD32ML	
		16 input points+16 output points (PNP)	DRT1-MD32ML-1	
Remote Adapters	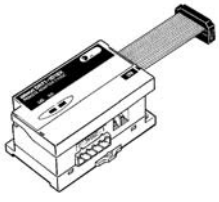	16 input points (NPN)	DRT1-ID16X	Compact (85 x 50 x 40 mm (W x D x H)) Connects to a G70D Relay terminal and can be used for a relay output or a power MOS-FET relay output.
		16 input points (PNP)	DRT1-ID16X-1	
		16 output points (NPN)	DRT1-OD16X	
		16 output points (PNP)	DRT1-OD16X-1	

Name	Appearance	I/O points	Model number	Remarks
Sensor Terminals	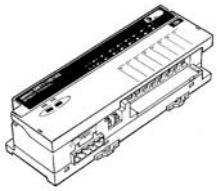	16 input points (NPN)	DRT1-HD16S	Connected to photoelectric and proximity sensors with connectors
		8 input/8 output points (PNP)	DRT1-ND16S	
CQM1 I/O Link Unit	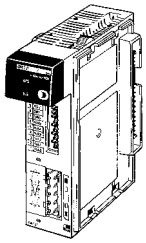	16 internal inputs/ 16 internal outputs (between CQM1 and Master)	CQM1-DRT21	Remote I/O communications between PLCs
CPM2A/CPM1A I/O Link Unit	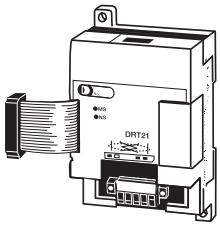	32 internal inputs/ 32 internal outputs (between CPM2A/ CPM1A and Master)	CPM1A-DRT21	Remote I/O communications between PLCs

Note For details on Slaves, refer to the *DeviceNet (CompoBus/D) Slaves Operation Manual* (W347).

Waterproof and Environment-resistant Slaves (Communications Cable: Round Connectors)

Name	Appearance	I/O points	Model number	Remarks
Waterproof Terminals	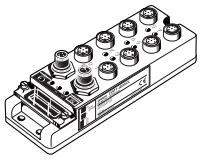	4 input points (NPN)	DRT1-ID04CL	Dust and drip-proof structure for environmental resistance (IP 67) XS2 Series connector system eliminates the need for tools for sensor, valve or other connections.
		4 input points (PNP)	DRT1-ID04CL-1	
		8 input points (NPN)	DRT1-ID08CL	
		8 input points (PNP)	DRT1-ID08CL-1	
		4 output points (NPN)	DRT1-OD04CL	
		4 output points (PNP)	DRT1-OD04CL-1	
		8 output points (NPN)	DRT1-OD08CL	
		8 output points (PNP)	DRT1-OD08CL-1	
Environment-resistant Terminals	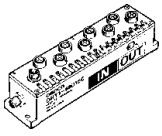	8 input points (NPN)	DRT1-ID08C	Spatter, dust and drip-proof structure for environmental resistance (IP 66) XS2 Series connector system eliminates the need for tools for sensor, valve or other connections.
		8 output points (NPN)	DRT1-OD08C	
		16 input points (NPN)	DRT1-HD16C	
		16 input points (PNP)	DRT1-HD16C-1	
		16 output points (NPN)	DRT1-WD16C	
		16 output points (PNP)	DRT1-WD16C-1	
		8 input points+8 output points (NPN)	DRT1-MD16C	
		8 input points+8 output points (PNP)	DRT1-MD16C-1	
B7AC Interface Terminal		10 input points x 3	DRT1-B7AC	Splits 1 B7AC Unit into 3 branches. XS2 Series connector system eliminates the need for tools. Dust and drip-proof structure for environmental resistance (IP 66)

Special Slaves (Communications Cable: Normal Square Connectors)

Name	Appearance	I/O points	Model number	Remarks
C200H I/O Link Unit	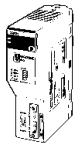	512 inputs max. (32 words) 512 outputs max. (32 words)	C200HW-DRT21	Supports remote I/O and message communications between PLCs. Max. I/O area: 512 input points and 52 output points Any I/O words can be allocated.
RS-232C Unit	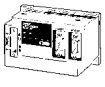	16 inputs (1 word)	DRT1-232C2	Two RS-232C ports mounted Data sent and received by explicit message (151 bytes max.) Executes settings and control through explicit messages. Reflects RS-232C port status in the input.
Programmable Slaves	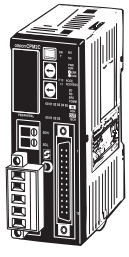	512 inputs max. (32 words) 512 outputs max. (32 words)	CPM2C-S100C-DRT CPM2C-S110C-DRT	Controller that enables communications with CompoBus/S Master. Enables message communications using explicit messages.

DRT2 Series

General-purpose Slaves (Communications Cable: Normal Square Connectors)

Name	Appearance	I/O points	Model number	Remarks
Remote I/O Terminals with Transistors	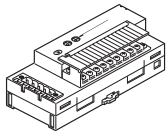	8 input points (NPN)	DRT2-ID08	Terminal block mounted/ removed using screws.
		8 input points (PNP)	DRT2-ID08-1	
		8 output points (NPN)	DRT2-OD08	
		8 output points (PNP)	DRT2-OD08-1	
	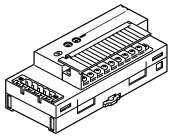	16 input points (NPN)	DRT2-ID16	
		16 input points (PNP)	DRT2-ID16-1	
		16 output points (NPN)	DRT2-OD16	
		16 output points (PNP)	DRT2-OD16-1	
		8 input points/8 output points (NPN)	DRT2-MD16	
		8 input points/8 output points (PNP)	DRT2-MD16-1	
Remote I/O Terminal with Relay Outputs	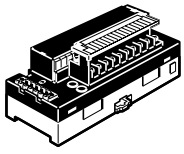	16 output points	DRT2-ROS16	Relay outputs
Remote I/O Terminal Expansion Units with Transistors	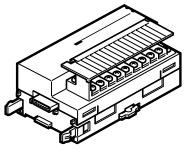	16 input points (NPN)	XWT-ID16	Expansion Unit for increasing inputs or outputs of the Basic Unit.
		16 input points (PNP)	XWT-ID16-1	
		16 output points (NPN)	XWT-OD16	
		16 output points (PNP)	XWT-OD16-1	
		8 input points (NPN)	XWT-ID08	
		8 input points (PNP)	XWT-ID08-1	
		8 output points (NPN)	XWT-OD08	
		8 output points (PNP)	XWT-OD08-1	
Remote I/O Terminals with 3-tier Terminal Blocks and Transistors	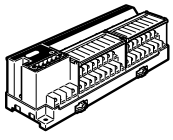	16 input points (NPN)	DRT2-ID16TA	Wiring locations easy to find (wiring to the same terminal not required). Cannot be expanded with an Expansion Unit.
		16 input points (PNP)	DRT2-ID16TA-1	
		16 output points (NPN)	DRT2-OD16TA	
		16 output points (PNP)	DRT2-OD16TA-1	
		8 input points/8 output points (NPN)	DRT2-MD16TA	
		8 input points/8 output points (PNP)	DRT2-MD16TA-1	

Name	Appearance	I/O points	Model number	Remarks
Sensor Connector Terminals with Transistors	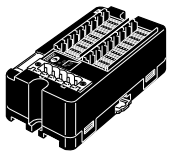	16 input points (NPN)	DRT2-ID16S	Use industry standard sensor connectors.
		16 input points (PNP)	DRT2-ID16S-1	
		8 input points/8 output points (NPN)	DRT2-MD16S	
		8 input points/8 output points (PNP)	DRT2-MD16S-1	
MIL Connector Terminals with Transistors	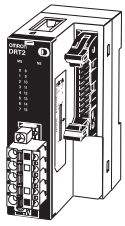	16 input points (NPN)	DRT2-ID16ML	Connects to relay terminal using MIL cable.
		16 input points (PNP)	DRT2-ID16ML-1	
		16 output points (NPN)	DRT2-OD16ML	
		16 output points (PNP)	DRT2-OD16ML-1	
		16 input points (NPN)	DRT2-ID16MLX	A connecting cable (10 cm) is included.
		16 input points (PNP)	DRT2-ID16MXL-1	
		16 output points (NPN)	DRT2-OD16MLX	
		16 output points (PNP)	DRT2-OD16MXL-1	
	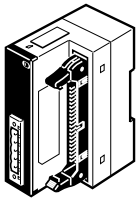	32 input points (NPN)	DRT2-ID32ML	Connects to relay terminal using MIL cable.
		32 input points (PNP)	DRT2-ID32ML-1	
		32 output points (NPN)	DRT2-OD32ML	
		32 output points (PNP)	DRT2-OD32ML-1	
		16 input points/16 output points (NPN)	DRT2-MD32ML	
		16 input points/16 output points (PNP)	DRT2-MD32ML-1	
Board MIL Connector Terminals with Transistors	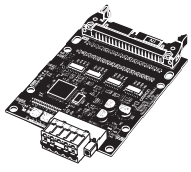	32 input points (NPN)	DRT2-ID32B	MIL connectors mounted parallel to board
		32 input points (PNP)	DRT2-ID32B-1	
		32 output points (NPN)	DRT2-OD32B	
		32 output points (PNP)	DRT2-OD32B-1	
		16 input points/16 output points (NPN)	DRT2-MD32B	
		16 input points/16 output points (PNP)	DRT2-MD32B-1	
	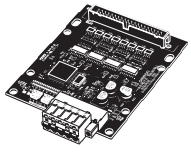	32 input points (NPN)	DRT2-ID32BV	MIL connectors mounted perpendicular to board
		32 input points (PNP)	DRT2-ID32BV-1	
		32 output points (NPN)	DRT2-OD32BV	
		32 output points (PNP)	DRT2-OD32BV-1	
		16 input points/16 output points (NPN)	DRT2-MD32BV	
		16 input points/16 output points (PNP)	DRT2-MD32BV-1	

Name	Appearance	I/O points	Model number	Remarks
Screw-less Clamp Terminal with Transistors	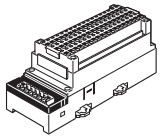	16 input points (NPN)	DRT2-ID16SL	Without detection function
		16 input points (PNP)	DRT2-ID16SL-1	
		16 output points (NPN)	DRT2-OD16SL	
		16 output points (PNP)	DRT2-OD16SL-1	
		16 input points (NPN)	DRT2-ID16SLH	With detection function
		16 input points (PNP)	DRT2-ID16SLH-1	
		16 output points (NPN)	DRT2-OD16SLH	
		16 output points (PNP)	DRT2-OD16SLH-1	
	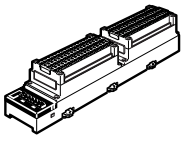	32 input points (NPN)	DRT2-ID32SL	Without detection function
		32 input points (PNP)	DRT2-ID32SL-1	
		32 output points (NPN)	DRT2-OD32SL	
		32 output points (PNP)	DRT2-OD32SL-1	
		16 input points/16 output points (NPN)	DRT2-MD32SL	
		16 input points/16 output points (PNP)	DRT2-MD32SL-1	
		32 input points (NPN)	DRT2-ID32SLH	With detection function
		32 input points (PNP)	DRT2-ID32SLH-1	
		32 output points (NPN)	DRT2-OD32SLH	
		32 output points (PNP)	DRT2-OD32SLH-1	
		16 input points/16 output points (NPN)	DRT2-MD32SLH	
		16 input points/16 output points (PNP)	DRT2-MD32SLH-1	

Environment-resistant Slaves (Communications Cable: Round Waterproof Connectors)

Name	Appearance	I/O points	Model number	Remarks
Environment-resistive Terminals	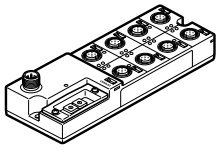	8 input points (NPN)	DRT2-ID08C	Waterproof, oil-proof, and spatter-proof construction (IP67). Equipped with detection functions.
		8 input points (PNP)	DRT2-ID08C-1	
		16 input points (NPN)	DRT2-HD16C	
		16 input points (PNP)	DRT2-HD16C-1	
	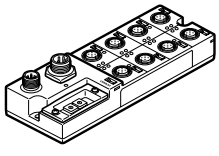	8 output points (NPN)	DRT2-OD08C	
		8 output points (PNP)	DRT2-OD08C-1	

Name	Appearance	I/O points	Model number	Remarks
Environment-resistive Terminals, Standard Models	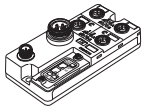	4 input points (NPN)	DRT2-ID04CL	Waterproof, oil-proof, and spatter-proof construction (IP67). Not equipped with detection functions.
		4 input points (PNP)	DRT2-ID04CL-1	
		4 output points (NPN)	DRT2-OD04CL	
		4 output points (PNP)	DRT2-OD04CL-1	
	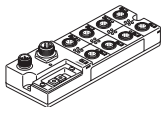	8 input points (NPN)	DRT2-ID08CL	
		8 input points (PNP)	DRT2-ID08CL-1	
		16 input points (NPN)	DRT2-HD16CL	
		16 input points (PNP)	DRT2-HD16CL-1	
		8 output points (NPN)	DRT2-OD08CL	
		8 output points (PNP)	DRT2-OD08CL-1	
		16 output points (NPN)	DRT2-WD16CL	
		16 output points (PNP)	DRT2-WD16CL-1	
		8 input points/8 output points (NPN)	DRT2-MD16CL	
		8 input points/8 output points (PNP)	DRT2-MD16CL-1	

Analog Slaves (Communications Cable: Normal Square Connectors)

Name	Appearance	I/O points	Model number	Remarks
Analog Terminals	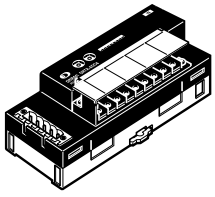	4 input points (0 to 5 V, 1 to 5 V, 0 to 10 V, −10 to 10 V, 0 to 20 mA, 4 to 20 mA)	DRT2-AD04	Terminal block mounted/removed using screws. The DRT2-AD04H is a High-resolute Terminal (1/30,000 FS).
	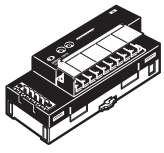	4 input points (0 to 5 V, 1 to 5 V, 0 to 10 V, 0 to 20 mA, 4 to 20 mA)	DRT2-AD04H	
	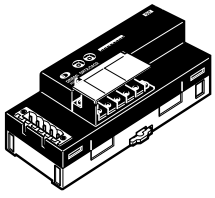	2 output points (0 to 5 V, 1 to 5 V, 0 to 10 V, −10 to 10 V, 0 to 20 mA, 4 to 20 mA)	DRT2-DA02	
Temperature Input Terminals	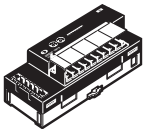	4 input points (Switchable between R, S, K1, K2, J1, J1, T, E, B, N, L1, L2, U, W, and PL2.)	DRT2-TS04T	Thermocouple input
	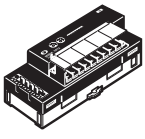	4 input points (Switchable between PT, JPT, PT2, and JPT2.)	DRT2-TS04P	Platinum resistance thermometer input

MULTIPLE I/O TERMINAL Units

Unit		I/O points	Words allocated in PC memory		I/O connections	Unit power supply voltage	Installation	Model number	Remarks
			Input	Output					
Communications Unit		None	Two status words	0 words	None	24 VDC (supplied from outside)	DIN track	DRT1-COM	---
Basic I/O Units	Transistor Input Units	16 input points	1 word	0 words	M3 terminal block			GT1-ID16	NPN
								GT1-ID16-1	PNP
		16 input points	1 word	0 words	Connector (made by MOLEX)			GT1-ID16MX	NPN
								GT1-ID16MX-1	PNP
		16 input points	1 word	0 words	Connector (made by FUJITSU)			GT1-ID16ML	NPN
								GT1-ID16ML-1	PNP
		16 input points	1 word	0 words	Connector (D-sub, 25 pin)			GT1-ID16DS	NPN
								GT1-ID16DS-1	PNP
		32 input points	2 words	0 words	High-density connector (made by FUJITSU)			GT1-ID32ML	NPN
								GT1-ID32ML-1	PNP
	Transistor Output Units	16 output points	0 words	1 word	M3 terminal block			GT1-OD16	NPN
								GT1-OD16-1	PNP
		16 output points	0 words	1 word	Connector (made by MOLEX)			GT1-OD16MX	NPN
								GT1-OD16MX-1	PNP
		16 output points	0 words	1 word	Connector (made by FUJITSU)			GT1-OD16ML	NPN
								GT1-OD16ML-1	PNP
		16 output points	0 words	1 word	Connector (D-sub, 25 pin)			GT1-OD16DS	NPN
								GT1-OD16DS-1	PNP
		32 output points	0 words	2 words	High-density connector (made by FUJITSU)			GT1-OD32ML	NPN
								GT1-OD32ML-1	PNP
	Relay Output Units	16 output points	0 words	1 word	M3 terminal block			GT1-ROS16	---
		8 output points	0 words	1 word				GT1-ROP08	---

Unit		I/O points	Words allocated in PC memory		I/O connections	Unit power supply voltage	Installation	Model number	Remarks
			Input	Output					
Special I/O Units (See note.)	Analog Input Units	4 inputs	4 words	0 words	M3 terminal block	24 VDC (supplied from outside)	DIN track	GT1-AD04	Inputs: 4 to 20 mA, 0 to 20 mA, 0 to 5 V, 1 to 5 V, 0 to 10 V, –10 to 10 V
		8 inputs	8 words	0 words	Connector (made by MOLEX)			GT1-AD08MX	
	Analog Output Units	4 outputs	0 words	4 words	M3 terminal block			GT1-DA04	Outputs: 4 to 20 mA 0 to 5 V, 1 to 5 V, 0 to 10 V, –10 to 10 V
		4 outputs	0 words	4 words	Connector (made by MOLEX)			GT1-DA04MX	Outputs: 0 to 5 V, 1 to 5 V, 0 to 10 V, –10 to 10 V
	Temperature Input Unit	4 inputs	4 or 8 words (varies with data format)	0 words	M3 terminal block			GT1-TS04T	Sensor types: R, S, K, J, T, B, L
		4 inputs		0 words	M3 terminal block			GT1-TS04P	Sensor types: Pt100, JPt100
	Counter Unit	1 input	3 words	3 words	M3 terminal block			GT1-CT01	1 external input 2 external outputs

Note The front-panel indicators and other parts of Analog Input Units, Analog Output Units, and Counter Units differ from those of other I/O Units. These Units belong to a group called Special I/O Units.

One I/O Unit Connecting Cable (cable length 40 mm) is included with each I/O Unit. One end connector is attached to the Communications Unit.

I/O Unit Connecting Cables with a cable lengths of 0.1, 0.3, 0.4, 0.6, and 1 m (GCN1-010/030/040/060/100) are sold separately (see below).

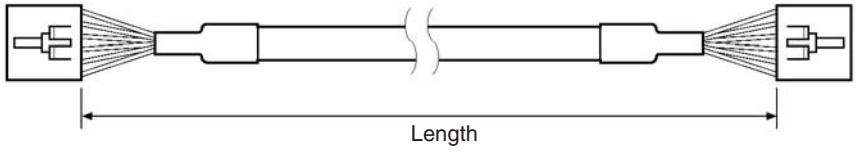

Note For details on MULTIPLE I/O TERMINAL Units, refer to the *DeviceNet MULTIPLE I/O TERMINAL Operation Manual* (W348).

1-1-5 DeviceNet Configurator

Use version 2 of the DeviceNet Configurator for the CS1W-DRM21(-V1)/ CJ1W-DRM21 DeviceNet Unit. Earlier versions of the DeviceNet Configurator do not support the CS1W-DRM21 DeviceNet Unit.

Product name	Model	Components	Network connection to computer	Applicable computer	OS
DeviceNet Configurator (Ver. 2)	WS02-CFDC1-E	Installation disk (CD-ROM)	Any of the following: • Serial connection • PCI Board • PCMCIA Card (See the table below.)	IBM PC/AT or compatible	Windows 95, 98, Me, NT4.0, 2000, or XP

Note The following Boards and Cards can be used.

Model	Components	Applicable computer	OS
3G8F7-DRM21	Dedicated PCI Board (DeviceNet Configurator is not included.)	IBM PC/AT or compatible	Windows 95, 98, NT4.0, 2000, or XP
3G8E2-DRM21-V1	Dedicated PCMCIA Card with DeviceNet Configurator (Ver. 2)		Windows 98, Me, 2000, or XP

Note Use Configurator version 2.10 or higher for the CJ1W-DRM21.

1-2 DeviceNet Unit Features

The following are features of the CS-series and CJ-series DeviceNet Units (CS1W-DRM21(-V1) and CJ1W-DRM21).

Multi-vendor Network

Devices made by other companies (masters or slaves) can be connected to DeviceNet because it conforms to open field network specifications. By using a combination of valves, sensors, and other DeviceNet products, the network can be adapted to various field-level applications.

Simultaneous Remote I/O Communications and Messaging Services

Remote I/O communications that constantly transfer I/O between a DeviceNet Unit and slaves as well as message communications where the DeviceNet Unit sends and receives data as needed can both be executed simultaneously. When a DeviceNet network is constructed, this feature ensures the network will be able to handle applications that require the free flow back and forth of bit data and message data. FINS commands can be executed along with DeviceNet explicit messages in message communications.

Remote I/O Communications

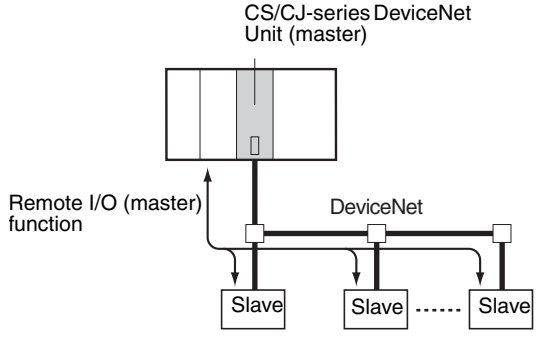

Note Refer to *SECTION 4 Remote I/O Master Communications* for details on remote I/O communications.

Explicit Message Communications

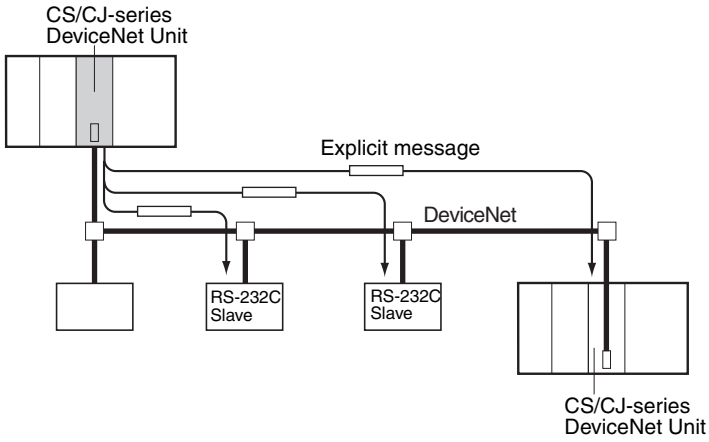

Note Refer to *6-4 Sending Explicit Messages* for details on remote I/O communications.

FINS Message Communications

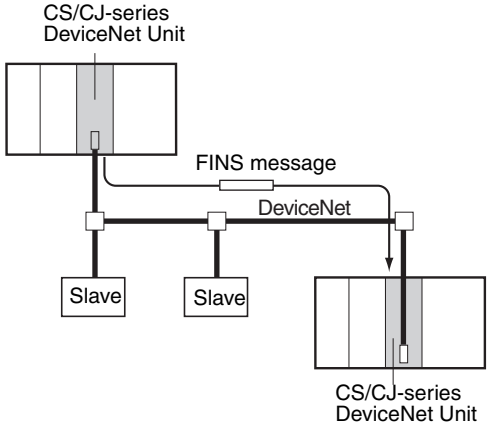

Note Refer to *6-3 Using FINS Message Communications* for details on FINS communications.

User-set allocations without the Configurator

With CS/CJ-series DeviceNet Units, remote I/O communications can be allocated in any area without the Configurator simply by using DM Area settings. If the Configurator is used, it allows you to change the node address order for more flexible I/O allocations. This feature ensures the proper I/O allocations for any application and it makes effective use of PLC memory by simplifying programming.

Note Refer to *4-4 User-set Allocations* for details.

Slave Functions

CS/CJ-series DeviceNet Units can be used as both masters and slaves, and master and slave communications can be executed either separately or simul-

taneously. A Unit that is used as a slave supports fixed and user-set allocations. The maximum I/O for the slave function is 100 words.

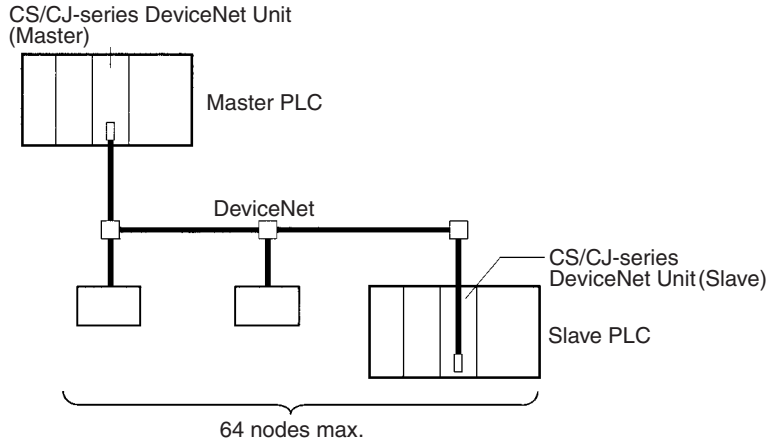

Note Refer to *SECTION 5 Remote I/O Slave Communications* for details.

Configurator Connection through a Serial Line

The Configurator can also be connected either as a DeviceNet node or to a serial port on a CPU Unit or a Serial Communication Unit/Board.

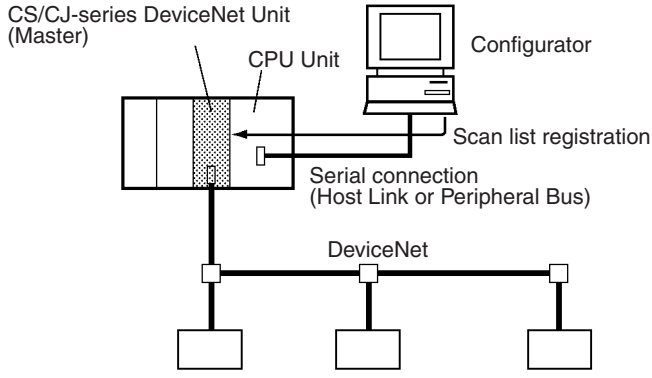

CX-Programmer Programming and Monitoring of DeviceNet Slave PLCs (Ver. 2.1 or higher)

CX-Programmer Ver. 2.1 connected to a serial communications port on a DeviceNet PLC can be used to remotely program and monitor other DeviceNet PLCs (i.e., PLCs with a CS/CJ-series DeviceNet Unit or a Programmable Slave).

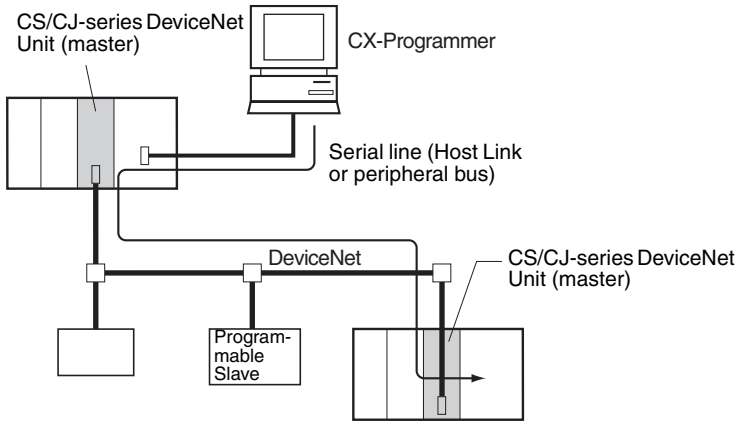

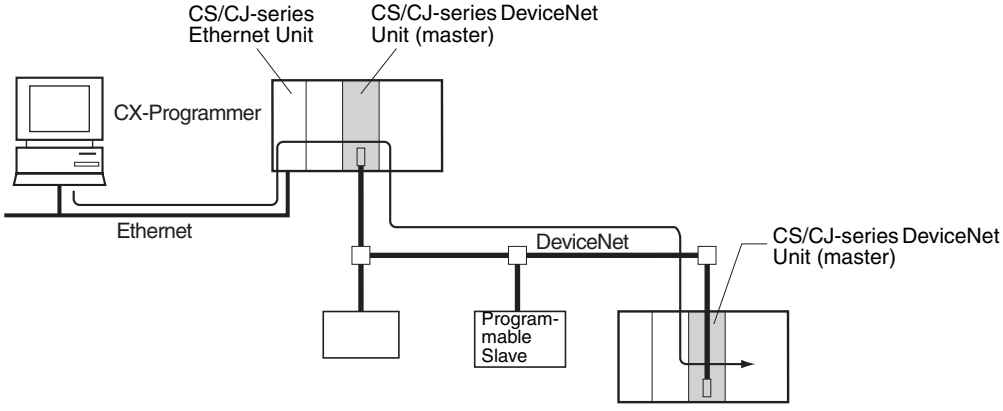

Note Refer to *7-1 Connecting to the CX-Programmer via the DeviceNet* for details.

Inter-network Connections

FINS messages can be sent back and forth between DeviceNet and other networks (e.g., Controller Link, SYSMAC LINK, and Ethernet). This feature enables seamless message communications between all types of networks, including DeviceNet.

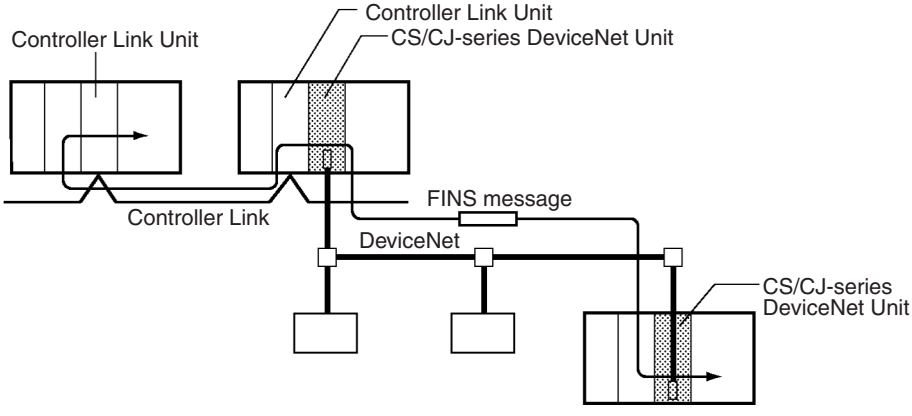

Note Refer to *6-3 Using FINS Message Communications* for details.

Multiple PLCs in a Single Network

Multiple DeviceNet Units can be connected in a single network for message communications between PLCs as well as for remote I/O communications between PLCs and slaves in multiple groups. This feature allows a DeviceNet to be used as a common bus that can integrate all types of control with less wiring.

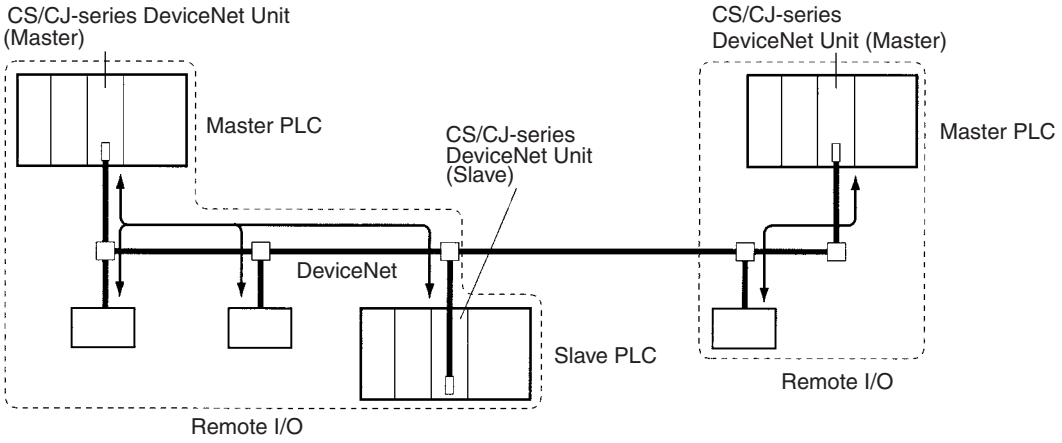

Note Refer to *4-1 Master Remote I/O Communications* for details.

Multiple DeviceNet Units on a Single PLC

Up to 16 CS/CJ-series DeviceNet Units can be mounted to a single PLC. This feature enables greater DeviceNet remote I/O control capacity and ensures that DeviceNet can easily handle line expansion as well as other applications.

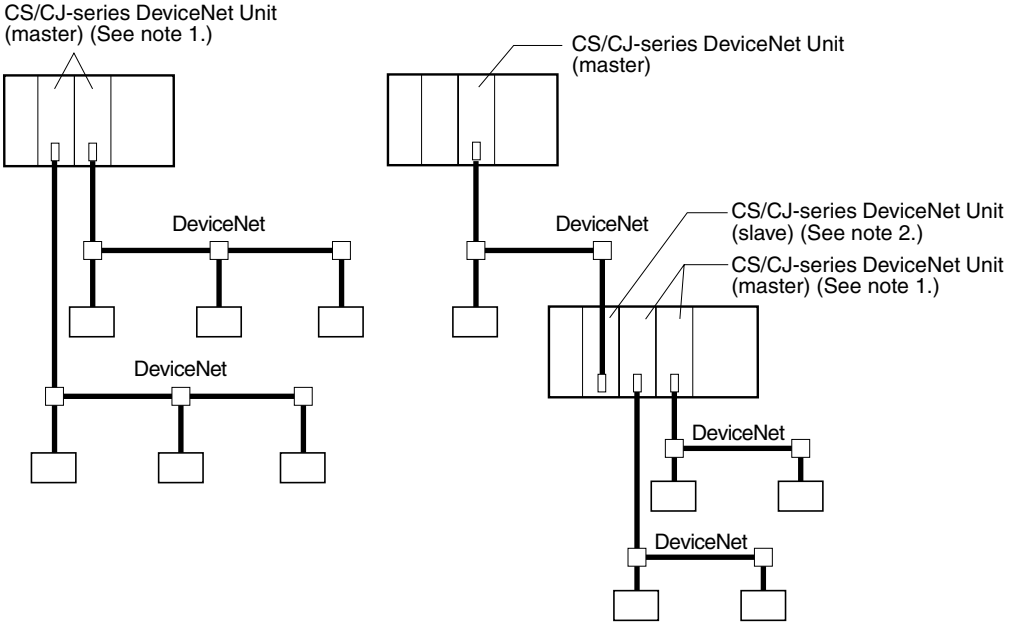

Note
1. Multiple Units can be mounted without the Configurator.
2. DeviceNet Units set as both slaves and/or masters can be mounted at the same time.
3. Refer to *4-1 Master Remote I/O Communications* for details.

DeviceNet Unit Setup Files (Memory Card Backup)

Setup data (e.g., scan lists) in a DeviceNet Unit can be written as a file to the Memory Card mounted in a CPU Unit. This feature greatly simplifies DeviceNet Unit replacement. A DeviceNet Unit device parameter file (same as data setup file) that is prepared offline using the Configurator can be saved on a Memory Card, and setup data from the Memory Card can be downloaded to a DeviceNet Unit. (See *Appendix D Memory Card Backup Function* for more details.)

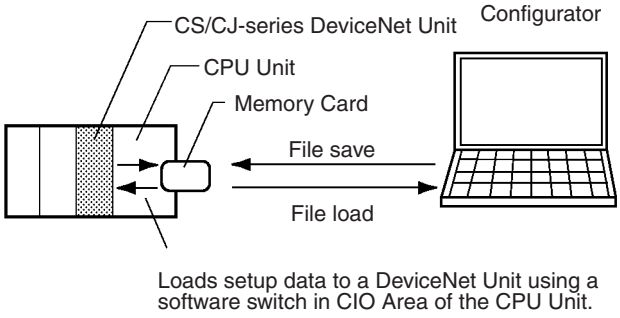

Note Refer to *7-2 Memory Card Backup Functions* for details.

System Backup (Simple Backup)

The CPU Unit's simple backup function enables backup data for the entire PLC, including DeviceNet Units, the CPU Unit, and Serial Communications Units/Boards to be saved on or downloaded from a Memory Card.

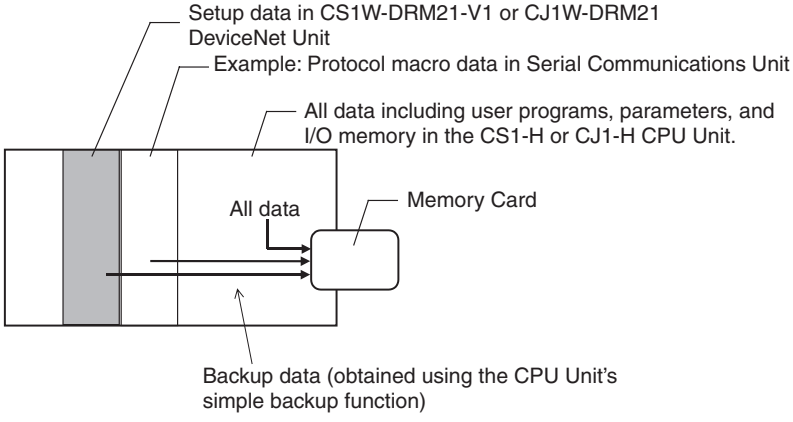

The simple backup function is supported only when using a combination of a CS1-H CPU Unit with a CS1W-DRM21-V1 DeviceNet Unit, or a CJ1-H CPU Unit with a CJ1W-DRM21 DeviceNet Unit.

Note Refer to *7-3 Simple Backup Function* for details.

Various Connection Methods

Normal multi-drop, T-branch multi-drop (with up to three branches), and daisy-chain line connections are available. These methods can be combined to construct a flexible system that suits the floor layout.

Maximum Network Length of 500 m

A network can connect up to 63 Slaves and can handle remote I/O communications of up to 2,000 byes (16,000 points without the Configurator) per DeviceNet Unit. A maximum network length of 500 m is possible with a baud rate of125 Kbps using thick cable.

High-speed Communications

High-speed communications are possible at up to 500 Kbps for a trunk line length of 100 m.

Compatibility with Slow Slaves

The communications cycle time can be set even without the Configurator so slaves with slow response times can be used.

A Wide Variety of Slaves

A wide variety of I/O devices, like Remote I/O Terminals, Environment-resistant Terminals, Remote Adapters, Sensor Terminals, Temperature Input Terminals, CQM1 I/O Link Units, Analog I/O Terminals, C200H I/O Link Units, RS-232C Units, MULTIPLE I/O TERMINALs, Temperature Adjusters, Inverters, and Intelligent Plugs can be used as slaves.

1-3 Specifications

1-3-1 DeviceNet Unit

Model

Applicable PLC	Unit classification	Types of communications	Model number
CS Series	CPU Bus Unit	• Remote I/O communications master (fixed or user-set allocations) • Remote I/O communications slave (fixed or user-set allocations) • Message communications	CS1W-DRM21(-V1)
CJ Series			CJ1W-DRM21

General Specifications

General specifications of the CS/CJ-series DeviceNet Unit conform to the general specifications for the SYSMAC CS/CJ-series CPU Units.

Functional and Performance Specifications

Item				Specification	
DeviceNet Unit model				CS1W-DRM21(-V1)	CJ1W-DRM21
Applicable PLC				CS Series	CJ Series
Unit classification				CPU Bus Unit	
Applicable unit numbers				0 to F	
Mounting position				CPU Rack, CS Expansion Rack (Cannot be mounted to a C200H Expansion I/O Rack or SYSMAC BUS Slave Rack.)	CPU Rack or Expansion Rack
No. of Masters that can be mounted	Fixed allocations			3 Units max. (Unique words must be allocated using the Allocated CIO Area Words Software Switches.)	
	User-set allocations		By allocated DM Area words	16 Units max. (Unique words must be allocated using the user setup tables in the allocated DM Area words.)	
			By Configurator	16 Units max. (Unique words must be allocated using the Configurator.)	
No. of Slaves that can be mounted	Fixed allocations			3 Units max. (Unique words must be allocated using the Allocated CIO Area Words Software Switches)	
	User-set allocations		By allocated DM Area words	16 Units max. (Unique words must be allocated using the user setup tables in the allocated DM Area words.)	
			By Configurator	16 Units max. (Unique words must be allocated using the Configurator.)	
No. of Units that can be connected per network				64 Units max.	
Words allocated in the CPU Unit	DeviceNet remote I/O communications	When used as a Master	Fixed allocations	Fixed words in the CS/CJ-series DeviceNet Area in the CIO Area (any of three settings).	
			User-set allocations	Any I/O memory (Set using the allocated DM Area words or Configurator.)	
		When used as a Slave	Fixed allocations	Fixed words in the CS/CJ-series DeviceNet Area in the CIO Area (one of three settings).	
			User-set allocations	Any I/O memory words (Set in allocated DM Area words or Configurator.)	
	CIO Area words allocated for the CPU Bus Unit			25 words/Unit (allocation for one Unit)	
				CPU Unit to DeviceNet Unit: 9 words for the software switches, 6 words for the status area, 8 words for the registered slaves and normal slaves tables	
	DM Area words allocated for the CPU Bus Unit			100 words/Unit (allocation for one Unit)	
				Scan List User Setup Table, Slave User Setup Table, Master I/O Allocation Reference Table, Slave I/O Allocation Reference Table, Detailed Slave Status Table, etc. CPU Unit to DeviceNet Unit: Table for communications cycle time settings	
	Other I/O memory			Set the allocation size table for all slaves in any area when remote I/O communications is set to user-set allocations from the setting in the allocated DM Area words.	

Item			Specifications					
Supported connections (communications)			• Remote I/O communications (master and slave): Master/slave connection (poll, bit-strobe, COS, cyclic) • Explicit message and FINS message communications: Explicit connection All conform to DeviceNet communications standards.					
Remote I/O master communications	Slave allocation method	Fixed allocations	Select one of the following fixed allocation areas using the Fixed Allocated Area Switches 1, 2, and 3 in the software switches in the allocated CIO Area words.					
			Allocated words (CIO Area)	I/O	Size	Fixed Allocation Area Setting 1	Fixed Allocation Area Setting 2	Fixed Allocation Area Setting 3
				Output (OUT) area	64 words	3200 to 3263	3400 to 3463	3600 to 3663
				Input (IN) area	64 words	3300 to 3363	3500 to 3563	3700 to 3763
				Select one of the above areas using the software switches. All are fixed at 1 word per node address. The default setting is Fixed Allocation Area Setting 1.				
		User-set allocations	By allocated DM Area words	Set the areas and the first words for the OUT 1 and IN 1 blocks in the Scan List Setup Table in the allocated DM Area words. Set the allocation size for each slave using the Allocation Size Setup Table (any words). Allocations must be in the order of node addresses.				
				Allocated words	The input and output areas can be the following sizes starting from any word in any of the following areas: CIO Area, WR Area, HR Area, DM, Area, or EM Area.			
					Output (OUT) area	500 words max. × 1 block		
					Input (IN) area	500 words max. × 1 block		
			By Configurator	Set the areas for the OUT 1/2 and IN 1/2 blocks, the first words, and the allocation sizes for all slaves using the Configurator. Blocks can be set for nodes in any order.				
				Allocated words	The input and output areas can be the following sizes starting from any word in any of the following areas: CIO Area, WR Area, HR Area, DM, Area, or EM Area.			
					Output (OUT) area	500 words max. × 2 blocks		
					Input (IN) area	500 words max. × 2 blocks		

Item				Specifications					
Remote I/O master	Max. No. of Slaves connected per DeviceNet Unit	Fixed allocations		63 nodes					
		User-set allocations	By allocated DM Area words						
			By Configurator						
	Max. No. of I/O points per DeviceNet Unit	Fixed allocations		2,048 pts (64 input words, 64 output words)					
		User-set allocations	By allocated DM Area words	16,000 pts (500 input words x 1 block, 500 output words x 1 block)					
			By Configurator	32,000 pts (500 input words x 2 blocks, 500 output words x 2 blocks)					
	Max. No. of I/O per Slave controllable by a DeviceNet Unit	Fixed allocations		2,048 pts (64 input words, 64 output words)					
		User-set allocations	By allocated DM Area words	3,200 pts (100 input words, 100 output words)					
			By Configurator	3,200 pts (100 input words, 100 output words)					
Remote I/O slave	Allocation method	Fixed allocations		Select one of the following fixed allocation areas using the Slave Fixed Allocated Area Switches 1, 2, and 3 in the software switches in the allocated CIO Area words.					
			Allocated words (CIO Area)	I/O	Size	Fixed Allocation Area Setting 1	Fixed Allocation Area Setting 2	Fixed Allocation Area Setting 3	
				Output (OUT) area to the slave from the master	1 word	3370	3570	3770	
				Input (OUT) area to the master from the slave	1 word	3270	3470	3670	
			Note Select one of the preceding areas using the software switches. All are fixed at 1 word per node address. The default setting is Fixed Allocation Area Setting 1.						
		User-set allocations	By allocated DM Area words	Set the areas, the first words, and slave allocation size for the OUT 1 and IN 1 blocks (total of 2 blocks) using the Slave User Allocation Setup Table in the allocated DM Area words.					
				Allocated words	The input and output areas can be the following sizes starting from any word in any of the following areas: CIO Area, WR Area, HR Area, DM, Area, or EM Area.				
					Output (OUT) area from this slave				100 words
					Input (IN) area to this slave				100 words

Item				Specifications		
Remote I/O slave	Allocation method	User-set allocations	By Configurator	Set the areas for the OUT 1/2 and IN 1/2 blocks, the first words, and the slave allocation sizes using the Configurator.		
				Allocated words	The input and output areas can be the following sizes starting from any word in any of the following areas: CIO Area, WR Area, HR Area, DM, Area, or EM Area.	
					Output (OUT) area from this slave	100 words
					Input (IN) area to this slave	100 words
	Max. No. of I/O points per DeviceNet Unit slave	Fixed allocations		32 points (1 input word, 1 output word)		
		User-set allocations	By allocated DM Area words	3,200 pts (100 input words, 100 output words)		
			By Configurator	4,800 pts (100 input words x 2, 100 output words x 1)		
Default settings			• Scan list: Not supported • Master communications: Supported • Slave communications: Disabled • Remote I/O communications: Start • Master fixed allocations: Fixed Allocation Area Setting 1 • Slave fixed allocations: Fixed Allocation Area Setting 1			
Data stored in non-volatile memory (EEPROM) in the DeviceNet Unit			Saves the following data settings (same as the backup file on the Memory Card). • Master scan list • Slave scan list • Message monitoring timer list (monitoring time for explicit message responses) • Communications time settings • Master/Slave enabled			
Applicable connections			• The DeviceNet Unit automatically selects the applicable connection. • The user can also specify poll, bit-strobe, COS (change of state) or cyclic for the applicable connection of each slave using the Configurator. Up to two types of connections can be set for each Slave (although COS and cyclic cannot be specified simultaneously).			
Communications cycle time			Uses values calculated using the following equations to derive default value. Example: 16 Input Slaves (16 points each), 16 Output Slaves (16 points each), and a baud rate of 500 Kbps: 9.3 ms The user can set a value within a range from 2 to 500 ms. However, the calculated value is only enabled when the calculated value from the conditions equation is greater than the setting. **Note** Uses the default value calculated using 1 input word and 1 output word even for missing nodes when the scan list is disabled.			

Item			Specifications		
Message communications	Max. No. of nodes for message communications per DeviceNet Unit		FINS message communications (Node address 0 cannot be used in FINS communications.)	62 nodes	**Note** FINS message communications using SEND/RECV are not supported on PCs to which a C200H DeviceNet Master Unit or a CVM1/CV DeviceNet Master Unit is mounted. Explicit message are supported however.
			Send explicit messages	63 nodes	
	Execution commands		FINS commands to send/receive data	SEND/RECV instructions	
			Any FINS commands	CMND instruction	
	Sending and receiving FINS commands connected through a serial line		Executes FINS commands from a host computer to a PC (to which a CS/CJ-series DeviceNet Unit is mounted) on DeviceNet through Host Link connections. A PLC can also send unsolicited FINS commands over DeviceNet to a host computer connected through Host Link.		
	Inter–network communications	Same type of network	Allows transmission across the same type of networks between DeviceNet networks when multiple Units are mounted (can cross up to three levels).		
		Different type of network	Allows transmission across different types of networks between DeviceNet and other networks (e.g., Controller Link, SYSMAC LINK and Ethernet) (can cross up to three levels).		
Other functions	Remote programming/monitoring functions		A CX-Programmer connected to the serial communications port of a PLC to which a CS/CJ-series DeviceNet Unit is mounted can remotely program and monitor DeviceNet slave PLCs with a CS/CJ-series DeviceNet Unit mounted. Either the peripheral port or built-in RS-232C port can be used with the Host Link or peripheral bus protocol. (Scheduled for CX-Programmer Ver. 2.1 or higher) **Note** 1. Serial ports on a Serial Communications Board/Unit can be used in addition to the ports on the CPU Unit. 2. Inter-network communications across up to 3 levels is possible (even over different types of network). 3. This is also possible from a CX-Programmer on network.		
	Operation from the Configurator connected through a serial line		Allows all online monitoring and setup functions to be performed on a master PLC on the DeviceNet network from the Configurator connected through a serial line (scan list registration, communications parameter settings, etc.).		
	Memory Card backup function		Allows DeviceNet Unit data settings (scan list, communication cycle time settings, etc.) to be backed up as a file to a Memory Card in the CPU Unit. The data settings can also be restored into the DeviceNet Unit from the Memory Card in the CPU Unit. Setting data can be restored into a DeviceNet Unit simply by carrying the Memory Card to the site if the device parameter file prepared from the Configurator is saved to Memory Card from a PLC.		
	Simple backup function		Enables all setup data in the DeviceNet Unit's non-volatile memory (EEPROM), as well as all data in the CPU Unit, to be automatically backed up to, restored from, or compared with a file in a Memory Card mounted in the CPU Unit. **Note** The simple backup function is supported only when using a combination of a CS1-H CPU Unit with a CS1W-DRM21-V1 DeviceNet Unit, or a CJ1-H CPU Unit with a CJ1W-DRM21 DeviceNet Unit.		

Item		Specifications
Other functions	Error history in the DeviceNet Unit	Supported. (The history can be accessed up by the Configurator or using a FINS command.)
	Communications cycle time setting	Supported (in the allocated DM Area words or from the Configurator).
	Message monitoring timer	Sets the response monitoring time (explicit connection opening interval) in the DeviceNet Unit for explicit message communications. Settings can be made separately for all targeted devices using the Configurator.
	COS/cyclic heartbeat timer setting	Sets the minimum SEND interval in COS or cyclic connections for all targeted devices. The setting is made using the Configurator.
	Device data check function	Performs a comparison check on the following device data when slave data registered in the scan list is compared with actual slave data. The Configurator can be used to set this function for all targeted Slaves. Vendor, device type and product code
Configurator connection method		1) Serial connection (peripheral bus or Host Link) 2) Direct DeviceNet connection through a dedicated Board/Card The online functions available are the same for both 1) and 2).
Setting section		Rotary switches: Unit No. (hexadecimal x 1), node address (decimal x 2) Front panel DIP switch: Baud rate, stop or continue communications when an error occurs
Display section		Two LED indicators (2 colors): Display Unit and network status. Two-digit 7-segment display: Displays the DeviceNet Unit node address, error code, and node address where an error occurred. 2 dot LED indicators: Display whether the registration scan list is enabled or not.
Front connector		One communications connector (communications data: CAN H and CAN L, communications power supply: V+, V–, shielded) Use the XW4B-05C1-H1-D connector provided to connect the communications cable. **Note** Use the XW4B-05C4-T-D connector sold separately for multi-drop connections.
Communications power supply voltage		11 to 25 VDC (supplied from the communications connector)
Influence on CPU Unit cycle time		0.7 ms+0.001 x the number of words allocated
Current consumption		**CS1W-DRM21(-V1):** Communications power supply: 30 mA at 24 VDC, (supplied from the communications connector) Internal circuit power supply: 290 mA max. at 5 VDC (supplied from the Power Supply Unit) **CJ1W-DRM21:** Communications power supply: 18 mA at 24 VDC, (supplied from the communications connector) Internal circuit power supply: 290 mA max. at 5 VDC (supplied from the Power Supply Unit)
External dimensions		CS1W-DRM21(-V1): 35 x 130 x 101 mm (W x H x D) CJ1W-DRM21: 31 x 90 x 65 mm (W x H x D)
Weight		CS1W-DRM21: 172 g (including the connector provided) CS1W-DRM21-V1: 169 g (including the connector provided) CJ1W-DRM21: 118 g (including the connector provided)
Standard accessories		One XW4B-05C1-H1-D connector to connect to a node from a T-branch Tap.

1-3-2 Comparison between CS1W-DRM21(-V1) and CJ1W-DRM21

Only the following items are different between the CS1W-DRM21(-V1) and the CJ1W-DRM21. Otherwise, these Units are functionally the same.

Item	CS1W-DRM21(-V1)	CJ1W-DRM21
Consumption current	Communications power supply: 30 mA at 24 VDC	Communications power supply: 18 mA at 24 VDC
External dimensions	35 x 130 x 101 mm (W x H x D)	31 x 90 x 65 mm (W x H x D)
Weight (including connector)	172 g (CS1W-DRM21) 169 g (CS1W-DRM21-V1)	118 g

1-4 Comparison with Previous Models

The following table provides a comparison between the CS1W-DRM21(-V1) DeviceNet Unit and the C200HW-DRM21-V1 DeviceNet Master Unit used in a CS/CJ-series PLC.

Item		C200HW-DRM21-V1	CS1W-DRM21(-V1)/CJ1W-DRM21
Unit classification		C200H Special I/O Unit	CPU Bus Unit
Mounting position		CPU Rack, C200H I/O Expansion Rack, CS-series Expansion Rack	CPU Rack, CS/CJ-series Expansion Rack
No. of Masters that can be mounted	Fixed allocations	1 Master	3 Masters (Select unique words must be allocated using the software switches.) 3 Slaves (Select unique words must be allocated using the software switches.)
	User-set allocations	16 Masters (Configurator required)	16 Masters (even without the Configurator)
Routing table registration		Not necessary	When creating a routing table, registration in a local network table is necessary.
Unit No. that can be set		0 to F	0 to F
Masters on a single network		Multiple Masters, Configurator required	Multiple Masters even without the Configurator
Remote I/O communications	Master	❍	❍
	Slave	X	❍
Message communications		Explicit message send, FINS message communications	Explicit message send, FINS message communications **Note** Can send and receive explicit messages to the PC to which a C200H DeviceNet Master Unit or CVM1/CV DeviceNet Master Unit is mounted. Cannot sent or receive FINS messages.
Registration in the scan list when using only message communications		Required	Not required
Area used to exchange data with the CPU Unit (not including remote I/O allocation)	Allocated CIO Area words	2,000 to 2,009 + (10 x unit number)	1,500 to 1,524 + (25 x unit number)
	Allocated DM Area words	Not used	D30000 to D30099 (100 x unit number)
	Dedicated DM area	D06032 to D06033 + (2 x unit number)	Not used. **Note** With user-set allocations using the allocated DM Area words however, the Allocation Size Setup Table must be allocated to a position in I/O memory.

Item		C200HW-DRM21-V1	CS1W-DRM21(-V1)/CJ1W-DRM21
Remote I/O communications Master	Fixed allocations	C200H DeviceNet words in CIO Area 1,600 points (50 input words, 50 output words)	CS/CJ-series DeviceNet words in CIO Area 2,048 points (64 input words, 64 output words)
		Output area: CIO 0050 to CIO 0099 Input area: CIO 0350 to CIO 0399	Select one of the following using the software switch. Output area: (1) CIO 3200 to CIO 3263 (2) CIO 3400 to CIO 3463 (3) CIO 3600 to CIO 3663 Input area: (1) CIO 3300 to CIO 3363 (2) CIO 3500 to CIO 3563 (3) CIO 3700 to CIO 3763
		Node addresses: 0 to 49, node address order, 1 word/node address	Node addresses: 0 to 63, node address order, 1 word/node address
		• Slaves with 8 points: Require 1 word even though they are allocated the rightmost byte (requires 1 node address) • Slaves with 16 points: Require 1 word (require 1 node address) • Slaves with over 16 points: Require multiple words (require multiple node addresses)	
	User-set allocations	Set by the Configurator.	Set from allocated DM Area words (Master User Allocation Setup Table) or the Configurator.
		When using the message communications function: 1,600 pts max. (800 input words, 800 output words) When not using the message communications function: 4,800 pts max. (2,400 input words, 2,400 output words)	When set from allocated DM Area words: 16,000 pts max. (8,000 input words, 8,000 output words) When set from the Configurator: 32,000 pts max. (16,000 input words, 16,000 output words)
		The following areas can be set: CIO: 0000 to 0235, 0300 to 0511 CIO: 1000 to 1063 HR: HR000 to HR099 DM: D00000 to D05999	The following areas can be set: CIO: 0000 to 6143 WR: W000 to W511 HR: HR000 to HR511 words DM: D00000 to D32767 EM: E00000 to E32767 (Banks 0 to C supported)
		OUT 1, OUT 2, IN 1, and IN 2, for a total of 4 blocks can be set at any size (total for 1 to 4 blocks) at any position in the allocation areas given above. Any node addresses can be set within a block.	Any position in the allocation areas given above. Using allocated DM Area words: Total of two block, OUT 1 and IN 1. Using the Configurator: A total of 3 blocks, OUT 1, IN 1, and IN 2
		With a total of 4 blocks and a maximum of 100 words per block, the maximum number of words is 100 using message communications and 300 without using the message communications.	500 words max. per block Using allocated DM Area words: 1,000 words total for 2 blocks Using the Configurator: 2,000 words total for 4 blocks
		Maximum of 32 input words, 32 output words per slave.	Using 2 connections: Maximum of 200 input words, 100 output words per slave. Using 1 connection: Maximum of 100 input words, 100 output words per slave.
		There are the following restrictions. • The bytes 7 to 15 cannot be used for start bytes for slaves with more than 8 points. • More than one master cannot share a slave. • Slaves with 8 points: Require the leftmost or rightmost byte (does not require 1 word) • Slaves with 16 points: Require 1 word • Slave with over 16 points: Require multiple words (the last byte will be the rightmost byte with an odd number of bytes)	

Item		C200HW-DRM21-V1	CS1W-DRM21(-V1)/CJ1W-DRM21
Remote I/O communications Master	Max. No. of slaves connected	With no Configurator (fixed allocations): 50 nodes	63 nodes for fixed or user-set allocations
		With no Configurator (user-set allocations): 63 nodes	
Remote I/O Slave	Fixed allocations	No	DeviceNet words in CIO Area: 32 points (1 input word, 1 output word)
			Select one of the following: Input area to the Slave: (1) CIO 3370, (2) CIO 3570, (3) CIO 3770 Output area from the Slave: (1) CIO 3270, (2) CIO 3470, (3) CIO 3670
	User-set allocations	No	Set in the allocated DM Area words or the Configurator.
			The following areas can be set: CIO: CIO 0000 to CIO 6143 WR: W000 to W511 HR: HR000 to HR511 DM: D00000 to D32767 EM: E00000 to E32767 (Banks 0 to C supported)
			Using the allocated DM Area words: Can create OUT 1 and IN 1 for a total of 2 blocks. Using the Configurator: Can create OUT 1, IN 1, and IN 2 for a total of 3 blocks.
			100 words max. per block Using the allocated DM Area words: 200 words total for 2 blocks Using the Configurator: 300 words total for 3 blocks
Message communications	Execute commands	Sending/receiving data: No Any FINS command: IOWR instruction	Sending/receiving data: SEND/RECV instructions Any FINS command: CMND instruction
	Max. No. of nodes for message communications	8 nodes	63 nodes
	Gateway function from serial communications	Not supported	Allows the CX-Programmer connected by a serial line to remotely control and monitor a PLC on the DeviceNet (scheduled for Ver. 2.1).
	Inter-network function	Not supported	Supported Allows inter-network communications between DeviceNet and networks like Controller Link and Ethernet (3 levels max.).
Configuration connection method	Serial connection	Not supported	Supported (Peripheral Bus or Host Link connection to a CPU Unit or a Serial Communication Board/Unit)
	Direct connection to DeviceNet	Supported	Supported
I/O communications at startup		Specifies I/O communications start/stop after each slave on the scan list starts (nodes that perform explicit message communications must also be registered in the scan list).	Sets Master start/stop (using a software switch or the Configurator). Performs I/O communications only with slaves registered in the scan list. (Explicit message nodes do not have to be registered in the scan list.)

Item		C200HW-DRM21-V1	CS1W-DRM21(-V1)/CJ1W-DRM21
Starting and stopping remote communications during I/O communications		Starts or stops remote I/O communications using the Configurator or the software switch from a Programming Device.	
Remote I/O communications with a communications error		Sets remote I/O communications start or stop when an error occurs in master communications (set on DIP switch on the front of the Master).	
Communications parameters		Can be changed (communications cycle time).	
Sending explicit messages to slaves made by another company		Supported	
Master error history		Yes (Can be read by the Configurator or FINS command.)	
Setting communications cycle time		Supported (by the Configurator)	Supported (with or without the Configurator)
Monitoring current communications cycle time		Supported	
Switch that disables communications error stoppage		The switch that cancels communications error stoppage is different from the one that starts remote I/O communications.	The same software switch is used to cancel communications error stoppage and to start remote I/O communications.
Error with multiple Units mounted		A mounting error occurs with fixed allocations.	An error does not occur even with multiple Units mounted. Operation will continue even if the same words are allocated to more than one Unit.
Error code on the front panel 7-segment display	Error with multiple Units mounted	Display: E4	No check for multiple mounted Units.
	PLC initialization error	Display: F5	Used more detailed error codes in initialization phase. Display: H□.
	RAM error	Display: F5	Changed to H3 (related to the above).
	Incorrect switch setting	Display: F5	Changed to H5 (related to the above).
	Routing table error	Display: E5	Changed to HC (related to the above).
	PLC Unit WDT error	Display: All lit	Display: E7 Unit does not reset. Explicit server functions run.
	EEPROM error	Display: F8 Stops operation to store the scan list.	Display: E3 Operation continues for error history only (scan list stored in flash ROM)
	Configuration data error (scan list SUM error)	Display: E8 Continues operation in DISABLED mode.	Display: F7 Stops remote I/O communications in Master communications.

1-5 Outline of the Configurator

Allocations for remote I/O communications can be set in any order of node addresses from the Configurator. Users can also set remote I/O communications connections.

Device (master/slave) registration, I/O allocations, and other operations are especially easy to perform because of graphic operations, including dragging and dropping icons.

Any of the following methods can be used to connect the Configurator to DeviceNet. All the connection methods support the same online connection functions.

Connection from Dedicated Board/ Card Installed in Computer

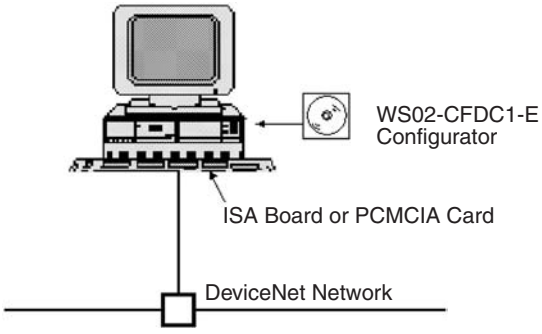

The Configurator is treated as a single DeviceNet node.

Serial Connection from COM port of Computer

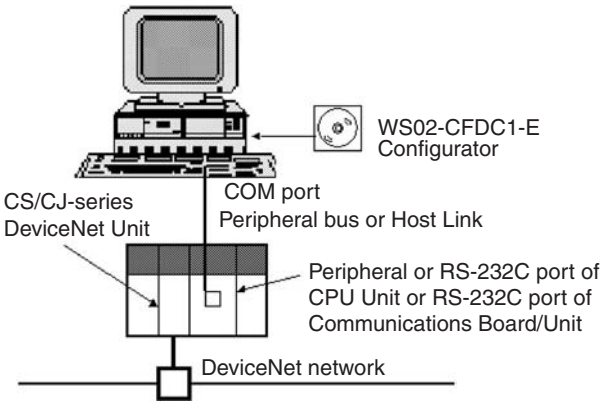

The Configurator is not treated as a single DeviceNet Node.

1-5-1 Models

Product	Model	Contents	Method of connecting personal computer to network	Personal computer	OS
Configurator (Ver. 2.□)	WS02-CFDC1-E	Installation disk (CD-ROM)	Either one of the following methods • Serial connection • Dedicated PCI Board • Dedicated PCMCIA Card (See table below.)	IBM PC/AT or compatible	Windows 95, 98, Me, NT4.0, 2000, or XP

Note Use the following dedicated Boards and Card.

Model	Contents	Personal computer	OS
3G8F7-DRM21	Dedicated PCI Board (Configurator is not included.)	IBM PC/AT or compatible	Windows 95, 98, NT4.0, 2000, or XP
3G8E2-DRM21-V1	Dedicated PCMCIA Card and Configurator (Ver.2) installation disk		Windows 98, Me, 2000, or XP

The main functions of the Configurator are illustrated below. For further details, refer to the *DeviceNet Configurator Operation Manual* (W382).

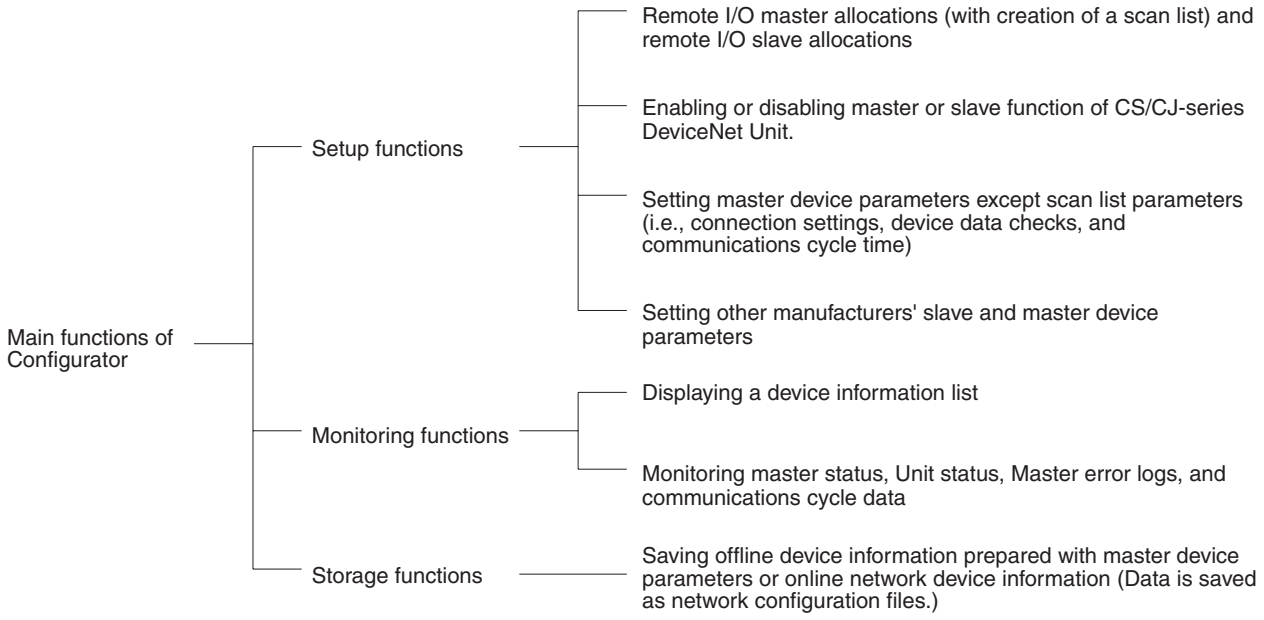

Note

1. Master device parameters used in a scan list are created with either of the following methods.
   a) Using the Parameter Wizard
   b) Setting all parameters
2. Connect only one Configurator to each Network.
3. Do not use the Configurator in a location with too much electromagnetic noise, particularly when using a PCMCIA Card. If noise is too extreme, the computer may run out-of-control, although there will be no negative effects on the DeviceNet network even if noise causes the computer to run out-of-control.
4. The only DeviceNet masters that can be handled by the Configurator are OMRON's CS1W-DRM21(-V1), CJ1W-DRM21, CVM1-DRM21-V1, and C200HW-DRM21-V1.

1-5-2 Configurator Specifications

Item		Specification	
Operating environment	Hardware	Personal computer: IBM PC/AT or compatible CPU: Pentium 166 MHz or higher (with Windows NT) Memory: 32 Mbytes Hard disk: A minimum of 15 Mbytes	
	OS	Windows 95, 98, Me, NT4.0, 2000 or XP	
Network connection method		Dedicated Board/Card	3G8F7-DRM21: Dedicated PCI Board 3G8E2-DRM21-V1: Dedicated PCMCIA Card
		Serial connection (to DeviceNet network with gateway)	• Peripheral or RS-232C port of PLC with DeviceNet Unit mounted. • RS-232C port of Serial Communications Board/Unit. Serial communications mode: Peripheral bus or Host Link
Dedicated Board/Card	Network status	A single node address is used.	
	Connectable number of Boards/Cards	One/network	

Item		Specification
Main functions	Setup functions	Master device parameter settings for OMRON's Master • Remote I/O master allocations (with a scan list) The node address order can be set as desired. Two output blocks and two input blocks can be allocated. (See note.) • Remote I/O slave allocations • Setting master remote I/O communications connections • Setting slave remote I/O communications connections • Enabling or disabling device data checks through remote I/O communications (checks on slave vendor ID, device type, and product code data) • Setting an explicit message monitor timer list • Setting a COS/cyclic heart beat timer value • Setting the communications cycle time **Note** 1. A device Parameter Wizard is supported for the Master. 2. Using remote I/O master allocations eliminate restrictions on node addresses. Furthermore, a number of masters can be mounted to the PLC with no allocation area duplication.
		Setting parameters for other manufacturers' slaves (EDS file required).
		Setting node addresses and baud rates
	Monitoring functions	• Listing information on devices connected to the network (in node address order or remote I/O configuration order, for example) • Monitoring Unit status data, Master function status data, and slave function status data • Monitoring Master error history CVM1-DRM21-V1 or C200HW-DRM21-V1: Up to 20 records of time, error code, and error condition data CS1W-DRM21-V1 or CJ1W-DRM21: For unit version 1.1 or later, up to 96 records of time, error code, and error condition data, and for earlier unit versions, up to 64 records • Monitoring communication cycle time
	Storage functions	Saving offline device information prepared with master device parameters or online network device information. Such data is saved as network configuration files.
	Other functions	• Reading/writing and preparing EDS files • Checking for duplicate I/O allocations in master parameters • Printing master/slave device parameters • Installing Expansion Modules to expand functions
Files that can be written		• Master parameter files (parameters for OMRON Master: 1 file per node) **Note** Slave communications are saved as well in the master device parameters file with the DeviceNet Unit. • Slave device parameter files (parameters for slaves: 1 file per node) • Network file (all master/slave parameters for masters/slaves in the device list: 1 file/network) • EDS file (DeviceNet device definition file: 1 file/device type)

1-6 Basic Operating Procedures

1-6-1 Network Installation Procedure

Note For details on the network installation procedure, refer to the *DeviceNet Operation Manual* (W267). Only a general description is given here.

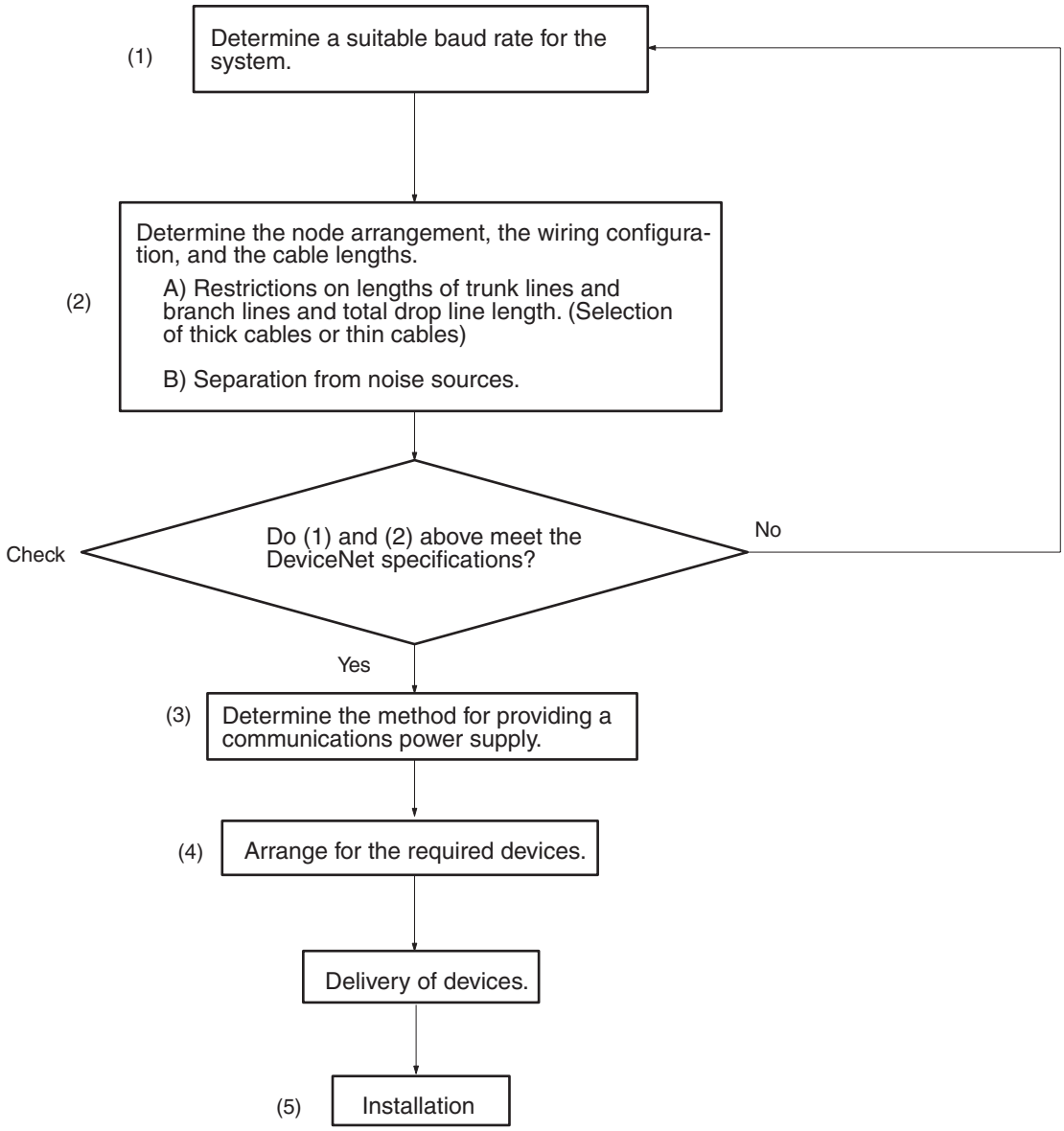

1-6-2 Hardware Preparations for Communications

1,2,3... 1. Set the initial settings for the DeviceNet Unit:

Unit No. (UNIT No.)
Node address (NODE ADR)
Baud rate (DIP switches 1 to 2)
Communications continue/stop setting for communications errors (DIP switch pin 3)(with Master communications)
I/O hold/clear for communications errors (DIP switch pin 4)(with Slave communications)

2. Set the initial settings for slaves:

Node address (Pins 1 to 6)
Baud rate (Pins 7 and 8)
Etc.

3. Mount the Master and wire the network.

   Treat as a CPU Bus Unit.
   Can mount to a CPU Rack or Expansion Rack.
   With fixed allocations: 3 Units max.
   With user-set allocations: 16 Units max.

4. Connect a Programming Device to the PLC and turn ON the power supply to the PLC.
5. Generate the I/O tables.

Note
1. A slave may not go online if the communications power supply is turned ON after the slave is turned ON.
2. The communications power supply and slave power supply, the slave power supply and PLC power supply, or all three of these power supplies may be turned ON simultaneously.

1-6-3 Creating Routing Tables

The DeviceNet Unit functions as a Communications Unit in the same way as a SYSMAC LINK Unit, Controller Link Unit, and Ethernet Unit.

It is therefore necessary to create routing tables for the communications functions to be used, as shown in the table below.

<table>
<tr><th>Mounted Units</th><th>Using master or slave functions only</th><th>Using explicit message communications (not supported across networks)</th><th>Using FINS message communications not across networks</th><th>Using FINS message communications across networks</th></tr>
<tr><td>DeviceNet Unit is the only Communications Unit mounted</td><td colspan="3">Not necessary (See note 1.)</td><td rowspan="3">Local network table (see note 2.) and relay network table are necessary.</td></tr>
<tr><td>Multiple DeviceNet Units mounted as Communications Units</td><td>Not necessary (See note 1.)</td><td colspan="2">Local network table necessary (See note 2.)</td></tr>
<tr><td>DeviceNet Unit and other Communications Unit mounted simultaneously</td><td colspan="3">Local network table necessary (See note 2.)</td></tr>
</table>

Note
1. If a local network table already exists in the CPU unit being used, the DeviceNet Unit must be registered in that table.
2. The DeviceNet Unit must be registered in the local network table.

Refer to *6-3 Using FINS Message Communications* for information on the routing tables.

The routing tables are created using CX-Net inside the CX-Programmer. Refer to the *CX-Programmer Operation Manual* (WS02-CXPC1-EV50) (W446) for details.

Note
1. A local network table is sometimes necessary even when the DeviceNet Unit is not operating across networks.
2. If you prepare a local network table inside the CPU Unit, be sure to register the DeviceNet Unit.

3. Even if a local network table exists inside the CPU Unit, the 7-segment display of the DeviceNet Unit may indicate “HC” and FINS message/explicit message communications may not be possible unless the DeviceNet Unit is registered in the local network table.

1-6-4 Procedures Prior to Starting Communications

Using the Master Function

To use the master function, the Master Enable Switch (word n, bit 06) must be turned ON from a Programming Device. Enable master communications through CS1W-DRM21(-V1) properties if you are using a Configurator.

Note

1. Make sure the scan list is enabled when using the master function. This will allow you to check whether slaves are online or not from the CPU Unit so that you will be able to determine whether or not the DeviceNet is communicating properly.
2. Remote I/O communications with a specified slave can be turned OFF (disconnected) by turning ON (1) the corresponding Disconnect/Connect Switch (words n+6 to n+9) when a slave is replaced or is registered in the scan list prior to being connected. These switches are cleared when the power supply is turned OFF, however, so a bit must be turned back ON (1) from the ladder program when the power turns ON for it to be valid again.

Fixed Allocations

Use the following procedure to use fixed allocations. Refer to *4-3 Fixed Allocations* for details on fixed allocations.

1,2,3...

1. Turn ON the communications, slave, and PLC power supplies.

   Note Turn ON the communications power supply before turning ON the slave power supplies or the slaves may not go online.
2. Switch the CPU Unit to PROGRAM mode.
3. Check Unit Status 2 (word n+11, bit 03) from a Programming Device connected to the CPU Unit to see if the master function is ON (enabled). If it is enabled, skip step 4 below and proceed to step 5.
4. If the master function is OFF (disabled), turn ON the Master Enable Switch (word n, bit 06) from a Programming Device connected to the CPU Unit.

   Note Execute this only when master communications are turned OFF. (If the Master Enable Switch is turned ON when master communications are ON, a Unit error will occur and a C2 error will be displayed on the 7-segment display on the front panel.)
5. Turn ON the Master Fixed Allocation Area Setting 1 to 3 Switches (word n, bits 8 to 10). Master remote I/O communications will begin with the scan list disabled.
6. Turn ON the Scan List Enable Switch (word n, bit 00). Master remote I/O communications will begin with the scan list enabled.
7. Switch the CPU Unit to RUN mode.

User-set Allocations Using Allocated DM Area Words

Use the following procedure to set allocations using the words allocated to the Unit in the DM Area. Refer to *4-4 User-set Allocations* for details on user-set allocations.

1,2,3...

1. Turn ON the communications, slave, and PLC power supplies.

   Note Turn ON the communications power supply before turning ON the slave power supplies or the slaves may not go online.

2. Switch the CPU Unit to PROGRAM mode.
3. Check Unit Status 2 (word n+11, bit 03) from a Programming Device connected to the CPU Unit to see if the master function is ON (enabled). If it is enabled, skip step 4 below and proceed to step 5.
4. If the master function is OFF (disabled), turn ON the Master Enable Switch (word n, bit 06) from a Programming Device connected to the CPU Unit.

   Note Execute this only when master communications are turned OFF. (If the Master Enable Switch is turned ON when master communications are enabled, a Unit error will occur and a C2 error will be displayed on the 7-segment display on the front panel.)
5. Input data in advance into the Master User Allocation Setup Table (words m+1 to m+6) and the Allocation Size Setup Table (specify the position in words m+5 and m+6)
6. Turn ON the Master User-set Allocation Switch (word n, bit 11). Master remote I/O communications will begin with the scan list enabled.
7. Switch the CPU Unit to RUN mode.

User-set Allocations Using the Configurator

Use the following procedure to set allocations using the Configurator. Refer to *DeviceNet Configurator Operation Manual* for details on Configurator operating procedures

1,2,3...

1. Turn ON the communications, slave, and PLC power supplies.

   Note Turn ON the communications power supply before turning ON the slave power supplies or the slaves may not go online.
2. Switch the CPU Unit to PROGRAM mode.
3. Create a network configuration file and device parameters file from the Configurator. (Enable master communications in CS1W-DRM21(-V1) properties at this time.)
4. Download the above files to the devices on the network. Remote I/O communications will begin with the scan list enabled.
5. Switch the CPU Unit to RUN mode.

Using Slave Function

To use the slave function, the Slave Enable Switch (word n+1, bit 06) must be turned ON from a Programming Device. Enable slave communications through CS1W-DRM21(-V1)/CJ1W-DRM21 properties if you are using a Configurator.

With fixed allocations or allocations set in the allocated DM Area words, slave communications must be disabled prior to area allocation and must be enabled following area allocation. The order of the procedure is thus Slave Stop Switch (if slave communications are enabled), area allocation, and Slave Enable Switch.

Note Slave communications must be disabled prior to area allocation when using fixed allocations or allocations set in the allocated DM Area words, and the settings must be read to the Unit when slave communications are enabled. Allocations will not be valid if slave communications are enabled during area allocation.

Fixed Allocations

Use the following procedure to use fixed allocations. Refer to *5-2 Fixed Allocations* for details on fixed allocations.

1,2,3...

1. Switch the CPU Unit to PROGRAM mode.
2. Check Unit Status 2 (word n+11, bit 07) from a Programming Device connected to the CPU Unit to see if the slave function is OFF (disabled). If it is disabled, skip step 3 below and proceed to step 4.
3. If slave communications are enabled, turn ON the Slave Stop Switch (word n+1, bit 07).
4. Turn ON the Slave Fixed Allocation Area Settings 1 to 3 Switches (word n+1, bits 8 to 10).
5. Turn ON the Slave Enable Switch (word n+1, bit 06) from a Programming Device connected to the CPU Unit.

   Note Execute this only when slave communications are turned OFF. (If the Slave Enable Switch is turned ON when slave communications are enabled, a Unit error will occur and a C2 error will be displayed on the 7-segment display on the front panel.)
6. Switch the CPU Unit to RUN mode. Slave remote I/O communications will begin.

User-set Allocations Using Allocated DM Area Words

Use the following procedure to set allocations using the words allocated to the Unit in the DM Area. Refer to *5-3 User-set Allocations* for details on user-set allocations.

1,2,3...

1. Switch the CPU UNit to PROGRAM mode.
2. Check Unit Status 2 (word n+11, bit 07) from a Programming Device connected to the CPU Unit to see if the slave function is OFF (disabled). If it is disabled, skip step 3 below and proceed to step 4.
3. If Slave is enabled, turn ON the Slave Stop Switch (word n+1, bit 07).
4. Input data in advance into the Slave User Allocation Setup Table (words m+8 to m+13).
5. Turn ON the user Slave User-set Allocation Switch (word n+1, bit 11).
6. Turn ON the Slave Enable Switch (word n+1, bit 06) from a Programming Device connected to the CPU Unit.

   Note Execute this only when slave communications are turned OFF. (If the Slave Enable Switch is turned ON when slave communications are enabled, a Unit error will occur and a C2 error will be displayed on the 7-segment display on the front panel.)
7. Switch the CPU Unit to RUN mode. Slave remote I/O communications will begin.

User-set Allocations Using the Configurator

Use the following procedure to set allocations using the Configurator. Refer to *DeviceNet Configurator Operation Manual* for details on Configurator operating procedures

1,2,3...

1. Switch the CPU Unit to PROGRAM mode.
2. Create a device parameter file from the Configurator. (Enable Slave communications in CS1W-DRM21(-V1) properties at this time.) Then download the file to the DeviceNet Unit.
3. Turn ON the Slave Enable Switch (word n+1, bit 06) from a Programming Device connected to the CPU Unit.

   Note Execute this only when slave communications are turned OFF. (If the Slave Enable Switch is turned ON when slave communications are

enabled, a Unit error will occur and a C2 error will be displayed on the 7-segment display on the front panel.)

4. Switch the CPU Unit to RUN mode. Slave remote I/O communications will begin.

Message Communications Only (Neither Master nor Slave Function Used)

The DeviceNet Unit does not have to be registered in the scan list if it is only used for message communications. Message communications (send and receive) can be executed with both master and slave communications disabled.

1-7 List of Usage Methods by Purpose

Situation			Action	Page
Design	Allocating any words for remote I/O	In order of node addresses	Set using the allocated DM Area words. (Master User Allocations Setup Table and Allocation Size Setup Table) **Note** Allocations using allocated DM Area words: Order of node addresses and two blocks, OUT 1 and IN 1.	112
		Not in order of node addresses	Set using the configurator. **Note** Allocations using Configurator: Any node address order and four blocks, OUT 1, IN 1, OUT 2 and IN 2. Allocation is much easier using a wizard.	117
	Using the Unit as a slave		Set using the allocated DM Area words.	126
	Performing message communications between PLCs to which DeviceNet Units are mounted		Execute communications instructions from the user program.	138
	Mounting multiple DeviceNet Units using master communications to a single PLC		3 Units max. with fixed allocations 16 Units max. with user-set allocations	96
	Mounting multiple DeviceNet Units using slave communications to a single PLC		3 Units max. with fixed allocations 16 Units max. with user-set allocations	126
	Connecting multiple PLCs (master communications) in a network		Supported by user-set allocations using allocated DM Area words or user-set allocations using the Configurator.	126
	Connecting a single Master PLC and multiple Slave PLCs in a network		Set multiple PLCs to Slave mode from the allocated DM Area words or the Configurator. **Note** Up to 64 Units may be on a network. (Example: 1 Master PLC and 63 Slave PLCs)	126
	Sending DeviceNet explicit messages		Set the FINS command code to 2801.	142
	Setting the node address for a DeviceNet Unit		Set the rotary switches on the front of the DeviceNet Unit.	53
	Setting the baud rate for the DeviceNet Unit		Set the DIP switch on the front of the DeviceNet Unit.	54
	Stopping remote I/O communications for communications errors		Set the DIP switch on the front of the DeviceNet Unit.	55
	Holding OUT data in slave I/O memory for communications errors		Set the DIP switch on the front of the DeviceNet Unit.	55

Situation		Action	Page
Operation	Stopping remote I/O communications with all Slaves	Stop communications using the Configurator or the Remote I/O Communications Stop Switch in the allocated CIO Area words.	66
	Using a scan list in remote I/O communications (fixed allocations)	Turn ON the Scan List Enable Switch in the allocated CIO Area words.	65
	Enabling a scan list in remote I/O communications (user-set allocations by allocated DM Area words)	Set the allocation areas using the allocated DM Area words, and turn ON the user-set allocations user setting switch for the allocated CIO Area words.	68
	Changing the communications system configuration	Turn ON the Scan List Clear Switch for the allocated CIO Area words, and turn the Scan List Enable Switch back ON after you change the communications system.	104
	Checking master I/O allocation status (fixed allocations, user-set allocations by allocated DM Area words, user-set allocations by the Configurator)	Monitor the Master Status 2 status codes in the allocated CIO Area words from a Programming Device.	78
	Checking to see if all slaves are registered in the scan list	Check the Registered Slave Table in the allocated CIO Area words.	81
	Checking to see if all slaves are performing remote I/O communications properly	Check the Normal Slave Table in the allocated CIO Area words.	82
	Checking to see if there is an error history in the DeviceNet Unit	Check the error history (registration yes/no) in the allocated CIO Area words from a Programming Device.	76
	Monitoring the error history in the DeviceNet Unit	Execute the device monitor function from the Configurator (Error History Tab).	DeviceNet Configurator Operation Manual
	Monitoring status of the DeviceNet Unit	Execute the device monitor function from the Configurator (Status and Unit Status Tabs).	
	Checking the current communications cycle time	Execute the device monitor function from the Configurator (Current Communications Cycle Time Tab).	
	Adjusting the communications cycle time	Execute the device parameter edit function from the Configurator (Communications Cycle Time Tab).	
	Saving all parameters, like scan list data, for masters and slaves on the network	Save the network configuration from the Configurator.	
	Replacing a DeviceNet Unit	1. Insert a Memory Card in the CPU Unit and turn ON the Unit Setup File Backup Switch in the allocated CIO Area words. 2. Replace the DeviceNet Unit. 3. Turn ON the Unit Setup File List Switch in the allocated CIO Area words. 4. Turn ON Scan List Clear Switch in the allocated CIO Area words. 5. Make sure the slave is connected, and then turn ON the Scan List Enable Switch.	232

SECTION 2
Nomenclature and Installation

This section describes the nomenclature and installation of the DeviceNet Unit.

2-1 Nomenclature and Functions 50
2-1-1 Nomenclature and Functions 50
2-1-2 Status Indicators: MS and NS. 51
2-1-3 Seven-Segment Display 52
2-1-4 Switch Settings 53
2-2 Installing the DeviceNet Unit 55
2-2-1 System Configuration Precautions 55
2-2-2 Mounting. 56
2-2-3 Handling Precautions 57
2-2-4 External Dimensions. 59

2-1 Nomenclature and Functions

2-1-1 Nomenclature and Functions

CS1W-DRM21(-V1)

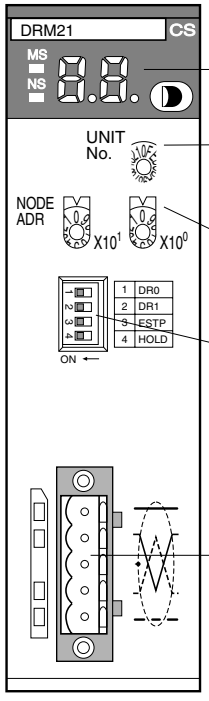

CJ1W-DRM21

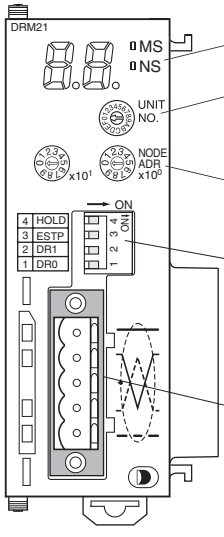

Indicators

The DeviceNet Units are equipped with the following indicators that indicate the operating status of the node itself and the overall network.

1,2,3...

1. Two status indicators (two-color: Green or red LEDs)
2. A two-digit, 7-segment display
3. Two dot indicators

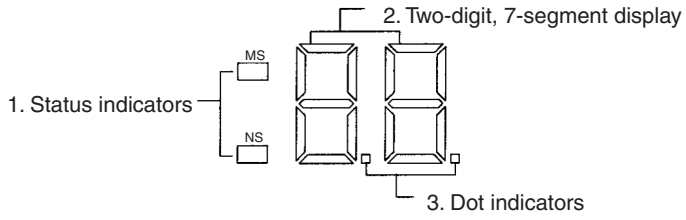

2-1-2 Status Indicators: MS and NS

The MS (Module Status) indicator indicates the status of the node itself and the NS (Network Status) indicator indicates the status of the network.

The MS and NS indicators can be green or red and they can be OFF, ON, or flashing (alternating 0.5-s ON and 0.5-s OFF.) The following table shows the meaning of these indicator conditions.

Indi-cator	Color	Status	Meaning (likely errors)
MS	Green	ON	Normal operating status Communications are being performed normally.
	Red	ON	A non-recoverable, fatal error has occurred. (Watchdog timer error, memory error, or system error.) Replace the DeviceNet Unit.
		Flashing	A recoverable, non-fatal error has occurred. (Structure error, switch setting error, PLC initialization error, PLC interface error, or routing table error.) Correct the error and reset the Unit.
	---	OFF	Power isn't being supplied or the Unit is being reset.
NS	Green	ON	The Unit is online with the network and remote I/O communications have been established with a slave registered in the scan list or message communications have been established.
		Flashing	The Unit is online with the network, but neither remote I/O communications nor message communications have been established. Either the scan list is being read, or both remote I/O communications and message communications are disabled.
	Red	ON	A fatal communications error has occurred. Network communications are not possible. (Node address duplicated or Bus Off error)
		Flashing	A non-fatal communications error has occurred. (Communications error, setup error, or verification error)
	---	OFF	The Unit is not online with the network. (There is no network power supply, the Unit is being reset, a minor failure, or a sending error has occurred.)

2-1-3 Seven-Segment Display

In addition to the MS and NS indicators, DeviceNet Units have a 2-digit, 7-segment display that normally indicates the master node address. When an error occurs, the display will alternate between the error code and the node address of the faulty slave.

There are dot indicators at the lower-right corner of each digit. The left dot indicator shows whether or not the master is operating and whether the scan list is enabled or disabled. The right dot indicator shows whether or not the slave is operating.

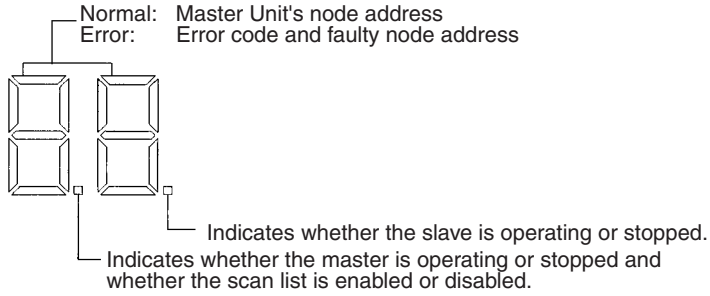

Seven-segment Digits

The following table shows the functions of the 7-segment digits.

Status		Display	
Remote I/O communications active and normal		Displays the master's node address (00 to 63)	Lit
From power ON to completion of node address check (master function disabled, slave function disabled, or both disabled)			Flashing
Remote I/O communications started			Flashing (until communications actually start)
From completion of the node address check until the start of remote I/O communications			Flashing
Error	Watchdog timer	Not lit	
	Memory error or system error	Error code only	Lit
	Other errors	Alternately displays the error code and error node address (see diagram below)	
Scan list	Reading	"- -"	Flashing
	Registered		

The following diagram shows the alternating error code/ node address display.

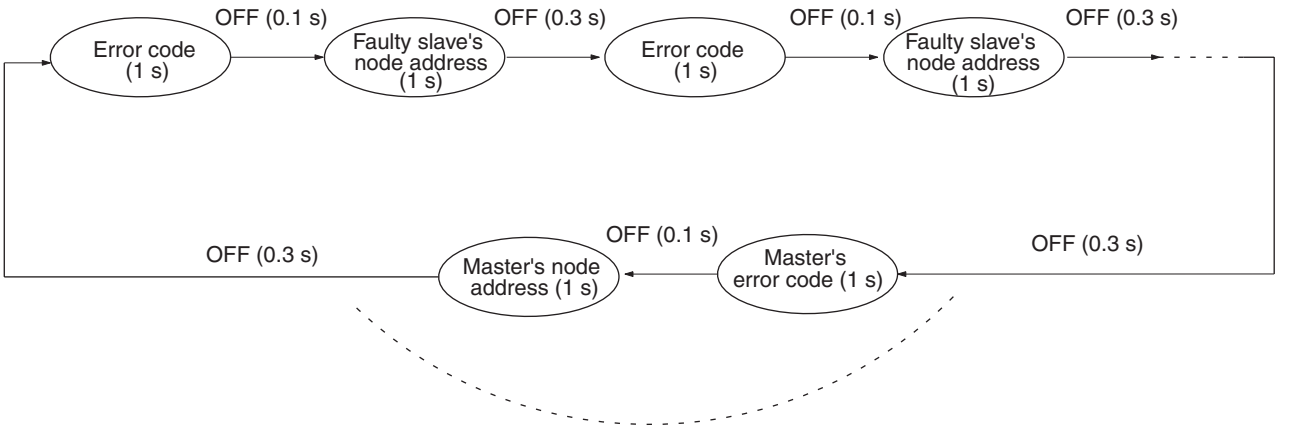

If there is an error at the DeviceNet Unit.

The master's error code and master's node address will be displayed if an error has occurred at the master.

There is no priority in the error codes; all errors that have occurred will be displayed in order. All error codes begin with letters, so they can be distinguished from node addresses immediately.

Dot Indicators

The following table shows the functions of the dot indicators.

Indicator	Content	Display
Left dot	Scan list enabled/ disabled, master function disabled	ON: Master function disabled Flashing: Scan list disabled mode OFF: Scan list enabled mode
Right dot	Slave function disabled	ON: Slave function disabled OFF: Slave operating

2-1-4 Switch Settings

Unit No. Switch

CS1W-DRM21(-V1) **CJ1W-DRM21**

Use this switch to set the unit number of the DeviceNet Unit as a CPU Bus Unit. The unit number setting determines the CIO and DM area words allocated to the Unit as software switches and the status area.

Setting method: One-digit hexadecimal

Setting range: 0 to F

Note

1. The unit number is set to 0 at the factory.
2. Any unit number from 0 to F can be set as long as it hasn't been set on another CPU Bus Unit connected to the same PLC.
3. Use a small flat-blade screwdriver to turn the rotary switches; be careful not to damage the switch.
4. Always turn OFF the PLC before changing the unit number setting.
5. If the unit number is the same as one set on another CPU Bus Unit connected to the same PLC, a duplicate number error will occur in the PLC and it won't be possible to start up the DeviceNet network.

Node Address Switches

Use these switches to set the node address of the Unit.

CS1W-DRM21(-V1) **CJ1W-DRM21**

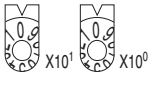

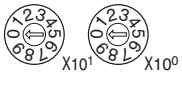

Setting method: Two-digit decimal

Setting range: 0 to 63

Note

1. The node address is set to 63 at the factory.
2. Any node address from 0 through 63 can be set as long as it hasn't been set on another slave node.
3. If the node address is the same as one set on another node, a node address duplication error will occur and it won't be possible to start up network communications.
4. Node address 0 cannot be used for FINS message communication. Use a node address other than 0 for FINS message communication.

DIP Switch

The DIP switch on the front of the DeviceNet Unit is used to set the baud rate, whether communications will be continued or stopped when a communications error occurs, and whether to hold or clear the remote outputs when a communications error occurs in the slave function.

CS1W-DRM21(-V1)

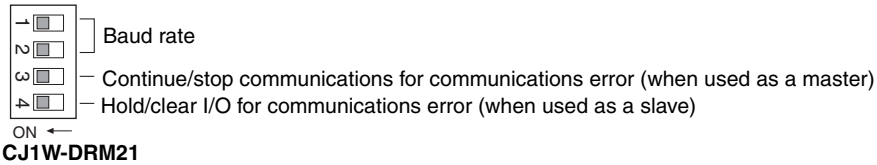

CJ1W-DRM21

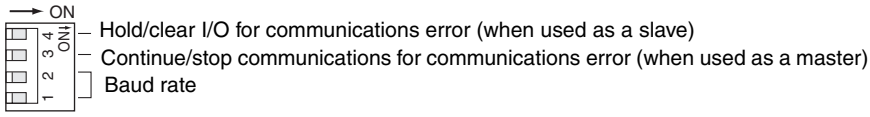

The settings of the DIP switch pins are shown in the following table. All pins are set to OFF at the factory.

Pin	Function	Setting
1	Baud rate	See the next table.
2		
3	Continue/stop remote I/O communications for communication errors (when used as a master)	OFF: Continue communications ON: Stop communications
4	Hold/clear remote outputs for communications error (when used as a slave)	OFF: Clear remote outputs ON: Hold remote outputs

Baud Rate

Pins 1 and 2 are used to set the baud rate as shown in the following table.

Pin 1	Pin 2	Baud rate
OFF	OFF	125 kbps
ON	OFF	250 kbps
OFF	ON	500 kbps
ON	ON	Not allowed.

Note

1. Always turn OFF the PLC before changing the DIP switch settings.
2. Set the same baud rate on all of the nodes (Master and Slaves) in the Network. Any slaves with baud rates different from the master's rate won't be able to participate in communications and may cause a communications error between nodes that have been set properly.

Continue/Stop Remote I/O Communications

When the DeviceNet Unit is used as a master, pin 3 is used to set whether or not communications will stop after a communications error.

Pin 3	Function
OFF	Continue communications.
ON	Stop communications.

If pin 3 is ON, remote I/O communications will be stopped if one of the following errors occurs.

Remote I/O Communications Error Flag (n+12, bit 02 is ON)
Send Timeout Flag (n+10, bit 08 is ON)
Network Power Error Flag (n+10, bit 07 is ON)

Remote I/O communications will remain stopped even if the error is cleared. (Message communications and slave functions will continue.) To resume communications, turn ON the Remote I/O Communications Start Bit (word n, bit 02) of Software Switches 1. Refer to *3-2 Allocated CIO Area Words* for details.

Note The 7-segment display will show “A0” when remote I/O communications stop. Refer to *SECTION 9 Troubleshooting and Maintenance.*

If pin 3 is OFF, remote I/O communications will stop if a send timeout or network power error occurs, but will restart automatically when the cause of the error is cleared.

Hold/Clear Remote Outputs

When the DeviceNet Unit is used as a slave, pin 4 is used to set whether to hold or clear remote outputs when a communications error occurs.

Note If the DeviceNet Unit is used as a slave, the 7-segment display will show “L9” when remote I/O communications stop. Refer to *SECTION 9 Troubleshooting and Maintenance.*

Communications Connectors

Color stickers that match communications cable colors are attached to the communications connectors. Match the colors when connecting communications cables to the connectors. These colors are given in the following table

Color	Signal
Black	Power line, negative voltage (V–)
Blue	Communications line, low (CAN L)
---	Shield
White	Communications line, high (CAN H)
Red	Power line, positive voltage (V+)

For details on communications specifications and wiring, refer to *DeviceNet (CompoBus/D) Operation Manual* (W267).

Note Before connecting communications cables, turn OFF the PLC power supply, all slave power supplies, and the communications power supply.

2-2 Installing the DeviceNet Unit

2-2-1 System Configuration Precautions

- I/O words are allocated to CPU Bus Units according to the unit number setting on the switch located on the front panel of the Unit, not according to Unit slot numbers. Refer to *3-1 Overview of Word Allocations.*

- In the CS-series, up to 16 Units can be mounted to the CS1W-BC□□3 CPU Backplane or CS1W-BI□□3 Expansion CPU Backplane.
- In the CJ-series, up to 16 Units can be mounted to the CPU Unit or Expansion Unit (but no more than 10 Units on either).

2-2-2 Mounting

CS-series

Mount the DeviceNet Unit to the Backplane using the following procedure.

1,2,3...

1. Hook the claw on the bottom of the Unit onto the Backplane.

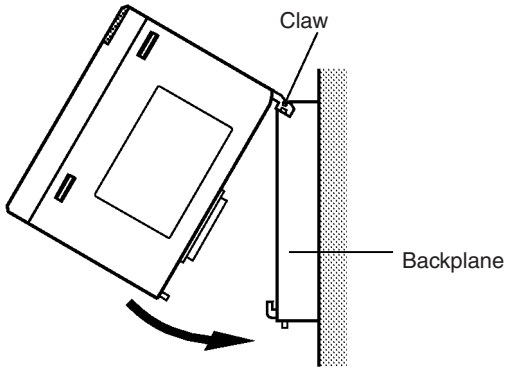

2. Insert the Unit into Backplane connectors and securely tighten the screw at the bottom of the Unit. Tighten the screws to a torque of 0.4 N·m.
3. When removing the Unit, first loosen the screw at the bottom of the Unit.

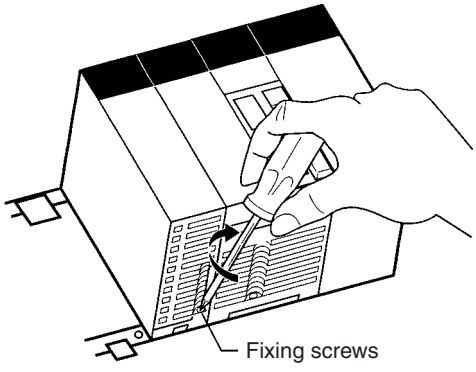

Note When mounting the Unit, provide the clearance shown below to facilitate easy mounting or dismounting.

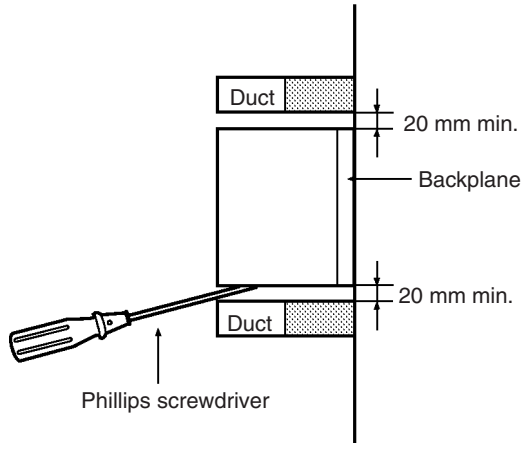

CJ-series

1. Carefully align the connectors to mount the DeviceNet Unit.

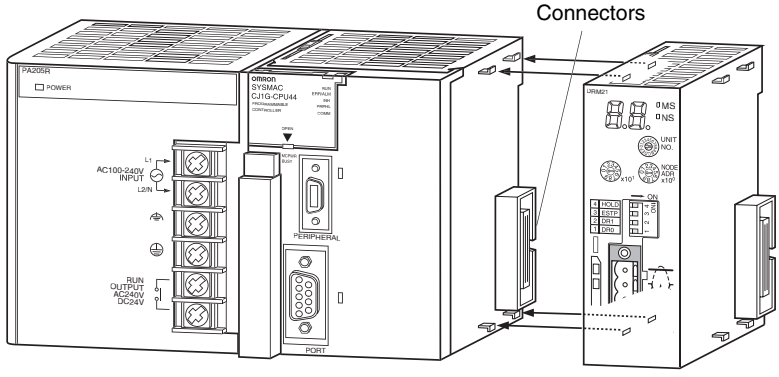

2. Move the yellow sliders on the top and bottom of the Unit until they click into position, to lock.

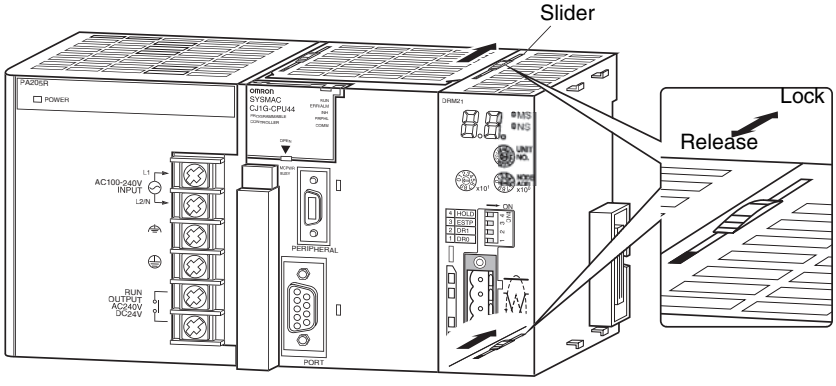

Note If the sliders are not securely locked, the DeviceNet Unit functions may not operate sufficiently.

To dismount the Unit, move the sliders to the “Release” direction.

2-2-3 Handling Precautions

- Always turn OFF the power supply to the PLC before mounting or dismounting a Unit or connecting or disconnecting cables.

- Provide separate conduits or ducts for the I/O lines to prevent noise from high-tension lines or power lines.
- Leave the label attached to the Unit when wiring. Removing the label may result in malfunction if foreign matter enters the Unit.
- Remove the label after the completion of wiring to ensure proper heat dissipation. Leaving the label attached may result in malfunction.

CS1W-DRM21(-V1)

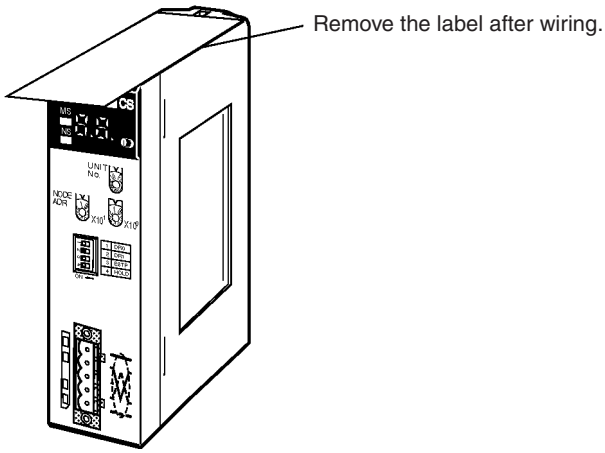

CJ1W-DRM21

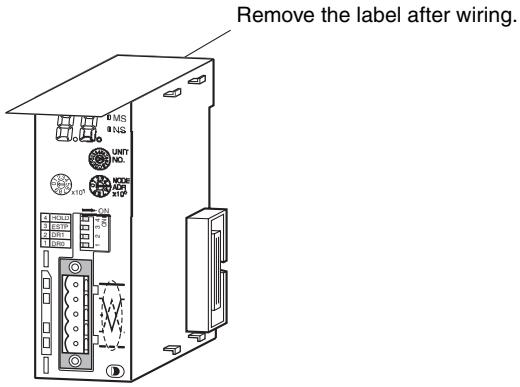

2-2-4 External Dimensions

CS1W-DRM21(-V1)

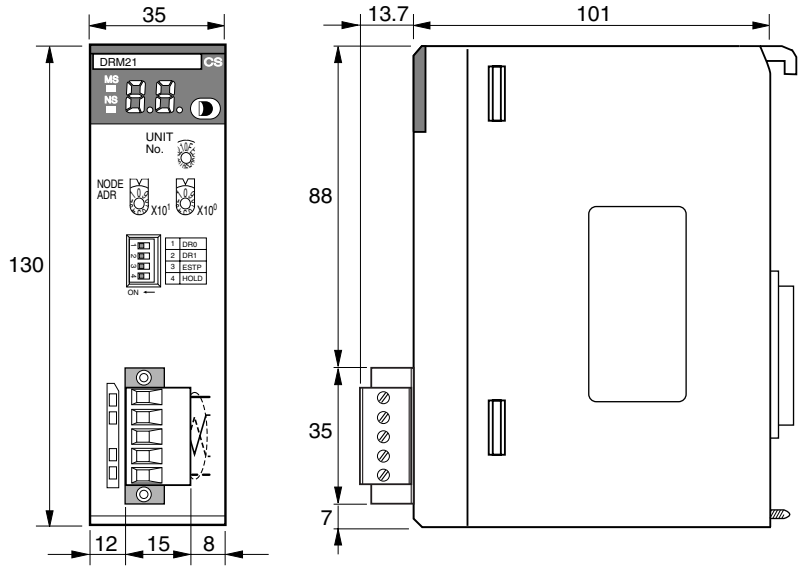

These diagrams show the dimensions of the DeviceNet Unit. Refer to the *CS1 Series CPU Unit Operation Manual* (W339) or the *CJ Series CPU Unit Operation Manual* (W393) for the dimensions of the Unit when it is mounted to the Backplane. (All dimensions are in mm.)

CJ1W-DRM21

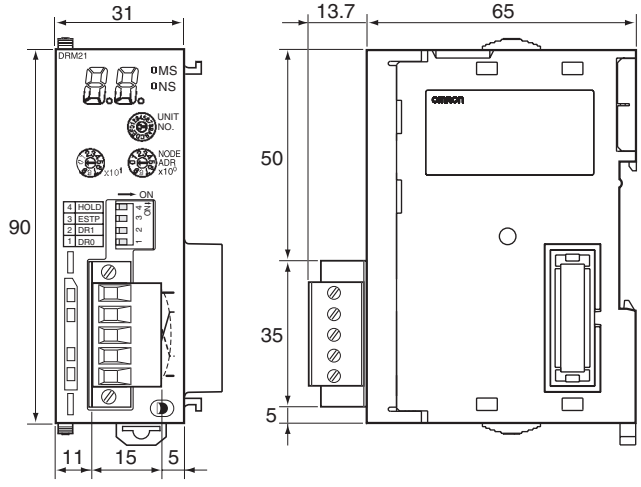

SECTION 3
Allocated CIO and DM Words

This section describes the words allocated to the DeviceNet Unit in the CIO Area and DM Area. These words both enable controlling the DeviceNet Unit and accessing Unit and network status.

3-1 Overview of Word Allocations 62
3-1-1 Allocated CIO Area Words 63
3-1-2 Allocated DM Area Words 63
3-2 Allocated CIO Area Words 64
3-2-1 Software Switches 1 (Word n) 64
3-2-2 Software Switches 2 (Word n+1) 69
3-2-3 Master COS Send Switches (Words n+2 to n+5) 72
3-2-4 Disconnect/Connect Switches (Words n+6 to n+9) 73
3-2-5 Unit Status 1 (Word n+10) 74
3-2-6 Unit Status 2 (Word n+11) 75
3-2-7 Master Status 1 (Word n+12) 77
3-2-8 Master Status 2 (Word n+13) 78
3-2-9 Slave Status 1 (Word n+14) 79
3-2-10 Slave Status 2 (Word n+15) 81
3-2-11 Registered Slave Table (Words n+16 to n+19) 81
3-2-12 Normal Slave Table (Words n+20 to n+23) 82
3-2-13 C200H Master Replacement Master Status 1 (Word n+24) 82
3-3 Allocated DM Area Words 84
3-3-1 Communications Cycle Time Setup Table 84
3-3-2 Master User Allocations Setup Table 85
3-3-3 Allocation Size Setup Table 87
3-3-4 Slave User Allocations Setup Table 88
3-3-5 Communications Cycle Time Reference Table 90
3-3-6 Master User-set Allocations Reference Table 90
3-3-7 Slave User-set Allocations Reference Table 91
3-3-8 Slave Detailed Status 92

3-1 Overview of Word Allocations

The words shown in the following diagram are allocated according to the unit number setting. For each Unit, there are 25 words allocated in the CIO Area and 100 words allocated in the DM Area.

First word allocated in the CIO Area: n = CIO 1,500 + (25 x unit number)

First word allocated in the DM Area: m = D30,000 + (100 x unit number)

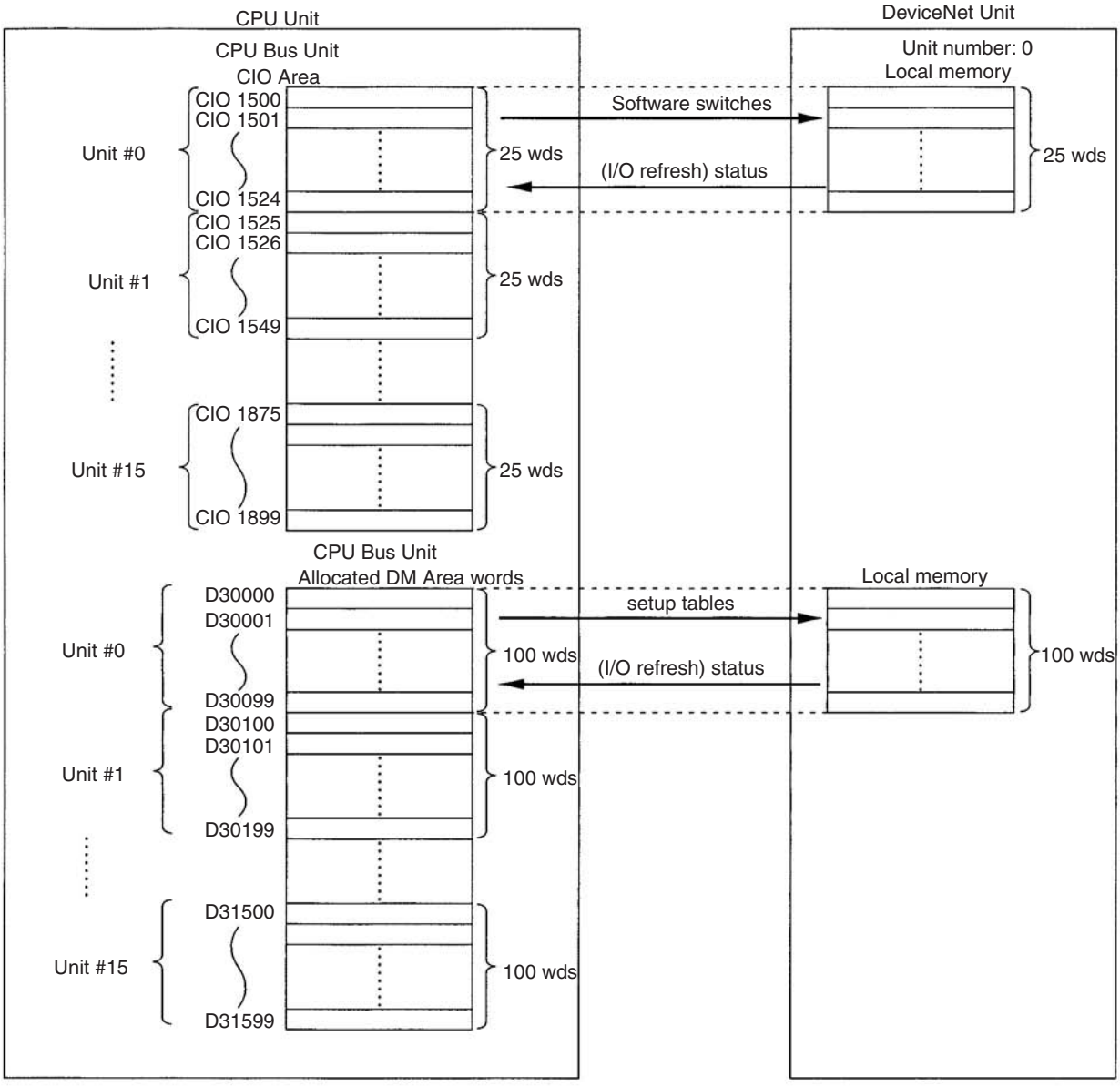

Note The CPU Bus Unit Setup words are not used with a CS/CJ-series DeviceNet Unit.

3-1-1 Allocated CIO Area Words

Software switches, DeviceNet Unit status, and error data are allocated in the CIO Area according to the unit number, as shown below. Software switches are bits used as commands from the CPU Unit to the DeviceNet Unit to enable executing Unit functions.

Unit number	Allocated words	Unit number	Allocated words
0	CIO 1500 to CIO 1524	8	CIO 1700 to CIO 1724
1	CIO 1525 to CIO 1549	9	CIO 1725 to CIO 1749
2	CIO 1550 to CIO 1574	10	CIO 1750 to CIO 1774
3	CIO 1575 to CIO 1599	11	CIO 1775 to CIO 1799
4	CIO 1600 to CIO 1624	12	CIO 1800 to CIO 1824
5	CIO 1625 to CIO 1649	13	CIO 1825 to CIO 1849
6	CIO 1650 to CIO 1674	14	CIO 1850 to CIO 1874
7	CIO 1675 to CIO 1699	15	CIO 1875 to CIO 1899

3-1-2 Allocated DM Area Words

The User Allocations Setup Tables and individual slave status by node address are allocated in the DM area.

Unit number	Allocated words	Unit number	Allocated words
0	D30000 to D30099	8	D30800 to D30899
1	D30100 to D30199	9	D30900 to D30999
2	D30200 to D30299	10	D31000 to D31099
3	D30300 to D30399	11	D31100 to D31199
4	D30400 to D30499	12	D31200 to D31299
5	D30500 to D30599	13	D31300 to D31399
6	D30600 to D30699	14	D31400 to D31499
7	D30700 to D30799	15	D31500 to D31599

3-2 Allocated CIO Area Words

Data is stored at the offset positions shown in the figure below starting from the first word allocated to the Unit in the CIO Area.

The first word can be calculated as follows from the unit number setting:

First word n = CIO 1,500 + (25 x unit number)

Word	Bit 15 … Bit 00	Direction
n	Software Switches 1	I/O CPU Unit ↔ DeviceNet Unit
n+1	Software Switches 2	
n+2 n+3 n+4 n+5	Master COS Send Switches (4 words)	
n+6 n+7 n+8 n+9	Disconnect/Connect Switches (4 words)	Outputs CPU Unit → DeviceNet Unit
n+10	Unit Status 1	Inputs CPU Unit ← DeviceNet Unit
n+11	Unit Status 2	
n+12	Master Status 1	
n+13	Master Status 2	
n+14	Slave Status 1	
n+15	Slave Status 1	
n+16 n+17 n+18 n+19	Registered Slave Table (4 words)	
n+20 n+21 n+22 n+23	Normal Slave Table (4 words)	
n+24	C200H Master Replacement Status (1)	

3-2-1 Software Switches 1 (Word n)

All switches execute some function when the user turns them ON. They turn OFF automatically after the function has been executed. Once a function is set by turning a switch ON (except for the switches listed below), it is saved regardless of whether the power is turned OFF and ON again.

- Remote I/O Communications Start Switch (bit 02, 03)
- Remote I/O Communications Stop Switch (bit 04)

Note No functions other than master and slave communications are disabled by stopping master or slave communications.

If multiple bits are turned ON simultaneously, the requests will generate errors but they will not alter Unit operation. The corresponding error bits in the following words will turn ON if a request made by a software switch ends in an error.

- Unit status area 2 (word n+11)
- Master Status 1 (word n+12)

Word n [n = CIO 1,500 + (25 x unit number)]

Bit	Name	Status	Controlled by	Unit operation	Operation conditions			Default setting
					CPU Unit operating mode	Master function	Scan list status	
00	Scan List Enable Switch	OFF→ ON	User	Enables the scan list with fixed allocations. **Note** The allocated words are the ones set for use when with the scan list is disabled. The following allocated words are the default settings when the scan list is disabled. • OUT area: CIO 3200 to CIO 3263 (1 word/1 node address) • IN area: CIO 3300 to CIO 3363 (1 word/1 node address)	Program mode	Enabled	Disabled	Scan list disabled
		OFF	Unit	Returns to OFF when the scan list is registered and the Unit starts operating with the scan list enabled.				
01	Scan List Clear Switch	OFF→ ON	User	Clears and disables the scan list. This switch clears the scan list and operates the Unit using fixed allocations with the scan list disabled regardless of the previous operation settings. The fixed allocations used the last time the scan list was disabled will be used.	Program mode	Enabled	Enabled	Scan list disabled
		OFF	Unit	Returns to OFF when the scan list data is cleared and the Unit starts operating with the scan list disabled.				

Bit	Name	Status	Controlled by	Unit operation	Operation conditions			Default setting
					CPU Unit operating mode	Master function	Scan list status	
02	Remote I/O Communications Start Switch	OFF→ ON	User	Starts remote I/O communications. **Note** 1. The switch is ignored if remote I/O communications are already running. 2. This switch is used to restart remote I/O communications if they are stopped by a communications error. 3. Communications with a slave will fail even if remote I/O communications are started if the Disconnect/Connect Switch (corresponding bit in words n+6 to 9) is ON (1: Connect).	---	Enabled	---	None
		OFF	Unit	Returns to OFF at the start of remote I/O communications. **Note** This switch will stop remote I/O communications if DIP switch pin 3 on the front panel (remote I/O communications start/stop with a communications error) is ON (stop) and there is an ongoing communications or send error.				
03	Remote I/O Communications Start Switch	OFF→ ON	User	This switch functions the same as bit 02 above. **Note** This switch is used to ensure compatibility between the software switches and C200H DeviceNet Master (C200HW-DRM21-V1).	---	Enabled	---	
		OFF	Unit					
04	Remote I/O Communications Stop Switch	OFF→ ON	User	Stops remote I/O communications. Once remote I/O communications have been stopped, they will remain stopped until the Unit has been restarted or the remote I/O communications have been restarted (i.e., until the Remote I/O Communications Start Switch is turned ON). **Note** 1. The switch is ignored if remote I/O communications are already stopped. 2. Message communications will remain enabled even if remote I/O communications have stopped.	---	Enabled	---	
		OFF	Unit	Returns to OFF when remote I/O communications stop.				
05	Reserved by system	---	---	---	---	---	---	---

Bit	Name	Status	Controlled by	Unit operation	Operation conditions			Default setting
					CPU Unit operating mode	Master function	Scan list status	
06	Master Enable Switch	OFF→ ON	User	Enables master communications. (The Unit automatically restarts.) Once enabled, the Unit will function as a Master regardless of whether the power is turned OFF and back ON again until the Master Stop Switch (word n, bit 07) is turned ON. **Note** 1. Master communications are enabled in the default settings. 2. If this bit is turned ON with master communications enabled, a Unit status error will occur and a C2 error will be displayed on the 7-segment display. The 7-segment display will go out automatically after 30 seconds.	Program mode	Disabled	---	Master enabled
		OFF	Unit	Returns to OFF at the start of master communications.				
07	Master Stop Switch	OFF→ ON	User	Stops master communications. (The Unit automatically restarts.) Turn this switch ON if the Unit will be used only for slave communications.	Program mode	Enabled	---	
		OFF	Unit	Returns to OFF after master communications stop.				
08	Master Fixed Allocation Setting 1 Switch	OFF→ ON	User	Allocates the following words for use when the scan list is disabled (default setting). (The Unit automatically restarts.) • OUT area: CIO 3200 to CIO 3263 (1 word/1 node address) • IN area: CIO 3300 to CIO 3363 (1 word/1 node address) **Note** The I/O words used with the scan list disabled are also used with the scan list enabled. (Use the Scan List Enable Switch (word n, bit 00).)	Program mode	Enabled	Disabled	Master Fixed Allocation Setting 1 enabled
		OFF	Unit	Returns to OFF after the fixed allocation areas are set.				
09	Master Fixed Allocation Setting 2 Switch	OFF→ ON	User	Functions the same as bit 08 to allocate the following words. (The Unit automatically restarts.) • OUT area: CIO 3400 to CIO 3463 (1 word/1 node address) • IN area: CIO 3500 to CIO 3563 (1 word/1 node address)	Program mode	Enabled	Disabled	
		OFF	Unit	Returns to OFF after the fixed allocation areas are set.				
10	Master Fixed Allocation Setting 3 Switch	OFF→ ON	User	Functions the same as bit 08 to allocate the following words. (The Unit automatically restarts.) • OUT area: CIO 3600 to CIO 3663 (1 word/1 node address) • IN area: CIO 3700 to CIO 3763 (1 word/1 node address)	Program mode	Enabled	Disabled	
		OFF	Unit	Returns to OFF after the fixed allocation areas are set.				

Bit	Name	Status	Controlled by	Unit operation	Operation conditions			Default setting
					CPU Unit operating mode	Master function	Scan list status	
11	Master User-set Allocations Switch	OFF→ ON	User	Reads setup data from the Master User Allocations Setup Table (words m+1 to m+7) in the DM Area and registers the scan list. (The Unit automatically restarts.) Once registered, the Unit will operate with master user-set allocations regardless of whether the power is turned OFF and back ON again until the scan list is cleared.	Program mode	Enabled	---	Master Fixed Allocation Setting 1 enabled
		OFF	Unit	Returns to OFF when the scan list is registered and the Unit starts operating with the scan list enabled. **Note** If there is a setting error, an error code will be stored in the Master User Allocations Setup Table (words m+1 to m+7) and the Scan List Register/Clear Failed Flag (word n+12, bit 11) will turn ON.				
12	Temporary Setting Switch for Communications Cycle Time	OFF→ ON	User	Reads setup data from the Communications Cycle Time Setup Table (word m) in the DM Area and temporarily changes the cycle time. The settings are not stored in non-volatile memory in the Unit and will not be valid again if the power is turned OFF and back ON or if the Unit is restarted. Use this to temporarily extend the communications cycle time with a ladder program to place priority on message communication. **Note** The cycle time can be changed in any CPU Unit operating mode.	---	---	---	None
		OFF	Unit	Returns to OFF after the communications cycle time is changed. The Communications Cycle Time Reference Table (words m+15 to m+18) will be cleared before the switch returns to OFF if the change was successfully completed. **Note** The Communications Cycle Time Setting Failed Flag (word n+12, bit 12) turns ON if there is a setting error, and the Communications Cycle Time Reference Table (words m+15 to m +18) will not be cleared.				
13	Communications Cycle Time Setting Switch	OFF→ ON	User	Reads setup data from the communications cycle time setup table (word m) in the DM area to change the communications cycle time, and to store the communications cycle time in non-volatile memory in the Unit. The settings will therefore be valid again if the power is turned OFF and back ON or if the Unit is restarted.	Program mode	---	---	None
		OFF	Unit	Returns to OFF after the communications cycle time is changed. The Communications Cycle Time Reference Table (words m+15 to m+18) will clear before the switch returns to OFF if the change was successfully completed. **Note** The Communications Cycle Time Setting Failed Flag (word n+12 bit 12) will turn ON if there is a setting error. In that case, the Communications Cycle Time Reference Table (words m+15 to m +18) will not be cleared.				

Bit	Name	Status	Controlled by	Unit operation	Operation conditions			Default setting
					CPU Unit operating mode	Master function	Scan list status	
14	Communications Cycle Time Reference Table Clear Switch	OFF→ ON	User	Clears data in the Communications Cycle Time Reference Table (words m+15 to m+18). The data that is cleared will be updated with new data.	---	---	---	None
		OFF	Unit	Returns to OFF after the data in the Communications Cycle Time Reference Table (words m+15 to m+18) has been cleared.				

3-2-2 Software Switches 2 (Word n+1)

All switches are turned ON by the user. The Unit automatically turns them OFF after the function is executed. Once a function is set by turning a switch ON (except for the switches listed below), it is saved regardless of whether the power is turned OFF and back ON again.

- Slave COS Send Switch (bit 12)
- Unit Setup File Restore Switch (bit 14)
- Unit Setup File Backup Switch (bit 15)

If multiple bits are turned ON simultaneously, the requests will generate errors but they will not alter Unit operation. The corresponding error bits in the following words will turn ON if a request made by a software switch ends in an error.

- Slave Status 1

Word n+1 [n = CIO 1,500 + (25 x unit number)]

Bit	Name	Status	Controlled by	Unit operation	Operation conditions		Default setting
					CPU Unit operating mode	Slave function	
00 to 05	Reserved by system	---	---	---	---	---	---

Bit	Name	Status	Controlled by	Unit operation	Operation conditions		Default setting
					CPU Unit operating mode	Slave function	
06	Slave Enable Switch	OFF→ ON	User	Enables slave communications. (The Unit automatically restarts.) To use fixed allocations, turn this switch ON after turning ON a Slave Fixed Allocation Setting Switch (word n+1, bits 08 to 10). To used user-set allocations, turn this switch ON after turning ON the User Setting Switch (word n+1, bit 11). Once enabled, the Unit will function as a slave regardless of whether the power is turned OFF and back ON again until the Slave Stop Switch (word n+1, bit 07) is turned ON. **Note** 1. Slave communications are enabled in the default setting. 2. If this bit is turned ON with Slave enabled, a Unit status error will occur and a C2 error will be displayed on the 7-segment display. The 7-segment display will go out automatically after 30 seconds.	Program mode	Disabled	Slave disabled
		OFF	Unit	Returns to OFF at the start of slave communications.			
07	Slave Stop Switch	OFF→ ON	User	Stops slave communications. (The Unit automatically restarts.) Turn this switch ON if the Unit will be used only for master communications.	Program mode	Disabled	Slave disabled
		OFF	Unit	Returns to OFF after slave communications stop.			
08	Slave Fixed Allocation Setting 1 Switch	OFF→ ON	User	Allocates the following words to the slave. • OUT 1 area (input to the CPU Unit): CIO 3370 (1 word allocated) • IN 1 area (output from the CPU Unit): CIO 3270 (1 word allocated) • OUT 2 area: Not used • IN 2 area: Not used **Note** 1. Slave communications must be disabled before this switch is turned ON. After the switch is turned ON, turn the Slave Enable Switch (word n+1, bit 06) ON to enable Fixed Allocation Setting 1. 2. This is the default setting for the Unit. 3. The words allocated by this switch are used as the I/O area for the slave. (Use the Slave Enable Switch (word n+1, bit 06).)	Program mode	Enabled	Slave Fixed Allocation setting 1 enabled
		OFF	Unit	Returns to OFF after fixed allocations have been set.			
09	Slave Fixed Allocation Setting 2 Switch	OFF→ ON	User	Allocates the following words to the slave. • OUT 1 area (input to the CPU Unit): CIO 3570 (1 word allocated) • IN 1 area (output from the CPU Unit): CIO 3470 (1 word allocated) • OUT 2 area: Not used • IN 2 area: Not used **Note** Same as notes 1 to 3 for bit 08.	Program mode	Disabled	
		OFF	Unit	Returns to OFF after fixed allocations have been set.			

Bit	Name	Status	Controlled by	Unit operation	Operation conditions		Default setting
					CPU Unit operating mode	Slave function	
10	Slave Fixed Allocation setting 3 switch	OFF→ ON	User	Allocates the following words to the slave. • OUT 1 area (input to the CPU Unit): CIO 3770 (1 word allocated) • IN 1 area (output from the CPU Unit): CIO 3670 (1 word allocated) • OUT 2 area: Not used • IN 2 area: Not used **Note** Same as notes 1 to 3 for bit 08.	Program mode	Disabled	Slave Fixed Allocation setting 1 enabled
		OFF	Unit	Returns to OFF after fixed allocations have been set.			
11	Slave User Allocations Switch	OFF→ ON	User	Reads setup data from the Slave User Allocations Setup Table in the DM Area and registers slave user-set allocations. Once registered, the Unit will operate with slave user-set allocations regardless of whether the power is turned OFF and back ON again until slave communications are disabled (i.e., until Slave Disable Switch (word n+1, bit 07) is turned ON). Slave communications must be disabled before this switch is turned ON. **Note** After the switch is turned ON, turn the Slave Enable Switch (word n+1, bit 06) ON to enable user-set allocations.	Program mode	Disabled	Slave Fixed Allocation setting 1 enabled
		OFF	Unit	Returns to OFF at the start of operation for slave user-set allocations. **Note** The Slave Function Enable/Stop Failed Flag (word n+14, bit 08) in Unit Status 2 will turn ON if there is a setting error.			
12	Slave COS Send Switch	OFF→ ON	User	Sends COS IN data to the master.	---	---	None
		OFF	Unit	Returns to OFF after transmission is completed regardless of whether it was completed normally or in error.			
13	Reserved by system	---	---	---	---	---	---

Bit	Name	Status	Controlled by	Unit operation	Operation conditions				Default setting
					CPU Unit operating mode	Master function	Scan list status	Slave function	
14	Unit Setup File Restore Switch	OFF→ ON	User	Reads Unit settings (scan list, communications cycle time settings, etc.) from the file on a Memory Card in the CPU Unit and writes the data as Unit settings. See *7-2 Memory Card Backup Functions* for details. (The Unit automatically restarts.) **Note** After the file data is read, the Unit automatically restarts with the new data.	Program mode	---	---	---	None
		OFF	Unit	Returns to OFF when the Unit restarts if the data is read properly. **Note** The File Read/Write Error Flag (word n+11, bit 08) in Unit Status 2 will turn ON if there is a setup data error or a file read error.					
15	Unit Setup File Backup Switch	OFF→ ON	User	Writes user settings (scan list, communications cycle time settings, etc.) as a file on the Memory Card in the CPU Unit. See *7-2 Memory Card Backup Functions* for details. **Note** Files can only be backed up with the scan list enabled.	---	---	Enabled (See note 1.)	---	None
		OFF	Unit	Returns to OFF after the data is written to a file. **Note** The File Read/Write Error Flag (word n+11, bit 08) in Unit Status 2 will turn ON if data failed to be written to file.					

Note 1. When the Master function is enabled, the Unit Setup File cannot be backed up unless the scan list is enabled.

3-2-3 Master COS Send Switches (Words n+2 to n+5)

One Master COS Send Switch is allocated to each slave node address. If the switch for a slave is turned ON, then COS output data will be sent to that slave.

	Bit15	Bit14	Bit13	Bit12	Bit11	Bit10	Bit09	Bit08	Bit07	Bit06	Bit05	Bit04	Bit03	Bit02	Bit01	Bit00
n+2	15	14	13	12	11	10	09	08	07	06	05	04	03	02	01	00
n+3	31	30	29	28	27	26	25	24	23	22	21	20	19	18	17	16
n+4	47	46	45	44	43	42	41	40	39	38	37	36	35	34	33	32
n+5	63	62	61	60	59	58	57	56	55	54	53	52	51	50	49	48

More than one of these switches may be turned ON at the same time. The switches will return to OFF starting at the switches for the slaves to which COS data has been sent.

If a send error occurs, the corresponding bit will turn ON in Slave Detailed Status.

3-2-4 Disconnect/Connect Switches (Words n+6 to n+9)

One Disconnect/Connect Switch is allocated to each slave node address. If the switch for a slave is turned ON, then remote I/O communications to that slave will be temporarily stopped (i.e., it is disconnected from the network). A communications error will occur at the end for any slave has been disconnected if the corresponding switch is turned ON during communications.

These switches are used primarily to replace slaves or to reserve a place for a slave that will be added (when a Unit is registered in the scan list but not yet connected). A communications error and verification error for the slave that has been disconnected will not be generated at the master as long as the corresponding switch is ON.

Note These switches do not add or remove slaves from the registered scan list.

	Bit15	Bit14	Bit13	Bit12	Bit11	Bit10	Bit09	Bit08	Bit07	Bit06	Bit05	Bit04	Bit03	Bit02	Bit01	Bit00
n+6	15	14	13	12	11	10	09	08	07	06	05	04	03	02	01	00
n+7	31	30	29	28	27	26	25	24	23	22	21	20	19	18	17	16
n+8	47	46	45	44	43	42	41	40	39	38	37	36	35	34	33	32
n+9	63	62	61	60	59	58	57	56	55	54	53	52	51	50	49	48

Remote I/O communications will restart if a user turns OFF a bit that is ON.

More than one of these switches may be turned ON at the same time. If the switch for a slave that is not using remote I/O communications is turned ON, it will be ignored.

A Unit that has been disconnected can still perform message communications.

Turning ON this bit does not effect the communications cycle time (except that it increases blank time in the communications cycle).

Note All Disconnect/Connect Switches are cleared and return to OFF when the power is turned OFF. If required, write the ladder program to turn them back ON when the power is turned ON.

Bit	Name	Status	Controlled by	Unit operation
–	Disconnect/ Connect Switch	ON	User	Stops remote I/O communications for the corresponding Slave.
		OFF	User	Starts remote I/O communications for the corresponding Slave.

3-2-5 Unit Status 1 (Word n+10)

Word n+10 [n = CIO 1,500 + (25 x unit number)]

Bit	Name	Status	Controlled by	Unit operation
00	Unit Error Flag	ON	Unit	Displays DeviceNet Unit operating errors. This bit turns ON if any bit from 01 to 15 in Unit Status 1 turns ON. (OR of bits 01 to 15) Usage example: When writing the ladder program for remote I/O communications, set a NC input conditions for this bit to control Slave I/O processing.
		OFF	Unit	Indicates that the an error has not occurred or turns OFF when the error has cleared.
01	Master Function Error Flag	ON	Unit	Indicates that a master error has occurred. (Master Status 1 (See word n+12.)) The master errors are as follows: • Verification Error Flag (word n+12, bit 00) • Structure Error Flag (word n+12, bit 01) • Remote I/O Communications Error Flag (word n+12, bit 02) • Invalid Scan List Data Flag (word n+12, bit 04) • Remote I/O Refresh Error Flag (word n+12, bit 05)
		OFF	Unit	Indicates that the error has not occurred or turns OFF when the error has been cleared.
02	Reserved by system	---	---	---
03	Slave Function Error Flag	ON	Unit	Indicates that a slave error has occurred. (Slave Status 1 (See word n+14.)) The slave errors are as follows: • Remote I/O Communications Error Flag for OUT 1/ IN 1 (word n+14, bit 02) • Remote I/O Communications Error Flag for OUT 2/ IN 2 (word n+14, bit 03) • Invalid Setup Data Flag (word n+14, bit 04) • Remote I/O Refresh Error Flag (word n+14, bit 05)
		OFF	Unit	Indicates that the error has not occurred or turns OFF when the error has been cleared.
04	Unit Memory Error Flag	ON	Unit	Indicates an error in internal memory where the error history is stored. (The error occurs when the Unit starts up or when the error history is written.)
		OFF	Unit	Indicates that the error has not occurred. Once this error has occurred, the bit will remain ON and will not return to OFF.
05	Bus Off Flag	ON	Unit	Indicates that a Bus OFF error (communications were stopped by multiple transmissions) has occurred. When a Bus OFF occurs, the Unit goes offline and all communications stop (remote I/O communications stop, slave operation stop, and message communications are disabled).
		OFF	Unit	Indicates that the error has not occurred. Once this error has occurred, the bit will remain ON and will not return to OFF.
06	Node Address Duplicated Flag	ON	Unit	Indicates a duplicate node address check error when the Unit starts up. The Unit goes offline and all communications stop. (Remote I/O communications stop, slave operation stop, and message communications are disabled.)
		OFF	Unit	Indicates that the error has not occurred. Once this error has occurred, the bit will remain ON and will not return to OFF.

Bit	Name	Status	Controlled by	Unit operation
07	Network Power Error Flag	ON	Unit	Indicates that there is no power from the network power supply. **Note** Remote I/O communications stop if DIP switch pin 3 (remote I/O communications stop/continue setting for a communications error) on the front panel is ON (stop).
		OFF	Unit	Indicates that the error has not occurred or turns OFF when the network power supply has restarted.
08	Send Time-out Flag	ON	Unit	Indicates that a send timeout occurred due to one of the following factors: • No slaves present. • Mismatched baud rate settings. **Note** Remote I/O communications stop if DIP switch pin 3 (remote I/O communications stop/continue setting for a communications error) on the front panel is ON (stop).
		OFF	Unit	Returns to OFF at the start of communications even with just one slave present.
09 to 11	Reserved by system	---	---	---
12	Routing Table Error Flag	ON	Unit	Incorrect data in the routing tables set in the CPU Unit. Refer to *1-6-3 Creating Routing Tables*.
		OFF	Unit	Indicates that the error has not occurred if a routing table has been set.
13	Invalid Message Timer List Flag	ON	Unit	Indicates that the data in the message monitoring timer list is not correct.
		OFF	Unit	Indicates that the data in the message monitoring timer list is correct. Turns OFF if the Configurator registers a message monitoring timer list when the error occurs. The message monitoring timer list shows the time spent waiting for responses in message communications. It is set from the Configurator.
14 to 15	Reserved by system	---	---	---

3-2-6 Unit Status 2 (Word n+11)

Word n+11 [n = CIO 1,500 + (25 x unit number)]

Bit	Name	Status	Controlled by	Unit operation
00	Online Flag	ON	Unit	Indicates that the Unit is online. The Unit normally goes online automatically. **Note** When executing message communications instructions (SEND/RECV/CMND) from the ladder program, use an AND of input conditions for the Network Communications Enabled Flag in the CPU Unit (A20200 to A20207) and this bit.
		OFF	Unit	Indicates that the Unit is offline. A Unit will go offline under the following conditions: • Operation is stopped by the hardware/software check at startup. • An error occurred in the duplicate node address check (word n+10, bit 06). • A Bus OFF error has occurred (word n+10, bit 05).

Bit	Name	Status	Controlled by	Unit operation
01	Remote I/O Communications Flag	ON	Unit	Indicates that remote I/O communications are being performed for the master function. Normally, the Unit will perform remote I/O communications automatically. **Note** This bit only indicates the start of remote I/O communications, and does not indicate whether data has actually been exchanged with slaves. Actual data exchange between one or more slaves is monitored from I/O Data Communications Flag (word n+12 bit 15). Therefore use I/O Data Communications Flag rather than this bit as the input condition in I/O processing for slaves from the ladder program.
		OFF	Unit	Indicates remote I/O communications have stopped. This bit turns OFF in order to stop communications under the following conditions: • No slaves are registered in the scan list. • Invalid Setup Data Flag (word n+12, bit 04) • A remote I/O communications error or sending error (network power error or send timeout error) occurred with DIP switch pin 3 (remote I/O communications stop/continue setting for communications errors) on the front panel turned ON. • The remote I/O Communications Stop Switch (word n, bit 04) is ON.
02	Reserved by system	---	---	---
03	Master Function Enabled Flag	ON	Unit	Indicates that master communications are enabled (Unit is operating as a Master) (default setting).
		OFF	Unit	Indicates that master communications are disabled.
04	Scan List Disabled Flag	ON	Unit	Indicates that the Unit is operating with the scan list disabled (default setting).
		OFF	Unit	Indicates that the Unit is operating with the scan list enabled.
05	Reserved by system	---	---	---
06	Automatic Slave Connection Flag	ON	Unit	Indicates that the connection type was automatically set in the slave scan list. This flag is valid only with slave communications enabled.
		OFF	Unit	Indicates that the connection type was set from the Configurator in the slave scan list. **Note** The type of connection in slave communications cannot be specified without the Configurator. If it is not set from the Configurator, it will be set automatically.
07	Slave Function Enabled Flag	ON	Unit	Indicates that slave communications are enabled.
		OFF	Unit	Indicates that slave communications are disabled (default setting).
08	File Read/ Write Error Flag	ON	Unit	Indicates that an error has occurred when user setup data is read from a Memory Card in the CPU Unit or when data is written as a file to a Memory Card.
		OFF	Unit	Indicates that the error has not occurred. Turns OFF when the Unit has successfully completed the operation.
09 to 14	Reserved by system	---	---	---
15	Error History Flag	ON	Unit	Indicates that an error history has been registered. Turns ON at the first error history for the Unit.
		OFF	Unit	Indicates that no errors have been registered in the error history. Turns OFF when the Unit receives an error history clear request.

3-2-7 Master Status 1 (Word n+12)

Word n+12 [n = CIO 1,500 + (25 x unit number)]

Bit	Name	Status	Controlled by	Unit operation
00	Verification Error Flag	ON	Unit	Indicates that the data in the slave registered in the scan list is different from the data from the actual slave. It occurs with the scan list enabled.
		OFF	Unit	Indicates that a verification error has not occurred or turns OFF when a verification error is cleared.
01	Structure Error Flag	ON	Unit	Indicates that I/O allocations cannot be made with the scan list disabled.
		OFF	Unit	Indicates that a structure error has not occurred or turns OFF when a structure error is cleared.
02	Remote I/O Communications Error Flag	ON	Unit	Indicates that a remote I/O communications timeout has occurred during remote I/O communications with slaves. Remote I/O communications will stop if DIP switch pin 3 (remote I/O communications stop/continue setting for communications errors) on the front panel is ON (stop). This error occurs with the scan list enabled or disabled.
		OFF	Unit	Indicates that a remote I/O communications error has not occurred or turns OFF when a remote I/O communications error is cleared.
03	Reserved by system	---	---	---
04	Invalid Scan List Data Flag	ON	Unit	Indicates that there is incorrect data in the scan list (mismatched checksum). Remote I/O communications in the Unit will stop. (Slave operations and message communications will continue.)
		OFF	Unit	Indicates that the scan list data is correct. Turns OFF when an incorrect scan list data error occurs and then the correct scan list is registered.
05	Remote I/O Refresh Error Flag	ON	Unit	Indicates that the I/O memory in the CPU Unit that is to be refreshed is not present during I/O refreshing for the master. It occurs in several situations, such as when an I/O area is allocated in an EM bank that is not present.
		OFF	Unit	Indicates that no master I/O refresh errors have occurred.
06 to 07	Reserved by system	---	---	---
08	Master Function Enable/ Disable Failed Flag	ON	Unit	Indicates that an error has occurred in one of the following operations: • Master enable (word n, bit 06) • Master stop (word n, bit 07) Once this bit turns ON, it will remain ON until the operation is successfully completed.
		OFF	Unit	Indicates that the error has not occurred. The bit turns OFF when the operation is successfully completed.
09	User Allocation Area Setting Failed Flag	ON	Unit	Indicates that an error has occurred in one of the following operations: • Master user-set allocations user setting (word n, bit 11) Once this bit turns ON, it will remain ON until the operation is successfully completed. Details on the master user-set allocation results are output to the Master User Allocations Setup Table.
		OFF	Unit	Indicates that the error has not occurred. The bit turns OFF when the operation is successfully completed.

Bit	Name	Status	Controlled by	Unit operation
10	Fixed Allocation Area Setting Failed Flag	ON	Unit	Indicates that an error has occurred in one of the following operations: • Fixed Allocation Setting 1 (word n, bit 08) • Fixed Allocation Setting 2 (word n, bit 09) • Fixed Allocation Setting 3 (word n, bit 10) Once this bit turns ON, it will remain ON until the operation is successfully completed.
		OFF	Unit	Indicates that the error has not occurred. The bit turns OFF when the operation is successfully completed.
11	Scan List Register/ Clear Failed Flag	ON	Unit	Indicates that an error has occurred in one of the following operations: • Scan list enabled (word n, bit 00) • Scan list clear (word n, bit 01) Once this bit turns ON, it will remain ON until the operation is successfully completed.
		OFF	Unit	Indicates that the error has not occurred. The bit turns OFF when the operation is successfully completed.
12	Communications Cycle Time Setting Failed Flag	ON	Unit	Indicates that an error has occurred when setting the communications cycle time (word n, bit 12). Once this bit turns ON, it will remain ON until the next communications cycle time is set.
		OFF	Unit	Indicates that the error has not occurred. The bit turns OFF when the operation is successfully completed.
13 to 14	Reserved by system	---	---	---
15	I/O Data Communications Flag	ON	Unit	Indicates that at least one slave is performing remote I/O communications. Usage example: When writing the ladder program for remote I/O communications, set a NO input condition for this bit to control slave I/O processing.
		OFF	Unit	Indicates that remote I/O communications are not being conducted with any slaves.

3-2-8 Master Status 2 (Word n+13)

The leftmost eight bits indicate the status of master I/O allocations.

Word	Bit 15 … Bit 08	Bit 07 … Bit 00
n+13	Master I/O Allocation Status	Reserved by system

Master I/O Allocation Status

Code	Details
00 Hex	Unit starting up
01 Hex	Fixed allocation status 1 (with the scan list disabled)
02 Hex	Fixed allocation status 2 (with the scan list disabled)
03 Hex	Fixed allocation status 3 (with the scan list disabled)
11 Hex	Fixed allocation status 1
12 Hex	Fixed allocation status 2
13 Hex	Fixed allocation status 3
20 Hex	User-set allocations in the allocated DM Area words
30 Hex	User-set allocations from the Configurator
80 Hex	Master function disabled

3-2-9 Slave Status 1 (Word n+14)

Word n+14 [n = CIO 1,500 + (25 x unit number)]

Bit	Name	Status	Controlled by	Unit operation
00 to 01	Reserved by system	---	---	---
02	Remote I/O Communications Error Flag for OUT 1/ IN 1	ON	Unit	Indicates that a communications error has occurred in the OUT 1/IN 1 slave I/O connection.
		OFF	Unit	Indicates that a remote I/O communications error has not occurred or turns OFF when a remote I/O communications error is cleared.
03	Remote I/O Communications Error Flag for OUT 2/ IN 2	ON	Unit	Indicates that a communications error has occurred in the OUT 2/IN 2 Slave I/O connection.
		OFF	Unit	Indicates that a remote I/O communications error has not occurred or turns OFF when a remote I/O communications error is cleared.
04	Invalid Setup Data Flag	ON	Unit	Indicates that there is incorrect data in slave settings (mismatched checksum). The Unit stops slave communications. (Remote I/O communications and message communications continue.)
		OFF	Unit	Indicates that a Unit is operating with the correct slave setup data or without slave communications being set. Turns OFF when the slave is properly set after a slave setup data error occurs.
05	Remote I/O Refresh Error	ON	Unit	Indicates that the I/O memory in the CPU Unit that is to be refreshed is not present during I/O refreshing for the slave function. It occurs in several situations, such as when an I/O area is allocated in a EM bank that is not present.
		OFF	Unit	Indicates that a slave I/O refresh error has not occurred.
06 to 07	Reserved by system	---	---	---
08	Slave Function Enable/ Disable Failed Flag	ON	Unit	Indicates that an error has occurred in one of the following operations: • Slave function enabled (word n+1, bit 06) • Slave function disabled (word n+1, bit 07) Once this bit turns ON, it will remain ON until the operation is successfully completed.
		OFF	Unit	Indicates that the error has not occurred. The bit turns OFF when the operation is successfully completed.
09	User Allocation Area Setting Failed Flag	ON	Unit	Indicates that an error has occurred in the following operation: • Slave user-set allocations user setting (word n+1, bit 11) Once this bit turns ON, it will remain ON until the operation is successfully completed.
		OFF	Unit	Indicates that the error has not occurred. The bit turns OFF when the operation is successfully completed.
10	Fixed Allocation Area Setting Failed Flag	ON	Unit	Indicates that an error has occurred in one of the following operations: • Slave Fixed Allocation Setting 1 (word n+1, bit 08) • Slave Fixed Allocation Setting 2 (word n+1, bit 09) • Slave Fixed Allocation Setting 3 (word n+1, bit 10) Once this bit turns ON, it will remain ON until the operation is successfully completed.
		OFF	Unit	Indicates that the error has not occurred. The bit turns OFF when the operation is successfully completed.

Bit	Name	Status	Controlled by	Unit operation
11	COS Send Failed Flag	ON	Unit	Indicates that an attempt was made to send COS to a Master using the Slave COS send switch (Slave COS Send Switch in n+1) in Software Switches 2, but the transmission failed. The following may cause the failure of COS signal transmission. • A COS connection was not established with a master. • Bus OFF error occurred. • A network power error occurred. • A send timeout occurred. Once this bit turns ON, it will remain ON until the operation is successfully completed.
		OFF	Unit	Indicates that the error has not occurred. The bit turns OFF when COS is successfully sent.
12	Connection 2 Established Flag	ON	Unit	Indicates that an I/O connection has been established for OUT 2/IN 2. This bit turns ON even if valid I/O data has not been exchanged.
		OFF	Unit	Indicates that an I/O connection has not been established for OUT 2/IN 2.
13	Connection 1 Established Flag	ON	Unit	Indicates that an I/O connection has been established for OUT 1/IN 1. This bit turns ON even if valid I/O data has not been exchanged.
		OFF	Unit	Indicates that an I/O connection has not been established for OUT 1/IN 1.
14	Remote I/O Communications Flag for OUT 2/IN 2	ON	Unit	Indicates that an I/O connection has been established for OUT 2/IN 2 and the slave is conducting normal remote I/O communications with the master.
		OFF	Unit	Indicates that an I/O connection has been established for OUT 2/IN 2 and the slave is not conducting normal remote I/O communications with the master. Usage example: When writing the ladder program for slave remote I/O communications, used a NO input conditions for this bit to control I/O processing with the master.
15	Remote I/O Communications Flag for OUT 1/IN 1	ON	Unit	Indicates that an I/O connection has been established for OUT 1/IN 1 and the Slave is conducting normal remote I/O communications with the Master.
		OFF	Unit	Indicates that an I/O connection has been established for OUT 1/IN 1 and the slave is not conducting normal remote I/O communications with the master. Usage example: When writing the ladder program for slave remote I/O communications, used a NO input conditions for this bit to control I/O processing with the master.

3-2-10 Slave Status 2 (Word n+15)

Word	Bit 15 … Bit 08	Bit 07 … Bit 00
n+15	Slave I/O Allocation Status	Master Node Address

Master Node Addresses

This indicates the node address of the remote master for slave communications.

Name	Range	Details
Master Node Address	0000 to 003F Hex (0 to 63)	This information is valid when the Remote I/O Communications Flag (word n+14, bit 14 or 15) is ON in Slave Status 1.

Slave I/O Allocation Status

This indicates the I/O allocation status of the slave.

Code	Details
00 Hex	Unit starting up
01 Hex	Fixed Allocation Setting 1
02 Hex	Fixed Allocation Setting 2
03 Hex	Fixed Allocation Setting 3
20 Hex	User-set allocations using allocated DM Area words
30 Hex	Set from the Configurator
80 Hex	Slave function disabled

3-2-11 Registered Slave Table (Words n+16 to n+19)

This table indicates the slaves that are registered in the master scan list. The bits correspond to node addresses. This table is updated when the Unit starts up and when a scan list is registered.

	Bit15	Bit14	Bit13	Bit12	Bit11	Bit10	Bit09	Bit08	Bit07	Bit06	Bit05	Bit04	Bit03	Bit02	Bit01	Bit00
n+16	15	14	13	12	11	10	09	08	07	06	05	04	03	02	01	00
n+17	31	30	29	28	27	26	25	24	23	22	21	20	19	18	17	16
n+18	47	46	45	44	43	42	41	40	39	38	37	36	35	34	33	32
n+19	63	62	61	60	59	58	57	56	55	54	53	52	51	50	49	48

Operation with the Scan List Disabled

This table indicates the slaves to which a connection has been established at least once. When registering a scan list using the Scan List Enable Switch (word n, bit 00), the bits corresponding to the slaves that are registered are turned ON in this table.

Operation with the Scan List Enabled

This table indicates the slaves that have been registered in the scan list.

Bit	Name	Status	Controlled by	Unit operation
–	Slave Registered Flags	ON	Unit	With the scan list disabled: Indicates slaves to which a connection has been established at least once. With the scan list enabled: Indicates that a slave has been registered in the scan list.
		OFF	Unit	Indicates that a slave has not been registered in the scan list.

3-2-12 Normal Slave Table (Words n+20 to n+23)

This table indicates the slaves that are communicating normally with the master. The bits correspond to node addresses. The bits for slaves for which normal I/O connections have been made are turned ON in this table. If a connection cannot be established, e.g., due to a network error, the bit for the corresponding slave will be OFF. These are not flags to show the remote I/O communications status.

	Bit15	Bit14	Bit13	Bit12	Bit11	Bit10	Bit09	Bit08	Bit07	Bit06	Bit05	Bit04	Bit03	Bit02	Bit01	Bit00
n+20	15	14	13	12	11	10	09	08	07	06	05	04	03	02	01	00
n+21	31	30	29	28	27	26	25	24	23	22	21	20	19	18	17	16
n+22	47	46	45	44	43	42	41	40	39	38	37	36	35	34	33	32
n+23	63	62	61	60	59	58	57	56	55	54	53	52	51	50	49	48

This table is updated continuously.

Bit	Name	Status	Controlled by	Unit operation
–	Slave Normal Flags	ON	Unit	Indicates normal connection.
		OFF	Unit	Indicates that not all connections have been made.

All bits will be OFF if a communications power supply error occurs, if there is a send timeout, or if remote I/O communications stop (including when remote I/O communications stop for a communications error).

3-2-13 C200H Master Replacement Master Status 1 (Word n+24)

To simplify changes to ladder programs for a C200H DeviceNet Master Unit (C200HW-DRM21-V1), Master Replacement Status 1, which has the same bit configuration as Master Status Area 1, is provided for C200H DeviceNet Master Units.

Word n+24 [n = CIO 1,500 + (25 x unit number)]

Bit	Name	Status	Controlled by	C200HW-DRM21-V1 status	Details and CS1W-DRM21(-V1) status
00	Unit Memory Error Flag	ON/OFF	Unit	Switch Setting Error or EEPROM Error Flag	This is the same as a Unit memory error (word n+10, bit 04). **Note** This bit is also used for incorrect switch settings for the C200HW-DRM21-V1. The Unit will not start if the switch settings are incorrect.
01	Node Address Duplicated/ Bus Off Flag	ON/OFF	Unit	Node Address Duplicated/ Bus Off Flag	This bit turns ON if any one of the following flags turns ON: • Node Address Duplicated Flag (word n+10, bit 06) • Bus Off Flag (word n+10, bit 05)
02	Reserved by system	---	---	Reserved by system	Reserved by system
03	Configuration Error Flag	ON/OFF	Unit	Configuration Error Flag	This bit turns ON if any of the following flags turn ON: • Routing Table Error Flag (word n+10, bit 12) • Invalid Message Timer List Flag (word n+10, bit 13) • Invalid Scan List Data Flag (word n+12, bit 04) • Remote I/O Refresh Error Flag (word n+12, bit 05) **Note** The C200HW-DRM21-V1 does not support slave communications. Scan list data errors for slave communications are not relevant.
04	Structure Error Flag	ON/OFF	Unit	Structure Error Flag	This is the same as the Structure Error Flag in word n+12, bit 01.

Bit	Name	Status	Controlled by	C200HW-DRM21-V1 status	Details and CS1W-DRM21(-V1) status
05	Send Error Flag	ON/OFF	Unit	Send Error Flag	This bit turns ON if any one of the following bits turns ON: • Network Power Error Flag (word n+10, bit 07) • Send Timeout Flag (word n+10, bit 08)
06	Communications Error Flag	ON/OFF	Unit	Communications Error Flag	This is the same as the Remote I/O Communications Flag (word n+12, bit 02).
07	Verification Error Flag	ON/OFF	Unit	Verification Error Flag	This is the same as the Verification Error Flag in word n+12, bit 00.
08	I/O Data Communications Not Running Flag	ON/OFF	Unit	I/O Data Communications Not Running Flag	This operates in the reverse way of the Remote I/O Communications Flag (word n+11 bit 01).
09	Reserved by system	---	---	Scan List Operation Completed Flag	---
10	Reserved by system	---	---	Scan List Operation Error Flag	---
11	Reserved by system	---	---	Communications Error Stop Cleared Flag	---
12	Message Communications Permitted Flag	ON/OFF	Unit	Message Communications Permitted Flag	The same as the Online Flag in word n+11, bit 00. **Note** When executing message communications instructions (SEND/RECV/CMND) from the ladder program, use an AND of input conditions for the Network Communications Enabled Flag in the CPU Unit (A20200 to A20207) and this bit.
13	Invalid Scan List Data Flag	ON/OFF	Unit	Invalid Scan List Data Flag	The same operation as the Invalid Scan List Data Flag (word n+11, bit 04).
14	Error Flag	ON/OFF	Unit	Error Flag	This bit turns ON if bit 00, 01 or 03 to 07 in this word (n+24) turns ON.
15	Remote I/O Communications Flag	ON/OFF	Unit	Remote I/O Communications Flag	The same as I/O Data Communications Flag (word n+12 bit 15).

Note Although the bit configurations are the same, the word addresses are different (because this is a CS/CJ-series CPU Bus Unit). Change the words using a replacement operation from the Programming Device.

3-3 Allocated DM Area Words

Data is stored at the offset positions shown in the figure below starting from the first word allocated to the Unit in the DM Area.

The first word can be calculated as follows from the unit number setting:

First word m = D30000 + (25 x unit number)

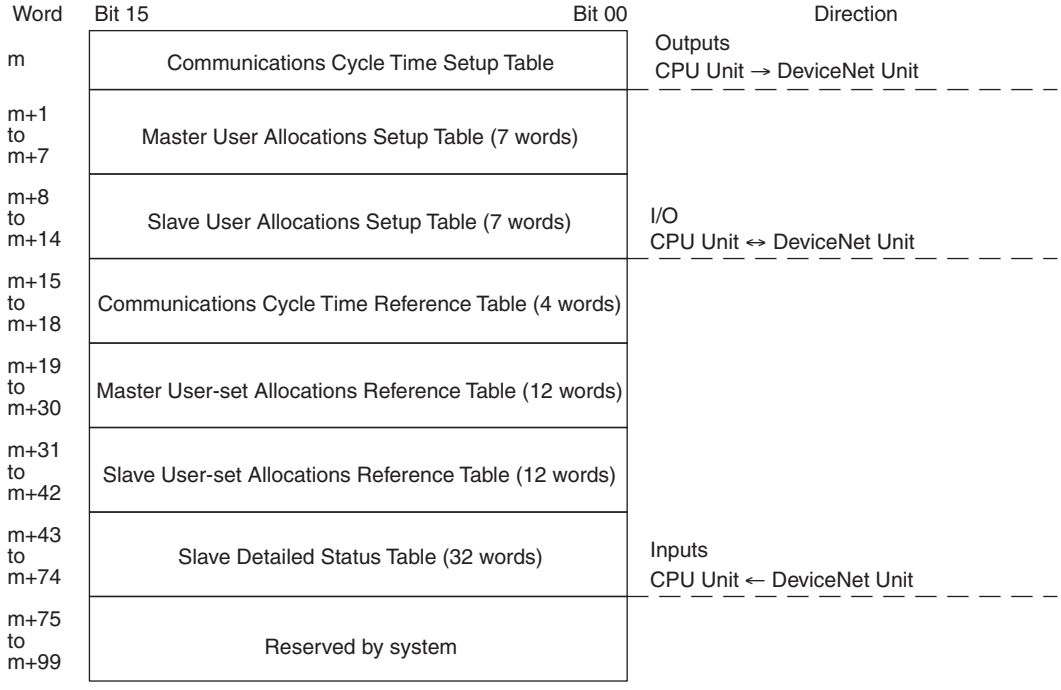

3-3-1 Communications Cycle Time Setup Table

This table sets the communications cycle time for the master.

The standard communications cycle time can be updated with these switches.

Temporary Setting Switch for Communications Cycle Time	Word n, bit 12	Returns to the previous setting when the power is turned OFF or the Unit is restarted.
Communications Cycle Time Reference Table Clear Switch	Word n, bit 13	Also effective the next time the Unit is started, because the set value is stored in non-volatile memory.

Word	Bit 15	Bit 00
m	Communications cycle time setting (ms)	

Name	Range	Details
Communications Cycle Time Setting	0000 to 01F4 Hex (0 to 500)	Sets the communications cycle time in milliseconds. Setting range: 0 to 500 ms If this bit is set to 0, the optimum time calculated by the Unit will be used. If a value higher than 500 ms is set, then the Unit will operate at 500 ms. If the setting cannot be correctly made for some reason, the Scan List Register/Clear Failed Flag (word n+12, bit 11) in Master Status 1 and the Temporary Setting Switch for Communications Cycle Time (word n, bit 12) will be turned OFF.

Note If the setting is smaller than the optimum communications cycle time calculated by the Unit and stored internally in the Unit, then the value calculated by the Unit will be used.

3-3-2 Master User Allocations Setup Table

This table is set by the user to specify the I/O words used by the master. Only OUT block 1 and IN block 1 can be set using this table.

Word	Bit 15 … Bit 08	Bit 07 … Bit 00
m+1	Reserved by system	OUT block 1 area
m+2	First word in OUT block 1	
m+3	Reserved by system	IN block 1 area
m+4	First word in IN block 1	
m+5	Reserved by system	Allocation size setup table area
m+6	First word in the allocation size setup table	
m+7	Setting results	

Note OUT blocks 1 and 2 and IN blocks 1 and 2 can be set from the Configurator.

I/O allocations can be updated in the master by setting this table and turning ON the Master User-set Allocations Switch (word n, bit 11). The Unit will restart automatically and start operating with the scan list enabled.

Note Make sure the CPU Unit is in PROGRAM mode and the master function is enabled before you set these values.

Name	Range	Details
OUT block 1 area	See *Areas and Word Ranges*.	Specifies the OUT block area. The OUT block is not allocated when set to 00 Hex.
First word in OUT block 1		Specifies the first word for the OUT block.
IN block 1 area		Specifies the IN block area. The IN block is not allocated when set to 00 Hex.
First word in IN block 1		Specifies the first word for the IN block.
Allocation size setup table area		Specifies the area for the allocation size setup table. An area is not allocated when set to 00 Hex.
First word in the allocation size setup table (See note.)		Specifies the first word of the allocation size setup table.
Setting results	See *Setting Results*.	Gives the setting results.

Note See *Allocation Size Setup Table* (p. 87) for more details on the first word of the allocation size setup table.

Areas and Word Ranges

Code	Name	Word range
00 Hex	---	The block is not allocated.
01 Hex	CIO Area (CIO)	0000 to 17FF Hex (0 to 6143)
03 Hex	Data Memory (DM)	0000 to 7FFF Hex (0 to 32767)
04 Hex	Work Area (WR)	0000 to 01FF Hex (0 to 511)
05 Hex	Holding Relay (HR)	0000 to 01FF Hex (0 to 511)
08 to 14 Hex	Expansion Data Memory (EM) Bank 0 to bank C (13 banks)	0000 to 7FFF Hex (0 to 32767) for all banks

Setting Results

Code	Description	Details
0000 Hex	Completed normally	---
1101 Hex	No area	• Incorrect area setting. • The allocated size in the allocation size setup table is 0.
1103 Hex	Address range specification error	The first word is outside the setting range.
110C Hex	Parameter error	• The OUT or IN size in the allocation size setup table exceeds 200 bytes. • Both the OUT and IN blocks are set for no allocations. • No slaves are allocated.
1104 Hex	Address range overflow	• The block or the allocation size setup table exceeds the valid word range. • The block is larger than 1,000 bytes.
2201 Hex	Wrong operating mode	The CPU Unit is not in PROGRAM mode.
2201 Hex	Unit busy	Service cannot be executed because the Unit is busy.
2606 Hex	Cannot execute service	The Unit master communications have not been disabled.

3-3-3 Allocation Size Setup Table

The following allocation size setup tables must be set in the I/O memory in the CPU Unit to use the Master User Allocations Setup Table.

The number of bytes set in the allocation size setup table are allocated in word units in order of node addresses for OUT block 1 and then IN block 1. Set the sizes within a range from 0 to 200 bytes (100 words).

Word	Bit 15 … Bit 08	Bit 07 … Bit 00
I	Node address 0 OUT size (bytes)	Node address 0 IN size (bytes)
I+1	Node address 1 OUT size (bytes)	Node address 1 IN size (bytes)
	⋮	
I+63	Node address 63 OUT size (bytes)	Node address 63 IN size (bytes)

Setting Example

The following example shows the allocation when the size (bytes) for OUT block 1 and IN block 1 is set in the allocation size setup table using the specified values.

Node address 0: OUT size: 1 byte, IN size: 5 bytes
Node address 1: OUT size: 4 byte, IN size: 3 bytes
Node address 2: OUT size: 1 byte, IN size: 2 bytes

Allocation size setup table

l	1	5
l+1	4	3
l+2	1	2
	:	:

→

	15 OUT block 1	00
s	Not usable	00
s+1	01	01
s+2	01	01
s+3	Not usable	02
	:	:

	15 IN block 1	00
k	00	00
k+1	00	00
k+2	Not usable	00
k+3	01	01
k+4	Not usable	01
k+5	02	02
	:	:

l: First word of the allocation size setup table
s: First word of OUT block 1
k: First word of IN block 1

Note
1. The numbers in the OUT 1 and IN 1 blocks represent node addresses.
2. Bytes are allocated in order in the blocks in word units in the order of node addresses. If the allocated size is 1 byte, the rightmost byte is used, but the leftmost byte cannot be used.

3-3-4 Slave User Allocations Setup Table

The I/O areas specified here for the slave OUT 1 area, for slave IN 1 area are used if the slave function is enabled using the Slave User-set Allocations Switch (word n+1, bit 11).

Word	Bit 15 … Bit 08	Bit 07 … Bit 00
m+8	00 Hex fixed	Slave OUT 1 area
m+9	First word of the Slave OUT 1 area	
m+10	00 Hex fixed	OUT 1 area size (bytes)
m+11	00 Hex fixed	Slave IN 1 area
m+12	First word of the Slave IN 1 area	
m+13	00 Hex fixed	IN 1 area size (bytes)
m+14	Setting results	

I/O allocations for the slaves can be updated by setting this table and turning ON the Slave User-set Allocations Switch (word n+1, bit 11). The Unit restarts automatically and starts operating with the scan list enabled.

Note Make sure the CPU Unit is in PROGRAM mode and the Unit has stopped slave communications before you set these values.

Name	Range	Details
Slave OUT 1 area	See *Areas and Word Ranges*.	Specifies the OUT 1 area. The OUT 1 area is not available if this is set at 0.
First word in the Slave OUT 1 area		Specifies the first word in the OUT 1 area.
OUT 1 area size	00 to C8 Hex (0 to 200 bytes)	Specifies the size of the OUT 1 area in bytes. The OUT 1 area is not allocated when set to 00 Hex.
Slave IN 1 area	See *Areas and Word Ranges*.	Specifies the IN 1 area. The IN 1 area is not allocated when set to 00 Hex.
First word in the Slave IN 1 area		Specifies the first word in the IN 1 area.
IN 1 area size	00 to C8 Hex (0 to 200 bytes)	Specifies the size of the IN 1 area in bytes. The IN 1 area is not allocated when set to 00 Hex.
Setting results	See *Setting Results*.	Shows the setting results.

Areas and Word Ranges

Code	Name	Word range
00 Hex	CIO Area (CIO)	The area is not used.
01 Hex	Data Memory (DM)	0000 to 17FF Hex (0 to 6143)
03 Hex	Work Area (WR)	0000 to 7FFF Hex (0 to 32767)
04 Hex	Holding Relay (HR)	0000 to 01FF Hex (0 to 511)
05 Hex	Expansion Data Memory (EM)	0000 to 01FF Hex (0 to 511)
08 to 14 Hex	Bank 0 to bank C (13 banks)	0000 to 7FFF Hex (0 to 32767) for all banks

Setting Results

Code	Description	Details
0000 Hex	Completed normally	---
1101 Hex	No area	Incorrect area setting.
1103 Hex	Address range specification error	The first word is outside the setting range.
110C Hex	Parameter error	• The OUT 1 or IN 1 area size exceeds 200 bytes. • The OUT 1 and IN 1 area size is 0. • Both the OUT 1 and IN 1 blocks are set for no allocations.
1104 Hex	Address range overflow	The allocated area exceeds the valid word range.
2201 Hex	Wrong operating mode	The CPU Unit is not in PROGRAM mode.
2201 Hex	Unit busy	Service cannot be executed because the Unit is busy.
2606 Hex	Cannot execute service	The Unit slave communications have not been disabled.

3-3-5 Communications Cycle Time Reference Table

This table can be used to access the present, maximum and minimum communications cycle times. All the values in this table are cleared from the Unit and the maximum and minimum values are updated with new values when the Communications Cycle Time Reference Table Clear Switch (word n, bit 13) is turned ON.

Word	Bit 15 … Bit 00
m+15	Communications cycle time setting value (ms)
m+16	Communications cycle time present value (ms)
m+17	Communications cycle time maximum value (ms)
m+18	Communications cycle time minimum value (ms)

Ranges

Name	Range	Details
Communications cycle time setting value (ms)	0000 to 01F4 Hex (0 to 500)	Provide the communications cycle time setting as well as the present, maximum, and minimum communications cycle time in milliseconds. The default settings is 0000Hex (0).
Communications cycle time present value (ms)	0000 to FFFF Hex (0 to 65535)	
Communications cycle time maximum value (ms)		
Communications cycle time minimum value (ms)		

3-3-6 Master User-set Allocations Reference Table

The settings (area and size) for a maximum of four blocks (OUT block 1, OUT block 2, IN block 1, and IN block 2) can be accessed in the master user-set allocations reference table.

The OUT 1 and IN 1 areas and sizes are valid even if a Configurator is not being used.

Word	Bit 15 … Bit 08	Bit 07 … Bit 00
m+19	Reserved by system	OUT block 1 area
m+20	First word in OUT block 1	
m+21	No. of bytes in OUT block 1	
m+22	Reserved by system	IN block 1 area
m+23	First word in IN block 1	
m+24	No. of bytes in IN block 1	
m+25	Reserved by system	OUT block 2 area
m+26	First word in OUT block 2	
m+27	No. of bytes in OUT block 2	
m+28	Reserved by system	IN block 2 area
m+29	First word in IN block 2	
m+30	No. of bytes in IN block 2	

Ranges

Name	Range	Details
OUT block 1/2 area	See *Areas and Word Ranges*.	Shows the area.
First word in OUT block 1/2		Shows the first word for the block.
No. of bytes in OUT block 1/2	0000 to 03E8 Hex (0 to 1,000 bytes)	Shows the block size in bytes. The OUT block has not been allocated if this is set at 00 Hex.
IN block 1/2 area	See *Areas and Word Ranges*.	Shows the area.
First word in IN block 1/2		Shows the first word for the block.
No. of bytes in IN block 1/2	0000 to 03E8 Hex (0 to 1,000 bytes)	Shows the block size in bytes. The OUT block has not been allocated if this is set at 00 Hex.

Areas and Word Ranges

Code	Name	Word range
00 Hex	---	The block is not used.
01 Hex	CIO Area (CIO)	0000 to 17FF Hex (0 to 6143)
03 Hex	Data Memory (DM)	0000 to 7FFF Hex (0 to 32767)
04 Hex	Work Area (WR)	0000 to 01FF Hex (0 to 511)
05 Hex	Holding Relay (HR)	0000 to 01FF Hex (0 to 511)
08 to 14 Hex	Expansion Data Memory (EM) Bank 0 to bank C (13 banks)	0000 to 7FFF Hex (0 to 32767) for all banks

3-3-7 Slave User-set Allocations Reference Table

The slave block settings can be accessed in the Slave User-set Allocations Reference Table. A maximum of two OUT and two IN areas (OUT 1, IN 1, OUT 2, and IN 2) can be used for slave communications and their area and size can be accessed in the table.

The OUT 1 and IN 1 areas and sizes are valid even if a Configurator is not being used.

Word	Bit 15 … Bit 08	Bit 07 … Bit 00
m+31	Reserved by system	Slave OUT 1 area
m+32	First word in the slave OUT 1 area	
m+33	OUT 1 area size (bytes)	
m+34	Reserved by system	Slave IN 1 area
m+35	First word in slave IN 1	
m+36	IN 1 area size (bytes)	
m+37	Reserved by system	Slave OUT 2 area (Always 0)
m+38	First word in the slave OUT 2 area (Always 0)	
m+39	OUT 2 area size (bytes) (Always 0)	
m+40	Reserved by system	Slave IN 2 area
m+41	First word in slave IN 2	
m+42	IN 2 area size (bytes)	

Note OUT2 is not used.

Ranges

Name	Range	Details
OUT 1/2 area	See *Areas and Word Ranges*.	Shows the area.
First word in the OUT block 1/2		Shows the first word for the area.
OUT 1/2 area size	00 to C8 Hex (0 to 200 bytes)	Shows the area by size in bytes.
IN 1/2 area	See *Areas and Word Ranges*.	Shows the area.
First word in the IN blocks1/2		Shows the first word for the area.
IN 1/2 area size	00 to C8 Hex (0 to 200 bytes)	Shows the block size in bytes.

Areas and Word Ranges

Code	Name	Word range
00 Hex	---	The block is not used.
01 Hex	CIO Area (CIO)	0000 to 17FF Hex (0 to 6143)
03 Hex	Data Memory (DM)	0000 to 7FFF Hex (0 to 32767)
04 Hex	Work Area (WR)	0000 to 01FF Hex (0 to 511)
05 Hex	Holding Relay (HR)	0000 to 01FF Hex (0 to 511)
08 to 14 Hex	Expansion Data Memory (EM) Bank 0 to bank C (13 banks)	0000 to 7FFF Hex (0 to 32767) for all banks

3-3-8 Slave Detailed Status

The status of the slaves controlled by the master function of the Unit is provided by node address. Each word provides the status of two slaves.

Word	Bit 15 … Bit 08	Bit 07 … Bit 00
m+43	Detailed slave status at node address 1	Detailed slave status at node address 0
m+44	Detailed slave status at node address 3	Detailed slave status at node address 2
to m+74	:	
	Detailed slave status at node address 63	Detailed slave status at node address 62

Bit	Name	Status	Controlled by	Unit operation
00, 08	Slave Error Flags	ON	Unit	Indicates that a remote I/O communications error has occurred with the slave. More specifically, this bit turns ON when at least one of the following errors occurs: • Verification Error Flag (word n+12 bit 00) • Structure Error Flag (word n+12 bit 01) • Remote I/O Communications Error Flag (word n+12 bit 02)
		OFF	Unit	Indicates that an error has not occurred or turns OFF when the error has been cleared.
01, 09	Slave Verification Error Flags	ON	Unit	Indicates that the data for the slave registered in the scan list is different from the actual Slave. It occurs with the scan list enabled.
		OFF	Unit	Indicates that a verification error has not occurred or turns OFF when a verification error is cleared.
02, 10	Slave Configuration Error Flags	ON	Unit	Indicates that an error that disables I/O allocations has occurred at the Slave (with the scan list disabled).
		OFF	Unit	Indicates that a structure error has not occurred or turns OFF when the structure error is cleared.

Bit	Name	Status	Controlled by	Unit operation
03, 11	Slave Remote I/O Communications Error Flag	ON	Unit	Indicates that an error has occurred in remote I/O communications with the Slave. This bit turns ON if a timeout occurs in at least one connection with multiple connections set. This error occurs with the scan list enabled or disabled.
		OFF	Unit	Indicates that a remote I/O communications error has not occurred or turns OFF when a remote I/O communications error is cleared.
04, 12	Reserved by system	---	---	---
05, 13	Master COS Send Failure Flag	ON	Unit	Indicates that COS sent to a slave destination failed. Use the Master COS Send Switch (n+2/n+3/n+4/n+5 words) to send COS. The following may be cause failure of COS signal transmission. • Remote I/O communications stopped • A COS connection was not established • Bus OFF has occurred. • A network power error has occurred. • A send timeout has occurred. Once this bit turns ON, it will remain ON until the operation is successfully completed.
		OFF	Unit	Indicates that the error has not occurred. The bit turns OFF when COS is successfully sent.
06, 14	Scan List Registration Flag	ON	Unit	Indicates that the slave is registered in the scan list.
		OFF	Unit	The Unit is operating with the scan list disabled or the Unit is not registered in the scan list.
07, 15	Remote I/O Communications Flag	ON	Unit	Indicates that normal remote I/O communications were conducted with the slaves at all set connections. This bit turns OFF if a timeout occurs in at least one connection with multiple connections set.
		OFF	Unit	Indicates that remote I/O communications failed (no slave present, no scan list registered, verification error, structure error) or that a communications error is occurring.

SECTION 4
Remote I/O Master Communications

This section describes the remote I/O communications performed as a DeviceNet master by the Devicenet Unit.

4-1 Master Remote I/O Communications 96
4-1-1 Allocations 96
4-1-2 Remote I/O Master Specifications 99
4-1-3 Precautions on the Number of Master Units. 100
4-1-4 Procedure for Using Remote I/O Master 101
4-2 Scan List 103
4-3 Fixed Allocations 105
4-3-1 Allocated Words 105
4-3-2 Procedure 106
4-3-3 Changing System Components. 109
4-3-4 Fixed Allocations Example. 109
4-4 User-set Allocations 111
4-5 Starting and Stopping Remote I/O Communications 120
4-5-1 Starting Remote I/O Communications 120
4-5-2 Stopping Remote I/O Communications 120
4-5-3 Restarting Remote I/O Communications 120
4-6 Example of Ladder Programming for Remote I/O Communications 120
4-7 Errors that May Occur in Remote I/O Communications 122

4-1 Master Remote I/O Communications

Remote I/O communications are used to automatically transfer data between slaves and the CPU Unit without any special programming in the CPU Unit under which the Master Unit is mounted.

Master Communications

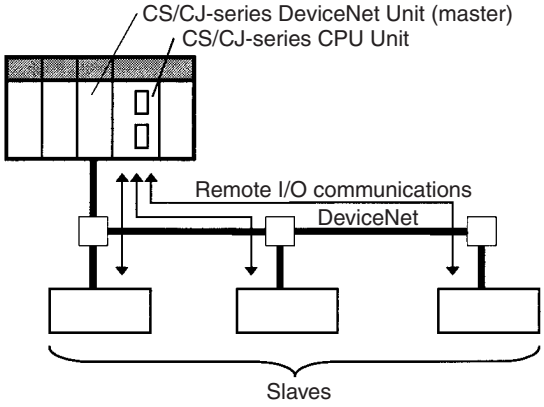

Note

1. A CS/CJ-series DeviceNet Unit can function as either a master or slave in remote I/O communications and it can even function as both a master and a slave at the same time. Turn ON the Master Enable Switch (word n, bit 06) in the Software Switches in the words allocated in the CIO Area to set the CS/CJ-series DeviceNet Unit to function as a master. Once this switch is turned ON and master communications are enabled, the Unit will continue to perform master communications regardless of whether the power is turned OFF and back ON again. Turn ON the Master Stop Switch (word n, bit 07) to stop master communications. Master communications are the focus of this section.
2. In the following descriptions, a CS/CJ-series DeviceNet Unit set to function as a master is referred to as a “Master Unit” and a CS/CJ-series DeviceNet Unit set to function as a slave is referred to as a “Slave Unit”.

4-1-1 Allocations

All slaves are allocated words in the I/O memory of the CPU Unit to which the Master Unit is mounted. They are allocated using one of the following methods:

1) Fixed allocations
2) User-set allocations

Fixed Allocations

Any one of the three areas below can be specified as the words allocated in the CIO Area for fixed allocations. The output (OUT) block and the input (IN) block are allocated strictly in order of node addresses in one of the areas shown below.

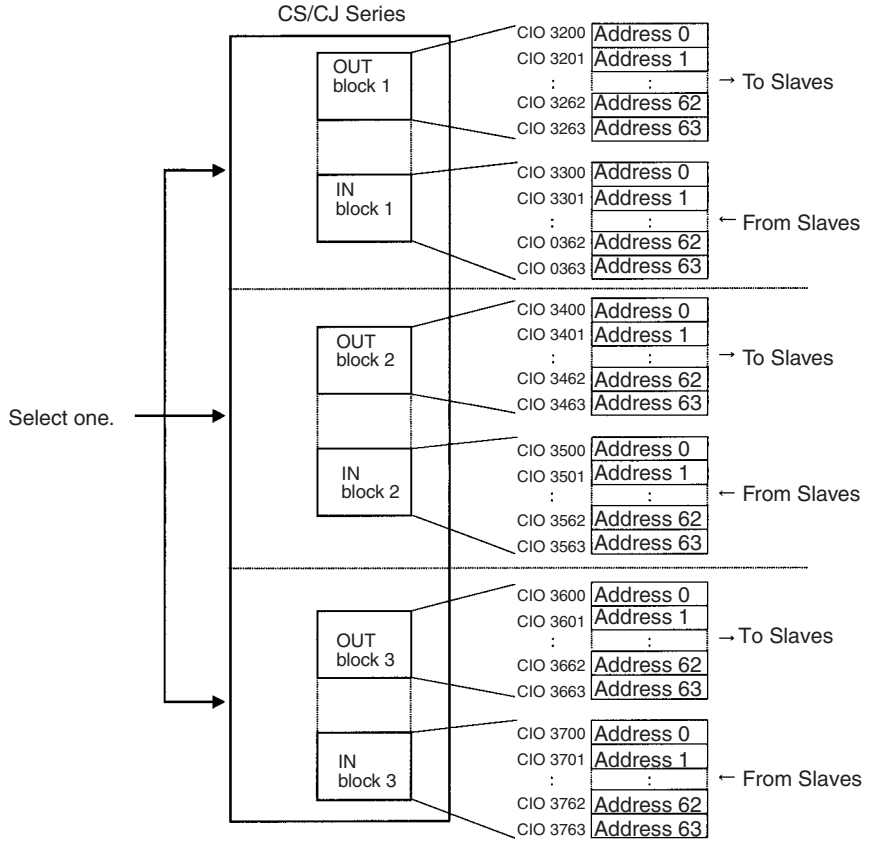

Words are allocated to slaves starting from address 0 in the output (OUT) and IN blocks. Each address is allocated at least one byte (rightmost).

- More than one word is allocated for each slave (according to its node address) with more than16 I/O points.
- The rightmost byte of the word is allocated to each slave that has less than 16 I/O points.

User-set Allocations

The following methods are used for user-set allocations:

- Using a Master User Allocations Table (allocated DM Area words)
- Using the Configurator

Using the Master User Allocations Table

In the Master User Allocations Table, set the areas and first words for the output block (OUT 1) and the input block (IN 1) and set the area and first word for the Allocation Size Setup Table. In the Allocation Size Setup Table, set the allocation sizes for the slave input and output blocks. Each slave can be allocated two blocks, OUT 1 and IN 1, according to the settings in these tables.

The OUT and IN blocks will be allocated in order of slave node addresses. Each block is a maximum of 500 words.

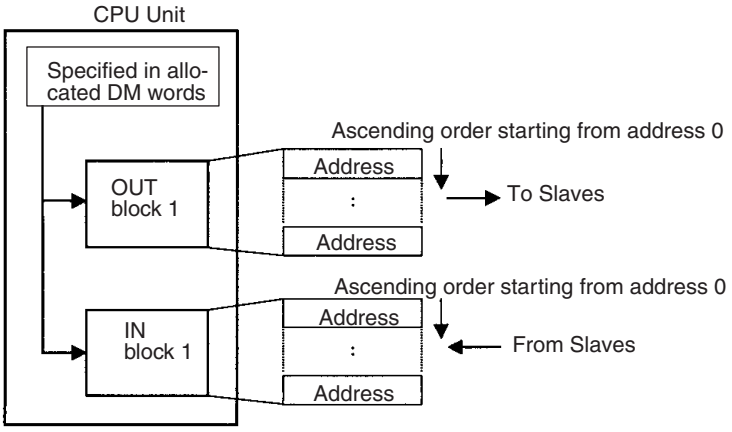

Each address is allocated at least one byte (rightmost).

- More than one word is allocated for each slave with more than16 I/O points (according to its node address).
- The rightmost byte of the word is allocated to each slave that has less than 16 I/O points.

Using the Configurator

When using the Configurator, each slave can be allocated four blocks: Output (OUT) blocks 1 and 2 and input blocks 1 and 2. Each block is a maximum of 500 words.

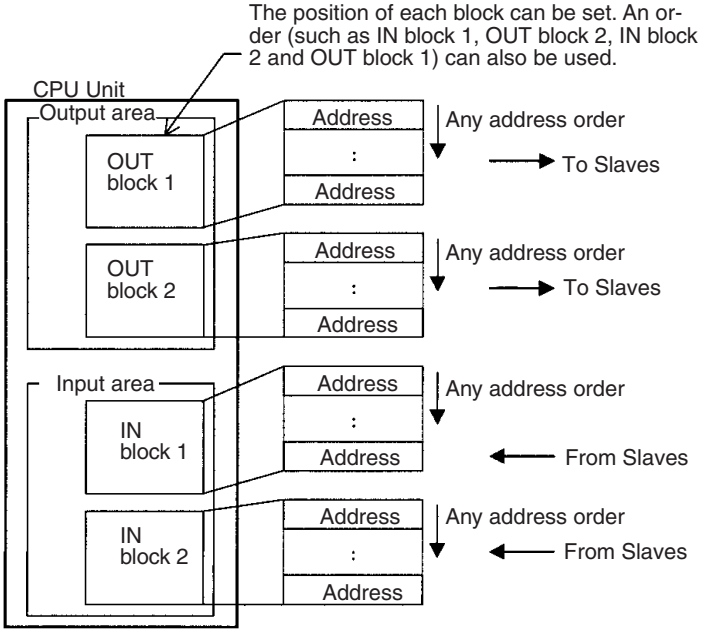

Any order can be used for block allocations and for slave allocations within each block. Each address is allocated at least one byte (rightmost).

- More than one word is allocated for each slave with more than16 I/O points (using it's node address).
- The leftmost or rightmost byte of the word is allocated to each slave that has less than 16 I/O points.

4-1-2 Remote I/O Master Specifications

Item	Specifications						
Slave allocation methods	Fixed allocations	Select one of the following fixed allocation areas using the Fixed Allocated Area Switches 1, 2, and 3 in the software switches in the allocated CIO Area words.					
		Allocated words (CIO Area)	I/O	Size	Fixed Allocation Area Setting 1	Fixed Allocation Area Setting 2	Fixed Allocation Area Setting 3
			Output (OUT) area	64 words	3200 to 3263	3400 to 3463	3600 to 3663
			Input (IN) area	64 words	3300 to 3363	3500 to 3563	3700 to 3763
			Select one of the above areas using the software switches. All are fixed at 1 word per node address. The default setting is Fixed Allocation Area Setting 1.				
	User-set allocations	By allocated DM Area words	Set the areas and the first words for the OUT 1 and IN 1 blocks in the scan list Setup Table in the allocated DM Area words. Set the allocation size for each slave using the allocation size Setup Table (any words). Allocations must be in the order of node addresses.				
			Allocated words	The input and output areas can be the following sizes starting from any word in any of the following areas: CIO Area, WR Area, HR Area, DM, Area, or EM Area.			
				Output (OUT) area	500 words max. × 1 block		
				Input (IN) area	500 words max. × 1 block		
		By Configurator	Set the areas for the OUT 1/2 and IN 1/2 blocks, the first words, and the allocation sizes for all slaves using the Configurator. Blocks can be set for nodes in any order.				
			Allocated words	The input and output areas can be the following sizes starting from any word in any of the following areas: CIO Area, WR Area, HR Area, DM, Area, or EM Area.			
				Output (OUT) area	500 words max. × 2 blocks		
				Input (IN) area	500 words max. × 2 blocks		
No. of Masters that can be mounted	Fixed allocations		3 Units max. (Unique words must be allocated using the Allocated CIO Area Words Software Switches.)				
	User-set allocations	By allocated DM Area words	16 Units max. (Unique words must be allocated using the user Setup Table in the allocated DM Area words.)				
		By Configurator	16 Units max. (Unique words must be allocated using the Configurator.)				
Max. No. of slaves connected per DeviceNet Unit	Fixed allocations		63 nodes				
	User-set allocations	By allocated DM Area words					
		By Configurator					
Max. No. of I/O points per DeviceNet Unit	Fixed allocations		2,048 pts (64 input words, 64 output words)				
	User-set allocations	By allocated DM Area words	16,000 pts (500 input words x 1 block, 500 output words x 1 block)				
		By Configurator	32,000 pts (500 input words x 2 blocks, 500 output words x 2 blocks)				

Item	Specifications		
Max. No. of I/O per Slave controllable by a DeviceNet Unit	Fixed allocations		2,048 pts (64 input words, 64 output words)
	User-set allocations	By allocated DM Area words	3,200 pts (100 input words, 100 output words)
		By Configurator	3,200 pts (100 input words, 100 output words)

4-1-3 Precautions on the Number of Master Units

The following system configurations can be constructed based on various numbers of Master Units when DeviceNet Units are used.

Pattern			One Master Unit connected on a single network	Multiple Master Units connected on a single network	Multiple Master Units connected to a single PLC
Configuration			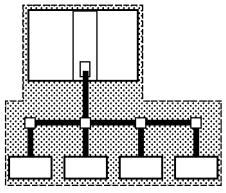	Yes 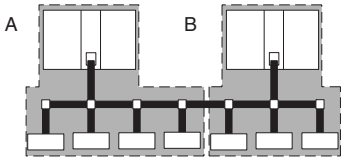	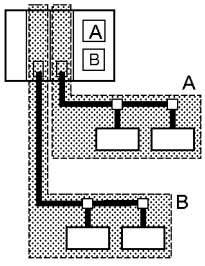
Remote I/O communications					
	Fixed allocations		❍	×	❍(Up to 3 Master Units can be used.)
	User-set allocations	By DM Area words	❍	❍ (See note.)	❍
		By Configurator	❍	❍(See note.)	❍
Precautions			Same as previous networks.	• The communications cycle time is longer. **Note** The communications cycle time for the network in the figure above is TA+TB if sections A and B above are separate networks with a communications cycle time of TA and TB. • Multiple Master Units cannot share a single Slave Unit. • Bus Off errors (communications stopped by multiple transmissions) may occur if multiple Master Units with disabled scan lists are present on a single network.	• The cycle time of the PLC is longer. • Make sure that each word allocated in the system is allocated to only one Master Unit.

Note Only one Master Unit can be connected to a network if the user specifies a COS or cyclic connection from the Configurator. Remote I/O communications errors may occur is more than one Master Unit is connected for a COS or cyclic connection.

4-1-4 Procedure for Using Remote I/O Master

Fixed Allocations for Remote I/O

1,2,3...

1. Turn ON the communications, slave, and PLC power supplies.

   Note Turn ON the communications power supply prior to turning ON the slave power supply or the slaves may not go online.

2. Switch the CPU Unit to PROGRAM mode.
3. Turn ON the Master Enable Switch (word n, bit 06). (The master will remain enabled even if the power is turned OFF and back ON again.)

   Note Execute this only when master communications are turned OFF. (If the Master Enable Switch is turned ON when master communications are enabled, a Unit error will occur and a C2 error will be displayed on the 7-segment display on the front panel.)

4. Perform the following steps to start with the scan list disabled.

   Skip to step 5. to re-register and enable the scan list.

   Skip to step 6. to start with the scan list enabled without any changes to the fixed allocations or scan list.

   Note The mode can be confirmed from the dots on the 7-segment display on the Master Unit.
   Left dot not lit: Scan list enabled
   Left dot flashing: Scan list disabled

   a) Turn ON a Master Fixed Allocation Setting Switch (word n, bits 08 to 10).
   b) Monitor and check the registered slave data area to see if communications are possible with registered slaves.
   c) Turn ON the Scan List Enable Switch (word n bit 00) from a Programming Device.
   d) Go to step 6.

5. Perform the following steps to re-register the scan list when starting with the scan list enabled.

   a) Turn ON the Scan List Clear Switch (word n, bit 01) from a Programming Device.
   b) Turn ON a Master Fixed Allocation Setting Switch (word n, bits 08 to 10).
   c) Monitor and check the registered slave data area to see if communications are possible with registered slaves.
   d) Turn ON the Scan List Enable Switch (word n, bit 00) from a Programming Device.

6. Start master remote I/O communications with the scan list enabled. Use the software switches to start or stop communications.
7. Check to see if both the MS and NS indicators are lit green on the master and all slaves.
8. Switch the CPU Unit to RUN mode.

User-set Remote I/O Allocations Using DM Area Settings

1,2,3...

1. Turn ON the communications, slave, and PLC power supplies.

   Note Turn ON the communications power supply prior to turning ON the slave power supply or the slaves may not go online.

2. Switch the CPU Unit to PROGRAM mode.

3. Turn ON the Master Enable Switch (word n bit 06). (The master will remain enabled even if the power is turned OFF and back ON again.)

   Note Execute this only when master communications are turned OFF. (If the Master Enable Switch is turned ON when master communications are enabled, a Unit error will occur and a C2 error will be displayed on the 7-segment display on the front panel.)
4. Set data in the Master User Allocation Setup Table (words m+1 to m+6) and the Allocation Size Setup Table in the DM Area words allocated to the Unit from the PLC Programming Device.
5. Turn ON the Master User-set Allocations Switch (word n, bit 11).
6. Start master remote I/O communications with the scan list enabled. Use the software switches to start or stop communications.
7. Check to see if both the MS and NS indicators are lit green on the master and all slaves.

   Note The mode can be confirmed from the dots on the 7-segment display on the Master Unit.
   Left dot not lit: Scan list enabled
   Left dot flashing: Scan list disabled
8. Switch the CPU Unit to RUN mode.

User-set Remote I/O Allocations Using the Configurator

1,2,3...

1. Connect the Configurator to the network through a serial line or dedicated Board/Card.
2. Turn ON the communications, slave, and PLC power supplies.

   Note Turn ON the communications power supply prior to turning ON the slave power supply or the slaves may not go online.
3. Switch the CPU Unit to PROGRAM mode.
4. Perform the following steps to allocate areas, create scan lists, and download the settings to the nodes.
   a) Create a network configuration offline on the Configurator.
   b) Enable master communications in the CS1W-DRM21(-V1) properties.
   c) Create master device parameters.
   d) Save the data as a network component file.

   Note If desired, you can also go directly online and download the network component file to the network devices without saving the file.

   e) Read the network component file, go online, and download the file to the network devices.
5. Start master remote I/O communications with the scan list enabled. Use the software switches to start or stop communications.
6. Check to see if both the MS and NS indicators are lit green on the Master Unit and all Slave Units.

   Note The mode can be confirmed from the dots on the 7-segment display on the Master Unit.
   Left dot not lit: Scan list enabled
   Left dot flashing: Scan list disabled
7. Read the network components using the Configurator.
8. Save the components as a network component file using the Configurator.
9. Switch the CPU Unit to RUN mode.

Note

1. Remote I/O communications with a specified slave can be stopped to effectively disconnect the slave from the network by turning ON the Discon-

nect/Connect Switch for that slave (words n+6 to n+9). This can be done when a slave is replaced or to register a slave in the scan list in preparations to connect it to the network at a later time. The Disconnect/Connect Switches, however, are cleared when the power supply is turned OFF, so the bit must be turned back ON from the ladder program after the power turns ON in order for it to remain effective.

2. Use Configurator Ver. 2.10 or higher for the CJ1W-DRM21.

4-2 Scan List

A scan list is used to register the slaves with which the Master Unit communicates in DeviceNet remote I/O communications. It is the basis on which the Master Unit communicates with slaves.

The Master Unit does not contain a scan list by default. The CS/CJ-series DeviceNet Unit, however, has a default setting that allows it to communicate with all slaves even with the scan list disabled, but this operating mode should not be used for normal operation. Always create a scan list prior to operating the Unit.

Scan List Contents

The contents of the scan list is listed in the following table. When a Master Unit goes online, it compares each of these items with the slaves that are actually connected to the network. The items that are compared, however, will depend on the allocation method that is used.

Item	Description	Fixed allocations	User-set allocations using allocated DM Area words	User-set allocations from the Configurator
Node address	Node address for every Slave	Compared		Compared
Allocated IN/OUT sizes and allocation	Settings of the number of bytes allocated to every slave in a data area of the Master Unit	Compared		Compared
Vendor	Unique manufacturer ID	Not compared		Set from Configurator
Device type	Unique product type value	Not compared		Set from Configurator
Product code	Unique product model value	Not compared		Set from Configurator
Connection type	Applicable DeviceNet protocol (See *Appendix B DeviceNet Connections* for details.)	Automatically set		Automatically set or set from Configurator
Connection path	Type of slave I/O data (See *Appendix B DeviceNet Connections* for details.)	Cannot be set		Set from Configurator

Creating the Scan List

The way that a scan list is prepared varies with the allocation method as shown below.

Fixed allocations	User-set allocations through the allocated DM Area words area	User-set allocations through the Configurator
With the CPU Unit in PROGRAM mode: 1. Turn ON the one of the Master Fixed Allocation Setting 1 Switches (1 to 3). 2. Turn ON the Scan List Enable Switch.	With the CPU Unit in PROGRAM mode, turn ON the Master User Allocations Setup Switch.	Create a list from the Configurator. (Acquire a list of online devices, use it to create a scan list, and then register the scan list in the Master Unit.)

Note

1. Be sure to create a scan list before starting actual system operation.
2. It is still possible to communicate with Units (with the scan list disabled) if a scan list is not created when fixed allocations areas 1 to 3 are used. This may result in faulty operation because the Master Unit will communicate with slaves even if they do not start up due to problems, such as equipment failure if there is no a scan list.

Scan List Enabled and Scan List Disabled

The scan list must be made. The scan list modes are described here.

Scan List Enabled (Used for Actual Operation)

Remote I/O communications are performed according to the registered scan list and only with slaves that are on the list. A verification error occurs (word n+12, bit 00 in the status area turns ON) if a slave registered on the scan list is not present on the network, if a slave did not start up when remote I/O communications started, or if the number of I/O points did not match the number registered.

Scan List Disabled (Used when Changing System Components)

Remote I/O communications can be performed with fixed allocations instead of a scan list in order to change a system component. Do not operate without a scan list during actual system operation. Use this mode only to replace a Master Unit or to change a system component (change a connected slave or a node address).

Note a) To disable the scan list, turn ON the Scan List Clear Switch (word n, bit 01) during remote I/O communications with the scan list enabled (with fixed allocations, user-set allocations using allocated DM Area words, or user-set allocations using the Configurator). In all these cases, remote I/O communications are executed using the fixed allocations area that was last used when the list was disabled. All slaves are targeted for remote I/O communications with the scan list disabled.

b) Slaves that are connected to the network while communications are in progress are also targeted for communications. Errors cannot be confirmed, however, even if there are slaves present that did start up due to problems such as equipment failure because there is no scan list available to check communications against. The communications cycle time will also be significantly longer than the calculated value.

c) The scan list is automatically enabled when user-set allocations are set using the allocated DM Area words or the Configurator. If the list is subsequently cleared using a software switch, fixed allocations (1 to 3) will be used for remote I/O communications when the scan list is disabled. Make sure the system has stopped before

you disable the scan list with a Master Unit that is set for user-set allocations. Particularly when multiple Master Units are connected to a single network, communications will not be performed successfully if even one Master Unit on the network is operating with the scan list disabled. Once the list is disabled, the user-set allocations data registered in the Master Unit is lost.

Backing Up the Scan List

A scan list must be created to switch the DeviceNet Unit to operation with the scan list disabled or to replace a DeviceNet Unit. It is important to back up the list using one of the following methods:

Fixed Allocations or User-set Allocations in Allocated DM Area Words

Save the scan list as a backup file on Memory Card by turning ON the Setup File Backup Switch (word n+1, bit 15) in the words allocated in the CIO Area.

User-set Allocations from the Configurator

Save the scan list as a backup file on Memory Card or save it either as a network component file and master parameter file using the Configurator. In the preceding cases, turn ON the Setup File Restore Switch (word n+1, bit 14) in the words allocated in the CIO Area to input setup data, such as the scan list backed up on Memory Card, into a DeviceNet Unit.

4-3 Fixed Allocations

4-3-1 Allocated Words

Words in the CS/CJ-series DeviceNet CIO Area in the CPU Unit are allocated. An area of words can be selected from one of three fixed allocation areas. Use a Software Switch to select the allocation area.

Each area is comprised of an OUT area that is used to write output data to slaves and an IN area that is used for input from slaves in remote I/O communications.

Area	OUT area (word)	IN area (word)	Selection method
Fixed allocation area 1	CIO 3200 to CIO 3263	CIO 3300 to CIO 3363	Turn ON the Master Fixed Allocation Setting 1 Switch (word n, bit 08).
Fixed allocation area 2	CIO 3400 to CIO 3463	CIO 3500 to CIO 3563	Turn ON the Master Fixed Allocation Setting 2 Switch (word n, bit 09).
Fixed allocation area 3	CIO 3600 to CIO 3663	CIO 3700 to CIO 3763	Turn ON the Master Fixed Allocation Setting 3 Switch (word n, bit 10).

A maximum of 3 DeviceNet Units can be included as masters in a single PLC because the three allocation areas above are set individually for fixed allocations. The default setting is fixed allocations area 1.

Each OUT/IN area is allocated to a slave according to its node address as shown below. Allocated words are determined by the node address in fixed allocations as shown.

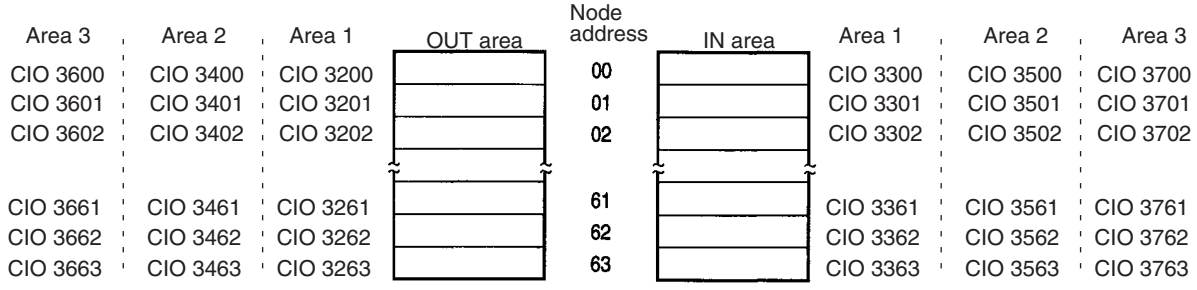

Note More than one Master Unit can be included in a single PLC with fixed allocations, as shown below (3 Units max.).

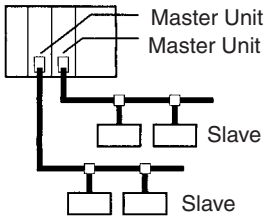

4-3-2 Procedure

Step 1: Place the CPU Unit in PROGRAM mode.

Step 2: Turn ON the Master Enable Switch

If the master communications have been disabled (if Master Function Enable Flag (word n+11, bit 03) is OFF), turn ON the Master Enable Switch (word n, bit 06) to enable master communications. Once Master communications have been enabled by turning this switch ON, it will not change even if the power is turned OFF and back ON again.

Note If the master communications are enabled (if Master Function Enable Flag (word n+11, bit 03) is ON), skip this step and go onto the next step. (If the Master Enable Switch is turned ON when master communications are enabled, a Unit error will occur and a C2 error will be displayed on the 7-segment display on the front panel.)

Step 3: Turn ON the Scan List Clear Switch

If the Unit is in the Scan List Enable mode (if Scan List Disabled Flag (word n+11, bit 04) is OFF), turn ON the Scan List Clear Switch (word n, bit 01) to change to the Scan List Disable mode.

Note If the Unit is already in the Scan List Disable mode (if the Scan List Disabled Flag (word n+11, bit 04) is ON), skip this step and go onto the next step. (If the Scan List Clear Switch is turned ON when the Unit is in the Scan List Disable mode, a Unit error will occur and a C2 error will be displayed on the 7-segment display on the front panel.)

Step 4: Select Fixed Allocations Area 1 to 3

Turn ON the Master Fixed Allocation Setting 1 to 3 Switch (word n, bits 08 to 10) in the Software Switches in the words allocated in the CIO Area to select the fixed allocations area from1 to 3. One word will be allocated per node address in order of node addresses for the output (OUT) block and one word for the input (IN) block in the CS/CJ-series DeviceNet CIO Area.

First word n = CIO 1500 + (25 x unit number)

Software Switch address	Software Switch name	Fixed allocations area number	Allocated OUT area	Allocated IN area
Word n, bit 08	Master Fixed Allocation Setting 1 Switch	Fixed allocations area 1	CIO 3200 to CIO 3263	CIO 3300 to CIO 3363
Word n, bit 09	Master Fixed Allocation Setting 2 Switch	Fixed allocations area 2	CIO 3400 to CIO 3463	CIO 3500 to CIO 3563
Word n, bit 10	Master Fixed Allocation Setting 3 Switch	Fixed allocations area 3	CIO 3600 to CIO 3663	CIO 3700 to CIO 3763

Step 5: Turn ON the Scan List Enable Switch

Remote I/O communications will start with the scan list disabled after a fixed allocations area has been selected. Check to see if communication is proceeding normally with each slave, and then turn ON the Scan List Enable Switch (word n, bit 00) to communicate with the scan list enabled.

Fixed Allocations Area 1

OUT blocks are allocated to slaves from CIO 3200 to CIO 3263 and IN blocks are allocated to slaves from CIO 3300 to CIO 3363.

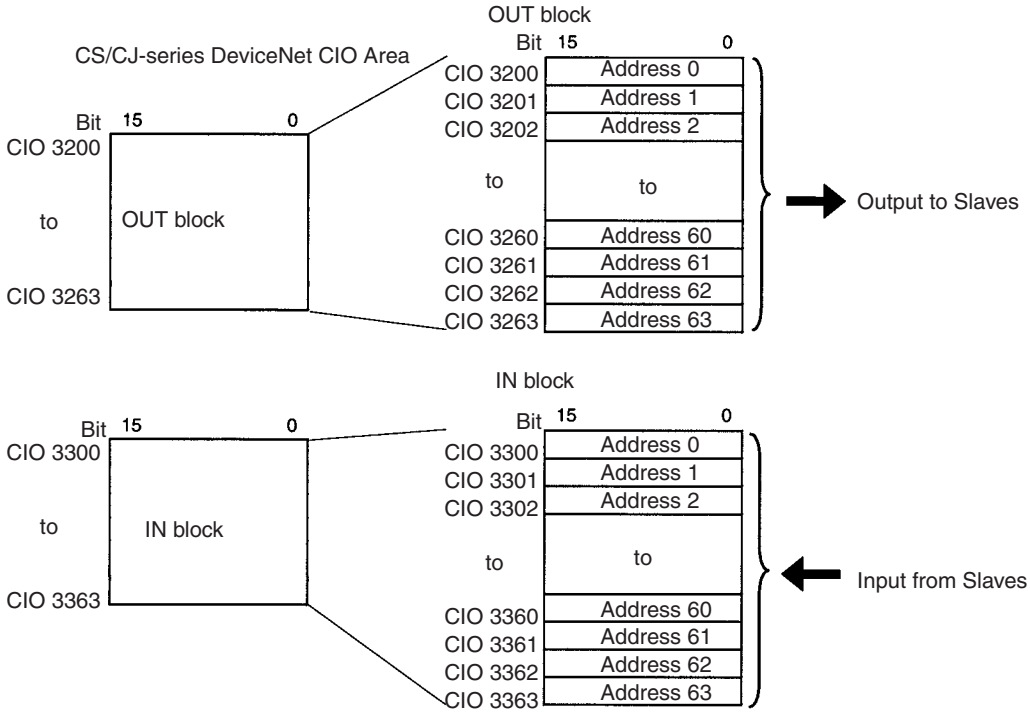

Fixed Allocations Area 2

OUT blocks are allocated to slaves from CIO 3400 to CIO 3463 and IN blocks are allocated to slaves from CIO 3500 to CIO 3563.

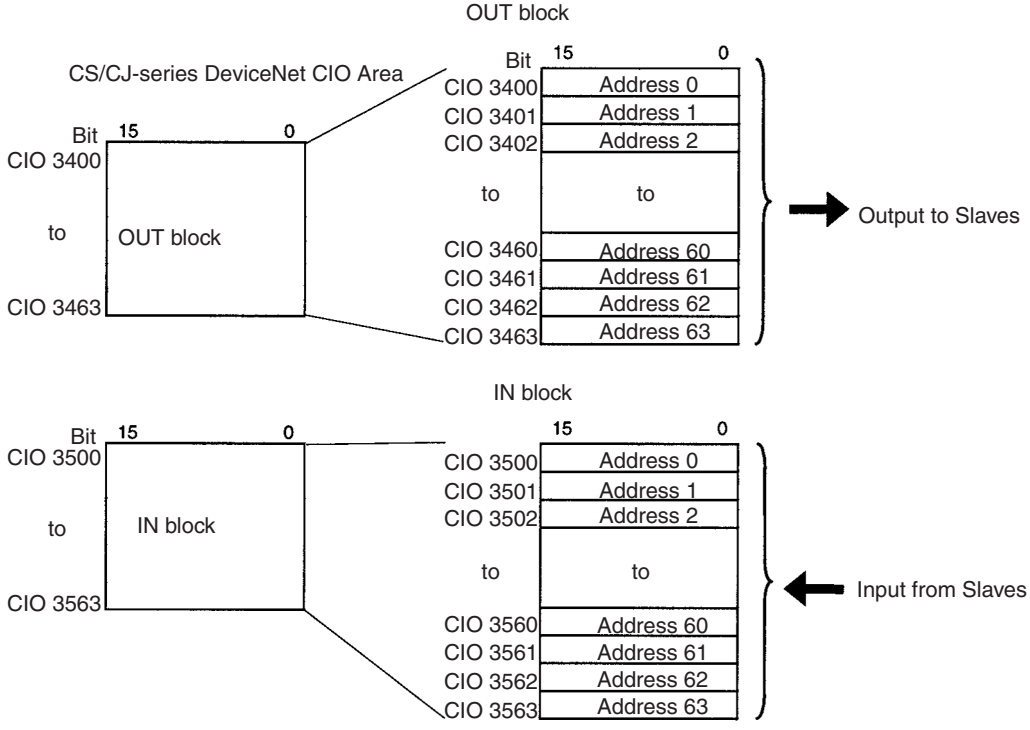

Fixed Allocations Area 3

OUT blocks are allocated to slaves from CIO 3600 to CIO 3663 and IN blocks are allocated to slaves from CIO 3700 to CIO 3763.

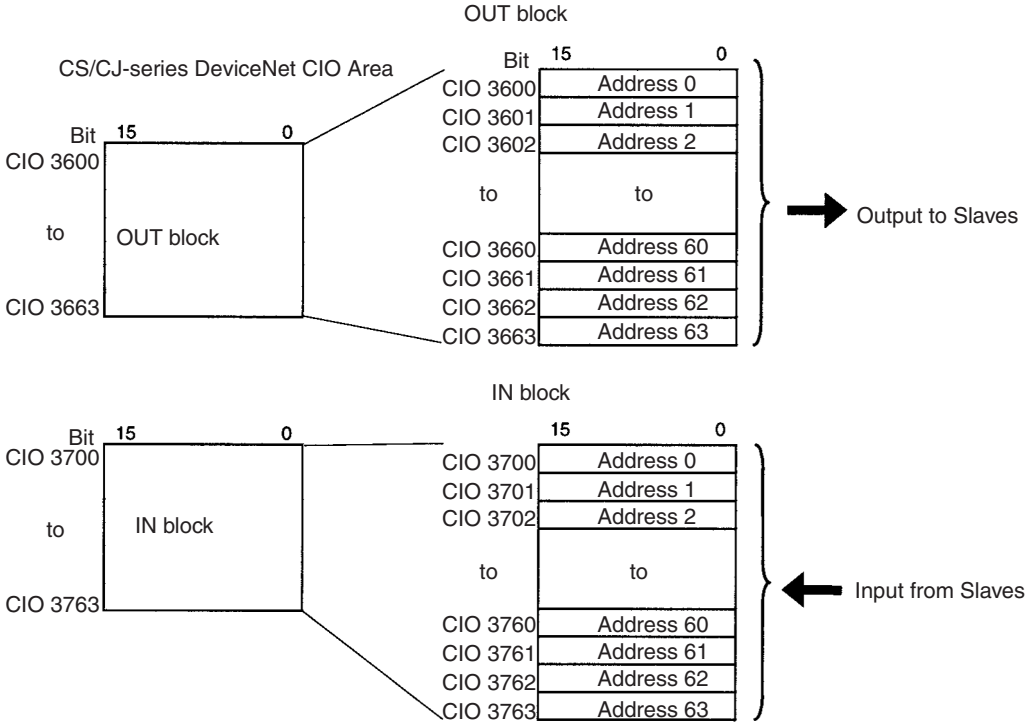

The Slave allocation order is fixed in the output (OUT) and IN blocks starting from address 0. Each address is allocated at least one byte (rightmost).

- More than one word is allocated for each slave (according to it's node address) with more than16 I/O points.
- The rightmost byte of the word is allocated to each slave that has less than 16 I/O points.

Note The table below shows how fixed allocations areas differ between the C200HW-DM21-V1 DeviceNet Master Unit of the C200H-series, and the CS1W-DRM21(-V1) DeviceNet Unit of the CS/CJ-series and CJ1W-DRM21 DeviceNet Unit of the CJ-series.

Item		C200HW-DRM21-V1	CS1W-DRM21(-V1) /CJ1W-DRM21
Fixed allocations area		C200 DeviceNet CIO Area	CS/CJ-series DeviceNet CIO Area
	Output area	CIO 0050 to CIO 0099	CIO 3200 to CIO 3263 CIO 3400 to CIO 3463 CIO 3600 to CIO 3663
	Input area	CIO 0350 to CIO 0399	CIO 3300 to CIO 3363 CIO 3500 to CIO 3563 CIO 3700 to CIO 3763

4-3-3 Changing System Components

The scan list must be cleared in the following situations:

- Adding a slave
- Removing a slave
- Changing a node address

Turn OFF the Scan List Clear Switch (word n, bit 01) to clear the scan list. Remote I/O communications will be performed with the scan list disabled using fixed allocations in the fixed allocations area that was used the last time the list was disabled. Make sure that communications with all slaves are operating properly after the scan list is cleared and the system component is changed, and then turn ON the Scan List Enable Switch (word n, bit 00) again to register all slaves currently online in the scan list. Remote I/O communications will continue during this time with the scan list enabled.

4-3-4 Fixed Allocations Example

This example shows the allocations that are used when Fixed Allocations 1 are used for the following slaves.

Node address	Outputs	Inputs	Product
0	0 pts	8 pts	8-pt Transistor Input Terminal (DRT1-ID08)
1	8 pts	0 pts	8-pt Transistor Output Terminal (DRT1-OD08)
2	0 pts	16 pts	16-pt Transistor Input Terminal (DRT1-ID16)
3	16 pts	0 pts	16-pt Transistor Output Terminal (DRT1-OD16)
4	8 pts	8 pts	8-pt Input and 8-pt Output Environment-resistant Terminal (DRT1-MD16C)
5	16 pts	16 pts	CQM I/O Link Terminal (CQM1-DRT21)
6	0 pts	48 pts	C200 I/O Link Unit (C200HW-DRM21) with 48 input pts (3 words)
7			
8	32 pts		Analog Output Terminal with 2 output pts (DRT2-DA02)
9		0 pts	

Resulting Slave Allocation

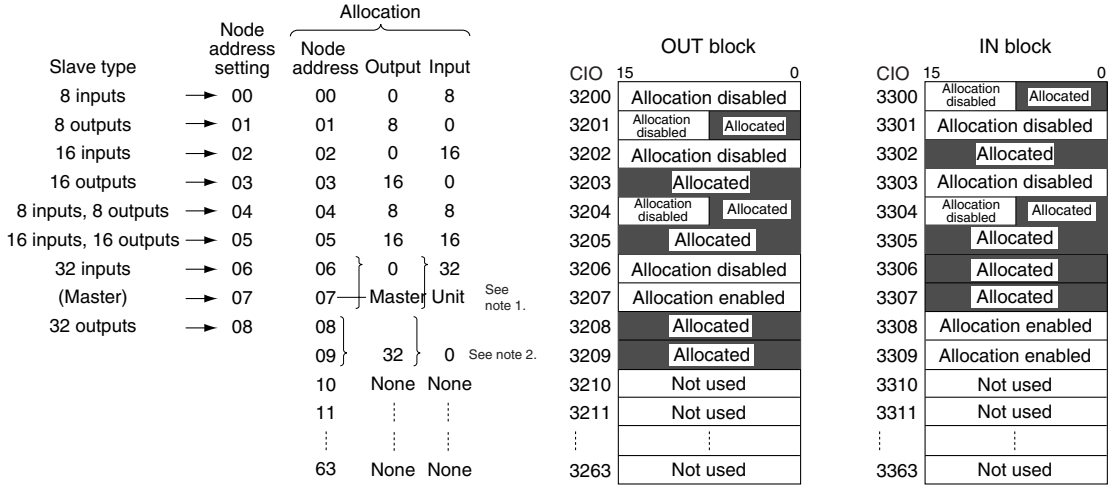

Note

1. The Master Unit does not require any word allocation and so it can use any available address.
2. Blocks for which allocation is enabled can be allocated to Slaves as long as the blocks do not overlap.

Turn ON the Scan List Enable Switch

Turn ON the Scan List Enable Switch (word n, bit 00, CIO 150000 in this example). This will create a scan list based on data for slaves that are actually online and will start remote I/O communications with the scan list enabled.

4-4 User-set Allocations

With a CS/CJ-series DeviceNet Unit, remote I/O communications slaves can be allocated in any area (CIO, WR, HR, DM, or EM) using one of the following methods.

- Setting through the allocated DM Area words (Master User Allocations Table)
- Setting through the Configurator

User-set Allocations Methods

Method		Set through the allocated DM Area words (Master User Allocations Table)	Set through the Configurator
Allocation areas		CIO: 0000 to 6143 WR: W000 to W511 HR: HR000 to HR511 DM: D00000 to D32767 EM: E00000 to E32767 (Banks 0 to C)	
No. of allocated blocks		2 blocks: OUT 1 and IN 1 OUT 1 and IN 1 can be created anywhere in the above areas.	4 blocks: OUT 1, IN 1, OUT 2 and IN 2 OUT 1, IN 1, OUT 2, and IN 2 can be created anywhere in the above areas.
Block allocation order		Any order	
Node address order		Allocations must be in order of node addresses (0 to 63 in ascending order) **Note** 1. Not all nodes need to be allocated, reducing the number of words required. 2. Node addresses do not have to correspond between blocks.	Any order **Note** 1. Node addresses do not have to correspond between blocks. 2. One node address cannot be allocated to different blocks.
Start bit for allocations		All allocations start from bit 00 (Cannot start from bit 08. All allocations are in 1 word units.)	Allocations can start from bit 00 or bit 08. Allocations starting from bit 08 are in 1-byte units only.
Allocation size	Per block	500 words max.	
	Total size	1,000 words max. for a total of 2 blocks	2,000 words max. for a total of 4 blocks
Slave allocation limits	Slaves with more than 8 points	The leftmost byte (bits 07 to 15) cannot be used.	
	Slaves with 8 points	Allocated to the leftmost or rightmost bytes (not allocated a word)	
	Slaves with 16 points	Allocated one word	
	Slaves with more than 16 points	Allocated multiple words (with an odd number of bytes, only the rightmost byte is allocated in the last word)	

Note Functions will vary as shown below depending on whether allocations are set through the allocated DM Area words (Master User Allocations Table) or through the Configurator.

- Words are always allocated to slaves in order of ascending node addresses when allocations are set with the allocated DM Area words. The order can be determined by the user when the Configurator is used. (However, even when using the allocated DM Area words, nodes do not have to be allocated words, reducing the number of words required.)
- Only two blocks (OUT 1 and IN 1) can be allocated when setting are made with the allocated DM Area words area, but there are four blocks (OUT 1/2 and IN 1/2) available with the Configurator.

- The first bit for node allocations is always bit 00 when setting allocations with the allocated DM Area words, but can be either bit 00 or bit 08 with the Configurator. (Allocations for slaves with two bytes or more cannot start at bit 08.

Setting through the Allocated DM Area Words (Master User Allocations Table)

All slaves are allocated words in order of node addresses in two blocks: OUT block 1 and IN block 1.

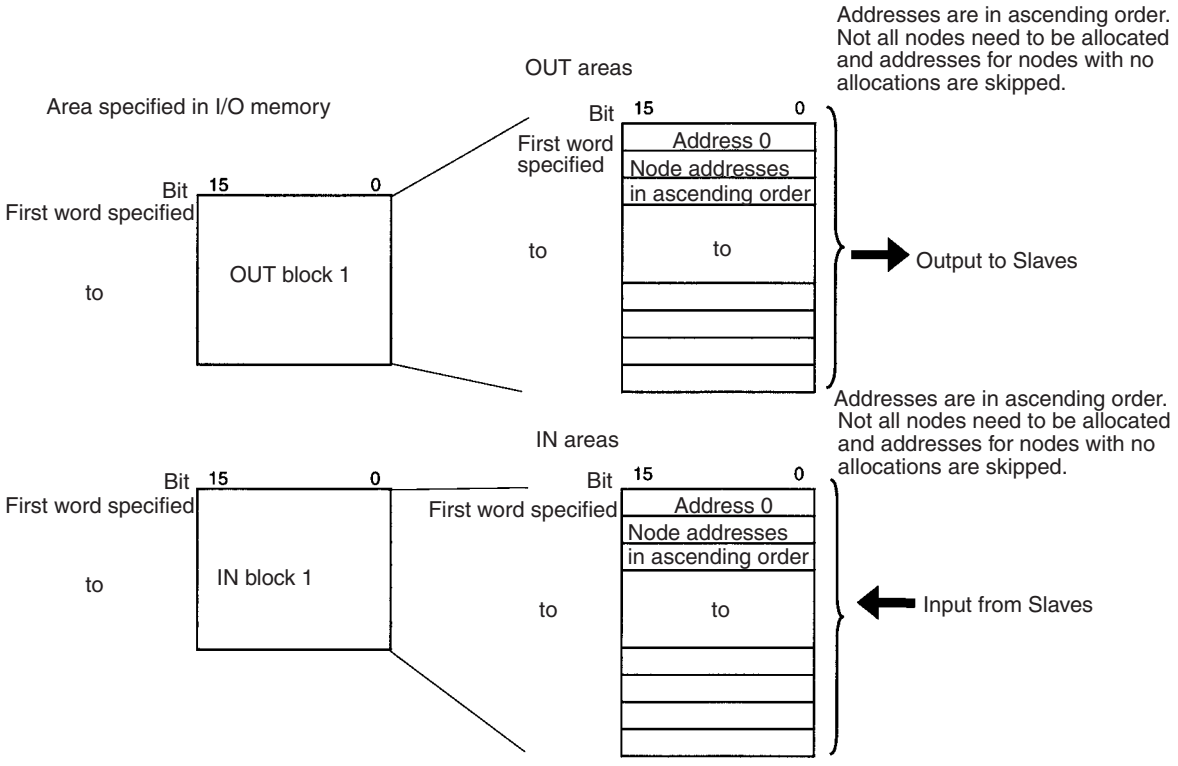

The block allocation order and block allocation areas can be set. Node addresses in each block are allocated words in ascending order from 0 to 63. Node addresses that are not allocated are skipped (not allocated words). Each address is allocated at least one byte (rightmost byte, 1 word, or multiple words).

- More than one word is allocated for each slave (according to it's node address) with more than16 I/O points.
- The rightmost byte of the word is allocated to each slave that has less than 16 I/O points.

Note Multiple Master Units can be included in a single PLC as shown below using user-set allocations (16 Units max.).

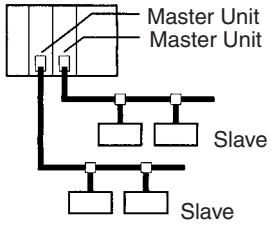

Procedure

Step 1: Turn ON the Master Enable Switch

Make sure that master communications have disabled by checking to see if Master Enable Function Flag (word n+11, bit 03) is OFF and then turn ON the Master Enable Switch (word n, bit 06) to enable master communications. Once master communications have been enabled by turning this switch ON, they will remain enabled even if the power is turned OFF and back ON again.

Note Do not turn ON the Master Enable Switch unless master communications are stopped. (If the Master Enable Switch is turned ON when master communications are enabled, a Unit error will occur and a C5 error will be displayed on the 7-segment display on the front panel.)

Step 2: Setting the Master User Allocations Table

This table specifies the area and first word for each block and the area and first word for the Allocation Size Setup Table.

- Master User Allocations Table

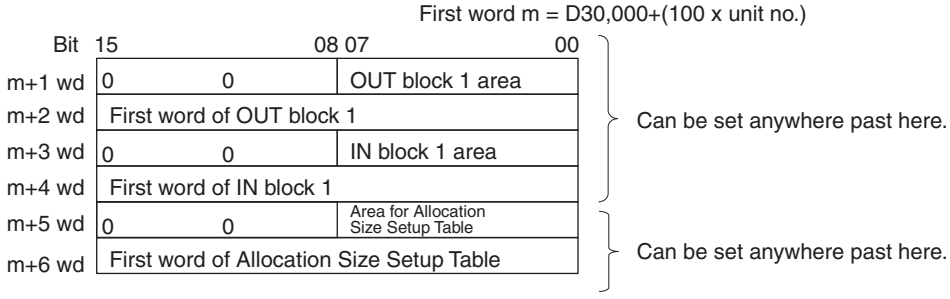

- Areas and Word Ranges for OUT Block 1, IN Block 1, and the Allocation Size Setup Table

Code	Name	Word range
00 Hex	---	The block is not used.
01 Hex	CIO Area (CIO)	0000 to 17FF Hex (0 to 6143)
03 Hex	Data Memory (DM)	0000 to 7FFF Hex (0 to 32767)
04 Hex	Work (WR)	0000 to 01FF Hex (0 to 511)
05 Hex	HR (HR)	0000 to 01FF Hex (0 to 511)
08 to 14 Hex	Expansion Data Memory (EM) Bank 0 to bank C (13 banks)	0000 to 7FFF Hex (0 to 32767) for all banks

Step 3: Setting the Allocation Size Setup Table

Specify the area and first word in this table at words m+5 and m+6. IN and OUT sizes for all nodes are set here as shown in the table below. The setting range for each node is 0 to 200 bytes (0 to 100 words), although actual size depends on the allocated slaves. The maximum size per block is 500 words. If the size set here is larger than 1 byte, the start bit for all slaves is bit 00 and size is allocated in ascending node address order starting from the beginning of the OUT 1 and IN 1 areas in word units. If the size is set at 0 bytes for a node address, it is skipped the words are allocated to the next address.

- Allocation Size Setup Table

I is the first word in the Allocation Size Setup Table and is specified at words m+5 and m+6

Bit	15 … 08	07 … 00
I+0	Node address 0 OUT size (bytes)	Node address 0 IN size (bytes)
I+1	Node address 1 OUT size (bytes)	Node address 1 IN size (bytes)
to	to	
I+62	Node address 62 OUT size (bytes)	Node address 62 IN size (bytes)
I+63	Node address 63 OUT size (bytes)	Node address 63 IN size (bytes)

Step 4: Turn ON the Slave User Allocations Switch

Turn ON the Slave User allocations Switch (word n, bit 11). This will make the DeviceNet Unit read allocation results data for the slaves above from the CPU Unit and create a scan list based on data for slaves that are actually online prior to starting remote I/O communications with the scan list enabled.

Note The Master User Allocations Switch not only reads slave allocation data, but it also enables the scan list.

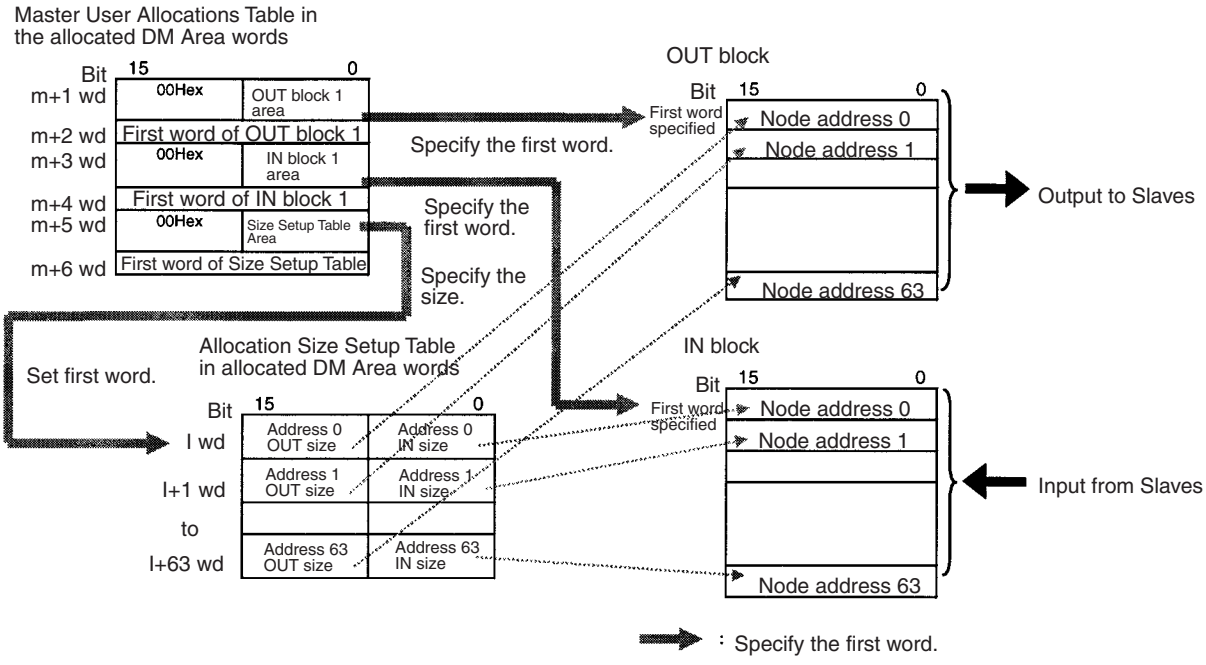

Note

1. Any order can be used for the OUT 1 and IN 1 blocks.
2. Node addresses do not have to correspond between output block 1 and input block 1.

Example: This is not necessary.

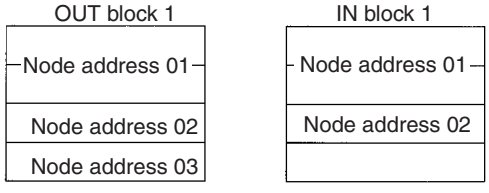

3. The start bit for node addresses must always be bit 00, and never bit 08.

4. Multiple masters cannot share the same slave.

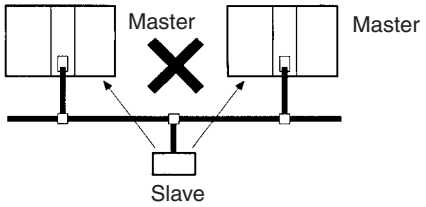

5. Be sure to use user-set allocations and operate the Master Unit with the scan list enabled if multiple masters are connected to a single network. Communications will not be possible if there is more than one master with the scan list disabled connected to a network.

Changing System Components

In the following situations, the table must be reset, the Master User Allocations Switch (word n, bit 11) turned ON, and the scan list recreated:

- Adding a slave
- Removing a slave
- Changing a node address
- Changing a node allocation

There is no need to clear the scan list.

Example Settings for User-set Allocations through Allocated DM Area Words

This example uses the following settings for unit number 0.

- OUT block 1 area and first word: WR (04 Hex), 50 (0032 Hex)
- IN block 1 area and first word: WR (04 Hex), 100 (0064 Hex)
- Allocation Size Setup Table area and first word: DM (03 Hex), 00100 (0064 Hex)

This example shows user-set allocations for the following slaves.

Node address	Outputs	Inputs	Product
0	16 pts	0 pts	16-pt Transistor Output Terminal (DRT1-OD16)
1	8 pts	8 pts	8-pt input and 8-pt Output Environment-resistant Terminal (DRT1-MD16C)
2	16 pts	16 pts	CQM I/O Link Terminal (CQM1-DRT21)
3	0 pts	8 pts	8-pt Transistor Input Terminal (DRT1-ID08)
4	None		---
5	160 pts	160 pts	CS/CJ-series DeviceNet Unit (CS1W-DRM21(-V1)) (Slave Unit)

Master User Allocations Table

		15			00	
m+1 :	30001	0	0	0	4	OUT block 1 area: WR (04 Hex)
m+2 :	30002	0	0	3	2	First word of OUT block 1: 50 (0032 Hex)
m+3 :	30003	0	0	0	4	IN block 1 area: WR (04 Hex)
m+4 :	30004	0	0	6	4	First word of IN block 1: 100 (0064 Hex)
m+5 :	30005	0	0	0	3	Area for the Allocation Size Setup Table: DM (03 Hex)
m+6 :	30006	0	0	6	4	First word of the Allocation Size Setup Table: 00100 (0064 Hex)

Allocation Size Setup Table

		15			00	OUT sizes specified in the leftmost byte	IN sizes specified in the rightmost byte
I :	00100	0	2	0	0	Address 0 OUT: 2 (bytes)	Address 0 IN: 0 (bytes)
I+1 :	00101	0	1	0	1	Address 1 OUT: 1 (bytes)	Address 1 IN: 1 (bytes)
I+2 :	00102	0	2	0	2	Address 2 OUT: 2 (bytes)	Address 2 IN: 2 (bytes)
I+3 :	00103	0	0	0	1	Address 3 OUT: 0 (bytes)	Address 3 IN: 1 (bytes)
I+4 :	00104	0	0	0	0	Address 4 OUT: 0 (bytes)	Address 4 IN: 0 (bytes)
I+5 :	00105	1	4	1	4	Address 5 OUT: 20 (bytes)	Address 5 IN: 20 (bytes)

Resulting Slave Allocations

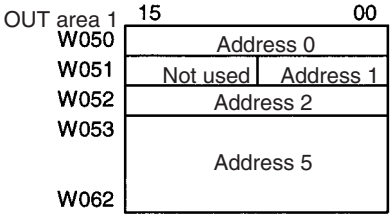

Address 0 allocated two bytes (1 word).
Address 1 allocated 1 byte, leftmost byte is not used.
Address 2 allocated two bytes (1 word).
Address 5 allocated 20 bytes (10 words).

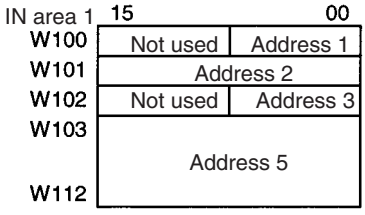

Address 1 allocated 1 byte, leftmost byte is not used.
Address 2 allocated two bytes (1 word).
Address 3 allocated 1 byte, leftmost byte is not used.
Address 5 allocated 20 bytes (10 words).

Turning ON the Master User Allocations Switch

Turn ON the Master User Allocations Switch (word n, bit 11, CIO 150011 in this example). The Master User Allocations Switch will read the allocation results data for the above slaves and create a scan list based on data for slaves that are actually online prior to starting remote I/O communications with the scan list enabled.

Setting through the Configurator

Slaves can be allocated words in any order for the following blocks: OUT block 1, OUT block 2, IN block 1, and IN block 2.

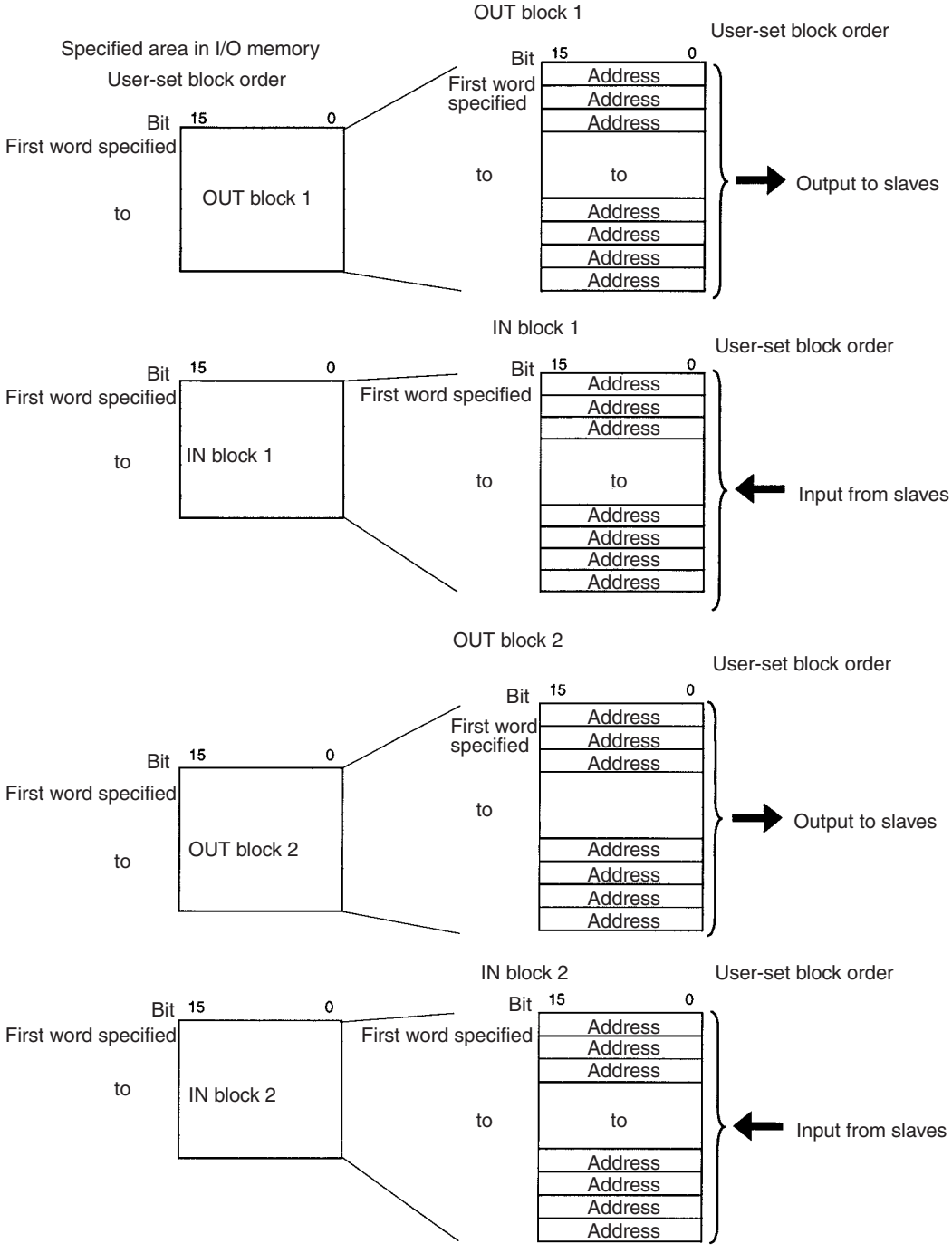

The block allocation order, block allocation areas, and order of node addresses in each block can be set by the user, each address is allocated at least one byte (rightmost or leftmost byte).

- More than one word is allocated for each slave (according to it's node address) with more than16 I/O points.
- The leftmost or rightmost byte of the word is allocated to each slave that has less than 16 I/O points.

Procedure

Step 1

Set the area, start word, and words allocated for each block using the Configurator.

Step 2

Allocate words to all node addresses in each block as shown below using the Configurator.

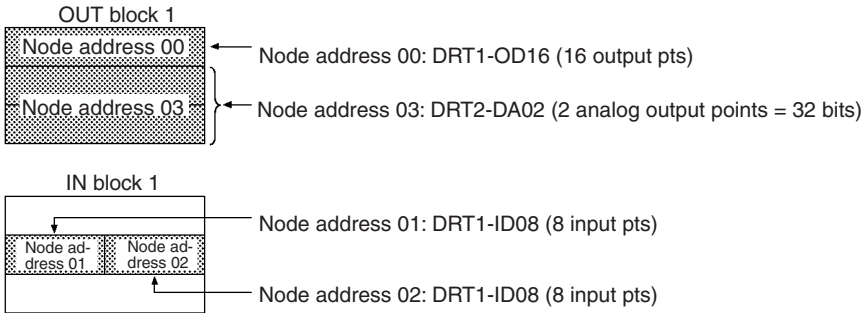

- Each address is allocated at least one byte (rightmost or leftmost byte).

Note a) The order of all blocks can be set as desired by the user.

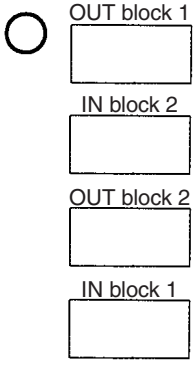

b) Node addresses do not have to correspond between an output block and input block.

Example: This is not necessary.

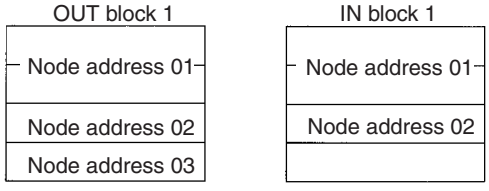

c) The same node address cannot be allocated more than once.

Example:

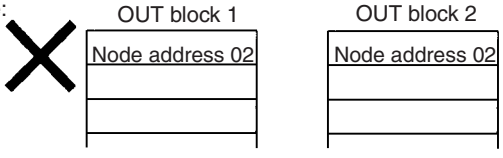

d) The start bit for node addresses can be bit 00 or bit 08. If it is bit 08 however, 2 or more bytes cannot be allocated as shown below.

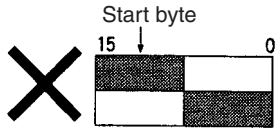

e) Multiple masters cannot share the same slave.

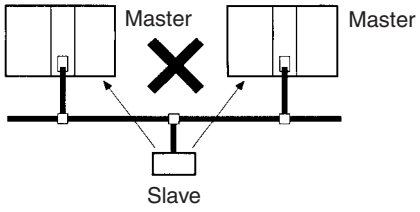

You can determine whether there are duplicate node addresses in the I/O allocations (scan lists) that were created simply by conducting a master parameter file duplicate check from the Configurator.

f) Be sure to use user-set allocations and operate with the scan list enabled if multiple masters are connected to a single network. A Bus OFF errors will occur if multiple fixed allocations masters operating with the scan list disabled are present on a single network.

g) Multiple Master Units can be included in a single PLC as shown below using user-set allocations (16 Units max.).

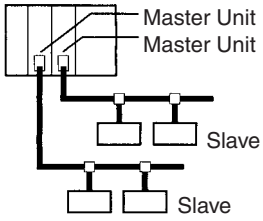

Note Use Configurator Ver. 2.10 or higher for the CJ1W-DRM21.

Example of User-set Allocations Using the Configurator

Slave types	Node address setting	Allocation status: Node address	Output	Input
16 output pts	00	00	16 pts	0 pts
Combination of 8 input and output pts	01	01	8 pts	8 pts
Combination of 16 input and output pts	02	02	16 pts	16 pts
8 input pts	03	03	0 pts	8 pts
32 output pts	10	10	32 pts	0 pts
Slave types	**Node address setting**	**Node address**	**Output**	**Input**
48 input pts	04	04	0 pts	48 pts
8 input pts	09	09	0 pts	8 pts
Combination of 8 output and 16 input pts	12	12	8 pts	16 pts

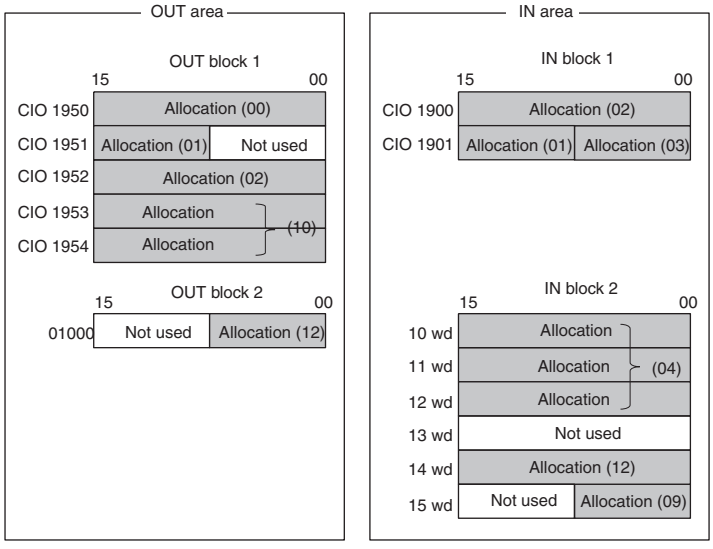

Configurator Setting Methods

Refer to the *DeviceNet Configurator Operation Manual* (W382) for setting methods.

4-5 Starting and Stopping Remote I/O Communications

4-5-1 Starting Remote I/O Communications

Remote I/O communications start automatically after the power is turned ON or the Unit is restarted.

The I/O Data Communications Flag (word n+12, bit 15) is turned ON when remote I/O communications is started with at least one slave.

4-5-2 Stopping Remote I/O Communications

Remote I/O communications stop under the following user-controlled conditions. Message communications can still be performed when the remote I/O communications stop.

Stop Communications With All Slaves

Remote I/O communications stop when the Remote I/O Communications Stop Switch (word n, bit 04) is turned ON.

Stop Communications With a Specified Slave

Remote I/O communications stop when the Disconnect/Connect Switch for the desired slave (words n+6 to n+9) is turned ON. (Units are disconnected from remote I/O communication when the Disconnect/Connect Switch is turned ON.)

Note The communications cycle time is not shorter even though a slave has been disconnected from remote I/O communications by turning ON the Disconnect/Connect Switch. (Blank time in the communications cycle will only be increased.)

4-5-3 Restarting Remote I/O Communications

Remote I/O communications restart under the following conditions.

Restart Communications with All Slaves

Remote I/O communications restart when the Remote I/O Communications Start Switch (word n, bit 02 or 03) is turned ON. (Only communications with slaves with the Disconnect/Connect Switch turned OFF will be restarted.)

Restart Communications with Specified Slave

Remote I/O communications restart when the Disconnect/Connect Switch for the desired slave (words n+6 to n+9) is turned OFF. (A slave will participate in remote I/O communications while the Disconnect/Connect Switch is OFF.)

4-6 Example of Ladder Programming for Remote I/O Communications

When writing ladder programming for remote I/O communications, make sure it performs I/O processing with a Slave under the following conditions:

- The I/O Data Communications Flag (word n+12, bit 15) is ON.
- The Unit Error Flag (word n+10, bit 00) is OFF.

Example: There is no jump and slave I/O is processed when the JMP(004) instruction input condition is ON in the following instructions. There is a jump and slave I/O is not processed when the JMP(004) instruction input condition is OFF.

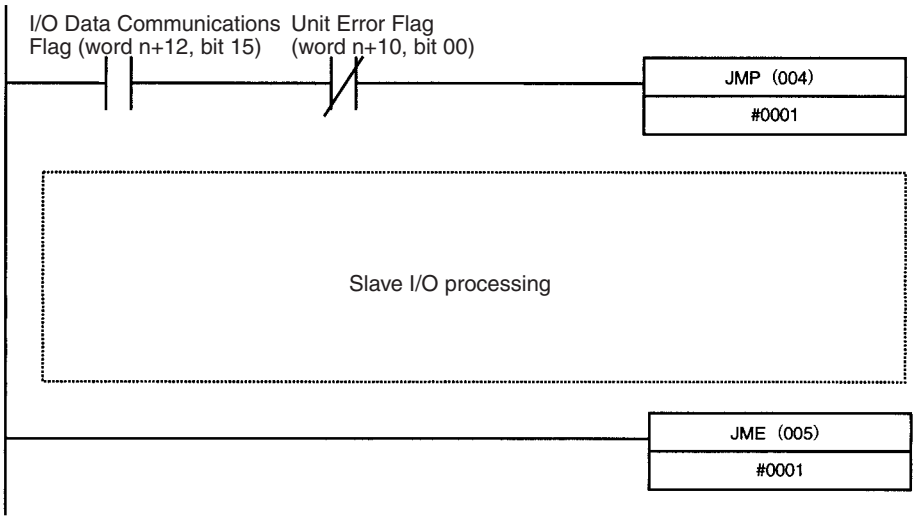

Note Even if there is a communications error with the slave, the slave input data is saved in the allocated area.

To prevent operating errors, make the ladder program so that no slave I/O processing will occur when the Unit Error Flag (word n+10, bit 00) is ON.

4-7 Errors that May Occur in Remote I/O Communications

The following errors may occur during remote I/O communications.

Condition	Error		Details	Results	Indicators	7-segment display
Error occurs in fixed allocations with the scan list disabled	Structure Error Flag (word n+12, bit 04) turns ON	Duplicate I/O area	The same I/O word is allocated to two or more slaves. (This occurs whenever a slave that is allocated multiple words has one of the words allocated to the node address of another Slave.)	Reconnect with the error slave and continue remote I/O communications.	MS: Not related NS: Flashes red	d0
		I/O area range exceeded	A slave is allocated an area outside the fixed allocations area. (This occurs whenever slaves are allocated multiple words and a slave is allocated a word beyond node address 63 in the fixed allocations area.)			d1
		Unsupported Slave	The I/O size of a slave exceeds 200 bytes (100 words). (This occurs if either the IN or the OUT size exceeds 200 bytes.)			d2
Error occurs in either fixed or user-set allocations with the scan list enabled	Verification Error Flag (word n+12, bit 00) turns ON	No slaves present	A Slave registered in the scan list is not present.			d5
		I/O size mismatched	The I/O size registered in the scan list does not match the I/O size of the slave. **Note** I/O size is compared in 8-point (1-byte) units. If I/O size is registered at 8 points for example, then an error I/O size mismatch will not occur with a Slave with just one input point connected.			d6
		Incorrect vendor	The vendor registered in the scan list does not match the slave vendor.			d6
		Incorrect device type	The device type registered in the scan list does not match the slave device type.			d6
		Incorrect product code	The product code registered in the scan list does not match the slave product code.			d6
		Incorrect connection bus	The connection bus registered in the scan list is set incorrectly.			d6
		Unsupported connection	The slave does not support the connection registered in the scan list.			d6

Condition	Error	Details	Results	Indicators	7-segment display
Fixed or user-set allocations	I/O communications error	A timeout occurred during remote I/O communications. (The Slave response timed out 6 times in a row or an error occurred 3 times in a row.)	Reconnect with the error Slave and continue remote I/O communications. *1	MS: Not related NS: Flashes red	d9
	Network power error	The network is not supplying communications power.		MS: Not related NS: Goes out	E0
	Send timeout	A communications request was not successfully completed due to the following reasons: • There are no devices on the network. • Baud settings do not match for every node. • CAN controller error			E2
	Duplicated node address	The master node address is the same address as another node.	All communications stop (remote I/O communications stop, slave operation stops, and message communications are disabled).	MS: Not related NS: Flashes red	F0
	Bus OFF detected	Bus OFF error was detected.			F1
	Master scan list logic error	The master scan list data is incorrect.	Remote I/O communications stop (Slave operation stops, but message communications are enabled).	MS: Flashes red NS: Not related	E8

Note Remote I/O communications will stop (7-segment display: A0) if DIP switch pin 3 on the front panel is turned ON to specify stopping remote I/O communications for I/O communications errors.

SECTION 5
Remote I/O Slave Communications

This section describes the remote I/O communications performed as a DeviceNet slave by the DeviceNet Unit.

5-1 Slave Remote I/O Communications 126
5-1-1 Allocation Methods 126
5-1-2 Remote I/O and Slave Communications Specifications 127
5-1-3 Procedures for Using Remote I/O Slave Communications 127
5-2 Fixed Allocations 129
5-2-1 Allocated Words 129
5-2-2 Procedure 129
5-3 User-set Allocations 130
5-3-1 Connection Types 131
5-3-2 Procedure 131
5-3-3 Connection Types 134

5-1 Slave Remote I/O Communications

A CS/CJ-series DeviceNet Unit can function as a Slave Unit in remote I/O communications and a single CS/CJ-series DeviceNet Unit can function as both a Master Unit and a Slave Unit. This section describes Slave communications.

Slave Communications

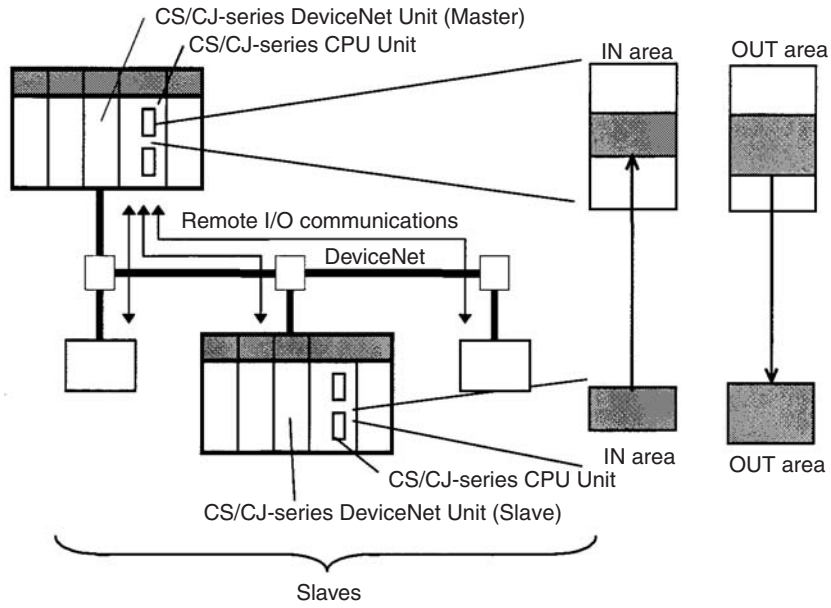

Note

1. In the following descriptions, the areas used to transfer data from the master to the slaves are called OUT areas and the areas used to transfer data from the slaves to the master are called the IN areas.
2. In the following descriptions, a CS/CJ-series DeviceNet Unit set to function as a master is referred to as a “Master Unit” and a CS/CJ-series DeviceNet Unit set to function as a slave is referred to as a “Slave Unit”.

5-1-1 Allocation Methods

All slaves are allocated words in the I/O memory of the CPU Unit to which the Master Unit is mounted. They are allocated using one of the following methods:

1) Fixed allocations
2) User-set allocations

5-1-2 Remote I/O and Slave Communications Specifications

Item	Specifications						
Allocation method	Fixed allocations	Select one of the following fixed allocation areas using the Slave Fixed Allocated Area Switches 1, 2, and 3 in the software switches in the allocated CIO Area words.					
		Allocated words (CIO Area)	I/O	Size	Fixed Allocation Area Setting 1	Fixed Allocation Area Setting 2	Fixed Allocation Area Setting 3
			Output (OUT) area to the slave from the master	1 word	3370	3570	3770
			Input (OUT) area to the master from the slave	1 word	3270	3470	3670
		Note Select one of the preceding areas using the software switches. All are fixed at 1 word per node address. The default setting is Fixed Allocation Area Setting 1.					
	User-set allocations	By allocated DM Area words	Set the areas, the first words, and slave allocation size for the OUT 1 and IN 1 blocks (total of 2 blocks) using the Slave User Allocation Setup Table in the allocated DM Area words.				
			Allocated words	The input and output areas can be the following sizes starting from any word in any of the following areas: CIO Area, WR Area, HR Area, DM, Area, or EM Area.			
				Output (OUT) area from this slave			100 words
				Input (IN) area to this slave			100 words
		By Configurator	Set the areas for the OUT 1 and IN 1/2 blocks, the first words, and the slave allocation sizes using the Configurator.				
			Allocated words	The input and output areas can be the following sizes starting from any word in any of the following areas: CIO Area, WR Area, HR Area, DM, Area, or EM Area.			
				Output (OUT) area from this slave			100 words
				Input (IN) area to this slave			100 words
Max. No. of I/O points per DeviceNet Unit slave	Fixed allocations		32 points (1 input word, 1 output word)				
	User-set allocations	By allocated DM Area words	3,200 pts (100 input words, 100 output words)				
		By Configurator	4,800 pts (100 input words x 2, 100 output words x 1)				

5-1-3 Procedures for Using Remote I/O Slave Communications

Fixed Allocations for Remote I/O

1,2,3...

1. Turn ON the communications, slave, and PLC power supplies.

   Note Turn ON the communications power supply prior to turning ON the slave power supply or the slaves may not go online.
2. Switch the CPU Unit to PROGRAM mode.
3. Turn ON the Slave Stop Switch (word n+1, bit 07) from the PLC Programming Device to stop slave communications.
4. Turn ON one of the Slave Fixed Allocation Setting Switches (1 to 3: word n+1, bits 08 to 10) from a Programming Device.
5. Turn ON the Slave Enable Switch (word n+1, bit 06) from a Programming Device to enable slave communications.
6. Switch the CPU Unit to RUN mode.

   Slave remote I/O communications will start up.

Note Slave communications must be disabled prior to area allocation and must be enabled after area allocation. The order of the procedure is 1) stop slave com-

munications, allocate areas, and then enable slave communications. The allocated areas will not be valid if the procedure is done in any other order.

User-set Remote I/O Allocations Using DM Area Settings

1,2,3...

1. Turn ON the communications, slave, and PLC power supplies.

   Note Turn ON the communications power supply prior to turning ON the slave power supply or the slaves may not go online.
2. Switch the CPU Unit to PROGRAM mode.
3. Turn ON the Slave Stop Switch (word n+1, bit 07) from the PLC Programming Device to stop slave communications.
4. Allocate areas as follows:
   a) Set the Slave User Allocation Setup Table (m+8 to m+13 words) and the Allocation Size Setup Table in the allocated DM Area words from a Programming Device.
   b) Turn ON the Slave User Allocations Switch (word n+1, bit 11) from a Programming Device.
5. Turn ON the Slave Enable Switch (word n+1, bit 06) from a Programming Device to enable slave communications.
6. Switch the CPU Unit to RUN mode.

   Slave remote I/O communications will start up.

Note

1. Slave communications must be disabled prior to area allocation and must be enabled after area allocation. The order of the procedure is 1) stop slave communications, allocate areas, and then enable slave communications. The allocated areas will not be valid if the procedure is done in any other order.
2. In fixed allocation or user-set allocations through the allocated DM Area settings, area allocations must be set with slave communications disabled and will be transferred to Units when slave communications are enabled.

User-set Remote I/O Allocations Using the Configurator

1,2,3...

1. Connect the Configurator to the network through a serial line or dedicated Board/Card.
2. Turn ON the communications, slave, and PLC power supplies.

   Note Turn ON the communications power supply prior to turning ON the slave power supply or the slaves may not go online.
3. Switch the CPU Unit to PROGRAM mode.
4. Perform the following steps to allocate areas, create scan lists, and download the settings to the nodes.
   a) Enable slave communications in CS1W-DRM21(-V1) or CJ1W-DRM21 properties using the Configurator.
   b) Create the device parameters to set slave communications.
   c) Save the data as a device parameter file.

   Note If desired, you can also go directly online and download the device parameter file to the DeviceNet Unit slave without saving the file.

   d) Read the device parameter file, go online, and download the file to the DeviceNet Unit slave.
5. Switch the CPU Unit to RUN mode.

   Slave remote I/O communications will start up.

Note 1. Enable slave communications in CS1W-DRM21(-V1) or CJ1W-DRM21 properties if the Configurator is used.
2. Use Configurator Ver. 2.10 or higher for the CJ1W-DRM21.

5-2 Fixed Allocations

5-2-1 Allocated Words

Words in the CS/CJ-series DeviceNet CIO Area in the CPU Unit are allocated. Words can be selected from one of three fixed allocation areas. Use a Software Switch to select the allocation area.

Each area is comprised of an OUT area that is used to write data to the master IN area and an IN area that is used for inputs from the master OUT area in remote I/O communications.

Area	OUT area (master to slave)	IN area (slave to master)	Selection method
Fixed allocation area 1	CIO 3370	CIO 3270	Turn ON the Slave Fixed Allocation Setting 1 Switch (word n, bit 08).
Fixed allocation area 2	CIO 3570	CIO 3470	Turn ON the Slave Fixed Allocation Setting 2 Switch (word n, bit 09).
Fixed allocation area 3	CIO 3770	CIO 3670	Turn ON the Slave Fixed Allocation Setting 3 Switch (word n, bit 010).

A maximum of 3 DeviceNet Units can be included as slaves in a single PLC because the three allocation areas above are set individually for fixed allocations. The default setting is fixed allocations area 1.

5-2-2 Procedure

Step 1: Stop Slave Communications

If the Unit is already functioning as a Slave Unit, turn ON the Slave Stop Switch (word n+1, bit 07) to stop slave communications. This step is not necessary if slave communications have already stopped.

Step 2: Select a Fixed Allocation Area

Turn ON one of the Slave Fixed Allocation Setting Switches (1 to 3: word n+1, bits 08 to 10) in the allocated CIO Area words to select a fixed allocation area between 1 and 3. One words is allocated for the output (OUT) area from the Slave Unit to the master and another word is allocated for the input (IN) area from the master to the Slave Unit in the CS/CJ-series DeviceNet CIO Area, as shown below.

First word n = CIO 1500 + (25 x unit number)

Software switch address	Software switch name	Fixed allocation area	Allocated output (OUT) area (master to slave)	Allocated input (IN) area (slave to master)
Word n+1, bit 08	Slave Fixed Allocation Setting 1 Switch	Fixed allocation area 1	CIO 3370	CIO 3270
Word n+1, bit 09	Slave Fixed Allocation Setting 2 Switch	Fixed allocation area 2	CIO 3570	CIO 3470
Word n+1, bit 10	Slave Fixed Allocation Setting 3 Switch	Fixed allocation area 3	CIO 3770	CIO 3670

Step 3: Turn ON the Slave Enable Switch

Turn ON the Slave Enable Switch (word n+1, bit 06). This will allocated the fixed allocation areas as slave areas and the DeviceNet Unit will start slave remote I/O communications. Slave communications will run automatically after that whenever the power is turned ON.

Fixed Allocation Area 1

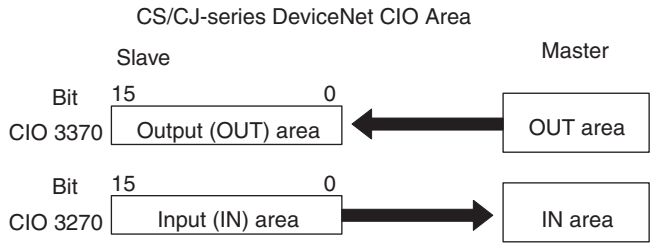

Fixed Allocation Area 2

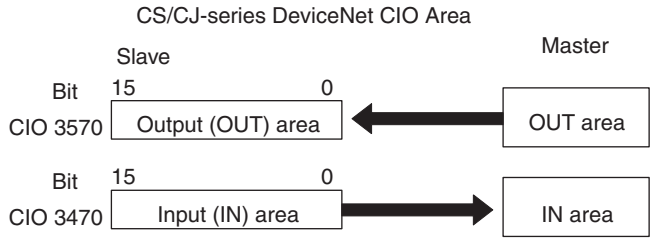

Fixed Allocation Area 3

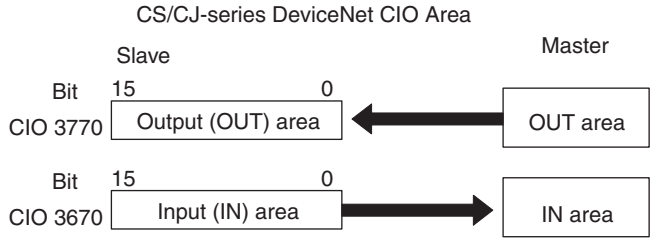

5-3 User-set Allocations

With a CS/CJ-series DeviceNet Unit, remote I/O communications slaves can be allocated in any area (CIO, WR, HR, DM, or EM) using one of the following methods.

- Setting through the allocated DM Area words (Slave User Allocations Table)
- Setting through the Configurator

User-set Allocations Methods

Method		Set through the allocated DM Area words (Master User Allocations Table)	Set through the Configurator
Allocation areas		CIO: 0000 to 6143 WR: W000 to W511 HR: HR000 to HR511 DM: D00000 to D32767 EM: E00000 to E32767 (Banks 0 to C)	
No. of allocation blocks		2 blocks: OUT 1 and IN 1	3 blocks: OUT 1, IN 1 and IN 2
Allocation size	Per block	100 words max.	
	Total size	200 words max. for a total of 2 blocks	300 words max. for a total of 3 blocks
Connection type		Automatic (connection specified by the master)	Automatic or user specified

Note 1. Functions will vary as shown below depending on whether allocations are set through the allocated DM Area words (Slave User Allocations Table) or through the Configurator.

2. Only two blocks (OUT 1 and IN 1) can be allocated when setting are made with the allocated DM Area words area, but there are three blocks (OUT 1 and IN 1/2) available with the Configurator.

Setting through the Allocated DM Area Words (Slave User Allocations Table)

Words can be allocated for the OUT 1 area (master to Slave Unit) and IN 1 area (Slave Unit to master) from any specified I/O memory location specified in the settings in the allocated DM area words.

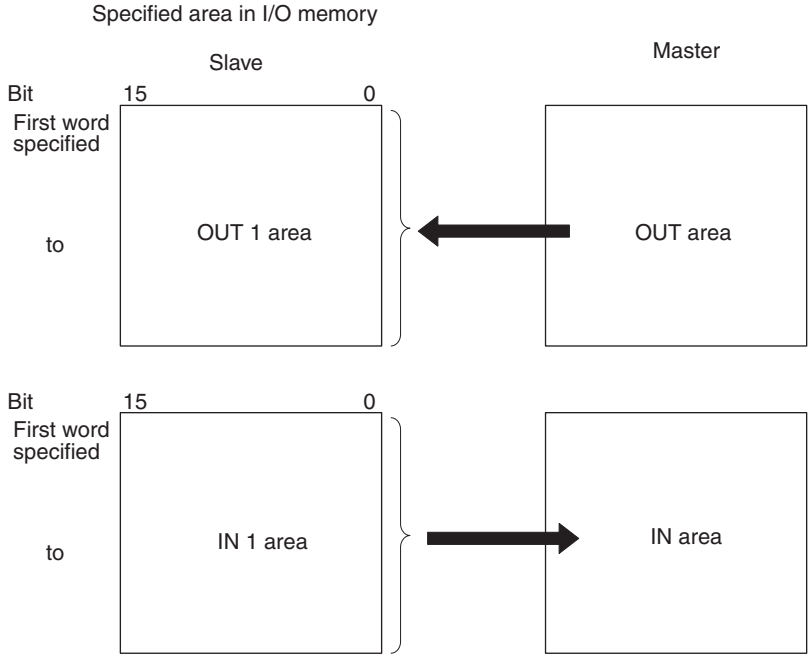

5-3-1 Connection Types

The type of connection cannot be specified when the allocated DM area words is used for settings. The master specifies a poll, bit-strobe, COS, or cyclic connection.

5-3-2 Procedure

Step 1: Stop Slave Communications

If the Unit is already functioning as a slave, turn ON the Slave Stop Switch (word n+1, bit 07) to stop slave communications. This step is not necessary if slave communications have already stopped.

Step 2: Set the Slave User Allocations Table

This table is used to specify the areas, first words, and sizes for OUT block 1 and IN block 1.

- **Slave User Allocations Table**

First word m = D30000 + (100 x unit number)

Allocated DM area words		Details	
Word m+8	Bits 00 to 07	Slave OUT 1 area	Select from following table
Word m+9	Bits 00 to 15	First word of the slave OUT 1 area	
Word m+10	Bits 00 to 07	Slave OUT 1 area size (in bytes)	
Word m+11	Bits 00 to 07	Slave IN 1 area	Select from following table
Word m+12	Bits 00 to 15	First word of the slave IN 1 area	
Word m+13	Bits 00 to 07	Slave IN 1 area size (in byte)	

- **Areas and Word Ranges for the OUT 1/IN 1 Areas**

Code	Name	Word range
00 Hex	---	The block is not used.
01 Hex	CIO Area (CIO)	0000 to 17FF Hex (0 to 6143)
03 Hex	DM Area (DM)	0000 to 7FFF Hex (0 to 32767)
04 Hex	Word Area (WR)	000 to 01FF Hex (0 to 511)
05 Hex	Holding Area (HR)	000 to 01FF Hex (0 to 511)
08 Hex to 14 Hex	Expansion Data Memory (EM) Bank 0 to C (13 banks)	0000 to 7FFF Hex (0 to 32767) for all banks

Step 3: Turn ON the Slave User Allocations Switch

Turn ON the Slave User Allocations Switch (word n+1, bit 11).

Step 4: Turn ON the Slave Enable Switch

Turn ON the Slave Enable Switch (word n+1, bit 06). This will allocated the above areas as slave areas and the DeviceNet Unit will start slave remote I/O communications.

Note Once slave communications are enabled by turning ON the Slave Enable Switch, the Unit will continue to perform slave communications even after the power is turned OFF and back ON again.

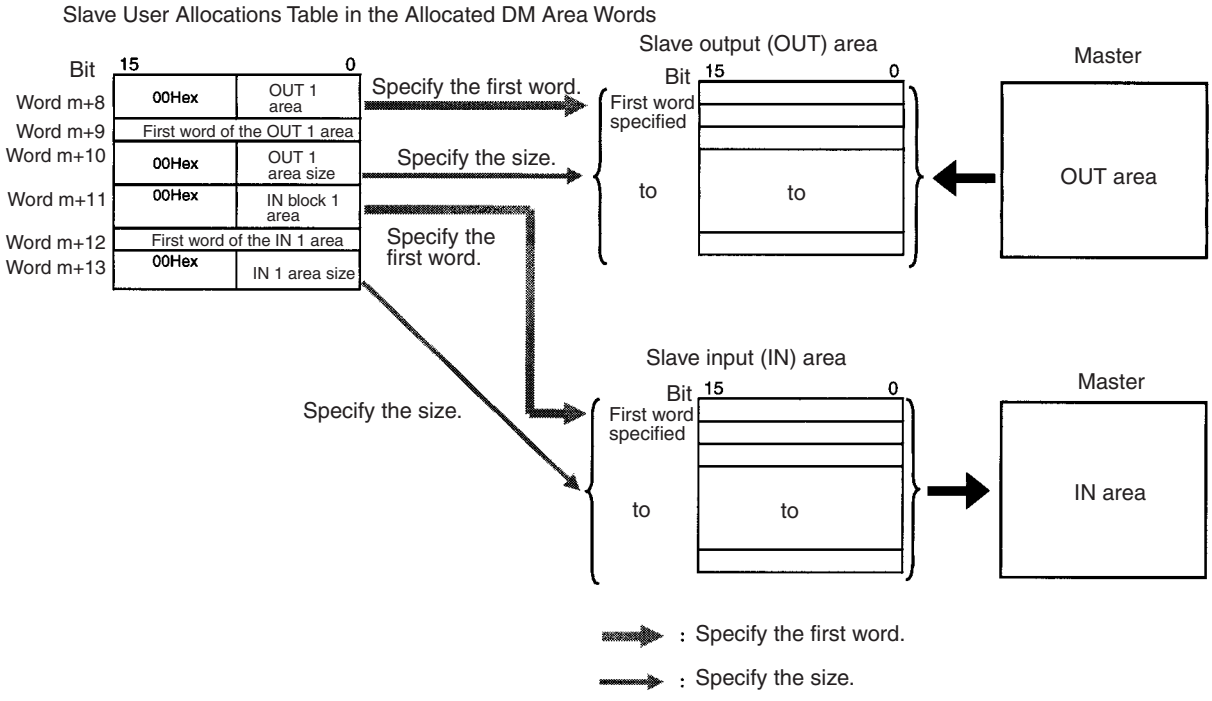

Example Settings for User-set Allocations through Allocated DM Area Words

This example uses the following settings for unit number 0.

- OUT block 1 area and first word: WR (04 Hex), 50 (0032 Hex), 20-byte size (14 Hex, 10 words)
- IN block 1 area and first word: WR (04 Hex), 100 (0064 Hex), 10-byte size (0A Hex, 5 words)

- **Slave User Allocations Table**

		15			00	
m+8 :	30008	0	0	0	4	OUT block 1 area: WR (04 Hex)
m+9 :	30009	0	0	3	2	First word of OUT block 1: 50 (0032 Hex)
m+10 :	30010	0	0	1	4	OUT block 1 size: 20 bytes (14 Hex, 10 words)
m+11 :	30011	0	0	0	4	IN block 1 area: WR (04 Hex)
m+12 :	30012	0	0	6	4	First word of IN block 1: 100 (0064 Hex)
m+13 :	30013	0	0	0	A	IN block 1 size: 10 bytes (0A Hex, 5 words)

- **Slave areas**

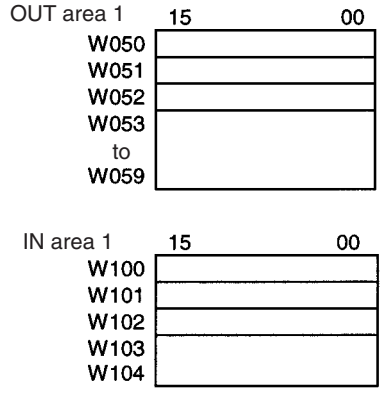

Step 1: Turn ON the Slave User Allocations Switch

Make sure that slave communications have stopped prior to performing this operation. Turn ON the Slave User Allocations Switch (word n+1, bit 11: CIO 150111 in this example). This will allocate the above areas as slave areas and the DeviceNet Unit will start slave remote I/O communications.

Step 2: Turn ON the Slave Enable Switch

Turn ON the Slave Enable Switch (word n+1, bit 06: CIO 150106 in this example). This will allocate the above areas as slave areas and the DeviceNet Unit will start slave remote I/O communications.

Setting through the Configuration

A maximum of three blocks can be allocated at any locations in I/O memory for the output (OUT) area block 1, input (IN) area block 1, and input (IN) area block 2.

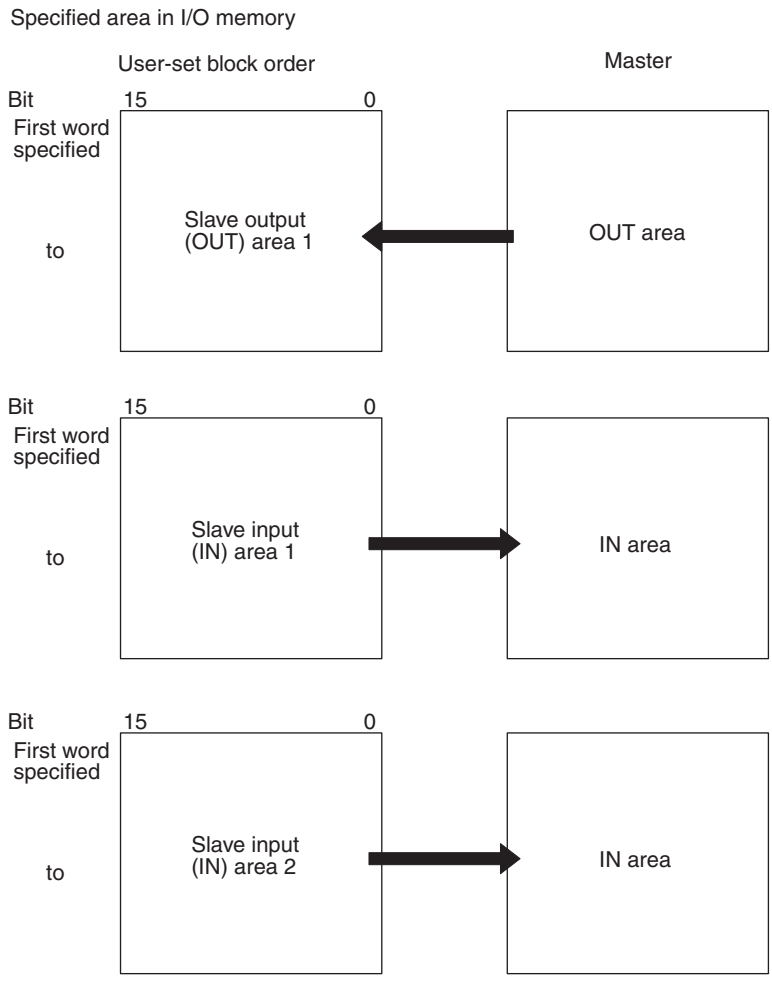

The block allocation order and block allocation areas can be set as required. Refer to the *DeviceNet Configurator Operation Manual* (W382) for details on the allocation procedure.

5-3-3 Connection Types

The type of connection can be specified if the Configurator is used for settings. The number of applicable allocation areas varies with the type of connection used.

- A maximum of three areas (OUT 1, IN 1, and IN 2) can be used when multiple connections are specified.
- Two allocation areas (OUT 1 and IN 1) can be used if the automatic connection setting or a single connection is specified.

Connection Types and Allocated I/O Areas

The following table shows the relationship between various connection combinations and the allocated areas that are applicable with those connections.

Specified connection type	OUT 1 area	IN 1 area	IN 2 area
Poll	Poll OUT data	Poll IN data	Not used
Bit-strobe	Not used	Bit-strobe IN data	Not used
COS	COS OUT data	COS IN data	Not used
Cyclic	Cyclic OUT data	Cyclic IN data	Not used
Poll+bit-strobe	Poll OUT data	Poll IN data	Bit-strobe IN data
Poll+COS (See note.)	Poll/COS OUT data	Poll IN data	COS IN data
Poll+cyclic (See note.)	Poll/cyclic OUT data	Poll IN data	Cyclic IN data
COS+bit-strobe	COS OUT data	COS IN data	Bit-strobe IN data
Cyclic+bit-strobe	Cyclic OUT data	Cyclic IN data	Bit-strobe IN data

Note

1. With poll + COS connections, the OUT data is the same for poll and COS. Set the same OUT areas for poll and COS connections when specifying the areas with the Configurator. With poll + cyclic connections as well, the OUT data is the same for poll and cyclic. Set the same OUT areas for poll and cyclic when specifying the areas with the Configurator.
2. Use the DeviceNet Configurator (version 2.10 or higher) as the Configurator for the CJ1W-DRM21.

SECTION 6
Message Communications

This section describes message communications using FINS commands sent from the ladder program in the CPU Unit of the PLC.

6-1 Overview 138
- 6-1-1 Outline of Message Communications. 138
- 6-1-2 FINS Message Communications 139
- 6-1-3 Explicit Message Communications 141
- 6-1-4 Message Communications Specifications 142
- 6-1-5 Message Communications Error Indications 143
- 6-1-6 Message Monitoring Timer 144
- 6-1-7 Message Communications Errors 144

6-2 FINS Commands and Responses 145
- 6-2-1 FINS Communications 145
- 6-2-2 Sending/Receiving FINS Command/Responses. 146
- 6-2-3 Units Supporting FINS Communications. 147
- 6-2-4 FINS Command Lists 147

6-3 Using FINS Message Communications 149
- 6-3-1 Setting Node Addresses 149
- 6-3-2 Creating Routing Tables 149
- 6-3-3 Data Send/Receive Instructions 152
- 6-3-4 Sending FINS Commands 154
- 6-3-5 Using SEND(090), RECV(098), and CMND(490) 155
- 6-3-6 Connecting Networks for FINS Communications 160

6-4 Sending Explicit Messages 161
- 6-4-1 Sending Explicit Messages 162
- 6-4-2 Sending Explicit Messages Using CMND(490). 164

6-5 Receiving Explicit Messages 168
- 6-5-1 List of PLC Object Services 169

6-1 Overview

Message communications enable messages to be set between nodes on a DeviceNet network when required by system conditions. The messages can be sent between PLCs, between an OMRON PLC and a master made by another company, or between slaves. They can be used to send/receive data; read time data, error histories, and other data; or control operation, e.g., by force-setting/resetting bits.

There are two types of messages: FINS messages and explicit messages.

6-1-1 Outline of Message Communications

Item	FINS messages	Explicit messages
Outline	Message communications for OMRON products that use the FINS protocol.	General-purpose message communications using the DeviceNet protocol.
Remote device	OMRON PLCs (with a CS/CJ-series DeviceNet Unit)	Other manufacturer masters or slaves. OMRON PLCs with C200H or CVM1/CV-series DeviceNet Master Unit or CS/CJ-series DeviceNet Units OMRON PLCs with C200H I/O Link Units
Features	Provide a greater range of services than explicit messages by sending and receiving FINS commands. Have message compatibility with other OMRON networks, such as Controller Link, SYSMAC LINK, and Ethernet (up to 3 levels)	Enable message communications with DeviceNet devices from other manufacturers. Can receive explicit messages from OMRON PLCs with C200H- or CVM1/CV-series DeviceNet Master Units and can send explicit messages to OMRON PLCs with C200H I/O Link Units

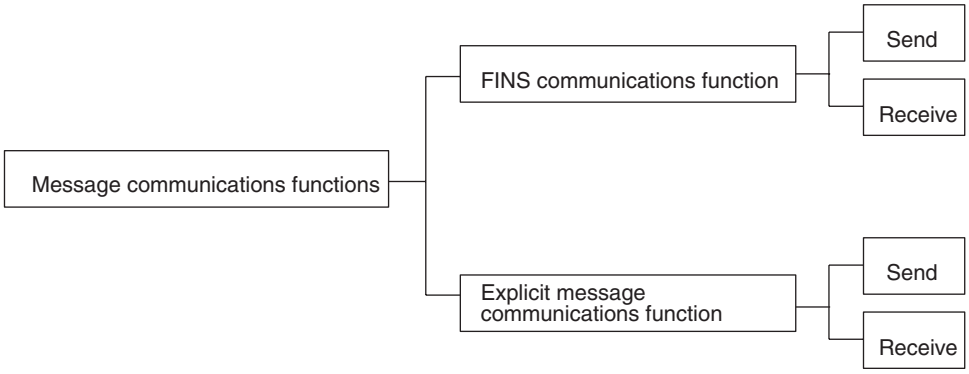

Overall Structure

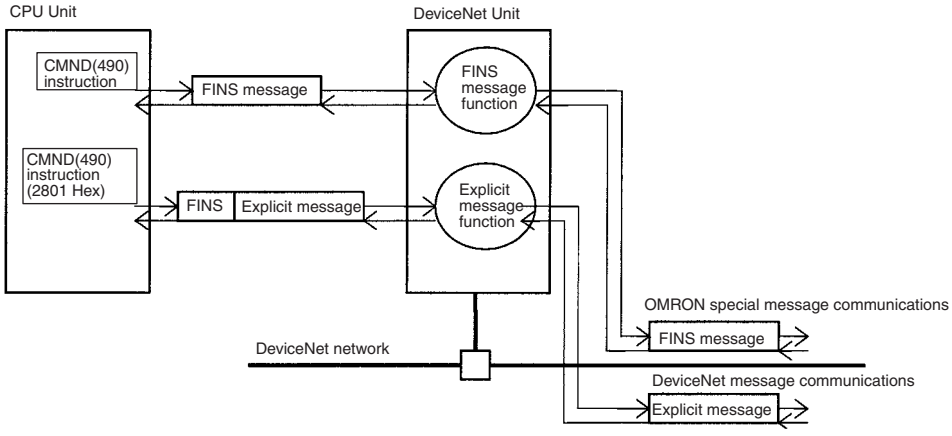

Note If only the message communications function is being used and the remote I/O communications function is not being used, message communications are possible even if the master function is disabled. In this case, it is not necessary to register a scan list.

6-1-2 FINS Message Communications

Messages can be exchanged using FINS commands between DeviceNet nodes (masters and/or slaves) that support FINS messages.

Type of FINS message	Data send/receive	FINS commands
Network communications instructions	**SEND/RECV instructions**	**CMND(490) instructions**
PLC to PLC (both must be CS/CJ-series PLCs with a CS/CJ-series DeviceNet Unit) (See note 1.) **Note** Inter-network communications is possible with other DeviceNet networks, Controller Link networks, or other networks. (See note 2.)	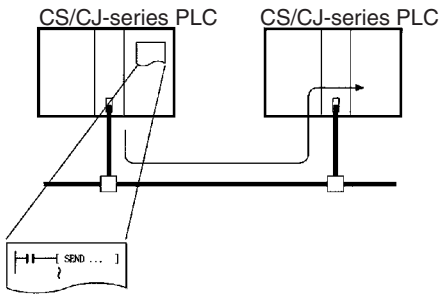	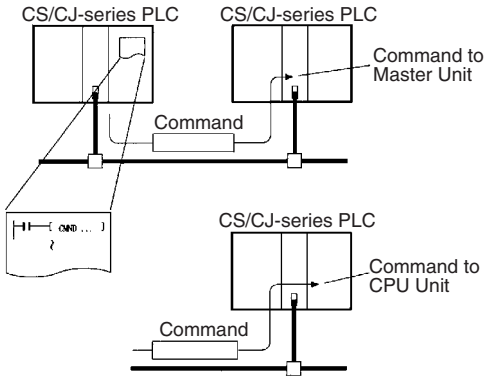
PLC to OMRON Slave	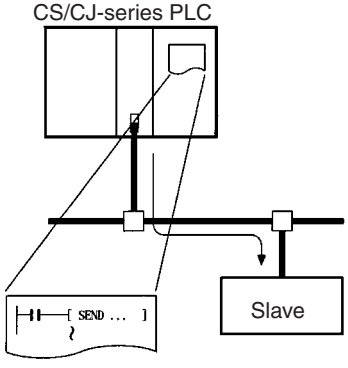	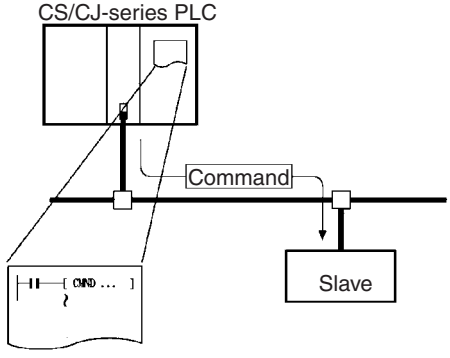
Data length (excluding command code)	SEND instruction: 267 words; RECV instruction: 269 words	542 bytes max.

Note 1. The DeviceNet Unit must be registered in the local network routing table of the CS/CJ-series PLC when two or more Communications Units (including the DeviceNet Unit) are mounted to a CS/CJ-series PLC. The commands will not be sent if the Unit is not registered in the routing tables.

2. For DeviceNet networks connected to a CS/CJ-series DeviceNet Unit, message communications can be conducted between networks, including other DeviceNet networks as well as Controller Link, SYSMAC LINK, and Ethernet networks. Up to three levels of networks can be crossed. Routing tables (containing local network tables and relay network tables) must be registered in the CPU Units of each PLC on the network.

Up to 3 network levels, including DeviceNet, can be crossed.

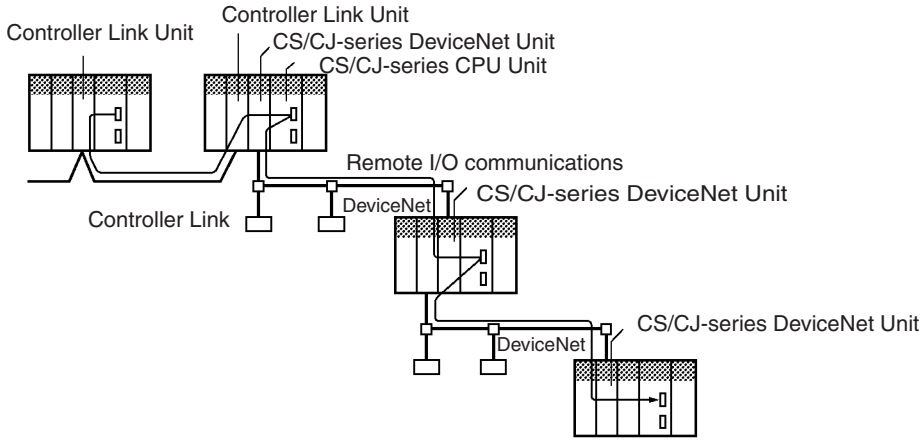

Note FINS commands sent and received by the CS/CJ-series DeviceNet Unit include commands addressed to the CS/CJ-series CPU Unit and commands addressed to the CS/CJ-series DeviceNet Unit.

FINS message communications is possible between two PLCs with CS1W-DRM21(-V1) or CJ1W-DRM21 DeviceNet Units.

FINS messages cannot be sent or received for PLCs with C200H-series DeviceNet Master Units (C200HW-DRM21-V1) or CVM1/CV-series DeviceNet Master Units (CVM1-DRM21-V1). Explicit messages, however, can be received from these PLCs.

The following table outlines which CPU Unit support for FINS message communications.

CPU Unit sending message	Mounted DeviceNet Unit/ DeviceNet Master Unit	FINS message		CPU Unit in receiving message				
				CS Series	CJ Series	CS Series	C200HX/ HG/HE	CVM1/CV Series
		Instructions to send/ receive data	Instructions to execute any FINS command	CS1W-DRM21 (-V1)	CJ1W-DRM21	C200HW-DRM21-V1	C200HW-DRM21-V1	CVM1-DRM21-V1
CS Series	CS1W-DRM211(-V1)	SEND/RECV	CMND	Can receive		Cannot receive	Cannot receive	Cannot receive
CJ Series	CJ1W-DRM21							
CS Series	C200HW-DRM21-V1	Not supported	IOWR	Cannot receive		Can receive	Can receive	Can receive
C200HX/ HG/HE	C200HW-DRM21-V1	Not supported	IOWR	Cannot receive		Can receive	Can receive	Can receive
CVM1/CV Series	CVM1-DRM21-V1	SEND/RECV	CMND	Cannot receive		Can receive	Can receive	Can receive

Sending FINS Message Communications

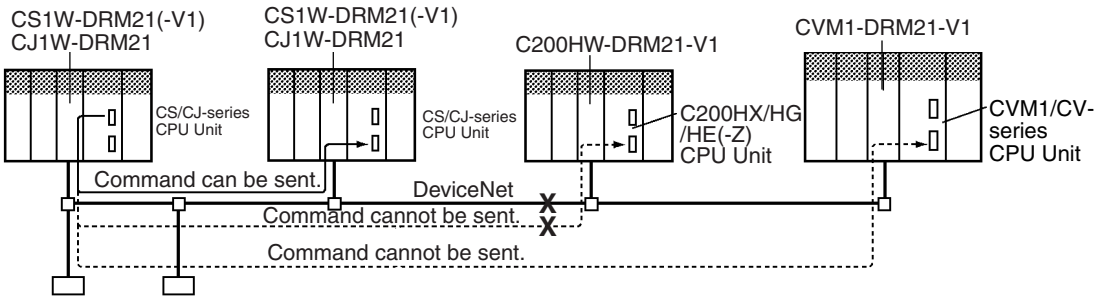

Receiving FINS Message Communications

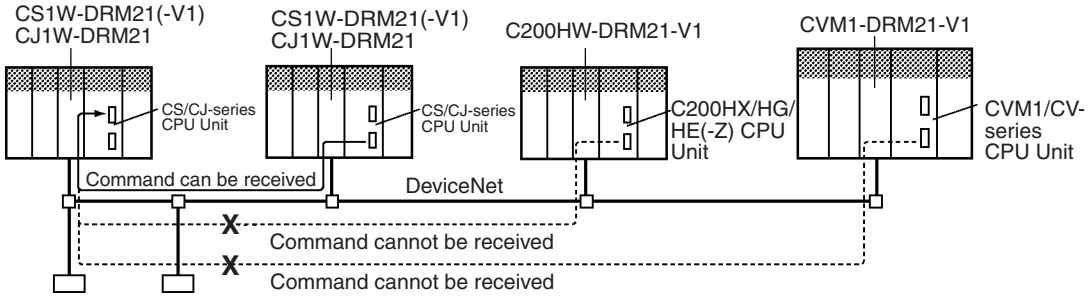

Note C200H-series DeviceNet Master Units (C200H-DRM21-V1) and CVM1/CV-series DeviceNet Master Units (CVM1-DRM21-V1) both support FINS message communications but it is executed by a special OMRON method. With this CS/CJ-series DeviceNet Unit (CS1W-DRM21(-V1) or CJ1W-DRM21), the standard message protocol for DeviceNet (i.e., explicit messages) has been used for FINS communications. For this reason, FINS communications is not possible between CS/CJ-series DeviceNet Units (CS1W-DRM21(-V1) or CJ1W-DRM21) and C200H-series DeviceNet Master Units (C200H-DRM21-V1) or CVM1/CV-series DeviceNet Master Units (CVM1-DRM21-V1).

6-1-3 Explicit Message Communications

Service requests can be sent to C200H I/O Link Units and other OMRON slaves, PLCs with CS/CJ-series DeviceNet Units, and DeviceNet masters and slaves made by other manufacturers using explicit messages defined for DeviceNet.

Service requests to read/write CPU Unit status I/O memory can also be received from PLCs with C200H-series DeviceNet Master Units (C200HW-DRM21-V1), PLCs with CVM1/CV-series DeviceNet Master Units (CVM1-DRM21-V1), PLCs with CS/CJ-series DeviceNet Units, and DeviceNet masters made by other manufacturers using explicit messages.

Note A specific FINS command (command 2801) is used to send explicit messages.

Item	Sending	Receiving
Network communications instruction	CMND(490) using FINS command code 2801 Hex can be used to send explicit messages to DeviceNet devices. (See note.)	Automatically responds to explicit messages from other devices.
Remote devices and supported functions	Masters/slaves made by other manufacturers. Supported services determine supported functions. PLCs with CS/CJ-series DeviceNet Units mounted. Remote CPU Unit status read/write and I/O memory read/write functions supported. PLCs with C200H I/O Link Units mounted. Remote CPU Unit I/O memory read/write function supported.	Masters made by other manufacturers. PLCs with CS/CJ-series DeviceNet Units. PLCs with C200H-series DeviceNet Master Units. PLCs with CVM1/CV-series DeviceNet Master Units. All listed devices support status read/write and I/O memory read/write for the local CPU Unit.

Note A specific FINS command (command 2801) is used to send explicit messages.

Note This CS/CJ-series DeviceNet Unit (CS1W-DRM21(-V1) or CJ1W-DRM21) contains a PLC Object so that the I/O memory of the CPU Unit of the DeviceNet Unit can be read/written from other devices. The C200HW-DRT21 I/O Link Unit also contains a PLC Object so that the I/O memory of the CPU Unit of the I/O Link Unit can be read/written from other devices. The C200HW-DRM21-V1 and CVM1-DRM21-V1 DeviceNet Master Units, however, do not have PLC Objects, the I/O memory of the CPU Unit for these Units cannot be read or written from other devices.

6-1-4 Message Communications Specifications

Item		Specification
Applicable PLC		CS/CJ-series
Unit model number		CS1W-DRM21(-V1)/CJ1W-DRM21
Max. No. of communications nodes per Unit	**FINS messages**	62 (node address 0 cannot be used for FINS communications)
	Explicit messages	63
Communications instructions	**Sending/receiving data**	SEND and RECV instructions
	FINS commands	CMND(490) instruction
		There are FINS commands addressed to the PLC and others addressed to the CS/CJ-series DeviceNet Unit. **Note** FINS commands can be sent to PLCs with CS/CJ-series DeviceNet Units mounted to them. FINS commands cannot be sent to PLCs with C200HW-DRM21-V1 or CVM1-DRM21-V1 DeviceNet Master Units mounted to them.
	Explicit DeviceNet messages	CMND(490) instruction
		Sends explicit messages to masters/slaves made by other manufacturers, PLCs with C200H I/O Link Units, or PLCs with CS/CJ-series DeviceNet Units mounted to them.
Sources: destinations		1:1 (Broadcasting is not supported)
Data length (excluding command code)		SEND: 267 words max. RECV: 269 words max. CMND 542 bytes max.

Item			Specification
No. of simultaneous instructions			One each for 8 ports (ports 0 to 7) Refer to *3-25 Network Instructions* in the *CS/CJ Series Programmable Controllers Instructions Reference Manual* (W340) for information on ports (logical ports).
Response monitoring time			Default setting: 2 s User setting: 0.1 to 6553.5 s
Retries			0 to 15
FINS message communications commands	**Received from CS/CJ-series CPU Unit with CS/CJ-series DeviceNet Unit**		Supported (Data send/receive or FINS commands).
	Received from CVM1/CV-series CPU Units with CVM1/CV-series DeviceNet Master Unit		Not supported.
	Received from CS/CJ-series and C200HX/HG/HE CPU Units with C200H-series DeviceNet Master Unit		
	Received from C200HX/HG/HE Units with C200H-series DeviceNet Master Unit		
Internetwork connections		**Same network type**	Supports internetwork communications between DeviceNet networks with CS/CJ-series DeviceNet Units mounted (up to 3 levels).
		Different network type	Supports internetwork communications between DeviceNet networks with CS/CJ-series DeviceNet Units mounted and other networks (Controller Link, SYSMAC LINK, and Ethernet; up to 3 levels).
Message monitor timer function (explicit message communications)			The response monitoring time for DeviceNet Units during explicit message communications (the interval the explicit connection is open) can be set from the Configurator for each device. (The settings for all devices can be stored in the DeviceNet Unit. This is called the Message Monitoring Timer List.)

6-1-5 Message Communications Error Indications

There are two ways to obtain information on communications errors that occur in message communications: 1) Using the error history in the DeviceNet Unit and 2) Using DeviceNet Unit displays, indicators, and Master Status Areas.

1,2,3...

1. Each time a communications error occurs, an error code is placed in an error record in the error history kept in the RAM of the DeviceNet Unit. Up to 96 records can be stored in the error history. The time and data the record occurred is also recorded.

The error history can be read or cleared from the CPU Unit by sending an FINS command to the DeviceNet Unit (Error History Read/Clear). The contents of the error history can also be monitored from the Configurator.

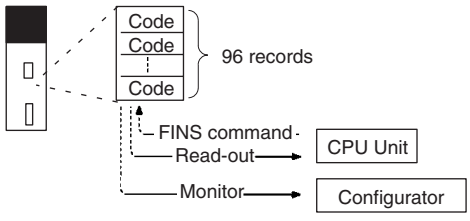

2. The MS and NS indicators and the 7-segment display on the front panel of the DeviceNet Unit can be used together with the Master Status Area 1 in the CPU Unit to obtain information on a communications error that has occurred. This information can be used as the basis for troubleshooting.

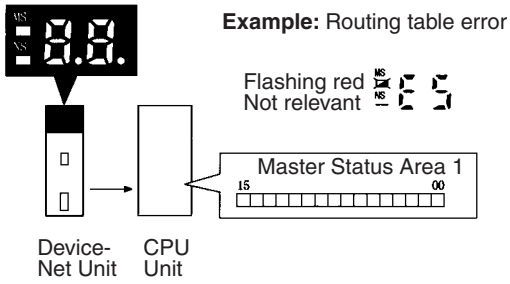

6-1-6 Message Monitoring Timer

A message monitoring timer monitors responses for the DeviceNet Unit. A timer can be set for each device that will be communicated with (each message destination).

Message monitoring timers are supported for both explicit message and FINS message communications. The timers can be set with version 2 or higher of the DeviceNet Configurator. The default setting is 2 seconds (2,000 ms). The setting range is 500 to 30,000 ms.

If the response from the remote communications device (message destination) is slow, the timer setting must be increased. In particular, responses take time in FINS message communications that cross different network layers, so this setting must be increased. The next message cannot be sent to the same communications device during the response waiting time, so the setting should not be set too high.

The DeviceNet Unit uses this timer to monitor message timeouts. The CPU Unit performs the monitoring based on the response monitoring time for CMND, SEND(090), and RECV instructions. There will be no effect, therefore, if either the message monitoring timer or the response monitoring time for CMND/SEND/RECV instructions setting only is increased or decreased. Both must be increased or decreased for there to be an effect.

Set the response monitoring time for the CMND, SEND(090), and RECV instructions the same as or longer than the message monitoring timer, i.e., CMND, SEND(090), RECV instructions ≥ message monitoring timer.

If a lot of timeouts occur, maintain this relationship but lengthen the time for both.

Note When performing remote programming or monitoring from the CX-Programmer (scheduled to be supported by version 2.1 and later), set the message monitoring timer in the CS/CJ-series DeviceNet Unit mounted to the PLC connected to the CX-Programmer to at least 20 s (20,000 ms). This setting is required only for the Unit that will perform remote programming.

6-1-7 Message Communications Errors

The following table shows the main errors that occur when messages are sent or received. Refer to *SECTION 9 Troubleshooting and Maintenance* for coun-

termeasures and errors recorded in error history that are not shown by the indicators.

Error	Indicators			Unit status 1 (word n+10)	Error history code (Hex)
	MS	NS	7-segment display		
Network power error	No change	Not lit	E0	Bit 07 turns ON.	0341
Send timeout			E2	Bit 08 turns ON.	0342
Routing table error	Flashing red	No change	HC	Bit 12 turns ON.	021A
Node address duplicated	No change	Lit red	F0	Bit 06 turns ON.	0211
Bus Off detected			F1	Bit 05 turns ON.	0340
CPU Unit service monitoring error	Flashing red	Not lit	HE	—	0002
Other CPU error			H7		0006
Local node not part of network; cannot send	No change	No change	No change	—	0101
No. of retries limit exceeded; cannot send					0103
Remote device busy; cannot send					0109
Header error; cannot send					0112
Reception buffer full; message destroyed					0117
Illegal message received; received message destroyed					0118
Local node busy; cannot send					0119

Note

1. The 7-segment display alternately displays the error and the master node address where the error occurred.
2. The send response message or reception response message will be destroyed if any of the following occur:
   - If any communications instructions (SEND(090), RECV(098), or CMND) are executed from the PLC at intervals less than the message communications time.
   - If messages are received from other nodes at intervals less than the message communications time.

   Be sure that the interval between sending messages (i.e., the interval for executing communications instructions from the PLC) and the interval for receiving messages at any one node are longer than the message communications time. Refer to *8-2 Message Communications* for details on the message communications time.

6-2 FINS Commands and Responses

6-2-1 FINS Communications

The FINS communication protocol was developed by OMRON for use with factory automation control devices. FINS communications enable PLC memory read/write and operation control without extensive programming in the user program in the PLC. FINS communications use an independent system of addresses that does not rely on the addresses used in the DeviceNet network. This enables communications not only with nodes on the DeviceNet network, but also with devices and PLCs connected via other FA networks, such as the SYSMAC NET and SYSMAC LINK Networks.

Refer to *SYSMAC CS/CJ Series Communication Commands Reference Manual* (W342) for details on FINS commands.

6-2-2 Sending/Receiving FINS Command/Responses

FINS commands are sent using the CMND(490) instruction for CS/CJ-series PLCs. Send/receive FINS commands and responses and the data formats used are illustrated in the following diagram. Unless otherwise specified, all data is hexadecimal.

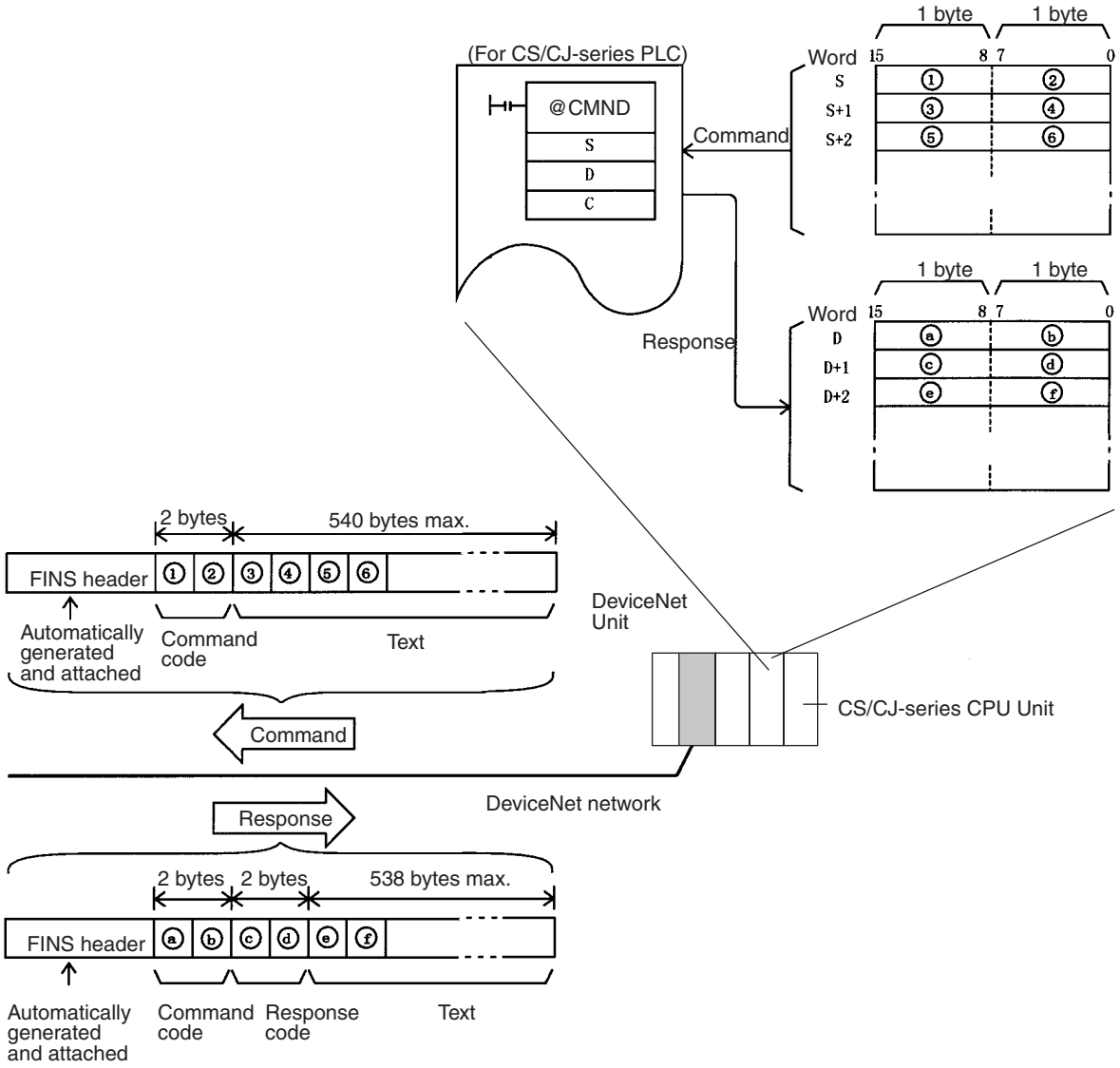

Command Codes

Command codes are represented by a 2-byte hexadecimal code. FINS commands always begin with a 2-byte command code and any parameters that are required follow the command code.

Response Codes

Response codes are represented by a 2-byte hexadecimal code that indicates the results of command execution. The first byte provides the main response code (MRES), which classifies the results, and the second byte provides the sub-response code (SRES), which provides details on the results.

The main response codes are listed below. Refer to *SYSMAC CS/CJ Series Communication Commands Reference Manual* (W342) for further details on response codes, including sub-response codes (SRES).

Main code	Main code
00: Normal completion	20: Read not possible
01: Local node error	21: Write not possible
02: Destination node error	22: Not executable in current mode
03: Communications controller error	23: No Unit
04: Unsupported setting error (service not supported)	24: Start/stop not possible
05: Routing error	25: Unit error
10: Command format error	26: Command error
11: Parameter error	30: Access right error
	40: Abort

6-2-3 Units Supporting FINS Communications

The parameters used for FINS commands depend on the Unit that is processing the command. Command details are provided in *Appendix E FINS Commands and Responses for DeviceNet Units* for commands and responses addressed to DeviceNet Units.

Refer to *SYSMAC CS/CJ Series Communication Commands Reference Manual* (W342) for information on commands and responses addressed to CS/CJ-series CPU Units.

6-2-4 FINS Command Lists

Commands Addressed to CS/CJ-series CPU Units

Function	Name	Command code	
Manipulating data in data areas and force-setting/resetting bits: CIO Area, DM Area, EM Area, Timer/Counter Area, Transition Area, Step Area	MEMORY AREA READ	01	01
	MEMORY AREA WRITE		02
	MEMORY AREA FILL		03
	MULTIPLE MEMORY AREA READ		04
	MEMORY AREA TRANSFER		05
Manipulating parameters: PLC Setups, I/O tables, routing tables, etc.	PARAMETER AREA READ	02	01
	PARAMETER AREA WRITE		02
	PARAMETER AREA CLEAR		03
Manipulating program areas	PROGRAM AREA READ	03	06
	PROGRAM AREA WRITE		07
	PROGRAM AREA CLEAR		08
Controlling operation	RUN (RUN, DEBUG, MONITOR modes)	04	01
	STOP (PROGRAM mode)		02
Reading PLC model information	CONTROLLER DATA READ	05	01
	CONNECTION DATA READ		02
Reading PLC status	CONTROLLER STATUS READ	06	01
	CYCLE TIME READ		20
Manipulating the PLC clock	CLOCK READ	07	01
	CLOCK WRITE		02
Manipulating messages	MESSAGE READ	09	20
	MESSAGE CLEAR		
	FAL/FALS READ		

Function	Name	Command code	
Controlling access rights	ACCESS RIGHT ACQUIRE	0C	01
	ACCESS RIGHT FORCED ACQUIRE		02
	ACCESS RIGHT RELEASE		03
Manipulating error data	ERROR CLEAR	21	01
	ERROR LOG READ		02
	ERROR LOG CLEAR		03
Manipulating File Memory	FILE NAME READ	22	01
	SINGLE FILE READ		02
	SINGLE FILE WRITE		03
	MEMORY CARD FORMAT		04
	FILE DELETE		05
	VOLUME LABEL CREATE/DELETE		06
	FILE COPY		07
	FILE NAME CHANGE		08
	MEMORY AREA FILE TRANSFER		0A
	PARAMETER AREA FILE TRANSFER		0B
	PROGRAM AREA FILE TRANSFER		0C
	CREATE/DELETE DIRECTORY		15
Force-setting/resetting bits	FORCED SET/RESET	23	01
	FORCED SET/RESET CANCEL		02

Refer to *SYSMAC CS/CJ Series Communication Commands Reference Manual* (W342) for information on FINS commands addressed to CS/CJ-series PLCs.

Commands Addressed to DeviceNet Units

Name	Command code		Page
RESET	04	03	247
CONTROLLER DATA READ	05	01	247
CONTROLLER STATUS READ	06	01	248
ECHOBACK TEST	08	01	249
ERROR LOG READ	21	02	250
ERROR LOG CLEAR		03	251

Command to Send Explicit DeviceNet Messages

Name	Command code		Page
EXPLICIT MESSAGE SEND	28	01	263

6-3 Using FINS Message Communications

There are two instructions that can be executed to send and receive data from CS/CJ-series CPU Units: SEND(090) and RECV(098). There is another instruction that can be executed to send any FINS command: CMND(490).

6-3-1 Setting Node Addresses

Set the nodes for FINS message communications to node addresses other than 0. Node address 0 has a special meaning (local node) in message communications. If 0 is set as a node address for the Unit, message communications will not be possible.

6-3-2 Creating Routing Tables

The DeviceNet Unit functions as a Communications Unit in the same way as the SYSMAC LINK Unit, Controller Link Unit, and Ethernet Unit.

It is therefore necessary to create routing tables for the communications functions to be used, as shown in the table below.

<table>
<tr><th>Mounted Units</th><th>Using master or slave functions only</th><th>Using explicit message communications (not supported across networks)</th><th>Using FINS message communications not across networks</th><th>Using FINS message communications across networks</th></tr>
<tr><td>DeviceNet is the only Communications Unit mounted</td><td colspan="3">Not necessary (See note 1.)</td><td rowspan="3">Local network table (See note 2.) and relay network table are necessary.</td></tr>
<tr><td>Multiple DeviceNet Units mounted as Communications Units</td><td>Not necessary (See note 1.)</td><td colspan="2">Local network table necessary (See note 2.)</td></tr>
<tr><td>DeviceNet Unit and other Communications Unit mounted simultaneously</td><td colspan="3">Local network table necessary (See note 2.)</td></tr>
</table>

Note

1. If a local network table already exists in the CPU unit being used, the DeviceNet Unit must be registered in that table.
2. The DeviceNet Unit must be registered in the local network table.
3. In all cases other than the following two exceptions, a local network table must be made, and the DeviceNet Unit must be registered in it.
   a) When there is only one DeviceNet Unit.
   b) When only multiple DeviceNet Units are mounted, with no remote I/O communications.
4. A local network table is sometimes necessary even when the DeviceNet Unit is not operating across networks.
5. If you prepare a local network table inside the CPU Unit, be sure to register the DeviceNet Unit.
6. Even if a local network table exists inside the CPU Unit, the 7-segment display of the DeviceNet Unit may indicate “HC” and FINS message/explicit message communications may not be possible unless the DeviceNet Unit is registered in the local network table.

Routing Tables

The routing tables register the communications path from a Communications Unit on the local PLC, such as a DeviceNet Unit, Controller Link Unit, SYSMAC LINK Unit, or Ethernet Unit, to the network to which the remote PLC is connected. The routing tables are made up of two tables, the local network table and the relay network table, as described below.

Local Network Tables

The local network table lists the unit numbers of the Communications Units mounted to the PLC and the addresses of the Networks to which each Unit belongs. If multiple Communications Units are mounted to one PLC CPU Unit, the local network table is used to distinguish between network addresses.

The following type of table is used to show which Communications Unit data must be sent through to reach a destination network address, when sending data to a network address from one PLC's CPU Unit.

Local Network Address	CPU Bus Unit's unit number

Local network: The address (1 to 127) of the network to which the Communications Unit belongs.

CPU Bus Unit's unit number: The unit number of the CPU Bus Unit.

Example

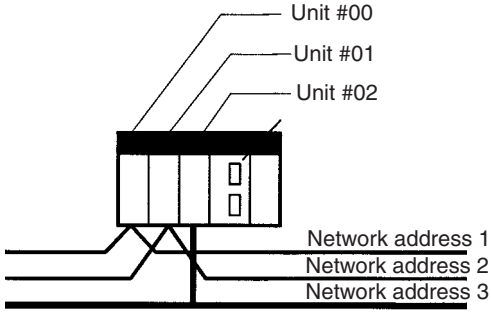

Local Network Table

Address of local network	CPU Bus Unit's unit number
1	00
2	01
3	02

The unit number of the DeviceNet Unit as a CPU Bus Unit is the number set on the rotary switches on the front panel (0 to 15). The network address is the address of the Network to which the CPU Bus Unit is connected (1 to 127). The network address is specified when this local network table for the routing table is created.

Relay Network Tables

Relay network tables show the destination network (final network) and the network and node address of the first relay point on the way to that network (the first point to which communications are sent). The relay points are followed on the way to the final network.

Final Network Address	Relay Network Address	Relay Node Address

Final network address: The address of the final network (1 to 127).

Relay network address: The address of the network to which the first relay point belongs (1 to 127).

Relay node address: The node address of the first relay point.

Procedure for Creating the Routing Table

Use the CX-Net function for creating/sending routing tables in the CX-Programmer, with the following procedure.

1. Select ***Start/Program/Omron/CX-Server/CX-Net Network Configuration Tool*** to start the CX-Net.
2. Select ***Edit/FINS Local*** from the **Routing Table** Menu. The following PLC Routing Table Window will appear.

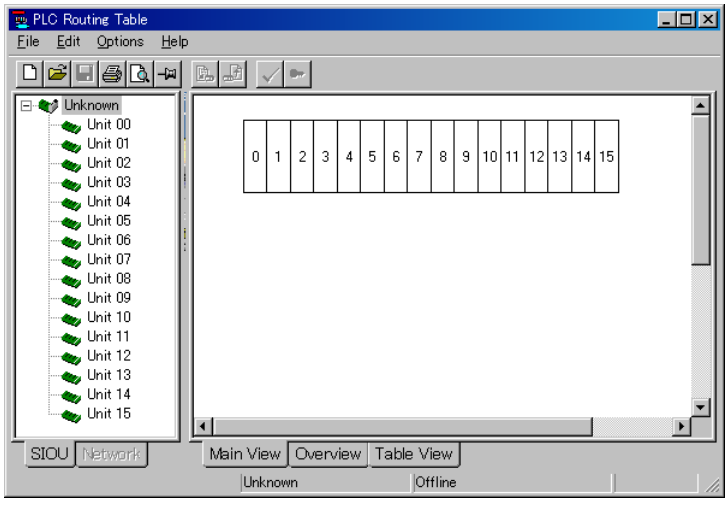

3. Click on the **Table View** Tab. A table like that shown below will appear.

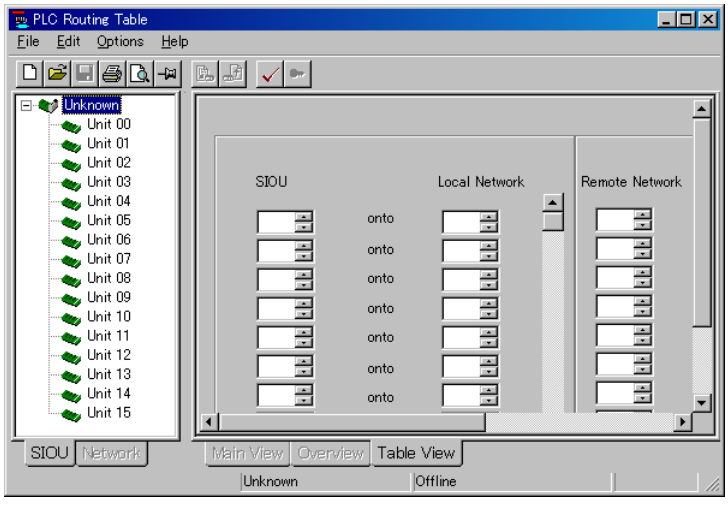

4. Use the left-side table to create the local network table. Input the unit numbers and corresponding local network addresses.
5. Use the right-side table to create the relay network table. Input the final network addresses and corresponding relay network addresses and relay node addresses.
6. Save the finished routing table.
7. Go online, then load and send the routing table.

Note Use CX-Programmer Ver. 2.1 or higher to register the DeviceNet Unit in the routing tables. Actually, registration is possible using versions prior to CX-Programmer Ver. 2.0, but "DeviceNet" will not be displayed in the list of network types when creating the routing tables with CX-Net. In this case, select one of the network types that are displayed (CLK, SLK, etc.). This will enable the DeviceNet to be registered in the routing table.

6-3-3 Data Send/Receive Instructions

NETWORK SEND: SEND(090)

Description

SEND(090) transfers data beginning at word S in the local PLC to addresses beginning at D at the designated node on the designated Network.

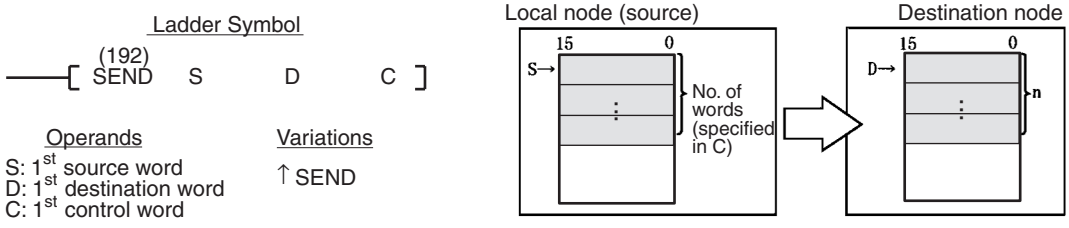

Control Data

The control data depends on the destination. The following information is for DeviceNet networks.

Word	Bits 00 to 07	Bits 08 to 15
C	Number of words: 1 to 267 words ($0001 to $010B)	
C+1	Destination network address (0 to 127, i.e., $01 to $7F, 0 = local network)	Set to 0.
C+2	Destination unit address (See note 1.)	Destination node address (See note 2.)
C+3	Bits 00 to 03: No. of retries (0 to 15, i.e., $0 to $F) Bits 04 to 07: Set to 0.	Bits 08 to 10: Transmission port number ($0 to $7) Bit 11 to 14: Set to 0. Bit 15: ON: No response. OFF: Response returned.
C+4	Response monitoring time ($0001 to $FFFF = 0.1 to 6553.5 seconds) (See note 3.)	

Note 1. Indicates a Unit as shown in the following table.

Unit	Setting
CPU Unit	00
User program in FA computer	01
CPU Bus Unit	$10 to $1F: Unit numbers 0 to 15 $FE: The local Unit

2. Values of $00 to $3F indicate nodes 0 to 63.
3. Designates the length of time that the PLC retries transmission when bit 15 of C+3 is OFF and no response is received. The default value is $0000, which indicates 2 seconds.

NETWORK RECEIVE: RECV(098)

Description

RECV(098) transfers data beginning at word S from the designated node on the designated Network to addresses beginning at D at the local node.

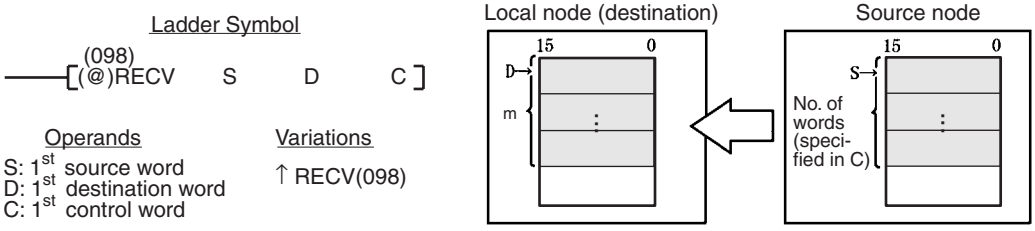

Control Data

The control data depends on the source node. The following information is for DeviceNet Networks.

Word	Bits 00 to 07	Bits 08 to 15
C	Number of words: 1 to 269, i.e., $0001 to $010D)	
C+1	Source network address (0 to 127, i.e., $00 to $7F, 0 = local network)	Set to 0.
C+2	Source unit address (See note 1.)	Source node address (See note 2.)
C+3	Bits 00 to 03: No. of retries (0 to 15 in hexadecimal, i.e., $0 to $F) Bits 04 to 07: Set to 0.	Bits 08 to 10: Transmission port number ($0 to $7) Bit 11 to 14: Set to 0. Bit 15: ON: No response. OFF: Response returned.
C+4	Response monitoring time ($0001 to $FFFF = 0.1 to 6553.5 seconds) (See note 3.)	

Note

1. Indicates a Unit as shown in the following table.

Unit	Setting
CPU Unit	00
User program in FA computer	01
CPU Bus Unit	$10 to $1F: Unit numbers 0 to 15 $FE: The local Unit

2. Values of $00 to $3E indicate nodes 0 to 63.
3. Designates the length of time in (0.1-s units) that the PLC retries transmission when bit 15 of C+3 is OFF and no response is received. The default value is $0000, which indicates 2 seconds. If baud rate is slow and the response monitoring time is short, an error may occur.

6-3-4 Sending FINS Commands

DELIVER COMMAND: CMND(490)

Description

CMND(490) can be used in the user program of the CS/CJ-series CPU Unit to send FINS commands to read/write I/O memory, read status data, change the operating mode, and perform other functions at other nodes.

CMND(490) transmits the command beginning at word S to the designated Unit at the destination node address in the designated network, and receives the response beginning at word D.

Ladder Symbol

(490)
(@)CMND S D C

Operands
S: 1st command word
D: 1st response word
C: 1st control word

Variations
↑ CMND(490)

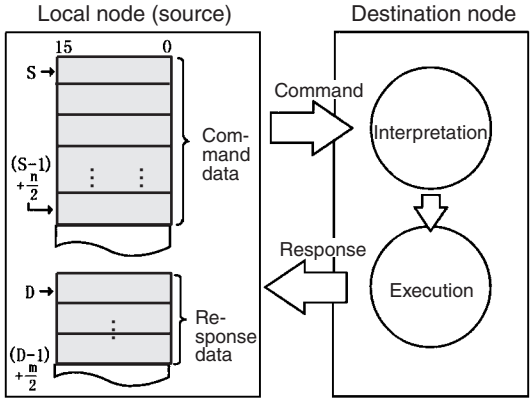

Word	Bits 00 to 07	Bits 08 to 15
C	Number of command bytes to send: 0 to 542 (i.e., $0000 to $021E)	
C+1	Number of response bytes to receive: 0 to 542 (i.e., $0000 to $021E)	
C+2	Destination network address (0 to 127, i.e., $00 to $7F, 0 = local network)	Set to 0.
C+3	Destination unit FINS address (See note 1.)	Destination node address (See note 2.)
C+4	Bits 00 to 03: No. of retries (0 to 15, i.e., $0 to $F) Bits 04 to 07: Set to 0.	Bits 08 to 10: Transmission port number ($0 to $7) Bit 11 to 14: Set to 0. Bit 15: ON: No response. OFF: Response returned.
C+5	Response monitoring time ($0001 to $FFFF = 0.1 to 6553.5 seconds) (See note 3.)	

Note

1. Indicates a Unit as shown in the following table.

Unit	Setting
CPU Unit	00
User program in FA computer	01
CPU Bus Unit	$10 to $1F: Unit numbers 0 to 15 $FE: The local Unit

2. Values of $00 to $3E indicate nodes 0 to 63.
3. Designates the length of time in (0.1-s units) that the PLC retries transmission when bit 15 of C+3 is OFF and no response is received. The default value is $0000, which indicates 2 seconds. If baud rate is slow and the response monitoring time is short, an error may occur.

Note Explicit messages can be sent to OMRON slaves and DeviceNet devices made by other manufacturers by setting the FINS command code to 28 01. When this is done, set the response monitoring time in C+5 to at least the value set for the message monitoring timer (default: 2 s). If it is set to less than the value for the message monitoring timer (default:2 s), communications may be busy even if the next command is executed after the first one times out.

6-3-5 Using SEND(090), RECV(098), and CMND(490)

SEND(090), RECV(098), and CMND(490) instructions normally use an AND of the Network Enabled Flag in the CPU Unit (A20200 to A2020007 corresponding to ports 0 to 7) and the Online Flag (word n+11, bit 00) (or the Message Communications Permitted Flag (word n+24, bit 12)) for the DeviceNet Unit.

Note The Online Flag and the Message Communication Permitted Flag perform the same operation.

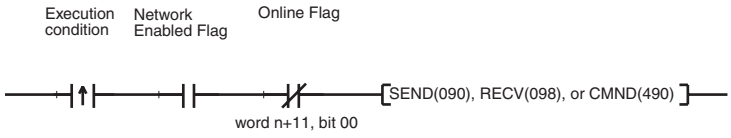

or

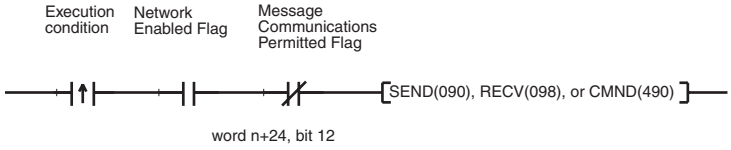

Communications Flags

Type	Name	Address		Content
		Word	Bit	
CPU Unit	Network Enabled Flag	A202	7 6 5 4 3 2 1 0 Port 7 Port 6 Port 5 Port 4 Port 3 Port 2 Port 1 Port 0	0: Execution not possible (executing) 1: Execution possible (not executing)
	Network Error Flag	A219	7 6 5 4 3 2 1 0 Port 7 Port 6 Port 5 Port 4 Port 3 Port 2 Port 1 Port 0	0: Normal completion 1: Error

Communications Flag Operation

- The Network Enabled Flag turns OFF when instructions are being sent or received (from when the instruction is issued until the response is received) and turns ON when the execution has been completed, whether normally or with an error.
- The Network Error Flag maintains its status until the next send or receive is executed.
- The Network Error Flag turns OFF when the next communications instruction is executed, regardless of whether the previous execution ended with an error.
- The relationship between the Message Communications Permitted Flag and the NS indicator and between the Message Communications Permit-

ted Flag and the NS indicators on the front of the DeviceNet Unit is shown in the following table.

Message Communications Permitted Flag	Network status	NS indicator
ON	Communications connection made (network normal)	Lit green
	Communications connection not made (network normal, but communications not established)	Flashing green
	Non-fatal communications error (error in one or more Slaves)	Flashing red
OFF	Offline or power supply is OFF (no power supply, resetting, minor failure, or send error)	Not lit
	Fatal communications error	Lit red

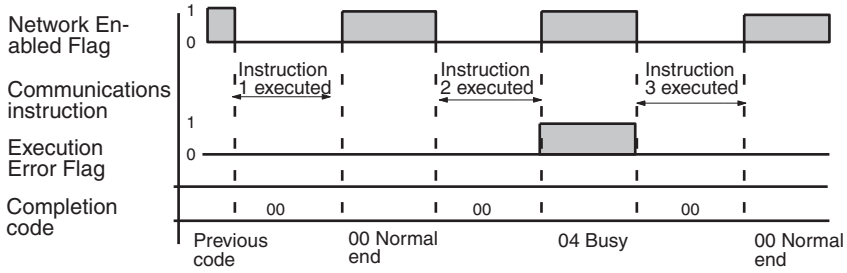

Communications Instructions Completion Codes

The status at the completion of the execution of network communications instructions is shown at the words indicated in the following table, as FINS completion codes. During execution of the instructions the status will be 00 or $0000 and this will be reflected at the end of the execution of the network communications instruction.

Words	Functions
Port #0 to #7 Completion Codes (A203 to A210)	A203 to A210 contain the completion codes for the results of communications instruction execution for ports #0 to #7, respectively.

Note For the CS/CJ-series, the completion codes are stored as 2 bytes of data (1 word) upon completion of the execution of SEND(090), RECV(098), and CMND(490). These codes are the same as the response codes for FINS commands. The first byte of the completion code is placed in bits 08 to 15 and the second byte is placed in bits 00 to 07.

Timing of Reading Responses

Responses should be read on the rising edge (upward differentiation) of the Network Enabled Flag, as shown in the following diagram.

Send/Receive Data Areas

The size of the data areas that can be used with SEND and RECV depends on the PLC that is being used. The following table shows the areas that can be used for CS/CJ-series PLCs.

Data Area	Range
CIO Area	CIO 0000 to CIO 6143
Work Area WR	W000 to W511
Holding Area	H000 to H511
Auxiliary Area	A000 to A959 (See note 3.)
Timer Area	T0000 to T4095
Counter Area	C0000 to C4095
DM Area	D00000 to D32767
EM Area	E00000 to E32767 (See note 2.)

Note

1. A000 to A477 in the Auxiliary Area are write-protected.
2. There can be up to 13 banks of EM Memory. Refer to the operation manual for the CPU Unit for information on whether it has EM Memory and how many banks can be used.
3. Do not exceed the boundary of the data areas for the PLC you are using.

Programming Examples

Example 1: Sending Data Using SEND

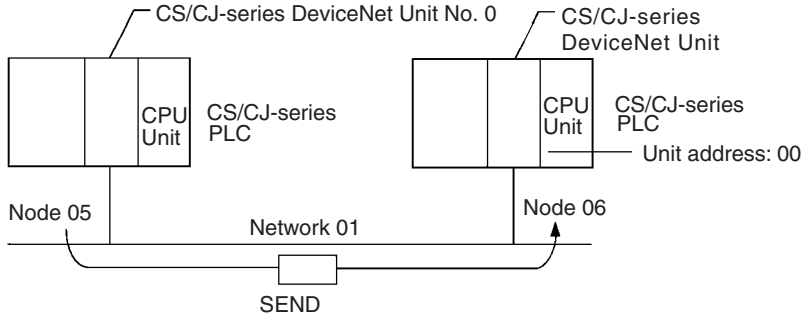

Operation

- The data from the 5 words D01000 to D01004 from the PLC with DeviceNet Unit 1 with node address 05 are sent to D03000 to D03004 in the PLC with DeviceNet Unit 2 with node address 06.
- The completion code is stored in D00006 when execution of SEND has been completed.

Command Details

The following command is used: [SEND S D C]

S = D01000: First source word at local (source) node
D = D03000: First destination word at destination node
C = D00000: First control word; settings are given below (Hex).

D00000 = 0005: Number of words to send
D00001 = 0001: Destination network address
D00002 = 0600: Destination node address (06)
Destination unit address (00 = CPU Unit)
D00003 = 0000: Response, communications port 0, no retries
D00004 = 0064: Response monitoring time

Program Example

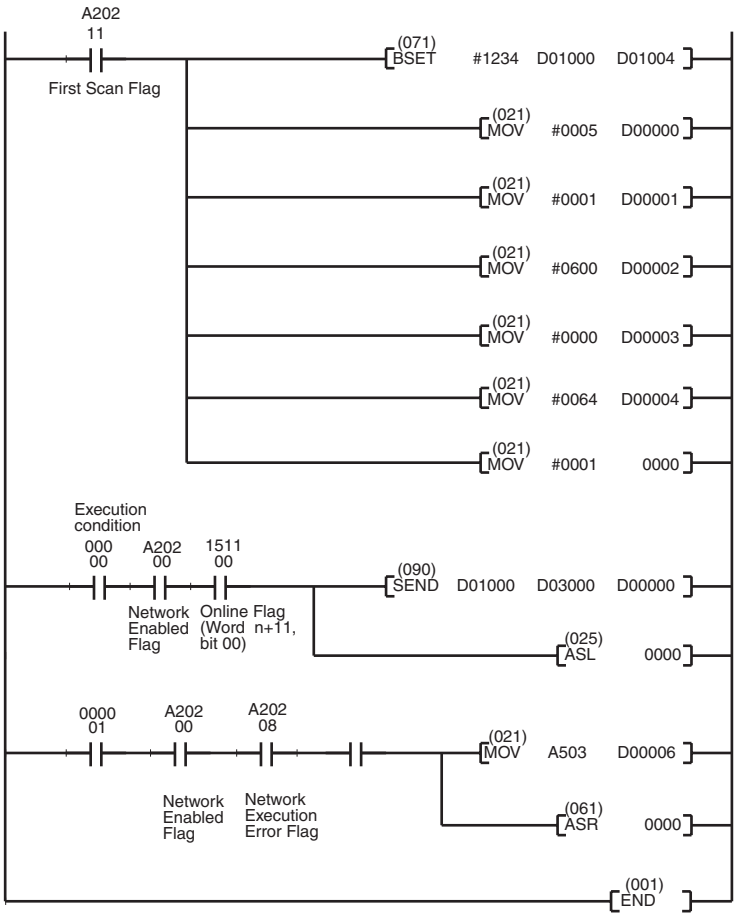

Sets 1234 in D01000 to D01004.

Places data into control data words to specify the 5 words to be transmitted to the CPU Unit of node 06 of network 01, through port 0, with response, 0 retries, and a response monitoring time of 10.0 seconds.

Places 0001 into CIO 0000

Transfers 5 words of data from D01000 to D01004 from the PLC of node 05 to D03000 to D03004 in the PLC of node 06.

Shifts the contents of CIO 0000 one bit to the left.

Stores the completion code in A203 to D00006.

Shifts the contents of CIO 0000 one bit to the right and retries the next cycle (CIO 000000 ON).

Example 2: Sending a FINS Command Using CMND

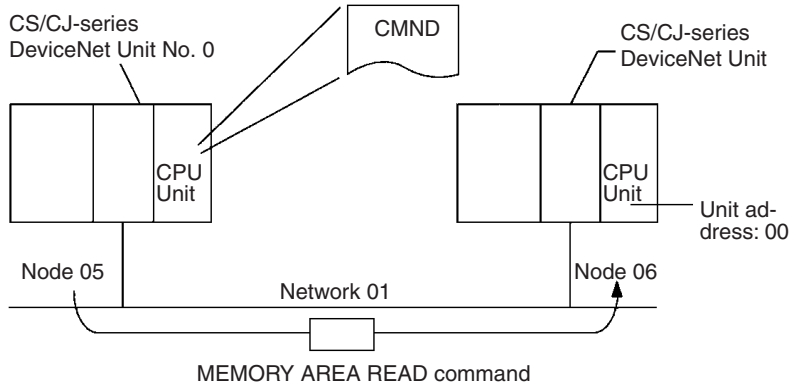

Operation

- The PLC with DeviceNet Unit 1 with node address 5 reads the data from the 5 words D01000 to D01004 from the PLC with DeviceNet Unit 2 with node address 06.
- The MEMORY AREA READ command (01 01) is used to read variable data.
- Command data is written starting from D01000 in the PLC with DeviceNet Unit 1 with node address 5 and the response data is written starting from D02000.
- The completion code is stored in D00006 when execution of SEND has been completed.

Command Details

The following command is used: [CMND S D C]

S = D01000: First command word at local node
Settings (Hex)
D01000 = 0101: Command Code
D01001 = 8203: Command parameters
D01002 = E800: Command parameters
D01003 = 0005: Command parameters

D = D02000: First response word at local node
C = D00000: First control word
Settings (Hex).
D00000 = 0008: Number of command bytes
D00001 = 000E: Number of response bytes
D00002 = 0001: Destination network address
D00003 = 0600: Destination node address (06)
Destination unit address (00 = CPU Unit)
D00004 = 0000: Response, communications port 0, no retries
D00005 = 0064: Response monitoring time

Example Program

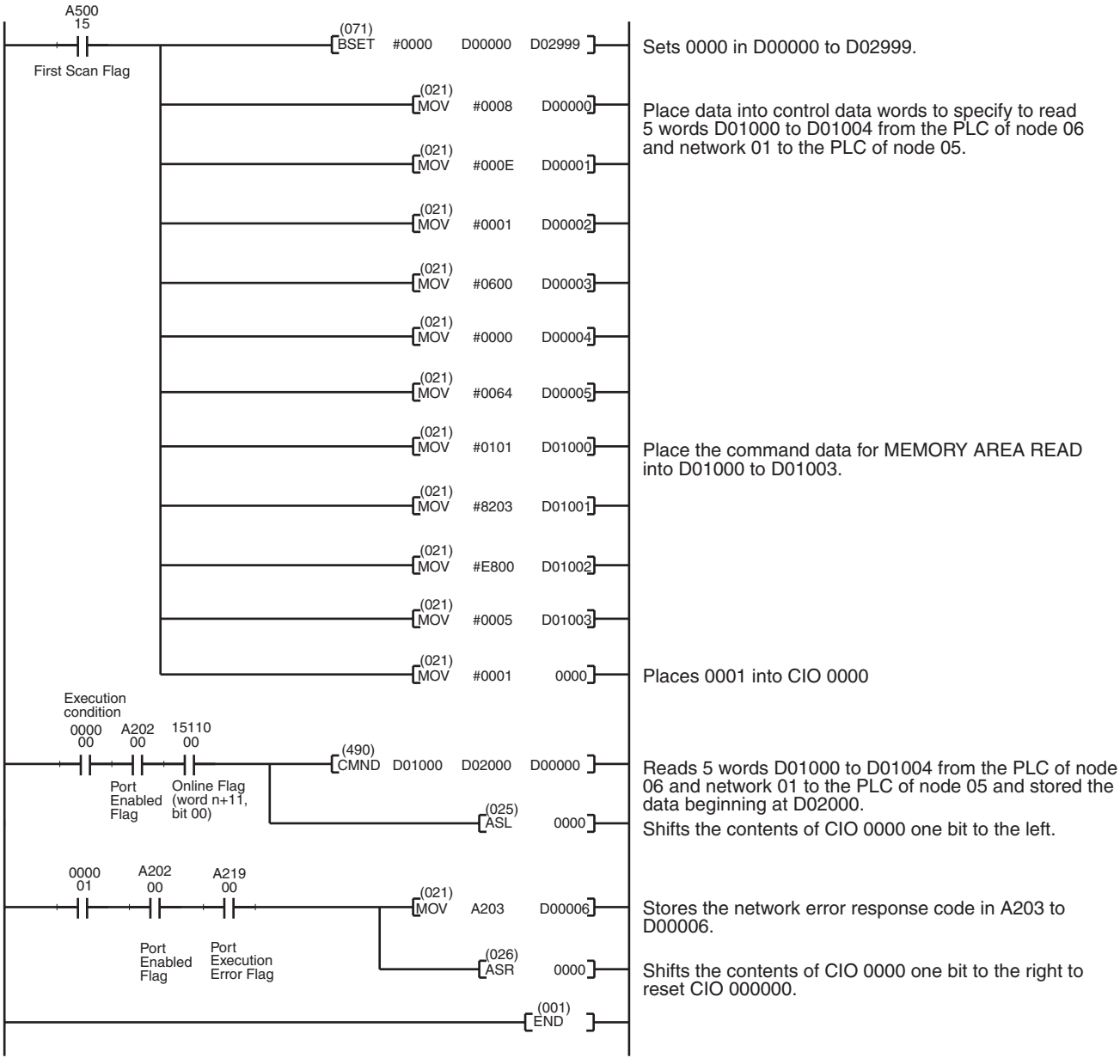

6-3-6 Connecting Networks for FINS Communications

CS/CJ-series DeviceNet Units can perform FINS communications between networks. DeviceNet networks are handled the same way as other FA networks such as Controller Link or SYSMAC LINK, and the OA network Ethernet.

DeviceNet networks can be connected to the other DeviceNet networks or to other types of networks.

Note Explicit message communications cannot be performed between networks.

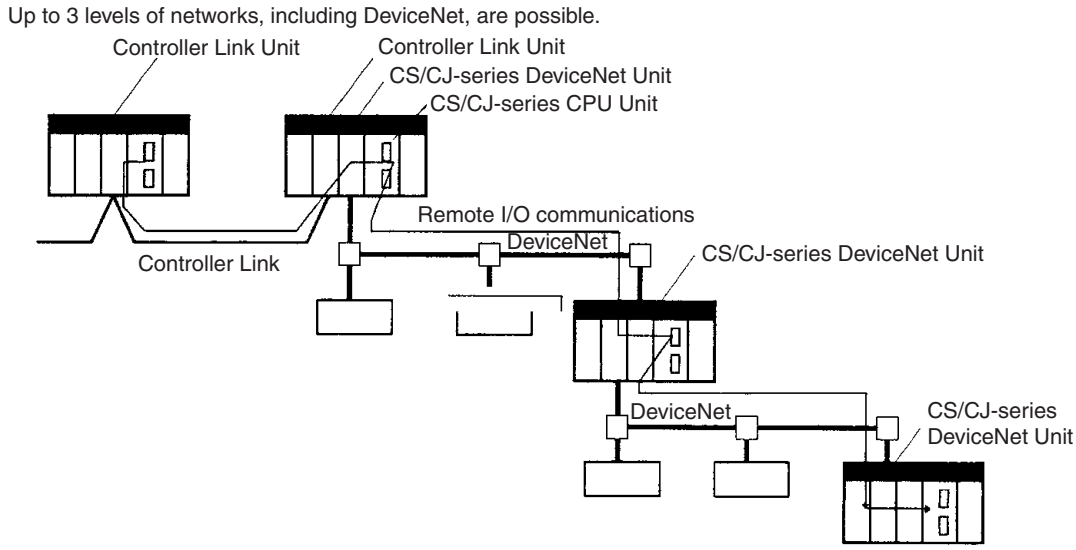

When connecting networks, routing tables must be registered for the PLC CPU Units on all networks.

When connecting two or more communication units (including the DeviceNet Unit) to a CS/CJ-series CPU Unit, the DeviceNet Unit must be registered in the CS/CJ-series PLC CPU Unit routing table (for the local network table only). Commands cannot be executed if the DeviceNet Unit is not registered.

6-4 Sending Explicit Messages

CS/CJ-series DeviceNet Units can send explicit messages. FINS command headers are attached to explicit messages and sent. Explicit messages can be sent to the following destinations.

- Masters or slaves made by other manufacturers
- Other PLCs with a CS/CJ-series DeviceNet Unit.
- PLCs (Slaves) with C200H I/O Link Units (See note).

Note Only reading and writing I/O memory is possible for PLCs with C200H I/O Link Units. Status reading/writing is not possible.

Example

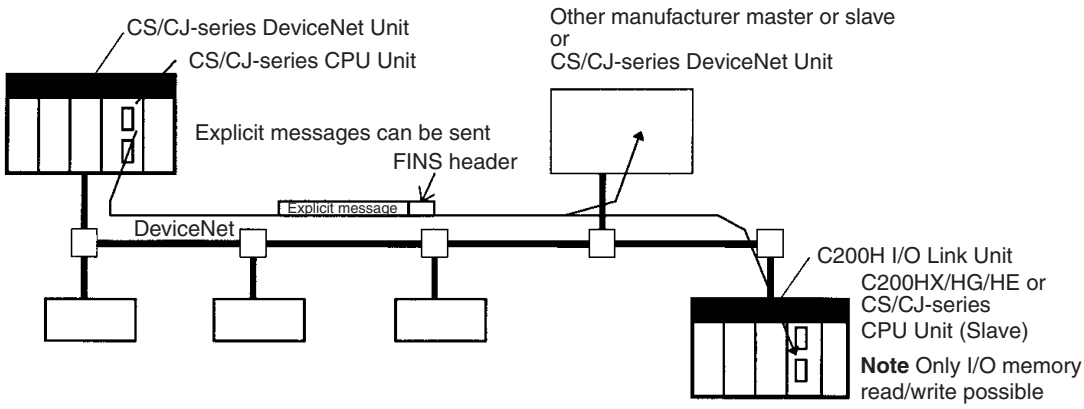

6-4-1 Sending Explicit Messages

The FINS command code 28 01 can be used to send explicit DeviceNet messages to OMRON slaves and DeviceNet devices made by other manufacturers. The use of explicit messages is illustrated in the following diagram.

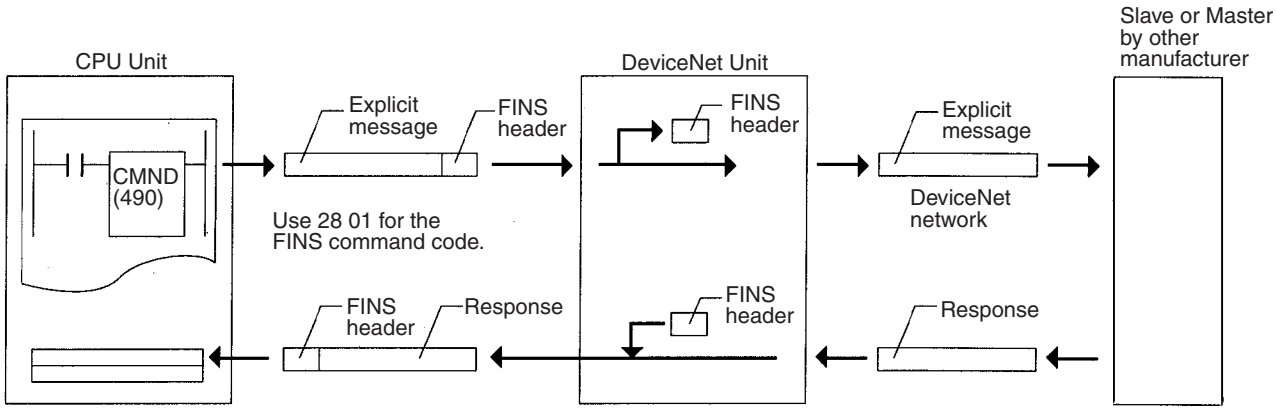

The local DeviceNet Unit is specified as the destination in the communications instruction in the PLC's user program (not the OMRON Special Slave or DeviceNet device made by another manufacturer), and the node address of the actual destination (i.e., the Slave or Master made by another manufacturer) is specified in the command data for the explicit message send command.

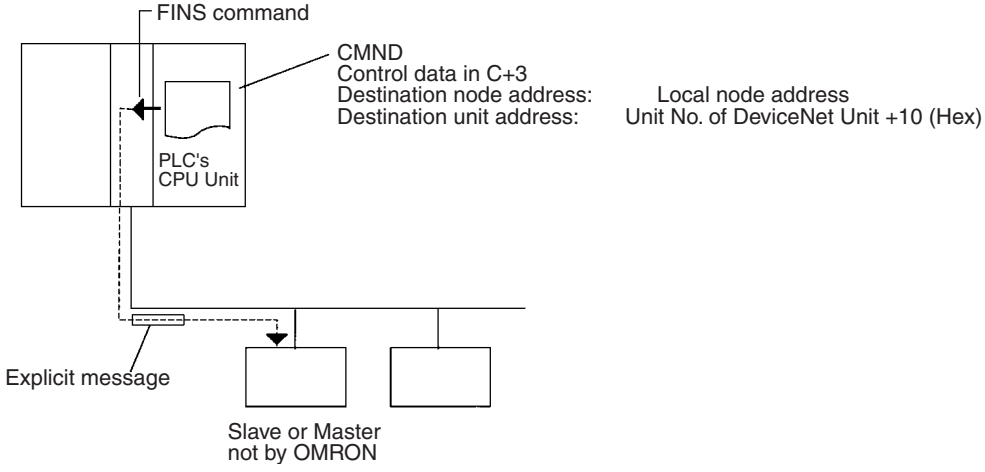

The following diagram shows an example of actual node address specifications.

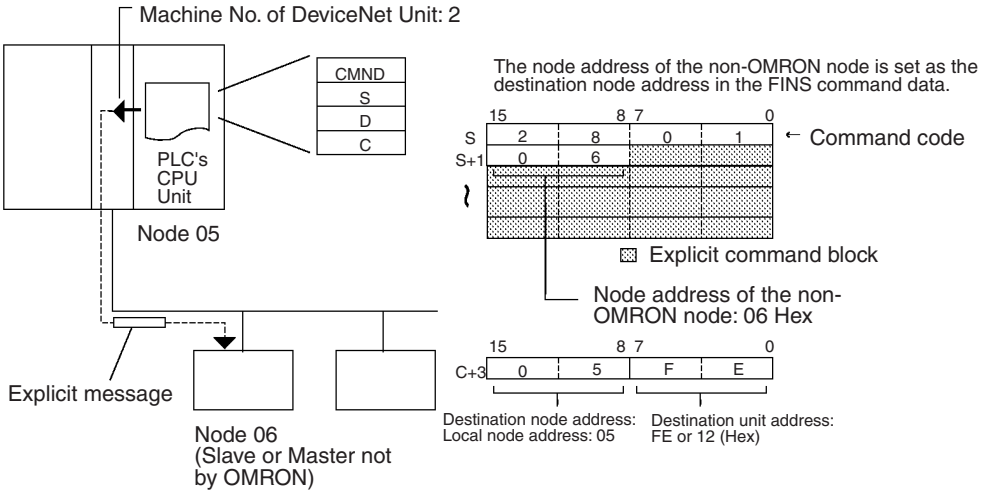

Note Depending on conditions, the destination slave may not always accept an explicit message. Always perform retry processing when sending explicit messages.

FINS Command: EXPLICIT MESSAGE SEND (28 01)

EXPLICIT MESSAGE SEND will send an explicit DeviceNet message to the specified class and receive a response.

Command Block

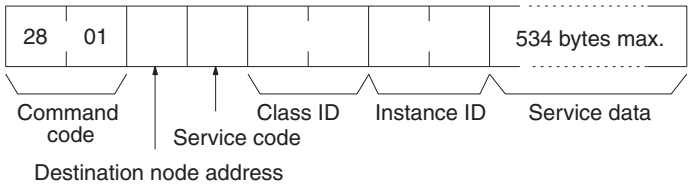

Response Block

Normal Response

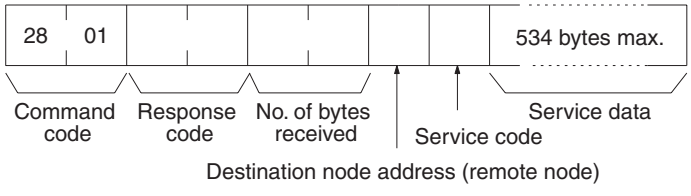

Error Responses

The following response is returned if an error occurs for the explicit message.

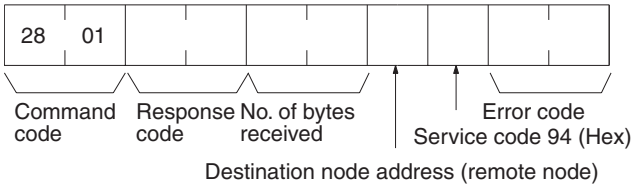

The following response is returned if the explicit message cannot be sent or times out.

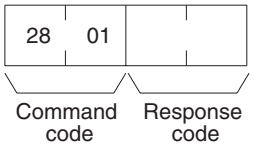

Parameters

Destination node address (command): The node address of the destination of the explicit message. (The node address of the local DeviceNet Unit is specified in the control data for the CMND(490), but the node address of the actual destination is specified here in the FINS command.)

Service code (command, response): A service code defined for DeviceNet. In a normal response, bit 15 of the service code specified in the command will be turned ON and returned. In an error response, 94 Hex will always be returned.

Class ID (command): The class ID of the destination of the explicit message.

Instance ID (command): The instance ID of the destination of the explicit message.

Service data (command, response): The data defined for the services codes.

No. of bytes received (response): The number of bytes received from the destination node address (remote node).

Destination node address (remote node): The node address of the OMRON Special I/O Slave Unit or Slave manufactured by another company to which the explicit message was sent is returned.

Error code (response): An error code defined by DeviceNet.

Note

1. This command sends a DeviceNet-defined explicit message to an OMRON Special I/O Slave Unit or a Slave manufactured by another company and receives a response.
2. Unlike other FINS commands, this command is addressed to the local DeviceNet Unit. The actual destination of the explicit message is given in the command data, as described above.
3. If the DeviceNet Unit receives an explicit message, it will automatically return a response.
4. Refer to the DeviceNet Specification for details on parameters for explicit messages.
5. Contact the ODVA to obtain copies of the DeviceNet specification.
   ODVA's URL: http://www.odva.org/
6. For details on explicit messages to OMRON Special I/O Slaves, refer to the *DeviceNet Slaves Operation Manual* (W347).

6-4-2 Sending Explicit Messages Using CMND(490)

CMND(490) can be used in the CPU Unit ladder program of the CS/CJ-series DeviceNet Unit to send explicit messages.

FINS command headers are attached to the explicit messages and sent.

After the FINS command header and the FINS completion code are sent, the explicit message response is received.

The following command is used: [CMND S D C]

S: First command word

D: First response word

C: First control data word

Command data is set in order starting with the word specified for the CMND(490) operand S (first command word) and continuing with words with higher addresses in I/O memory in the command block format.

Command Format Example: Writing Error Clear Codes to the CPU Unit

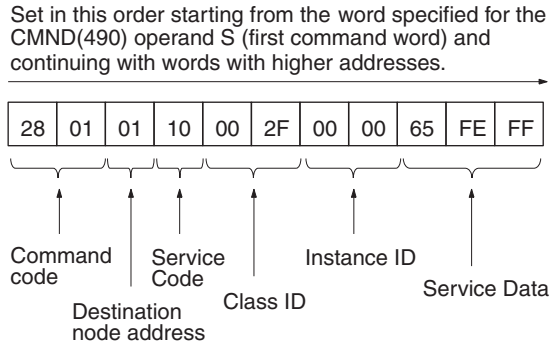

Method for Setting Data from CMND(490) Operand S

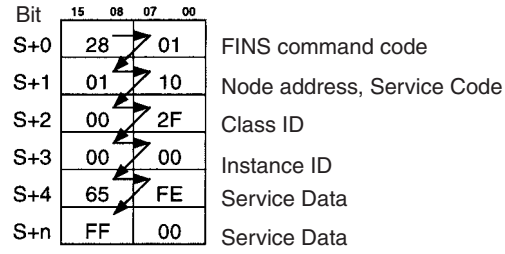

In the same way, response data is set from the starting with the word specified for CMND(490) operand D (first response word) and continuing with words with higher addresses in I/O memory in the response block format.

Note Service data that is in word (2-byte) or double-word (4-byte) units, such as word data and ERROR CLEAR codes, is specified from low to high (U) bytes in command block format. For example, to specify word data $1234, specify $34 and then $12. To specify $12345678, specify $78 to $56 to $34 to $12. The command blocks are shown in the following diagram.

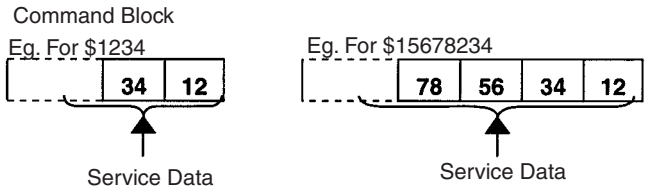

The format from CMND(490) operand S onwards will be set as follows:

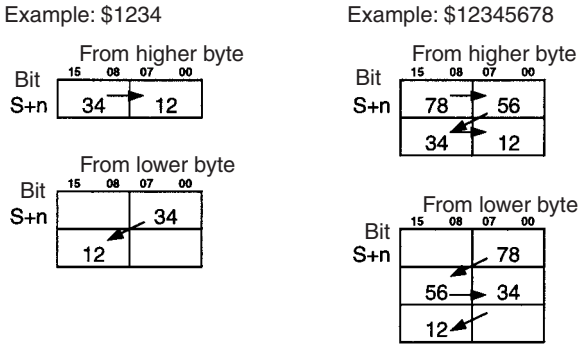

The response format data in service data that is in word (2-byte) or double-word (4-byte) units, such as word data and ERROR CLEAR codes, is also specified from low to high bytes in response block format

Example: Sending Explicit Messages Using CMND(490)

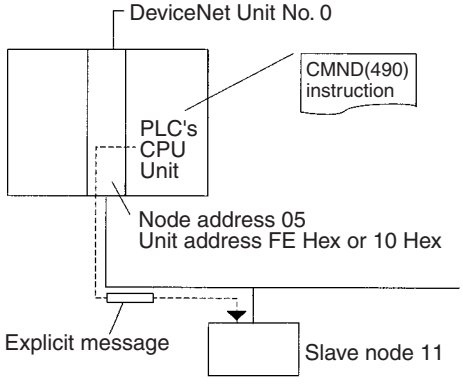

Operation

The vendor code is read from a Slave (OMRON vendor code: 002F Hex) using the EXPLICIT MESSAGE SEND command, 28 01. The command data is written starting at DM01000, and the response data is stored starting at D02000. When execution of CMND(490) has been completed, the completion code is stored in D00006 and the instruction is executed again.

Command Details

The following command is used: [CMND S D C]

S = D01000: First command word at local node

Settings (Hex)

D01000 = 2801:	Command Code
D01001 = 0B0E:	Slave node address: 11 Service code: 0E
D01002 = 0001:	Class ID: 0001
D01003 = 0001:	Instance ID: 0001
D01004 = 0100:	Attribute ID: 01

D = D02000: First response word at local node
C = D00000: First control word

Settings (Hex).

D00000 = 0009:	Number of command bytes
D00001 = 000A:	Number of response bytes
D00002 = 0001:	Destination network address: 1
D00003 = 05FE:	Destination node address: 05 Destination unit address: FE (or 10)
D00004 = 0000:	Response, communications port 0, no retries
D00005 = 0064:	Response monitoring time

Response

D02000 = 2801
D02001 = 0000
D02002 = 0004
D02003 = 0B8E: Response source node address 11: 0B Hex
Normal completion 8E Hex
D02004 = 2F00: Vendor code stored from high to low byte

Program Example

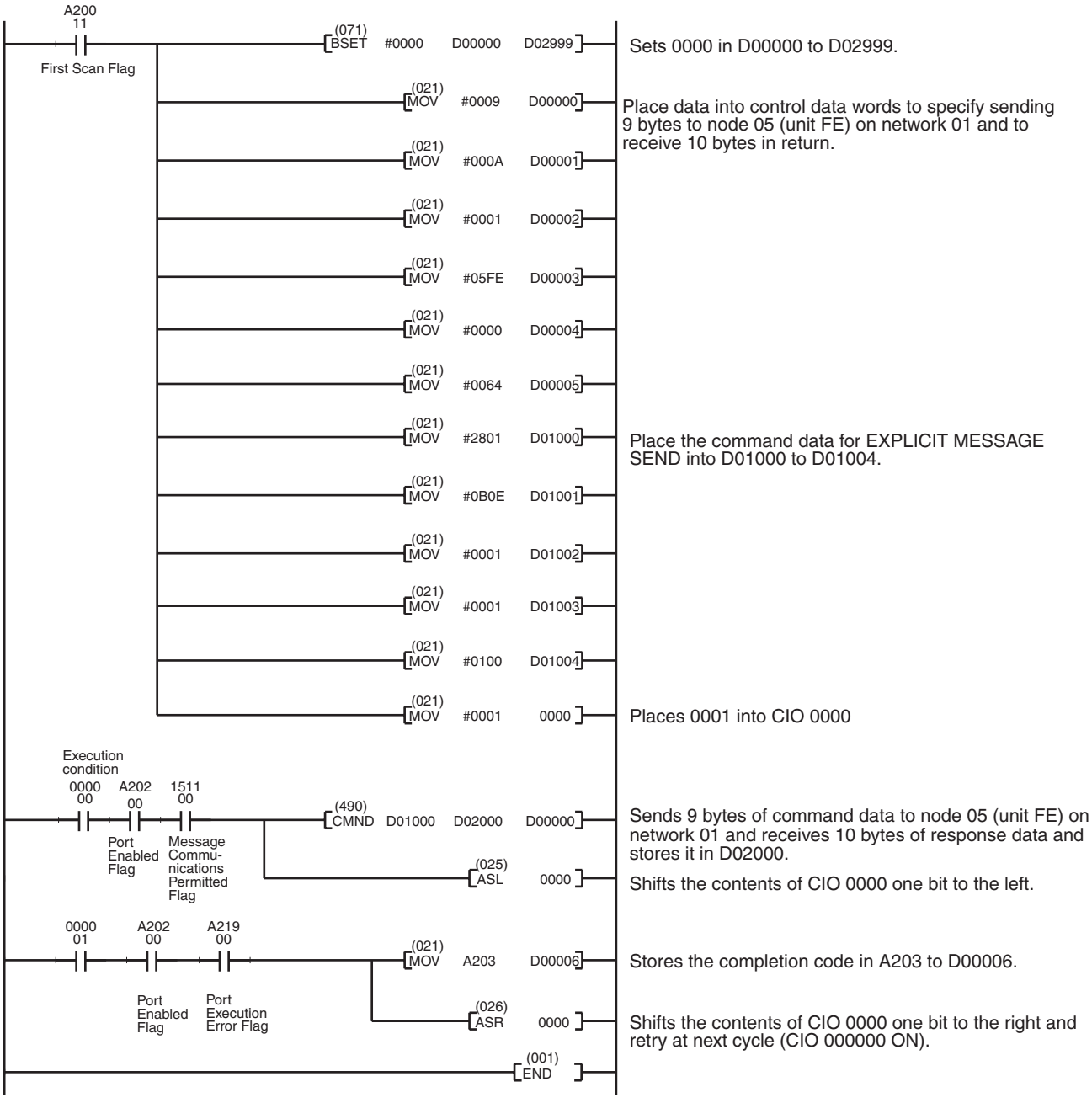

6-5 Receiving Explicit Messages

This CS/CJ-series DeviceNet Unit contains a PLC Object. The Unit will receive messages addressed to the PLC Object, process service requests addressed to the CPU Unit, and return responses.

The following services are provided by the PLC Object.

- CPU Unit status read/write
- CPU Unit I/O memory read/write

The explicit messages can be received from the following sources:

- Masters made by other manufacturers
- PLCs with C200H-series DeviceNet Master Units (C200HW-DRM21-V1)

- PLCs with CVM1/CV-series DeviceNet Master Units (CVM1-DRM21-V1)
- PLCs with CS/CJ-series DeviceNet Units

Example

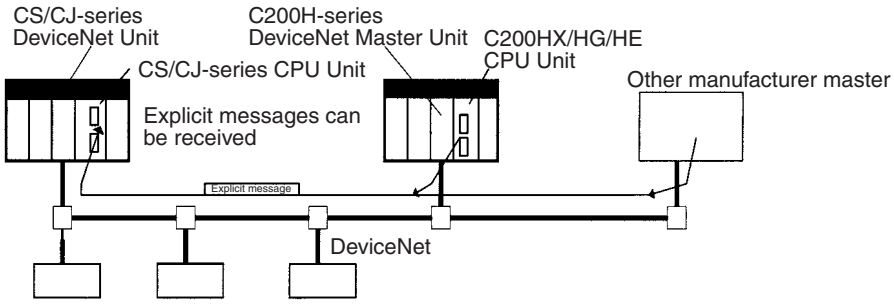

Note Status and the I/O memory read/write operations cannot be performed for PLCs with a C200H-series or CVM1/CV-series DeviceNet Master Units. The CPU Unit of a CS/CJ-series DeviceNet Unit can also send an explicit message to read/write I/O memory of PLCs with C200H I/O Link Units.

6-5-1 List of PLC Object Services

PLC Objects provide the following services.

Status Read/Write for CPU Units

Services	Service code	Class ID	Instance ID	Request service data	Contents
CPU Unit Information Read	0E Hex	2F Hex	00 Hex	Attribute ID = 64 Hex	Reads the operating mode of the CPU Unit.
				Attribute ID = 65 Hex	Reads if there is a fatal or non-fatal error in the CPU Unit.
				Attribute ID = 66 Hex	Reads CPU Unit model.
CPU Unit Write	10 Hex			Attribute ID = 64 Hex, Attribute Value	Changes the operating mode of the CPU Unit.
				Attribute ID = 65 Hex Attribute Value	Clears errors.
CPU Unit Status Read	40 Hex			None	Reads the detailed status of the CPU Unit. Operation status: Stop, run, CPU standby Operating modes: PROGRAM, MONITOR, RUN Fatal error information: Error flags, including memory errors, I/O bus errors, system errors Messages: Message No. when MSB instruction executed by CPU Unit Error codes: Error code for the most serious errors Error messages: Messages stored in CPU Unit when FAL/FALS instruction executed

I/O Memory Read/Write for CPU Units

Service	Service code	Class ID	Instance ID	Request service data	Contents
Byte Data Read	1C Hex	2F Hex	Specifies area (01 Hex to 14 Hex)	Address, No. of read bytes	Reads the specified node data in byte units. The word data is read in order, from high to low bytes. Read data: 200 bytes max.
Word Data Read	1D Hex			Address, No. of read words	Reads the specified node data in word units. The word data is read in order, from high to low bytes. Read data: 200 bytes max.
Byte Data Write	1E Hex			Address, word data	Writes the specified node data in byte units. The word data is specified in order, from high to low bytes. Write data: 200 bytes max.
Word Data Write	1F Hex			Address word data	Writes the specified node data in word units. The word data is specified in order, from high to low bytes. Write data: 200 bytes max.

The commands and responses for the explicit messages that can be sent and received are described on the following pages.

Note In the following command and response formats, all boxes represents 1 byte.

CPU Information Read (Service Code: 0E Hex)

Reads CPU Unit information, including operating mode, fatal/non-fatal errors, and the CPU Unit model.

Command Block

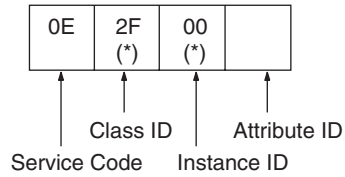

Note A body format of either 8 bits or 16 bits is possible.

Response Block

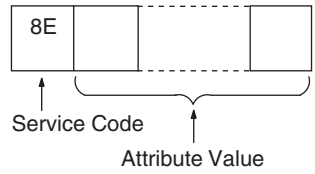

Parameters

Service code (command, response): 0E Hex is specified for commands. For responses, the highest bit be ON and 8E Hex will be returned.

Class ID (command): Always 2F Hex.

Instance ID (command): Always 00 Hex.

Attribute ID (command): The read information is specified by the attribute ID. The attribute IDs are listed in the following table.

Attribute ID (Hex)	Contents	Attribute value size
64	CPU Unit operating mode	1 word (2 bytes)
65	CPU Unit errors	1 word (2 bytes)
66	CPU Unit model	22 bytes

- CPU Operating Mode (when Attribute ID = 64 Hex)
  Reads the CPU Unit operating mode.
- CPU Unit Errors (when Attribute ID = 65 Hex)
  Reads if there are any fatal or non-fatal errors in the CPU Unit.
- CPU Unit Model (when Attribute ID = 66 Hex)
  Reads the CPU Unit model.

Read data (response): The specified information is returned in order.

- CPU Unit operating mode (attribute ID = 64 Hex).

The CPU Unit operating mode is returned in 1-word (2-byte) hexadecimal format, as follows:

0001 Hex: PROGRAM mode; 0002 Hex: MONITOR mode;
0004 Hex: RUN mode

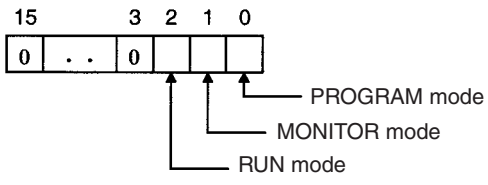

Note The codes for the above modes are 1-word (2-byte) data and are returned in low byte first. For example, for PROGRAM mode, the code is returned as 01 Hex followed by 00 Hex.

- CPU Unit Errors (when Attribute ID = 65 Hex)

The CPU Unit fatal/non-fatal error data is returned in 1-word (2-byte) hexadecimal format, as follows:

01 Hex: Error; 00 Hex: No error.

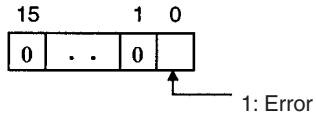

- CPU Unit Model (when Attribute ID = 65 Hex)

The CPU Unit model is returned in ASCII.

Size: 2 bytes (Always 1400 Hex) + Model: 20 bytes (fixed). Unused area is filled with 20 Hex (spaces) and returned.

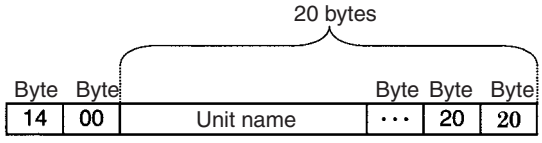

CPU Unit Write (Service Code: 10 Hex)

This PLC Object service writes CPU Unit information, including the operating mode and clearing errors.

Command Block

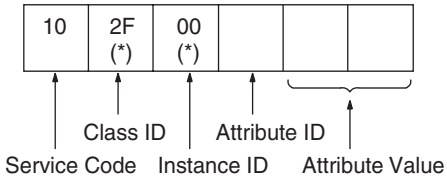

Note A body format of either 8 bits or 16 bits is possible.

Response Block

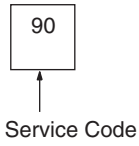

Parameters

Service code (command, response): 10 Hex is specified for commands. For responses, the highest bit will turn ON and 90E Hex will be returned.

Class ID (command): Always 2F Hex.

Instance ID (command): Always 00 Hex.

Attribute ID (command): Information to write is specified by the attribute ID. The attribute IDs are listed in the following table.

Attribute ID (Hex)	Contents	Attribute value size
64	CPU Unit operating mode	1 word (2 bytes)
65	CPU Unit errors	1 word (2 bytes)

- CPU Operating Mode (Attribute ID = 64 Hex)
  Changes the CPU Unit operating mode.

The Attribute Values are as follows:
0001 Hex: PROGRAM mode; 0002 Hex: MONITOR mode;
0004 Hex: RUN mode

Note The specified code for the above operating modes are 1-word (2-byte data, and are specified with the low byte first. For example, for PROGRAM mode, the code is specified as 01 Hex followed by 00 Hex. Accordingly, the low to high bytes for the above codes are set as high to low bytes in I/O memory, when setting the codes as data for operand S of CMND(490).

- Clearing CPU Unit Errors (when Attribute ID = 65 Hex)
  Clears any fatal or non-fatal errors in the CPU Unit. Sets the error clear code to Attribute Value. The error clear codes are listed in the following table.

Error code (Hex)	Data cleared
FFFE	Current error (clears the highest priority error)
0008B	Interrupt task error
009A	Basic I/O error
009B	PLC Setup error
02F0	Inner Board non-fatal error
0300 to 035F	Special I/O Unit error
00A0 to 00A1	SYSMAC BUS error
0500 to 055F	Special I/O Unit settings error
00E7	I/O verification error When registered and actual I/O tables are different When disconnecting or connecting I/O Units
00F7	Battery error
0200 to 020F	CS/CJ-series CPU Bus Unit error (last 2 digits are binary code for the Unit No.) For parity errors generated when data transferred between CS/CJ-series CPU Bus Unit and CPU Unit For watchdog timer errors in CS/CJ-series CPU Bus Unit
0400 to 040F	CPU Bus settings error (last 2 digits are binary code for the Unit No.)
4101 to 42FF	System error (FAL): FAL instruction executed

Note Error clear codes are 1-word (2-byte) data, so the above codes are specified with the low byte first. The low to high bytes for the above codes are set as high to low bytes in I/O memory, when setting the codes as data for operand S of CMND(490). For example, to specify battery error 00F7 Hex, specify the error code as F7 Hex followed by 00 Hex, as shown in the following diagram.

Command Block

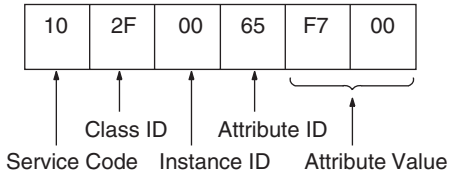

CPU Unit Status Read (Service Code: 40 Hex)

This PLC Object service reads status details (operation status, operating mode, fatal and non-fatal errors, etc.) from the CPU Unit.

Command Block

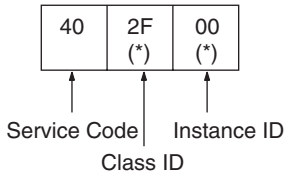

Note A body format of either 8 bits or 16 bits is possible.

Response Block

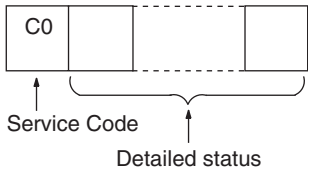

Parameters

Service code (command, response): 40 Hex is specified for commands. For responses, the highest bit will turn ON and C0 Hex will be returned.

Class ID (command): Always 2F Hex.

Instance ID (command): Always 00 Hex.

Read data (response): The read data is given in the following table. The data is returned after the service code in the order shown in the table (high to low).

Operation Status
RUN mode
Fatal error information (L)
Fatal error information (H)
Non-fatal error information (L)
Non-fatal error information (H)
Message exists/does not exist (L)
Message exists/does not exist (H)
Error code (L)
Error code (H)
Error message (16 bytes)

- **Operation status:** Returns the operation status of the CPU Unit in 1-byte (2-digit) hexadecimal.
- **Operating mode:** Returns the operating mode of the CPU Unit in 1-byte (2-digit) hexadecimal.
  0001 Hex: PROGRAM mode; 0002 Hex: MONITOR mode;
  0004 Hex: RUN mode
- **Fatal error information:** Returns the fatal error information for the CPU Unit in 2 bytes (low to high).

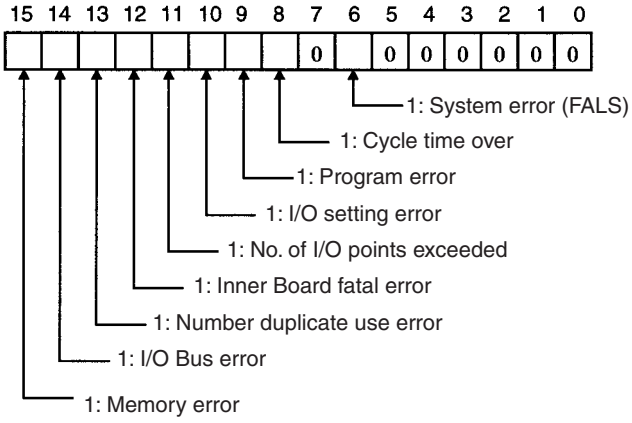

- **Non-fatal error information:** Returns the non-fatal error information for the CPU Unit in 2 bytes (low to high).

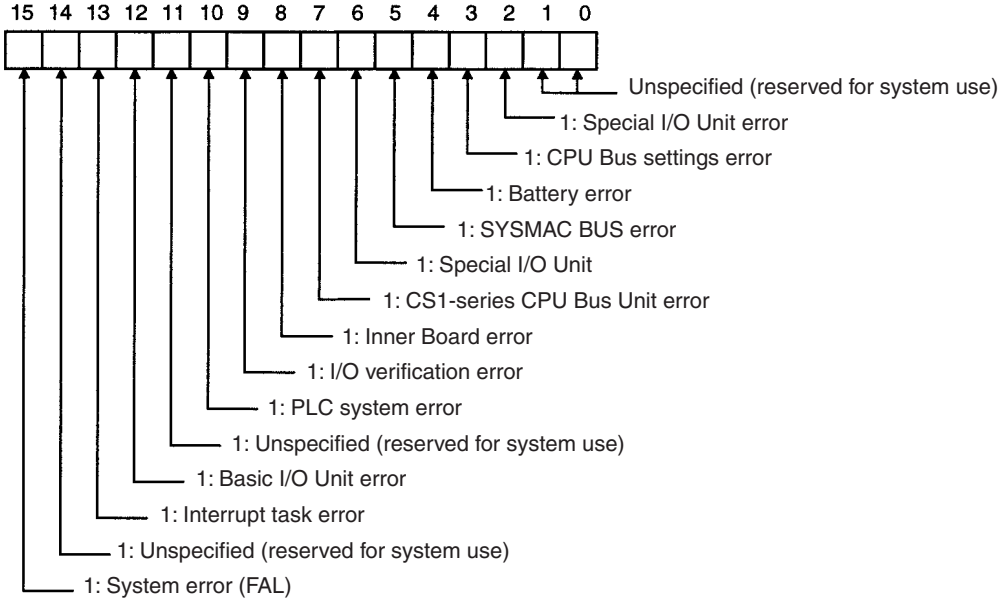

- **Message Exists/Does Not Exist:** When the MSG instruction is executed by the CPU Unit, the bit corresponding to the message number will turn ON and be returned in 2 bytes (from low to high bytes).

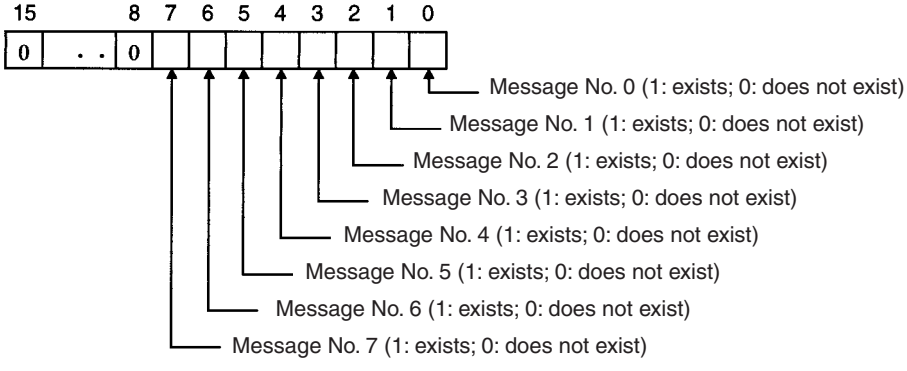

- **Error Code**: The highest priority error code of the errors existing when the command is executed will be returned in 2-byte decimal (from low to high bytes). If there are no errors, the error code will be 0000.

Note For information on the severity of error codes, refer to the *CS1 Series CPU Unit Operation Manual* (W339) or the *CJ Series CPU Unit Operation Manual* (W393).

- **Error Messages:** If the above error codes have occurred when FAL/FALS instructions are executed with registered messages, those messages are returned in 16-byte ASCII. If there are no registered messages or if the error codes have not occurred due to execution of FAL/FALS instructions, the code is returned in ASCII with 20 Hex (space) in 16 bytes.

Byte Data Read (Service Code: 1C Hex)

Byte Data Read reads any I/O memory area data in a CPU Unit with a CS/CJ-series DeviceNet Unit mounted. The read word data is in byte units. The response block is returned from high to low bytes.

Command Block

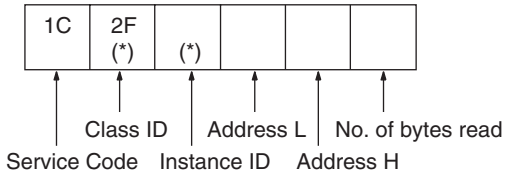

Note A body format of either 8 bits or 16 bits is possible.

Response Block

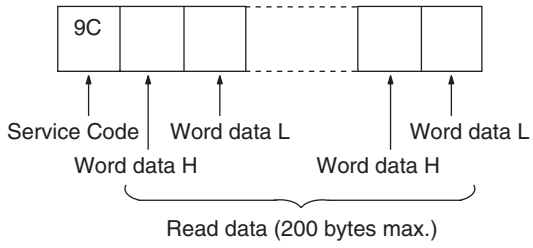

Parameters

Service code (command, response): IC Hex is specified for commands. For responses, the highest bit will turn ON and 9C Hex will be returned.

Class ID (command): Always 2F Hex.

Instance ID (command): The memory area that will read the data is specified as shown in the following table.

Instance ID (Hex)	CPU Unit memory area for read	Word range
01	CIO	0000 to 6143
03	DM	D00000 to D32767
04	WR	W000 to W511
05	HR	H000 to H511
08 to 14	EM, banks 0 to C	En_00000 to En_32767 (n: 0 to C)

Address L, Address H (command): The address of the first word from which to read the data is specified in hexadecimal as shown below.
Address L: The lower 2 digits when the first word address is given in 4-digit hexadecimal.
Address H: The higher 2 digits when the first word address is given in 4-digit hexadecimal.

No of Read Bytes (command): The number of bytes of read data is specified in 1-byte (2-digit) hexadecimal. The range is 01 to C8 Hex (1 to 200 decimal).

No. of bytes received (response): The number of bytes received from the destination node address (remote node) is returned in hexadecimal.

Destination node address (response): The node address of the CS/CJ-series DeviceNet Unit that returned the response is returned in hexadecimal.

Read data (response): The specified area, word, and byte data is returned in order from word H (high byte: bits 8 to 15) to word L (low byte: bits 0 to 7). If an odd number is specified for the number of read bytes, the last 1 byte of data will be read to the high word.

Important Points

The actual address L, address H, and number of read bytes that can be specified depends on the model of the CPU Unit of the CS/CJ-series DeviceNet Unit and the type of memory area. Do not exceed the boundary of the data areas for the PLC you are using.

Word Data Read (Service Code: 1D Hex)

Word Data Read reads I/O memory area data in CPU Units with a CS/CJ-series DeviceNet Units. The read word data is in word units. The response block is returned from low to high bytes.

Command Block

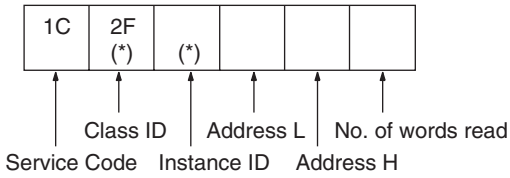

Note A body format of either 8 bits or 16 bits is possible.

Response Block

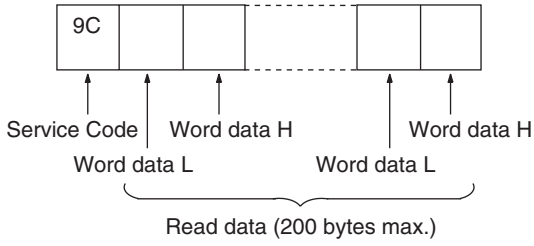

Parameters

Service code (command, response): ID Hex is specified for commands. For responses, the highest bit will turn ON and 9D Hex will be returned.

Class ID (command): Always 2F Hex.

Instance ID (command): The type of memory area that will read the data is specified as shown in the following table.

Instance ID (Hex)	CPU Unit memory area for read	Word range
01	CIO	0000 to 6143
03	DM	D00000 to D32767
04	WR	W000 to W511
05	HR	H000 to H511
08 to 14	EM, banks 0 to C	En_00000 to En_32767 (n: 0 to C)

Address L, Address H (command): The address of the first word to read the data from is specified in hexadecimal as shown below.
Address L: The lower 2 digits when the first word address is given in 4-digit hexadecimal.

Address H: The higher 2 digits when the first word address is given in 4-digit hexadecimal.

No of Read Words (command): The number of words of read data is specified in 1-byte (2-digit) hexadecimal. The range is 01 to 64 Hex (1 to 100 decimal).

Read data (response): The specified area, word, and byte data is returned in order from word L (low byte: bits 0 to 7) to word H (high byte: bits 8 to 15).

Important Points

The actual address L, address H, and number of write data bytes that can be specified depends on the CPU Unit of the CS/CJ-series DeviceNet Unit and the Memory Area. Do not exceed the boundary of the data areas for the PLC you are using.

Byte Data Write (Service Code: 1E Hex)

Byte Data Write writes data to I/O memory area in CPU Units with CS/CJ-series DeviceNet Units mounted. The write word data is in byte units. The command block is specified from high to low bytes, as shown in the following diagram.

Command Block

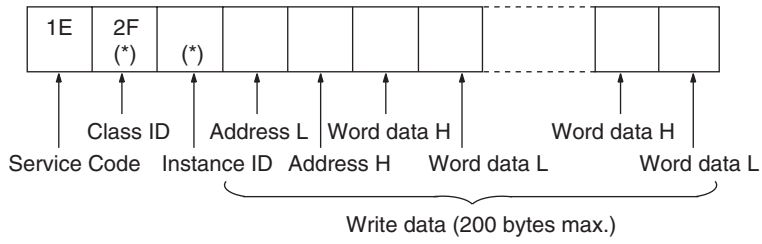

Note A body format of either 8 bits or 16 bits is possible.

Response Block

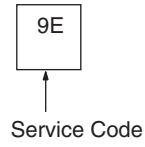

Parameters

Service code (command, response): IE Hex is specified for commands. For responses, the highest bit will turn ON and 9E Hex will be returned.

Class ID (command): Always 2F Hex.

Instance ID (command): The type of memory area to which the data will be written is specified as shown in the following table.

Instance ID (Hex)	CPU Unit memory area for write	Word range
01	CIO	0000 to 6143
03	DM	D00000 to D32767
04	WR	W000 to W511
05	HR	H000 to H511
08 to 14	EM, banks 0 to C	En_00000 to En_32767 (n: 0 to C)

Address L, Address H (command): The address of the first word to which the data will be written is specified in hexadecimal as shown below.
Address L: The lower 2 digits when the first word address is displayed in 4-digit hexadecimal.

Address H: The higher 2 digits when the first word address is displayed in 4-digit hexadecimal.

Write data (response): The specified area and write data is returned in order from word H (higher byte: bits 8 to 15) to word L (lower byte: bits 0 to 7). If an odd number is specified, the last 1 byte of data will be written to word H.

Important Points

The actual address L, address H, and number of write data words that can be specified depends on the type of CPU Unit with CS/CJ-series DeviceNet Unit mounted and the type of memory area. Do not exceed the boundary of the data areas for the PLC you are using.

Word Data Write (Service Code: 1F Hex)

Word Data Write writes data to any I/O memory area in CPU Units with CS/CJ-series DeviceNet Units mounted. The write word data is in word units. The response block is returned from low to high bytes.

Command Block

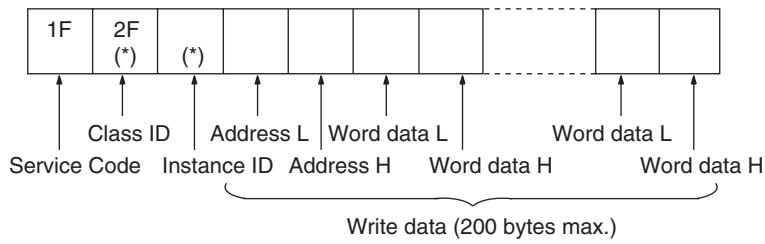

Note A body format of either 8 bits or 16 bits is possible.

Response Block

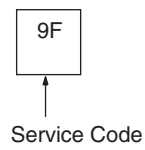

Parameters

Service code (command, response): IF Hex is specified for commands. For responses, the highest bit will turn ON and 9F Hex will be returned.

Class ID (command): Always 2F Hex.

Instance ID (command): The memory area to which the data is written is specified as shown in the following table.

Instance ID (Hex)	CPU Unit memory area for write	Word range
01	CIO	0000 to 6143
03	DM	D00000 to D32767
04	WR	W000 to W511
05	HR	H000 to H511
08 to 14	EM, banks 0 to C	En_00000 to En_32767 (n: 0 to C)

Address L, Address H (command): The address of the first word to which the data is written is specified in hexadecimal as shown below.
Address L: The lower 2 digits when the first word address is displayed in 4-digit hexadecimal.
Address H: The higher 2 digits when the first word address is displayed in 4-digit hexadecimal.

Write data (response): The specified area and write data is returned in order from word L (lower byte: bits 0 to 7) to word H (higher byte: bits 8 to 15).

Important Points

The actual address L, address H, and number of read words that can be specified depends on the mode of CPU Unit for the CS/CJ-series DeviceNet Unit and the type of memory areas. Do not exceed the boundary of the data areas for the PLC you are using.

SECTION 7
Other Functions

This section describes connecting to CX-Programmer via the DeviceNet and the Memory Card backup function.

7-1 Connecting to the CX-Programmer via the DeviceNet. 182
- 7-1-1 Setting Node Addresses 183
- 7-1-2 Setting the Message Monitoring Timer of the DeviceNet Unit 183
- 7-1-3 Setting the Frame Length when Using the CX-Programmer via the DeviceNet 185
- 7-1-4 Response when Using the CX-Programmer via the DeviceNet 185

7-2 Memory Card Backup Functions 186
- 7-2-1 Outline of Functions 187
- 7-2-2 File Names 188

7-3 Simple Backup Function 189
- 7-3-1 Overview of Function 189
- 7-3-2 Applications 189
- 7-3-3 Operating Methods 190

7-1 Connecting to the CX-Programmer via the DeviceNet

With CX-Programmer Ver. 2.1 or higher, a serial connection can be made to a PLC containing a CS/CJ-series DeviceNet Unit to form an online connection, via the DeviceNet, to other PLC CPU Units on the network.

- CS-series CPU Unit
- CJ-series CPU Unit
- Programmable Slave

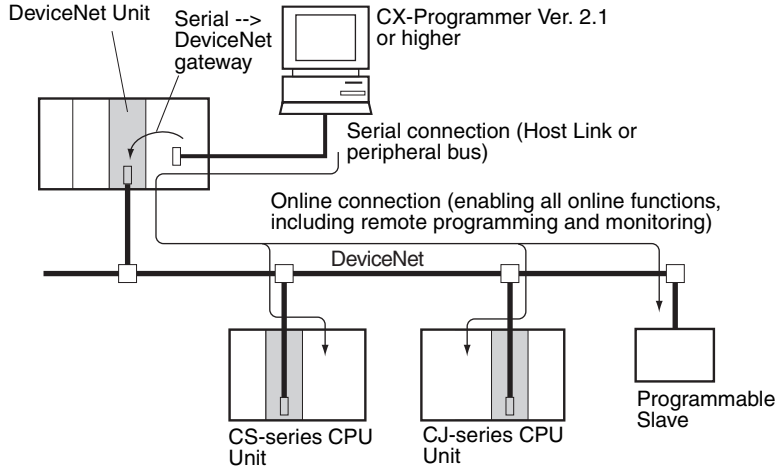

It is also possible to form an online connection (for remote programming or monitoring) with the PLC CPU Units shown above on the DeviceNet network from another network.

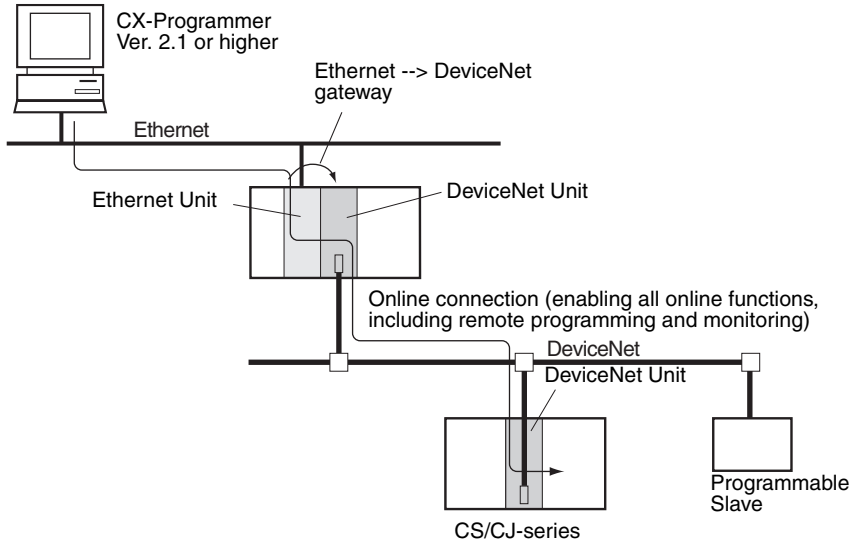

7-1-1 Setting Node Addresses

When the CX-Programmer is connected online, it uses FINS message communications. It is thus necessary to set the node address to a number other than 0 for DeviceNet Units mounted to the target PLC, DeviceNet Units mounted to a PLC which is connected by a serial connection to the CX-Programmer, or DeviceNet Units mounted to a PLC relaying between networks.
If a DeviceNet Unit with the address node 0 exists in the online connection path, connection will not be possible.

7-1-2 Setting the Message Monitoring Timer of the DeviceNet Unit

When connecting the CX-Programmer via the DeviceNet, set the message monitoring timer inside the following DeviceNet Units to 20,000 ms (20 s).

- The DeviceNet Unit mounted to the PLC with the serial connection to the CX-Programmer.
- The DeviceNet Unit mounted to the PLC relaying between networks.

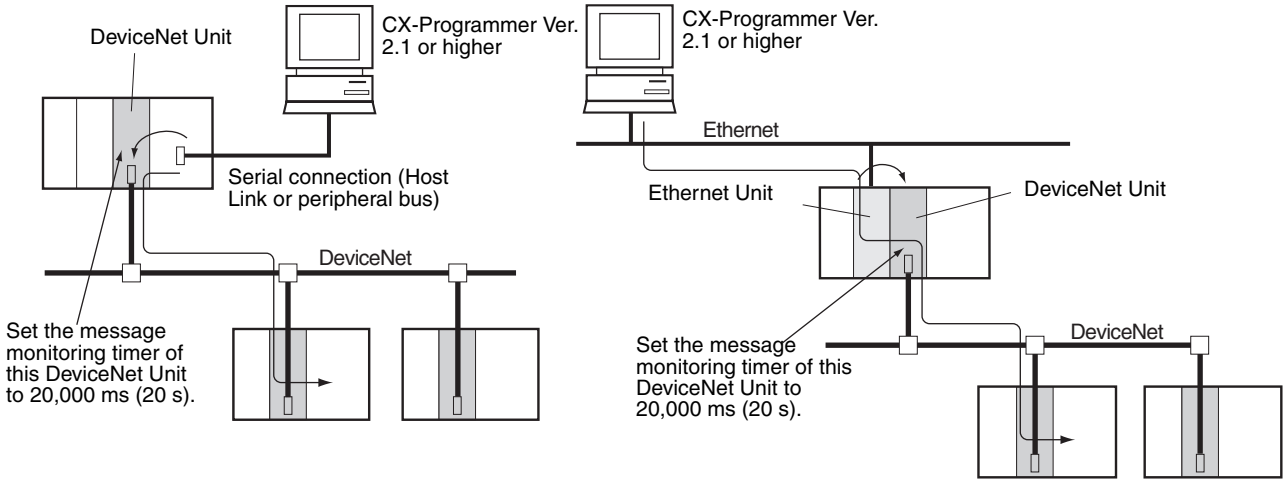

Use the Configurator to set the message monitoring timer.

Setting the Message Monitoring Timer

Use the following procedure to set the message monitoring timer.

1,2,3...

1. Select ***Device/Parameter/Edit*** and then click the **Message Timer** Tab.

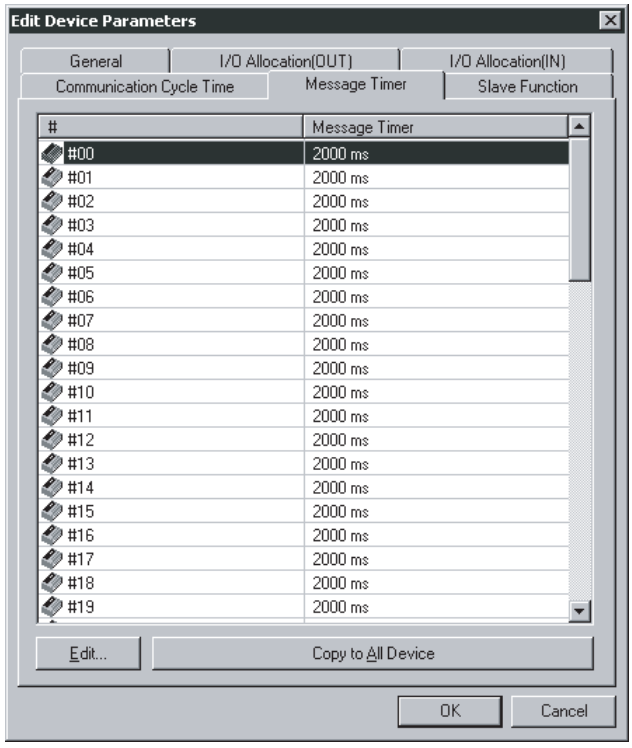

2. Double-click on the node address (#) that you want to change, or select the node address and click on the **Edit** Button. A dialogue box like the one below will appear.

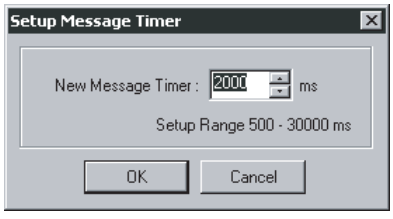

3. Input the value, then click on the **OK** Button.

   Note To set the same value for all of the devices, select the node addresses to be set, then click on ***Copy to All Device***.

Note

1. The default setting for the message monitoring timer is 2,000 ms (2 s). If it is used without being changed, a communications error will result when the CX-Programmer is operated. The setting range is 500 to 30,000 ms. Set in units of ms.
2. The message monitoring timer serves as a timeout monitor for message communications (both explicit and FINS). Settings can be made for each device to which messages are to be sent. When the response from the target device is slow, the setting value must be increased. This is often the case when FINS messages are sent across networks, because the response time is typically slow. However, when the setting is increased, subsequent messages cannot be sent to the same device until it is finished waiting for the response.

   Whereas the DeviceNet Unit monitors the message time-out with this timer, the CPU Unit monitors with the response monitor time set in the CMND/SEND/RECV instruction. There is thus no effect when only one of them, i.e., only the message monitoring timer or only the response monitor time in the CMND/SEND/RECV instruction, is increased or decreased. Set the

response monitor time in the CMND/SEND/RECV instruction to be the same as or slightly longer than the time for the message monitoring timer (Response monitor time in the CMND/SEND/RECV instruction ≥ message monitoring timer.) If time-outs occur frequently, increase both of the settings equally, while maintaining the relationship between them.

7-1-3 Setting the Frame Length when Using the CX-Programmer via the DeviceNet

When using the CX-Programmer via the DeviceNet, set the frame length in the ***Network Settings*** under ***Change PLC*** from the CX-Programmer to 542 bytes or less.

When using the peripheral bus, the value must be changed because the default setting is 1,004 bytes. The Host Link (SYSMAC WAY) does not need to be changed because the factory setting is 540 bytes.

The frame length setting is made with the following window. Click on the **Settings** Button to the right of ***Network Type*** in the **Change PLC** Dialog Box to access this window.

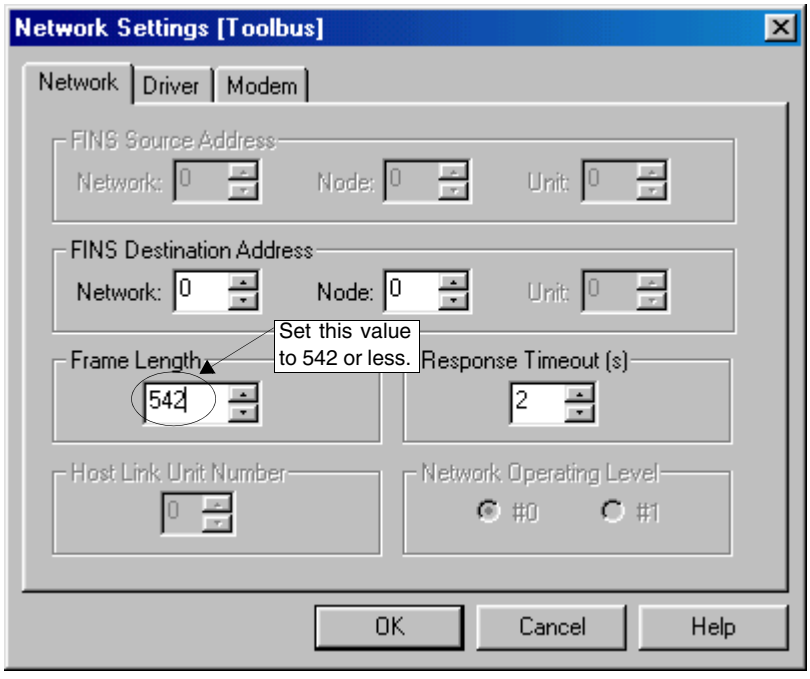

Refer to the operation manual for the CX-Programmer for details.

7-1-4 Response when Using the CX-Programmer via the DeviceNet

To assure appropriate remote I/O response in the DeviceNet field network, the DeviceNet Unit is designed to prioritize remote I/O communications over message communications. For this reason, when the CX-Programmer is connected via the DeviceNet Unit, its response suffers by up to a nine-fold drop (for a communications speed of 500 Kbps) in comparison with connection by a peripheral bus.

The following methods can be used to improve this response.

1,2,3... 1. Temporarily disable remote I/O communications.

Operate the CX-Programmer after disabling remote I/O communications by turning ON the Remote I/O Communications Stop Switch (word n, bit 04) in the allocated CIO Area words. This will limit the drop in response to

a maximum of four-fold (for a communications speed of 500 Kbps) in comparison with connection by a peripheral bus.

2. Temporarily extend the communications cycle time.

   Operate the CX-Programmer after extending the cycle time in the Communications Cycle Time Setup Table (word m) in the DM Area, and turning ON the Temporary Setting Switch for Communications Cycle Time (word n, bit 12).

   Extending the communications cycle time 1.5 times will result in a 20%-30% improvement in response. However, whereas the CX-Programmer response will increasingly improve by extending the communications cycle time, the remote I/O communications response will suffer.

Note The CX-Programmer response decreases in accordance with decreases in the DeviceNet communications speed. At a speed of 125 Kbps, response will suffer by up to a twenty-fold drop in comparison with connection by a peripheral bus.

Accordingly, a DeviceNet communications speed of 500 Kbps is recommended when the CX-Programmer is connected to the network via the DeviceNet Unit.

7-2 Memory Card Backup Functions

The DeviceNet Unit stores the following setup data in the internal non-volatile memory (EEPROM).

- Master scan lists
- Slave scan lists
- Message monitoring timer lists
- Communications cycle time settings
- Master/Slave functions enabled/disabled settings

Note Backup is possible only when scan lists are enabled.

With the CS/CJ-series DeviceNet Unit, all this setup data can be backed up to and restored from a Memory Card mounted to the CPU Unit. (See note.)

Note The data can be backed up to a Memory Card only. It cannot be backed up to a EM file.

If all setup data for a DeviceNet Unit that starts normally is saved on a Memory Card, that data can be read and used when replacing DeviceNet Units, making the replacement process smooth.

Device parameter files (.dvf files) created using the Configurator can be saved from the computer to the Memory Card and can be restored to the DeviceNet Unit mounted to the CPU Unit. This means that setup data created using the Configurator (scan lists and other parameters) can be downloaded to DeviceNet Units simply by taking the Memory Card to site.

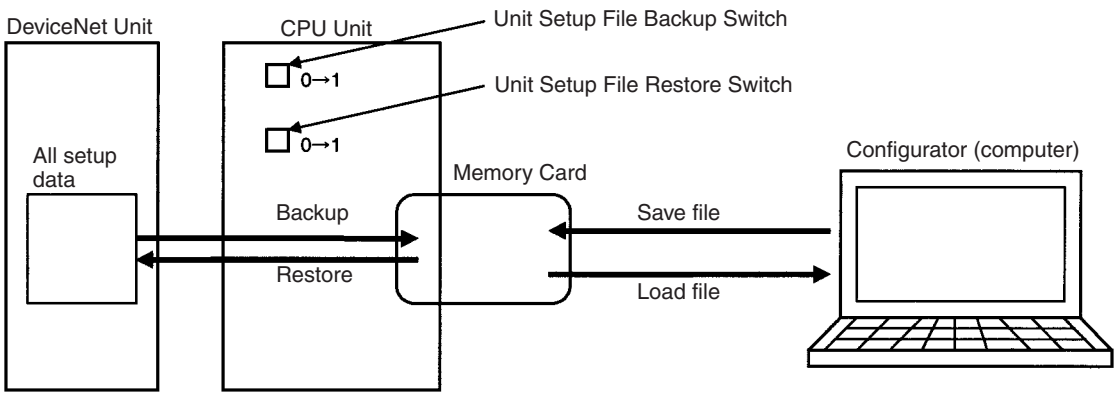

7-2-1 Outline of Functions

1. Backing Up Unit Setup Files

Saves all internal Unit setup data to the Memory Card mounted to the CPU Unit.
Method: Turn ON the Setup File Backup Switch (word n+1, bit 15) to save the internal Unit setup data to the Memory Card as a Unit Setup File.

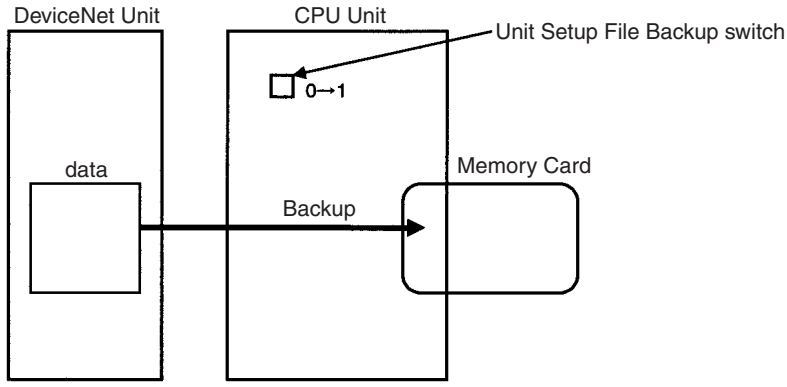

2. Restoring Unit Setup Files

Restoring Unit Setup Files involves reading the data and setting it to a Unit. The data saved to the Memory Card mounted to the CPU Unit is read to the Unit.
Method: Turn ON the Unit Setup File Restore Switch (word n+1, bit 14) to read the Unit setup data file on the Memory Card and to enable these settings as the Unit settings.

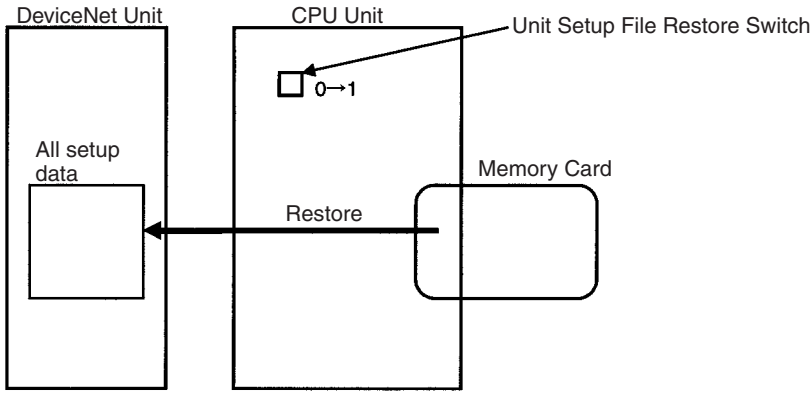

Note If there is an error in the setup data or if the file could not be read, the File Read/Write Error bit in Unit Status 2 (word n + 11, bit 08) will turn ON.

3. Saving Files from Configurator to Memory Card

Device parameter files (.dvf files) for this DeviceNet Unit that have been created using the Configurator can be saved on the Memory Card via the HMC-AP001 Memory Card Adaptor as file name DNnnBKUP.dvf (where nn is the Unit number in 2-digit hexadecimal). This DeviceNet Unit can be mounted to the CPU Unit and, by turning ON the Unit Setup File Restore Switch (word n, bit 14), the setup data can be restored to the DeviceNet Unit.

Note The file name when saving setup data to the Memory Card must be DNnnBKUP.dvf (where nn is the Unit number in 2-digit hexadecimal). For example, for unit number 00, the file name must be DN00BKUP.dvf. If the file is saved under another name, the data cannot be restored from the Memory Card to the DeviceNet Unit.

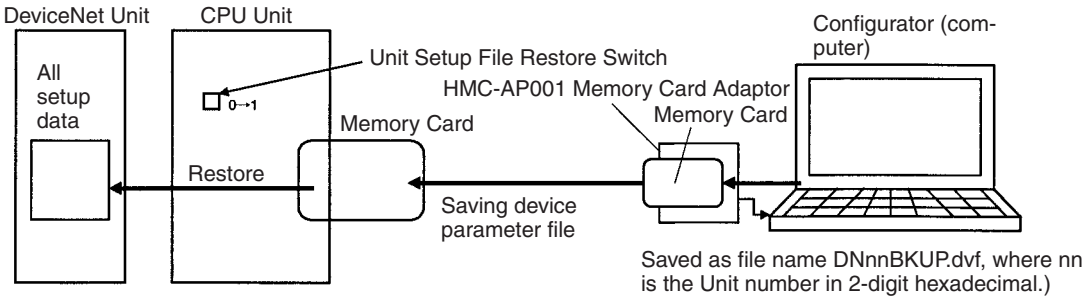

7-2-2 File Names

The following files are created on the Memory Card.

Directory (fixed): Route and directory.

File name (fixed): DNnnBKUP.dvf (nn: Unit number in 2-digit hexadecimal).

Note The data in the above files is compatible with the data in the DeviceNet Unit device parameter file.

7-3 Simple Backup Function

7-3-1 Overview of Function

The CPU Unit's simple backup function can be used when either a CS1W-DRM21-V1 DeviceNet Unit is mounted to a CS1-H CPU Unit, or a CJ1W-DRM21 DeviceNet Unit to a CJ1-H CPU Unit. This function enables all setup data in the internal non-volatile memory (EEPROM) of the DeviceNet Unit, as well as all data in the CPU Unit, to be automatically backed up to, restored from, or compared with a file in a Memory Card mounted in the CPU Unit.

When all the setup data in the DeviceNet Unit is written to the Memory Card using a simple backup operation, it is backed up as a Unit/Board backup file in the Memory Card under the file name BACKUP□□.PRM.

Note The boxes in the backup file name represent the unit address of the DeviceNet Unit, which is the unit number + 10 hex.

This backup file is also used when downloading data from or comparing data with a file in the Memory Card.

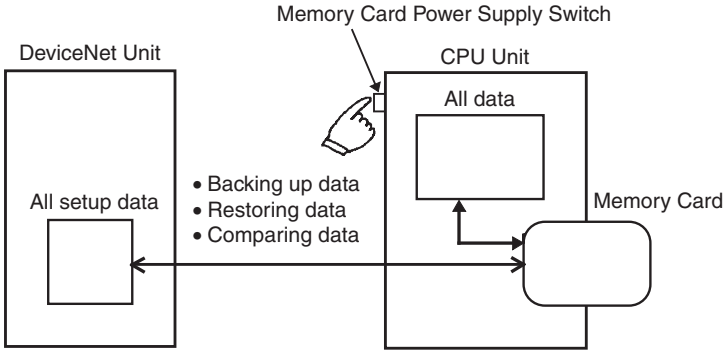

Note The following table shows the Units that support the simple backup function. Make sure that the Units being used support the function.

CPU Unit	DeviceNet Unit		
	CS1W-DRM21-V1	CS1W-DRM21	CJ1W-DRM21
CS1-H CPU Unit	Yes	No	No
CS1 CPU Unit	No	No	No
CJ1-H CPU Unit	No	No	Yes
CJ1 CPU Unit	No	No	No

Note The DeviceNet Unit's setup data that is created as a Unit/Board backup file is the same setup data that is backed up and restored when using the backup function described in *7-2 Memory Card Backup Functions*, but is not compatible with the device parameter file. In the same way, although the content of the device parameter file created using DeviceNet Configurator Ver.2.□ is the same, it is not compatible with the backup file created using the simple backup function.

7-3-2 Applications

Use the simple backup function to create a backup file of data for the entire PLC, including the CPU Unit and Serial Communications Units/Boards, or when replacing all the Units.

7-3-3 Operating Methods

Backing Up DeviceNet Unit Setup Files to Memory Card

Set the DIP switch on the front panel of the CPU Unit, as shown in the following table, and press down the Memory Card Power Supply Switch for 3 seconds.

DIP switch on front panel of CPU Unit	
Pin 7	Pin 8
ON	OFF

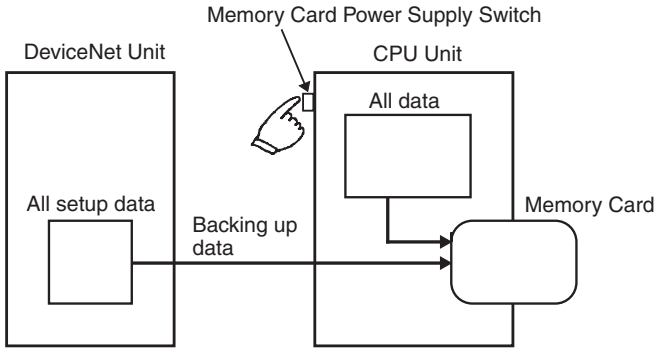

This operation will create the DeviceNet backup file and also write the file to the Memory Card.

When the Memory Card Power Supply Switch is pressed, the MCPWR indicator on the front of the CPU Unit will flash once and then will be lit while data is being written. If the data is written normally, the indicator will turn OFF.

Restoring DeviceNet Unit Setup Files from Memory Card (Reading and Setting in Unit)

Set the DIP switch on the front panel of the CPU Unit, as shown in the following table, turn the power to the CPU Unit OFF and then ON again.

DIP switch on front panel of CPU Unit	
Pin 7	Pin 8
ON	OFF

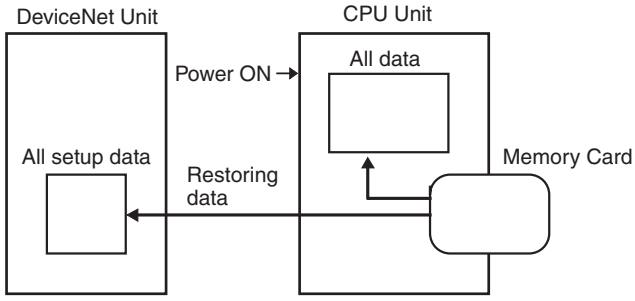

This operation will read the DeviceNet Unit setup data file from the Memory Card and restore the data in the DeviceNet Unit.

When the power supply is ON, the MCPWR indicator on the front of the CPU Unit will turn ON, flash once, and then will remain lit while data is being read. After the data is read correctly, the indicator will turn OFF.

Note The 7-segment display on the front panel will display “H8” when restoring data from a Memory Card fails. If this happens, the data on the Memory Card may not be correct. Make sure that the backup operation ends normally before performing the restore operation.

Comparing DeviceNet Unit Setup Files in Memory Card

Set the DIP switch on the front panel of the CPU Unit, as shown in the following table, and press down the Memory Card Power Supply Switch for 3 seconds.

DIP switch on front panel of CPU Unit	
Pin 7	Pin 8
OFF	OFF

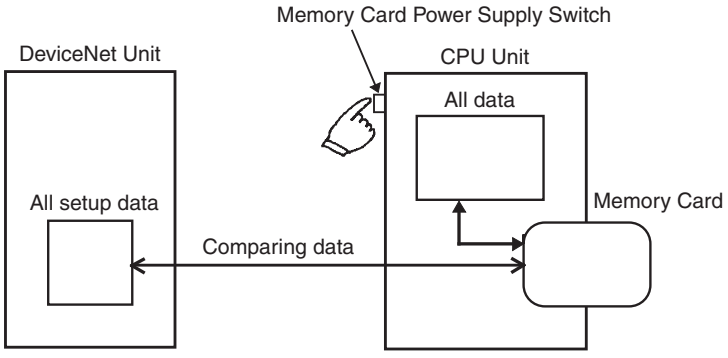

This operation will compare the data in the DeviceNet setup file in the Memory Card with the setup data in the DeviceNet Unit.

When the Memory Card Power Supply Switch is pressed, the MCPWR indicator on the front of the CPU Unit will flash once, and then will remain lit while data is being compared. If the data is the same, the indicator will turn OFF.

Note The following table compares the simple backup functions with the Memory Card backup functions described in *7-2 Memory Card Backup Functions*.

Function		Simple backup	Memory Card backup
Applicable CPU Units	CS Series	CS1-H CPU Units only	CS1 CPU Units (-V□) CS1-H CPU Units
	CJ Series	CJ1-H CPU Units CJ1M CPU Units	CJ1 CPU Units CJ1-H CPU Units
Applicable DeviceNet Units	CS Series	CS1W-DRM21-V1 only	CS1W-DRM21-V1 CS1W-DRM21
	CJ Series	CJ1W-DRM21	CJ1W-DRM21
Back up, restore, and compare data		The following setup data in the DeviceNet Unit's internal non-volatile memory (EEPROM): • Master scan lists • Slave scan lists • Message monitoring timer lists • Communications cycle time settings • Master/slave functions enabled/disabled settings	
File name		BACKUP□□.PRM (□□: Unit address = Unit number + 10 hex)	DNnnBKUP.dvf (nn: Unit number in 2-digit hexadecimal)
Compatibility with DeviceNet Configurator device parameter file		No	Yes **Note** The file must have the same extension (.dvf) as the device parameter file created using DeviceNet Configurator.
Storage media		Memory Card mounted in CPU Unit	
Operating method	Backing up data to Memory Card	Turn ON pin 7 and turn OFF pin 8 of the CPU Unit's DIP switch, and press down the Memory Card Power Supply Switch for three seconds.	Turn OFF the Setup File Backup Switch (word n+1, bit 15) and then turn it ON again.
	Restoring data from Memory Card	Turn ON pin 7 and turn OFF pin 8 of the CPU Unit's DIP switch, and turn ON the power to the CPU Unit.	Turn OFF the Unit Setup File Restore Switch (word n+1, bit 14) and then turn it ON again.
	Comparing data with Memory Card	Turn OFF pins 7 and 8 of the CPU Unit's DIP switch, and press down the Memory Card Power Supply Switch for three seconds.	None
Main applications		• Replacing the entire PLC including the CPU Unit and other Units (Serial Communications Units/Boards, etc.)	• Replacing the DeviceNet Unit only. • Using the DeviceNet Configurator to create setup data, save it in the Memory Card, and then write the data to the DeviceNet Unit from the Memory Card. • Using multiple DeviceNet Units with the same settings (copying the settings from the Memory Card to multiple DeviceNet Units).

SECTION 8
Communications Timing

This section describes the time required for remote I/O communications and message communications.

8-1 Remote I/O Communications Characteristics 194
8-1-1 Communications Cycle Time and Refresh Time 194
8-1-2 I/O Response Time 197
8-1-3 More than One Master in Network 199
8-1-4 System Startup Time 199
8-2 Message Communications 200
8-2-1 Message Communications Time 200
8-2-2 Calculating the Maximum Message Response Time 201

8-1 Remote I/O Communications Characteristics

This section describes the characteristics of remote I/O communications when the DeviceNet Unit is used as a master in combination with OMRON's slaves. Use this section for reference when planning operations that require precise I/O timing.

The equations provided here are valid under the following conditions:

1,2,3...

1. The DeviceNet Unit is operating with the scan list enabled.
2. All of the required Slaves are participating in communications.
3. No errors are being indicated at the DeviceNet Unit
4. Messages aren't being produced in the Network (from another company's configurator, for example).

Note The values provided by these equations may not be accurate if another company's Master or Slave is being used in the Network.

8-1-1 Communications Cycle Time and Refresh Time

This section explains the communications cycle time, communications time per slave, and refresh time required for calculating processing time by the DeviceNet Unit.

Communications Cycle Time

The communications cycle time is the time from the completion of a Slave's remote I/O communications processing until remote I/O communications with the same Slave are processed again. The communications cycle time is used to calculate the maximum I/O response time.

The communications cycle time depends on the number of Masters in the Network and on whether or not message communications are being performed. The following explanation is for a network with one Master. For networks with several Masters, refer to *More than One Master in Network* in the following section.

Communications Cycle Time Graph

The following graph shows communications cycle time for the number of slaves when there are both 16-point output and 16-point input slaves.
Inputs: Bit strobe, Outputs: Poll connection

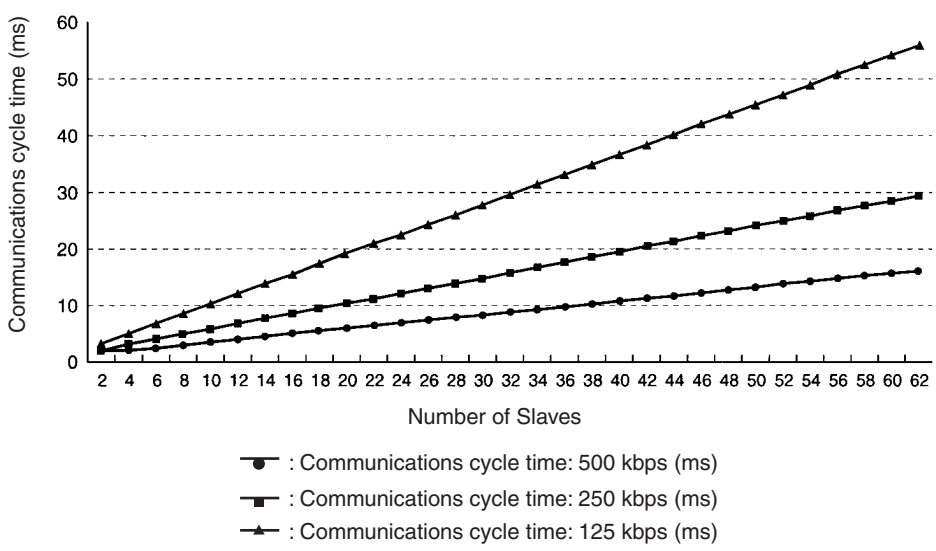

Communications Cycle Time Calculation

Use the equations shown below to calculate the communications cycle time (T_{RM}) for a network with one Master. Note that if the result of this calculation is less than 2 ms, the actual communications cycle time will be 2 ms.

T_{RM}= Σ (Communications time per Slave)
+ High-density Unit processing time
+ Explicit message communications time
+ COS/Cyclic connection time (ms)
+ 0.01 × N + 1.0 [ms]

Communications Time per Slave:

This is the communications time required for a single Slave.
"Σ (Communications time per Slave)" represents the total of the "Communications time per Slave" for all the Slaves in the network.

High-density Unit Processing Time:

3.5 ms
This is added if there are any Slaves in the network that use at least 8 bytes for input, output, or both.

Explicit Message Communications Time:

$(0.11 \times T_B) \times n$ [ms]

The explicit message communications time is added as a delay time when explicit communications (sending or receiving) are performed.
n= Number of explicit messages (both sending and receiving) that occur in one cycle time
T_B = The baud rate factor
(500 kbps: T_B = 2; 250 kbps: T_B = 4; 125 kbps: T_B = 8)

COS/Cyclic Connection Time:

$\{(0.05+0.008 \times S) \times T_B\} \times n$ (ms)

The COS/cyclic connection time is added as a delay time when COS/cyclic communications are performed.
S: Total number of inputs and outputs in the COS/cycle connection (bytes)
T_B: The baud rate factor
(500 kbps: T_B = 2; 250 kbps: T_B = 4; 125 kbps: T_B = 8)
n: Number of nodes occurring simultaneously within 1 communications cycle time in the COS/Cyclic connection
N: Number of Slaves

Communications Time/Slave

The communications time per Slave is the communications time required for a single Slave.

The following equations show the communications time/Slave (T_{RT}) for each kind of Slave Unit.

The communications time for each slave is not related to the type of connection (protocol) used by the slave.

Output Slaves with Less Than 8 Bytes of Output

$T_{RT} = 0.016 \times T_B \times S_{OUT1} + 0.11 \times T_B + 0.07$ [ms]
S_{OUT1} : The number of Output Slave output words
T_B : The baud rate factor
(500 kbps: T_B = 2; 250 kbps: T_B = 4; 125 kbps: T_B = 8)

Input Slaves with Less Than 8 Bytes of Input

$T_{RT} = 0.016 \times T_B \times S_{IN1} + 0.06 \times T_B + 0.05$ [ms]
S_{IN1} : The number of Input Slave input words
T_B : The baud rate factor
(500 kbps: T_B = 2; 250 kbps: T_B = 4; 125 kbps: T_B = 8)

Mixed I/O Slaves with Less Than 8 Bytes of Input or Output

$T_{RT} = 0.016 \times T_B \times (S_{OUT2} + S_{IN2}) + 0.11 \times T_B + 0.07$ [ms]

S_{OUT2} : The number of Mixed I/O Slave output words
S_{IN2} : The number of Mixed I/O Slave input words
T_B : The baud rate factor
(500 kbps: $T_B = 2$; 250 kbps: $T_B = 4$; 125 kbps: $T_B = 8$)

Slaves with More Than 8 Bytes of Input or Out put

$T_{RT} = T_{OH} + T_{BYTE\text{-}IN} \times B_{IN} + T_{BYTE\text{-}OUT} \times B_{OUT}$ [ms]

T_{OH} : Protocol overhead
$T_{BYTE\text{-}IN}$: The input byte transmission time
B_{IN} : The number of input words
$T_{BYTE\text{-}OUT}$: The output byte transmission time
B_{OUT} : The number of output words

Baud rate	T_{OH}	$T_{BYTE\text{-}IN}$	$T_{BYTE\text{-}OUT}$
500 kbps	0.306 ms	0.040 ms	0.036 ms
250 kbps	0.542 ms	0.073 ms	0.069 ms
125 kbps	1.014 ms	0.139 ms	0.135 ms

For Input Slaves take B_{OUT} to be 0, and for Output Slaves take B_{IN} to be 0.

Refresh Time

The refresh time is the time required for I/O data to be exchanged between the PLC's CPU Unit and the DeviceNet Unit. The CPU Unit's cycle time is increased when a DeviceNet Unit is mounted, as shown below.

Processing item	Processing time
I/O refresh	DeviceNet Unit I/O refreshing time (ms) 0.7 + 0.001 × the number of words refreshed (See note 1.)

Note

1. The number of words refreshed is the total number of words in the I/O area that are used by the Slaves, including any unused words between words actually used by the Slaves. For example, if there are only two Input Slaves with node addresses 1 and 5, the 5 input words for nodes 1 through 5 would be refreshed even though the input words for nodes 2, 3, and 4 are unused.
2. If message communications are being performed, just add the number of words used in message communications to the above number of words for whenever messages are being processed.
3. When the message communications are performed, an event execution time must be added to the PLC cycle time.
4. For details about refresh time or PLC cycle time, refer to operation manual of the PLC.

8-1-2 I/O Response Time

Maximum I/O Response Time

Communications Cycle Time ≥ PLC Cycle Time

The maximum I/O response time will be as shown below if the DeviceNet Unit takes in data immediately after I/O refreshing and if the communications cycle time is longer than the PLC cycle time.

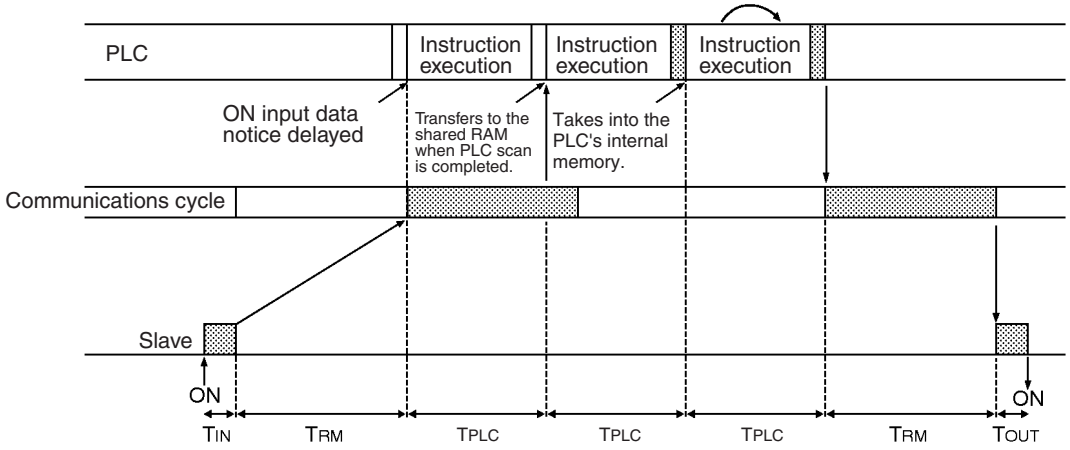

T_{IN}: The Input Slave's ON (OFF) delay

T_{OUT}: The Output Slave's ON (OFF) delay

T_{RM}: Network's communications cycle time (See page 195.)

T_{PLC}: The PLC's cycle time (See note below.)

Note The PLC's cycle time will be delayed as shown below for one DeviceNet Unit. For details, refer to *Refresh Time* on page 196.

0.7 ms + (number of occupied words × 0.001 ms)

The maximum I/O response time (T_{MAX}) is the total of the following terms:

$$T_{MAX} = T_{IN} + T_{RM} \times 2 + T_{PLC} \times 3 + T_{OUT}$$

Communications Cycle Time < PLC Cycle Time

The maximum I/O response time will be as shown below if the DeviceNet Unit takes in data immediately after I/O refreshing and if the communications cycle time is shorter than the PLC cycle time.

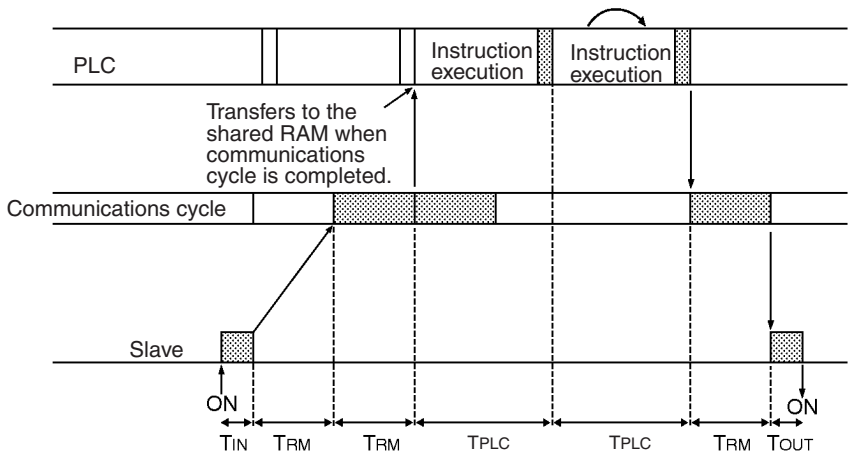

T_{IN}: The Input Slave's ON (OFF) delay

T_{OUT}: The Output Slave's ON (OFF) delay

T_{RM}: Network's communications cycle time (See page 195.)

T_{PLC}: The PLC's cycle time (See note below.)

Note The PLC's cycle time will be delayed as shown below for one DeviceNet Unit. For details, refer to *Refresh Time* on page 196.

0.7 ms + (number of occupied words × 0.001 ms)

The maximum I/O response time (T_{MAX}) is the total of the following terms:

$$T_{MAX} = T_{IN} + T_{RM} \times 2 + T_{PLC} \times 2 + T_{OUT}$$

Note
1. Refer to the *DeviceNet Slaves Operation Manual* (W347 or W404) for details on the Input and Output Slaves' delay times.
2. Refer to *Refresh Time* on page 196 and to the PLC's Operation Manual for details on the PLC's cycle time.

Minimum I/O Response Time

The minimum I/O response time occurs when the Slave's I/O refreshing is executed just after the input signal is received by the DeviceNet Unit and the output signal is output at the beginning of the next I/O refresh cycle.

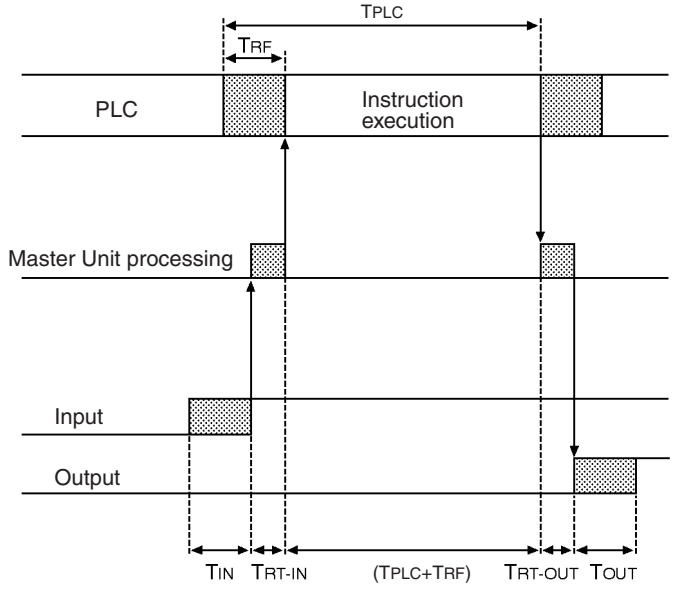

T_{IN}: The Input Slave's ON (OFF) delay

T_{OUT}: The Output Slave's ON (OFF) delay

$T_{RT\text{-}IN}$: Input Slave's communications time/Slave (See page 195.)

$T_{RT\text{-}OUT}$: Output Slave's communications time/Slave (See page 195.)

T_{PLC}: The PLC's cycle time

T_{RF}: The PLC's DeviceNet Unit refresh time (See page 196.)

The minimum I/O response time (T_{MIN}) is the total of the following terms:

$$T_{MIN} = T_{IN} + T_{RT\text{-}IN} + T_{PLC} + T_{RF} + T_{RT\text{-}OUT} + T_{OUT}$$

Note
1. Refer to the *DeviceNet Slaves Operation Manual* (W347 or W404) for details on the Input and Output Slaves' delay times.
2. Refer to *Refresh Time* on page 196 and to the PLC's Operation Manual for details on the PLC's cycle time.

8-1-3 More than One Master in Network

The following equation shows the remote I/O communications cycle time (T_{RM}) when there is more than one master in the network. An example for two masters is used.

First, the network is divided into two groups: Master A and the slaves in remote I/O communications with it and master B and the slaves in remote I/O communications with it.

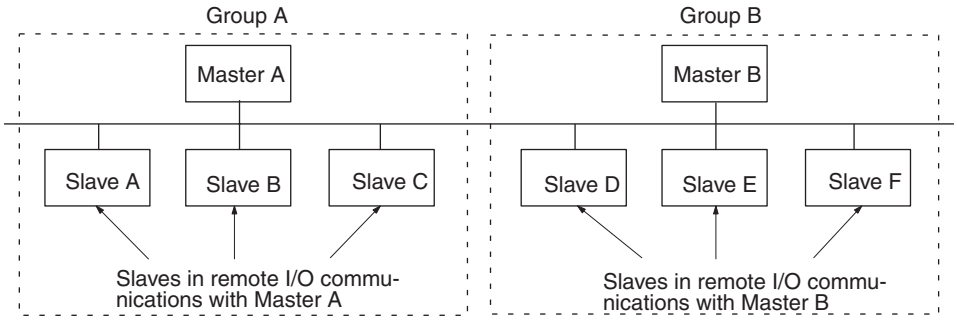

Note Although in the above diagram the Slaves are separated into two groups for convenience, the actual physical positions in the Network are irrelevant.

Next, we can refer to *8-1-1 Communications Cycle Time and Refresh Time* and calculate the communications cycle time for each group as if they were separate Networks.

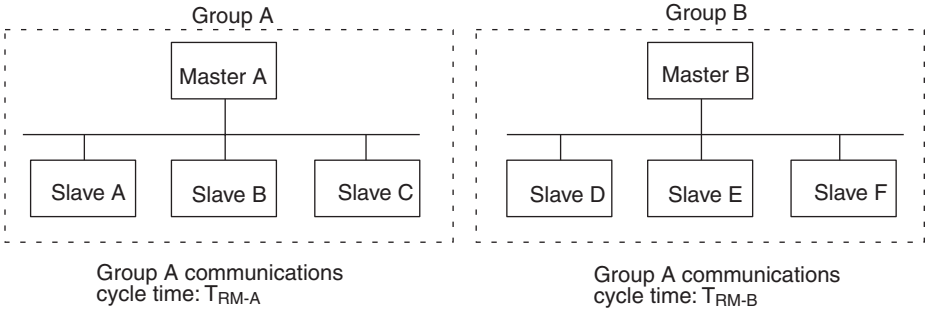

In Networks with two Masters, the communications cycle time for the entire Network will be the sum of the communications cycle times for the groups.

$$T_{RM} = T_{RM-A} + T_{RM-B}$$

Although this example shows only two Masters in the Network, the total communications cycle time for any Network can be calculated by dividing it into groups and adding the communications cycle times of all groups.

8-1-4 System Startup Time

Master Function

This section describes the system startup time for a network operating with the scan list enabled. The system startup time is the delay from the time that the DeviceNet Unit (master) is turned ON until remote I/O communications begin. Here, we assume that the scan list is enabled and that remote I/O communications are set to start automatically at startup.

The following table shows the system startup times for two cases. In the first case, the DeviceNet Unit starts up just after all of the Slaves' power supplies are turned ON. In the second case, the DeviceNet Unit is restarted while communications are in progress.

Case	Slave's indicator status	System startup time
The Master is started just after Slave startup.	The NS indicator is OFF or flashing green.	5 seconds
Just the Master is restarted.	The NS indicator is flashes red while the Master is OFF.	7 seconds
Just the Slaves are restarted.	---	9 seconds

Program Example

As shown in the preceding table, it takes time for DeviceNet communications to start up. This programming uses flags in the Master status area to prevents the Slaves' I/O processing from being performed until remote I/O communications start up.

This programming is for a DeviceNet Unit with a unit number of 00.

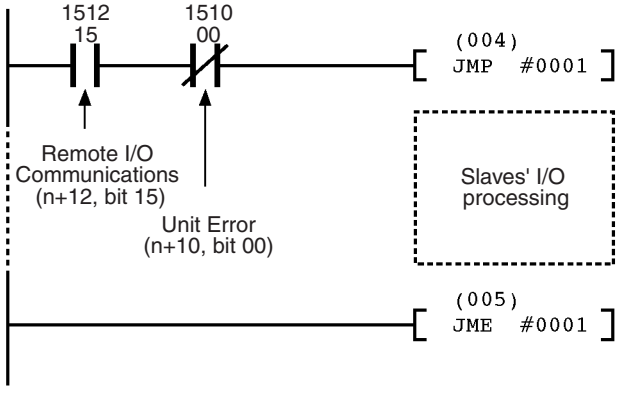

Note Refer to *3-2 Allocated CIO Area Words* for details on the Master Status Area.

Slave Function

It takes approximately four seconds from the time that the Devicenet Unit is turned ON or restarted as a slave until remote I/O communications with the master begin.

8-2 Message Communications

8-2-1 Message Communications Time

The message communications time is the time required from the time a Master Unit starts to send a message over the Network to another node until the Master Unit completes sending the message (data for SEND(192)/RECV(193) and FINS commands for CMND(194)/IOWR).

The following equation can be used to compute the approximate message communications time.

Message communications time =

Communications cycle time x ((No. of message bytes + 15) ÷ 6 + 1)

No. of message bytes: No. of data bytes following the FINS command code

The communications cycle time depends on whether or not remote I/O communications are being used.

Message Communications Only (No Remote I/O Communications)

The following equation can be used to compute the message communications time when remote I/O communications are not being used.

Communications cycle time =

2 (see note) + 0.11 × T_B + 0.6 [ms]

T_B : The baud rate factor
(500 kbps: $T_B = 2$; 250 kbps: $T_B = 4$; 125 kbps: $T_B = 8$)

Note The communications cycle time will be 2 ms even if remote I/O communications are not being used.

Remote I/O and Message Communications

Performing message communications in addition to remote I/O communications will increase the message communications time.

Communications cycle time=
Communications cycle time for remote I/O communications only
$+ 0.11 \times T_B + 0.6$ [ms]

T_B : The baud rate factor
(500 kbps: $T_B = 2$; 250 kbps: $T_B = 4$; 125 kbps: $T_B = 8$)
(Varies depending on the baud rate.)

Note

1. If the CPU Unit attempts to send another message or receives a message from another node within the message communications time, the second message or the message being received from another node may be destroyed. Never execute a second communications instruction before the message communications time has elapsed and never send messages to any one node at intervals less than the message communications time.
2. If send or receive messages are destroyed, error records will be placed in the error history of the Master Unit. If an error occurs, read the error history using the FINS command or monitor the error history from the Configurator.
3. The above equations can be used to find the approximate message communications time, but this is a typical time, not the maximum time. The message communications time will vary depending on the frequency of message communications, the load on the remote node, the communications cycle time, and other factors. For any one Master Unit, the message communications time can be greatly increased due to heavy loads and the user program must be written to allow for this.

8-2-2 Calculating the Maximum Message Response Time

The message response time is the time required from the time a DeviceNet Unit starts to receive an I/O memory read request message (BYTE DATA READ explicit message) until the DeviceNet Unit completes sending the response message to the client.

The message response times described below are based on the following conditions:

1,2,3...

1. Only one DeviceNet Unit is mounted.
2. The I/O memory read request is returned from CS/CJ-series PLC in two cycle time.
3. Baud rate: 500 Kbps
4. Communications cycle time: 3 ms (no remote I/O communications)
5. PLC's cycle time: 10 ms
6. DeviceNet Unit's refresh time: 2 ms (See note.)

   Note The PLC's cycle time will be delayed as shown below for one DeviceNet Unit. For details, refer to *Refresh Time* on page 196.
   0.7 ms + (number of occupied words × 0.001 ms)

Request from One Client (BYTE DATA READ)

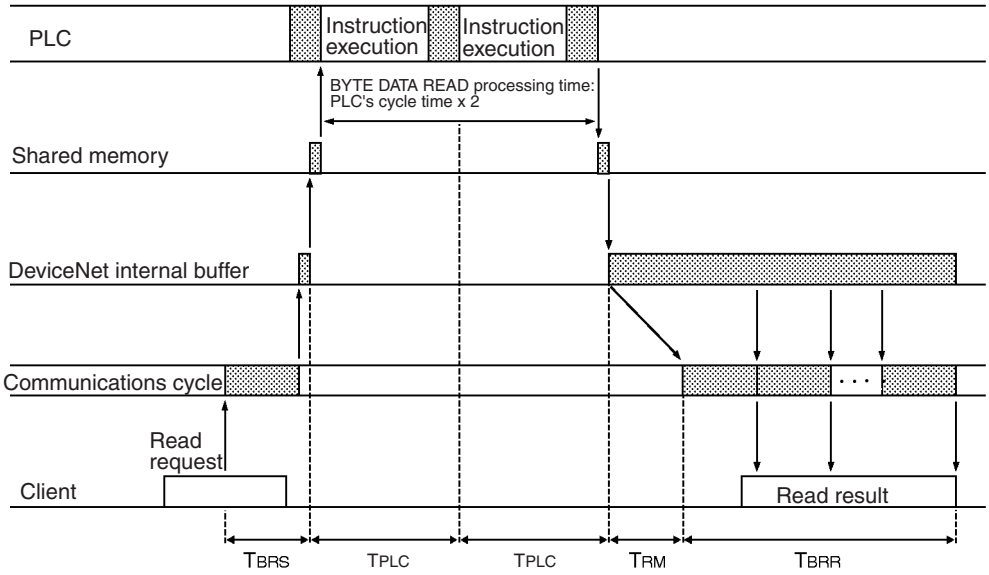

Shown below is the response time required to return data for 100 words.

- BYTE DATA READ request sending time: T_{BRS}
  DeviceNet header (4 bytes) + Parameters (3 bytes) = 7 bytes (no fragment)
  Therefore, T_{BRS} = 1 communications cycle time (T_{RM}) = 3 ms
- PLC's processing time: T_{PC} x 2
  T_{PLC} x 2 = PLC's cycle time x 2 = 10 x 2 = 20 ms
- BYTE DATA READ response receiving time: T_{BRR}
  DeviceNet header (3 bytes) + Number of words to be read x 2 = 203 bytes
  Therefore, T_{BRR} = 1 + 203 bytes/6 communications cycle time = 35 communications cycle time
- DeviceNet Unit refresh time: T_{RF} = 2 ms

The message response time will be as follows:

= T_{RM} + T_{PLC} x 2 + T_{RM} x 35 + T_{RF} x 2 =3+20+105+4
= 132 ms

Shown below is the response time required to return data for 100 words to 8 clients.

- BYTE DATA READ request sending time: T_{BRS}
  DeviceNet header (4 bytes) + Parameters (3 bytes) = 7 bytes (no fragment)
  Therefore, T_{BRS} = 1 communications cycle time (T_{RM}) = 3 ms
- PLC's processing time: T_{PLC} x 6 + T_{PLC} x 2 = T_{PLC} x 8
  The following time is required to process data with other clients before the PLC starts processing.
  7 other clients/2 = Approximately cycle time x 3
  If one processing requires twice the cycle time, the time will be as follows:
  Cycle time x 3 x 2 = Cycle time x 6
  PLC's processing time: T_{PLC} x 2 = Cycle time x 2
  Total time will be as follows:
  Cycle time x 8

- BYTE DATA READ response receiving time: T_{BRR}
  DeviceNet header (3 bytes) + Number of words to be read x 2 = 203 bytes
  Therefore, T_{BRR} = 1 + 203 bytes/6 communications cycle time = 35 communications cycle time
- DeviceNet Unit refresh time: T_{RF} = 2 ms

The message response time will be as follows:

$= T_{RM} + T_{PLC} \times 8 + T_{RM} \times 35 + T_{RF} \times 2 \times 8 = 3+80+105+32$
$= 220$ ms

Note The above equations can be used to find the approximate message response time, but this is the typical time, not the maximum time. The message response time will vary depending on the frequency of message communications, the load on the remote node, the communications cycle time, and other factors. For any one DeviceNet Unit, the message communications time can be greatly increased due to heavy loads and the user program must be written to allow for this.

SECTION 9
Troubleshooting and Maintenance

This section describes error processing, periodic maintenance operations, and troubleshooting procedures needed to keep the DeviceNet network operating properly. We recommend reading through the error processing procedures before operation so that operating errors can be identified and corrected more quickly.

9-1 Troubleshooting with the DeviceNet Unit Indicators 206
9-1-1 Determining Operating Status from the Indicators. 206
9-1-2 Troubleshooting Errors Occurring in the DeviceNet Unit 207
9-2 Error Log Functions 224
9-2-1 Error Log Table. 224
9-2-2 Error Codes and Detail Codes 225
9-3 Troubleshooting 228
9-3-1 CPU Unit's ERR/ALM Indicator Lit or Flashing. 228
9-3-2 Remote I/O Communications Disabled 228
9-3-3 I/O Link Problems 229
9-3-4 Communications Error Operation Settings. 230
9-3-5 Scan List Problems 230
9-4 Maintenance and Replacement 231
9-4-1 Cleaning 231
9-4-2 Inspection 231
9-4-3 Replacing Faulty Units 232

9-1 Troubleshooting with the DeviceNet Unit Indicators

9-1-1 Determining Operating Status from the Indicators

The following table shows the status of the MS and NS indicators and the 7-segment display during normal operation.

Indicator status			Network/Unit status	Comments
MS	**NS**	**7-segment**		
OFF	OFF	OFF	Initializing with PLC	Initialization processing with the PLC is in progress. Restart the DeviceNet Unit if this status continues for an extended period of time. Replace the CPU Unit and/or DeviceNet Unit if the problem is not corrected by restarting.
ON (green)	OFF	Master's node address (flashing)	Checking for node address duplication	The node address duplication check is performed after initialization.
ON (green)	Flashing (green)	Master's node address (flashing)	Waiting for remote I/O communications	The Unit will have this status until remote I/O communications are performed with the master or slave function. (When both functions are operating, the Unit will have this status until remote I/O communications are performed with either function.)
		Master's node address	Waiting for message communications connection	The Unit will have this status when both the master and slave functions are disabled and the Unit is waiting for a connection by message communications.
ON (green)	ON (green)	Master's node address	Remote I/O or message communications in progress.	This is the normal display when the master and/or slave is active.
ON (green)	ON (green)	- - (flashing)	Scan list operation in progress.	The scan list is being saved in flash memory or the scan list is being cleared.

9-1-2 Troubleshooting Errors Occurring in the DeviceNet Unit

Error category	Error		Indicators			Error log (Hex)	Page
			7-segment	MS	NS		
Master function	Remote I/O communications stopped by a communications error		A0	---	---	0346	208
Software settings errors	CPU Unit status error		C0	---	---	---	213
	Unit status error		C2	---	---	---	213
	Structure error		C4	---	---	---	213
	Incorrect setting		C5	---	---	---	214
	Multiple switches ON		C6	---	---	---	214
Master function	Structure errors	I/O area duplication	d0	---	Red (flashing)	0343	208
		I/O area range exceeded	d1	---		0343	209
		Unsupported slave	d2	---		0343	209
	Verification errors	Non-existent slave	d5	---		0344	209
		Illegal vendor	d6	---		0344	210
		Illegal connection path	d6	---		0344	210
		I/O size mismatch	d6	---		0344	211
		Illegal device	d6	---		0344	211
		Illegal product code	d6	---		0344	211
		Unsupported connection	d6	---		0344	212
	Remote I/O communications error		d9	---	Red (flashing)	0345	212
Network errors	Network power supply error		E0	---	OFF or Red (flashing)	0341	214
	Transmission timeout error		E2	---		0342	215
Memory access errors	Message monitoring timer list logic error		E6	Red (flashing)	---	021A	216
	Slave scan list logic error		E7		---	021A	217
	Master scan list logic error		E8		---	021A	217
	Memory access error		E9		---	0602	218
Network errors	Node address duplication		F0	---	Red (lit)	0211	215
	Bus Off detected		F1	---		0340	216
CPU Unit exchange	Unit number duplication		H1	Red (flashing)	OFF	---	219
	CPU Unit faulty (H2)		H2			---	219
	DeviceNet Unit faulty		H3	Red (lit)	OFF	---	219
	Node address setting error		H4	Red (flashing)	OFF	---	219
	Communications speed setting error		H5			---	219
	CPU Unit faulty (H6)		H6			000F	220
	I/O table not registered		H7			0006	220
	Simple backup function restore error		H8		---	---	220
	CPU Unit memory faulty		HA			0012	220
	CPU Unit faulty (Hb)		Hb			0011	221
	Routing table logic error		HC			021A	221
	I/O refresh error		Hd			0347	221
	CPU Unit service monitoring error		HE			0002	222
	CPU Unit watchdog timer error		HF			0001	223
Slave function	Remote I/O communications error		L9	---	Red (flashing)	0345	223
Unit errors	Special Unit error		OFF	Red (lit)	OFF	0601	
CPU Unit exchange	CPU Unit fatal error		---	---	---	---	223
	Output OFF error		---	---	---	---	

Note 1. The 7-segment display will alternate between the Unit's node address and the code given in the tables in this section.

2. When a (master function) structure error or verification error occurs, only the most recent error is displayed for each slave. If the Unit is set to stop

remote I/O communications for a communications error, two errors can be displayed: The slave's communications error and its most recent error.

Master Errors

Remote I/O Communications Stopped by a Communications Error

7-segment	MS indicator	NS indicator	Error log (Hex)
A0	---	---	0346

Likely Cause

Pin 3 on the master's DIP switch is set to stop communications in the event of a communications error and communications have been stopped due to a remote I/O communications error, network power supply error, or transmission timeout.

DeviceNet Unit Response

Remote I/O communications as a master will stop. Remote I/O communications as a slave and message communications will continue.

Flags Allocated for C200H DeviceNet Master Unit (CIO n+24)

Bit 14 (the Error Flag) will be ON as well as bit 05 or 06 (the Sending Error Flag or Communications Error Flag).

CIO Area Flags Allocated to DeviceNet Unit

Bit 00 of n+10 (Unit Error Flag) will be ON together with one of the following combinations:

- Bit 02 of n+12 (the Remote I/O Communications Error Flag) and bit 01 of n+10 (the Master Function Error Flag) ON.
- Bit 07 of n+10 (the Network Power Error Flag) ON.
- Bit 08 of n+10 (the Send Timeout Flag) ON.

Correction

Perform error processing according to the cause:

- Remote I/O communications error (See error d9.)
- Network power supply error (See error E0.)
- Transmission timeout error (See error E2.)

Correct the cause of the error and then restart remote I/O communications by toggling bit 02 of n (the Remote I/O Communications Start Switch.)

Structure Error: I/O Area Duplication

7-segment	MS indicator	NS indicator	Error log (Hex)
d0	---	Red (flashing)	0343

Likely Cause

The slave's I/O areas overlap. (Occurred with the scan list disabled.)
Errors will occur in the active slaves.

DeviceNet Unit Response

Records the error in the error log.
The master will periodically attempt to reconnect with the slave with the structure error.

Flags Allocated for C200H DeviceNet Master Unit (CIO n+24)

Bit 14 (the Error Flag) and bit 04 (the Structure Error Flag) will be ON.

CIO Area Flags Allocated to DeviceNet Unit

Bit 01 of n+12 (the Structure Error Flag) and bits 00 and 01 of n+10 (the Unit Error Flag and Master Function Error Flag) will be ON.

Correction

Set the slaves' node addresses again.

Structure Error: I/O Area Range Exceeded

7-segment	MS indicator	NS indicator	Error log (Hex)
d1	---	Red (flashing)	0343

Likely Cause

The slave's I/O area isn't within the allowed range. (Occurs with the scan list disabled.)

DeviceNet Unit Response

Records the error in the error log. The master will periodically attempt to reconnect with the slave with the structure error.

Flags Allocated for C200H DeviceNet Master Unit (CIO n+24)

Bit 14 (the Error Flag) and bit 04 (the Structure Error Flag) will be ON.

CIO Area Flags Allocated to DeviceNet Unit

Bit 01 of n+12 (the Structure Error Flag) and bits 00 and 01 of n+10 (the Unit Error Flag and Master Function Error Flag) will be ON.

Correction

Set the slaves' node addresses again or use user-set allocations.

Structure Error: Unsupported Slave

7-segment	MS indicator	NS indicator	Error log (Hex)
d2	---	Red (flashing)	0343

Likely Cause

The size of the slave's input and/or output area exceeded 200 bytes. (Occurs with the scan list disabled.)

DeviceNet Unit Response

Records the error in the error log.
The master will periodically attempt to reconnect with the slave with the structure error.

Flags Allocated for C200H DeviceNet Master Unit (CIO n+24)

Bit 14 (Error Flag) and bit 04 (the Structure Error Flag) will be ON.

CIO Area Flags Allocated to DeviceNet Unit

Bit 01 of n+12 (Structure Error Flag) and bits 00 and 01 of n+10 (Unit Error Flag and Master Function Error Flag) will be ON.

Correction

Use slaves with input and output areas of 200 bytes max.

Verification Error: Non-existent Slave

7-segment	MS indicator	NS indicator	Error log (Hex)
d5	---	Red (flashing)	0344

Likely Cause

A slave registered in the scan list doesn't exist or the local node's (master's) node address is registered in the scan list. (Occurs with the scan list enabled.)

DeviceNet Unit Response

Records the error in the error log.

- If a slave is involved, the master will periodically attempt to reconnect.
- If the master is involved, it will not send an OPEN frame to itself.

Flags Allocated for C200H DeviceNet Master Unit (CIO n+24)

Bit 14 (Error Flag) and bit 07 (Comparison Error Flag) will be ON.

CIO Area Flags Allocated to DeviceNet Unit

Bit 00 of n+12 (Comparison Error Flag) and bits 00 and 01 of n+10 (Unit Error Flag and Master Function Error Flag) will be ON.

Correction

Check the following:

- Matching master and slave baud rates
- Proper cable lengths (trunk and branch lines)
- Broken or loose cables
- Installation of terminators at both ends of the trunk line
- Excessive noise

Verification Error: Illegal Vendor

7-segment	MS indicator	NS indicator	Error log (Hex)
d6	---	Red (flashing)	0344

Likely Cause

The Configurator is set to check the vendor and the slave's vendor does not match the registered scan list. (Occurs with the scan list enabled.)

DeviceNet Unit Response

Records the error in the error log.
The master will periodically attempt to reconnect with the slave with the verification error.

Flags Allocated for C200H DeviceNet Master Unit (CIO n+24)

Bit 14 (Error Flag) and bit 07 (Comparison Error Flag) will be ON.

CIO Area Flags Allocated to DeviceNet Unit

Bit 00 of n+12 (Comparison Error Flag) and bits 00 and 01 of n+10 (Unit Error Flag and Master Function Error Flag) will be ON.

Correction

Inspect the slave and then create the scan list again.

Verification Error: Illegal Connection Path

7-segment	MS indicator	NS indicator	Error log (Hex)
d6	---	Red (flashing)	0344

Likely Cause

The connection path was set with the Configurator and there is a mistake in the connection path setting in the scan list. (Occurs with the scan list enabled.)

DeviceNet Unit Response

Records the error in the error log.
The master will periodically attempt to reconnect with the slave with the verification error.

Flags Allocated for C200H DeviceNet Master Unit (CIO n+24)

Bit 14 (Error Flag) and bit 07 (Comparison Error Flag) will be ON.

CIO Area Flags Allocated to DeviceNet Unit

Bit 00 of n+12 (Comparison Error Flag) and bits 00 and 01 of n+10 (Unit Error Flag and Master Function Error Flag) will be ON.

Correction

Inspect the slave and then create the scan list again.

Verification Error: I/O Size Mismatch

7-segment	MS indicator	NS indicator	Error log (Hex)
d6	---	Red (flashing)	0344

Likely Cause

The slave's I/O data size does not match the registered scan list. (Occurs with the scan list enabled.)

DeviceNet Unit Response

Records the error in the error log.
The master will periodically attempt to reconnect with the slave with the verification error.

Flags Allocated for C200H DeviceNet Master Unit (CIO n+24)

Bit 14 (Error Flag) and bit 07 (Comparison Error Flag) will be ON.

CIO Area Flags Allocated to DeviceNet Unit

Bit 00 of n+12 (Comparison Error Flag) and bits 00 and 01 of n+10 (Unit Error Flag and Master Function Error Flag) will be ON.

Correction

Inspect the slave and then create the scan list again.

Verification Error: Illegal Device

7-segment	MS indicator	NS indicator	Error log (Hex)
d6	---	Red (flashing)	0344

Likely Cause

The Configurator is set to check the device type and the slave's device type does not match the registered scan list. (Occurs with the scan list enabled.)

DeviceNet Unit Response

Records the error in the error log.
The master will periodically attempt to reconnect with the slave with the verification error.

Flags Allocated for C200H DeviceNet Master Unit (CIO n+24)

Bit 14 (Error Flag) and bit 07 (Comparison Error Flag) will be ON.

CIO Area Flags Allocated to DeviceNet Unit

Bit 00 of n+12 (Comparison Error Flag) and bits 00 and 01 of n+10 (Unit Error Flag and Master Function Error Flag) will be ON.

Correction

Inspect the slave and then create the scan list again.

Verification Error: Illegal Product Code

7-segment	MS indicator	NS indicator	Error log (Hex)
d6	---	Red (flashing)	0344

Likely Cause

The Configurator is set to check the product code and the slave's product code does not match the registered scan list. (Occurs with the scan list enabled.)

DeviceNet Unit Response

Records the error in the error log.
The master will periodically attempt to reconnect with the slave with the verification error.

Flags Allocated for C200H DeviceNet Master Unit (CIO n+24)

Bit 14 (Error Flag) and bit 07 (Comparison Error Flag) will be ON.

CIO Area Flags Allocated to DeviceNet Unit

Bit 00 of n+12 (Comparison Error Flag) and bits 00 and 01 of n+10 (Unit Error Flag and Master Function Error Flag) will be ON.

Correction

Inspect the slave and then create the scan list again.

Verification Error: Unsupported Connection

7-segment	MS indicator	NS indicator	Error log (Hex)
d6	---	Red (flashing)	0344

Likely Cause

The device does not support the I/O service specified in the scan list. (Occurs with the scan list enabled.)

DeviceNet Unit Response

Records the error in the error log.
The master will periodically attempt to reconnect with the slave with the verification error.

Flags Allocated for C200H DeviceNet Master Unit (CIO n+24)

Bit 14 (Error Flag) and bit 07 (Comparison Error Flag) will be ON.

CIO Area Flags Allocated to DeviceNet Unit

Bit 00 of n+12 (Comparison Error Flag) and bits 00 and 01 of n+10 (Unit Error Flag and Master Function Error Flag) will be ON.

Correction

Inspect the slave and then create the scan list again.

Remote I/O Communications Error

7-segment	MS indicator	NS indicator	Error log (Hex)
d9	---	Red (flashing)	0345

Likely Cause

A timeout occurred during remote I/O communications using the master function. (The response from the slave timed out 6 consecutive times.)

DeviceNet Unit Response

Records the error in the error log.
The master will periodically attempt to reconnect with the slave with the error, but remote I/O communications will stop if the master is set to stop communications.

Flags Allocated for C200H DeviceNet Master Unit (CIO n+24)

Bit 14 (Error Flag) and bit 06 (Communications Error Flag) will be ON.

CIO Area Flags Allocated to DeviceNet Unit

Bit 02 of n+12 (Remote I/O Communications Error Flag) and bits 00 and 01 of n+10 (Unit Error Flag and Master Function Error Flag) will be ON.

Correction

Check the following:

- Matching master and slave baud rates
- Proper cable lengths (trunk and branch lines)
- Broken or loose cables
- Installation of terminators at both ends of the trunk line
- Excessive noise

Software Switch Setting Errors

CPU Unit Status Error

7-segment	MS indicator	NS indicator	Error log (Hex)
C0	---	---	---

Likely Cause

The software settings operation couldn't be performed because the CPU Unit wasn't in PROGRAM mode.

DeviceNet Unit Response

The only response is the error code displayed on the 7-segment display. The error display will be cleared the next time that a settings operation is completed normally.

Correction

Switch the CPU Unit to PROGRAM mode and try the operation again.

Unit Status Error

7-segment	MS indicator	NS indicator	Error log (Hex)
C2	---	---	---

Likely Cause

The setting operation failed because the Unit could not perform the requested process in its current status. The most common causes of Unit status errors during settings operations are listed below:

- The master was stopped and a software switch operation relating to the master function was performed. (This does not include the master enable operation.)
- The scan list was enabled and a software switch operation was performed that can only be performed while the scan list is disabled. (Scan list enable and fixed allocation setting operations)
- The scan list was disabled and a software switch operation was performed that can only be performed while the scan list is enabled. (Clear scan list and Backup Unit settings file operations)
- The slave was stopped and a software switch operation relating to the slave function was performed. (This does not include the slave enable operation.)

DeviceNet Unit Response

The only response is the error code displayed on the 7-segment display. The error display will be cleared the next time that a settings operation is completed normally.

Correction

Change the Unit's status to allow the operation and try the operation again.

Structure Error

7-segment	MS indicator	NS indicator	Error log (Hex)
C4	---	---	---

Likely Cause

The setting operation failed because a structure error occurred.

DeviceNet Unit Response

The only response is the error code displayed on the 7-segment display. The error display will be cleared the next time that a settings operation is completed normally.

Correction

Correct the cause of the structure error. (See errors d0 to d2.)

Incorrect Setting

7-segment	MS indicator	NS indicator	Error log (Hex)
C5	---	---	---

Likely Cause

There was an error in the parameters specified in the user settings and the requested settings could not be made.

DeviceNet Unit Response

The only response is the error code displayed on the 7-segment display. The error display will be cleared the next time that a settings operation is completed normally.

Correction

Check the parameters in the user settings and try the operation again.

Multiple Switches ON

7-segment	MS indicator	NS indicator	Error log (Hex)
C6	---	---	---

Likely Cause

Two or more software switches were ON simultaneously or a second software switch was turned ON before a prior operation was completed.

DeviceNet Unit Response

The only response is the error code displayed on the 7-segment display. The error display will be cleared the next time that a settings operation is completed normally.

Correction

Execute software switch operations one at a time.

Network Errors

Network Power Error

7-segment	MS indicator	NS indicator	Error log (Hex)
E0	---	OFF or Red (flashing)*	0341

Note The NS indicator will flash red if the error occurs during remote I/O communications, otherwise the indicator will be OFF.

Likely Cause

The communications power supply is not being supplied properly from the network.

DeviceNet Unit Response

Records the error in the error log.
As long as power isn't being supplied remote I/O communications will remain stopped and errors will be returned in response to requests for message transmissions. The indicator status, scanning, and message processing will

return to normal when the network power supply is restored, although scanning will not resume if the DeviceNet Unit is set to stop remote I/O communications when a communications error occurs.

Flags Allocated for C200H DeviceNet Master Unit (CIO n+24)

Bit 14 (Error Flag) and bit 05 (the Sending Error Flag) will be ON.

CIO Area Flags Allocated to DeviceNet Unit

Bits 00 and 07 of n+10 (the Unit Error Flag and Network Power Error Flag) will be ON.

Correction

Check the network power supply and the wiring of the network cables.

Transmission Timeout Error

7-segment	MS indicator	NS indicator	Error log (Hex)
E2	---	OFF or Red (flashing)*	0342

Note The NS indicator will flash red if the error occurs during remote I/O communications, otherwise the indicator will be OFF.

Likely Cause

A transmission request was not completed normally for one of the following reasons:

- There is not even one device such as a slave in the network.
- The communications speed settings are not the same in all of the nodes.
- CAN controller error

DeviceNet Unit Response

Records the error in the error log.
As long as transmission timeout is in effect, remote I/O communications will remain stopped and errors will be returned in response to requests for message transmissions. The indicator status, scanning, and message processing will return to normal when the network power supply is restored, although scanning will not resume if the DeviceNet Unit is set to stop remote I/O communications when a communications error occurs.

Flags Allocated for C200H DeviceNet Master Unit (CIO n+24)

Bit 14 (Error Flag) and bit 05 (the Sending Error Flag) will be ON.

CIO Area Flags Allocated to DeviceNet Unit

Bits 00 and 08 of n+10 (the Unit Error Flag and Send Timeout Flag) will be ON.

Correction

Check the following:

- Matching master and slave baud rates
- Proper cable lengths (trunk and branch lines)
- Broken or loose cables
- Installation of terminators at both ends of the trunk line
- Excessive noise

Node Address Duplication Error

7-segment	MS indicator	NS indicator	Error log (Hex)
F0	---	Red (lit)	0211

Likely Cause

The master's node address is also set on another node.

DeviceNet Unit Response

Records the error in the error log.

- The Unit will go off–line and communications will be disabled. Error responses will be returned to all communications requests.
- The exchange of data with the CPU Unit will continue.

Flags Allocated for C200H DeviceNet Master Unit (CIO n+24)

Bit 14 (Error Flag) and bit 01 (the Node Address Duplicated/Bus Off Flag) will be ON.

CIO Area Flags Allocated to DeviceNet Unit

Bits 00 and 06 of n+10 (the Unit Error Flag and Duplicated Node Address Flag) will be ON.

Correction

Check the node addresses set on other nodes in the network. Correct the settings to eliminate the duplication and restart the DeviceNet Units.

Bus Off Detected

7-segment	MS indicator	NS indicator	Error log (Hex)
F1	---	Red (lit)	0340

Likely Cause

A Bus Off condition was detected.

DeviceNet Unit Response

Records the error in the error log.

- The Unit will go off–line and communications will be disabled. Error responses will be returned to all communications requests.
- The exchange of data with the CPU Unit will continue.

Flags Allocated for C200H DeviceNet Master Unit (CIO n+24)

Bit 14 (Error Flag) and bit 01 (the Node Address Duplicated/Bus Off Flag) will be ON.

CIO Area Flags Allocated to DeviceNet Unit

Bits 00 and 05 of n+10 (the Unit Error Flag and Bus Off Flag) will be ON.

Correction

Check the following:

- Matching master and slave baud rates
- Proper cable lengths (trunk and branch lines)
- Broken or loose cables
- Installation of terminators at both ends of the trunk line
- Excessive noise

Memory Access Errors

Message Monitoring Timer List Logic Error

7-segment	MS indicator	NS indicator	Error log (Hex)
E6	Red (flashing)	---	021A

Likely Cause

There is an error in the contents of the message monitoring timer list stored in non-volatile memory.

DeviceNet Unit Response

Records the error in the error log.
Operation will continue using the default message monitoring timer values.

Flags Allocated for C200H DeviceNet Master Unit (CIO n+24)

Bit 14 (Error Flag) and bit 03 (the Structure Error Flag) will be ON.

CIO Area Flags Allocated to DeviceNet Unit

Bits 00 and 13 of n+10 (the Unit Error Flag and Incorrect Message Monitoring Timer List Data Flag) will be ON.

Correction

Use the Configurator to register the message monitoring timer list again.

Slave Scan List Logic Error

7-segment	MS indicator	NS indicator	Error log (Hex)
E7	Red (flashing)	---	021A

Likely Cause

There is an error in the contents of the slave scan list stored in non-volatile memory.

DeviceNet Unit Response

Records the error in the error log.

- The slave remote I/O communications will be stopped.
- Message processing and the exchange of data with the CPU Unit will continue. Normal operation will resume when the slave scan list is written normally. (Start the slave remote I/O communications.)

CIO Area Flags Allocated to DeviceNet Unit

Bits 00 and 03 of n+10 (the Unit Error Flag and Slave Error Flag) and bit 04 of n+14 (Invalid Setup Data Flag) will be ON.

Correction

Disable the slave, reset the allocations, and the enable the slave again or use the Configurator to reset the slave scan list.

Master Scan List Logic Error

7-segment	MS indicator	NS indicator	Error log (Hex)
E8	Red (flashing)	---	021A

Likely Cause

There is an error in the contents of the master scan list stored in non-volatile memory.

DeviceNet Unit Response

Records the error in the error log.

- The master remote I/O communications will be stopped.
- Message communications and the exchange of data with the CPU Unit as a slave will continue. Normal operation will resume when the master scan list is written normally. (Start the master remote I/O communications.)

Flags Allocated for C200H DeviceNet Master Unit (CIO n+24)

Bit 14 (Error Flag) and bit 03 (the Structure Error Flag) will be ON.

CIO Area Flags Allocated to DeviceNet Unit

Bits 00 and 01 of n+10 (the Unit Error Flag and Master Function Error Flag) and bit 04 of n+12 (the Invalid Scan List Data Flag) will be ON.

Correction

Clear the scan list and register the scan list again or use the Configurator to reset the master scan list.

Memory Access Error

7-segment	MS indicator	NS indicator	Error log (Hex)
E9	Red (flashing)	---	0602

Likely Cause

An error occurred in the Unit's non-volatile memory itself. This error will occur in the following cases.

1,2,3...

1. An error occurs reading the identity information during initialization
2. All error log records cannot be used during initialization or registering an error log record
3. An error occurs while reading or writing the error log
4. An error occurs while reading or writing the master function enabling data or the master scan list
5. An error occurs while reading or writing the slave function enabling data or the slave scan list
6. An error occurs while reading or writing the message monitoring timer
7. An error occurs while reading or writing the communications cycle time set value
8. An error occurs while reading the identity information during Identity object server processing

Note This error does occur for checksum errors while reading data.

DeviceNet Unit Response

Registers an error record with error code 0602 in the RAM error log area.

For error 1:
Normal operation continues

For error 2 or 3:
Remaining writes to EEPROM are all ignored. Other than that, normal operation continues. (Error records continue to be written to RAM.)

For error 4:
The master remote I/O communications are stopped. Other operations continue.

For error 5:
The slave scanning is stopped and other operations continue.

For error 6:
The default values are used for the message monitoring timer and operation continues.

For error 7:
The communications cycle time is set automatically and operation continues.

For error 8:
Operation continues.

Flags Allocated for C200H DeviceNet Master Unit (CIO n+24)

Bit 14 (Error Flag) and bit 00 (the Incorrect Switch Settings/EEPROM Error Flag) will be ON.

CIO Area Flags Allocated to DeviceNet Unit

Bits 00 and 04 of n+10 (the Unit Error Flag and Unit Memory Error Flag) will be ON.

Correction

Replace the Unit if the error recurs.

CPU Unit Exchange Errors

Unit Number duplication

7-segment	MS indicator	NS indicator	Error log (Hex)
H1	Red (flashing)	OFF	---

Likely Cause

The unit number is duplicated on another Unit.

DeviceNet Unit Response

Stops operation.

Correction

Set the unit numbers correctly and restart the DeviceNet Units.

CPU Unit Faulty (H2)

7-segment	MS indicator	NS indicator	Error log (Hex)
H2	Red (flashing)	OFF	---

DeviceNet Unit Response

Stops operation.

Correction

Replace the CPU Unit if the error recurs when the CPU Unit is restarted.

DeviceNet Unit Faulty

7-segment	MS indicator	NS indicator	Error log (Hex)
H3	Red (lit)	OFF	---

DeviceNet Unit Response

Stops operation.

Correction

Replace the DeviceNet Unit if the same error recurs when the Unit is mounted to another CPU Unit.

Node Address Setting Error

7-segment	MS indicator	NS indicator	Error log (Hex)
H4	Red (flashing)	OFF	---

Likely Cause

The node address set on the rotary switches is out-of-range (64 or higher.)

DeviceNet Unit Response

Stops operation.

Correction

Set the node address correctly and restart the DeviceNet Units.

Communications Speed Setting Error

7-segment	MS indicator	NS indicator	Error log (Hex)
H5	Red (flashing)	OFF	---

Likely Cause

The communications speed is set incorrectly.

DeviceNet Unit Response

Stops operation.

Correction

Set the communications speed correctly and restart the DeviceNet Units.

CPU Unit Faulty (H6)

7-segment	MS indicator	NS indicator	Error log (Hex)
H6	Red (flashing)	OFF	000F

DeviceNet Unit Response

Records the error in the error log. (The time information is set to all zeroes.)
Stops operation.

Correction

Replace the CPU Unit if the error recurs when the CPU Unit is restarted.

I/O Table Not Registered

7-segment	MS indicator	NS indicator	Error log (Hex)
H7	Red (flashing)	OFF	0006

Likely Cause

The CPU Unit's I/O table is not registered.

DeviceNet Unit Response

Records the error in the error log.
Stops operation.

Correction

Create the I/O table.

Simple Backup Function Restore Error

7-segment	MS indicator	NS indicator	Error log (Hex)
H8	Red (flashing)	---	---

Likely Cause

Restoring data from the Memory Card failed for the simple backup function.

DeviceNet Unit Response

The data in the Memory Card is not restored, and the settings in the Unit remain as they were before the simple backup operation was performed.

Flags Allocated for C200H DeviceNet Master Unit (CIO n+24)

CIO Area Flags Allocated to DeviceNet Unit

Correction

The data on the Memory Card may not be correct. Make sure that the backup operation ends normally before performing the restore operation.

CPU Unit Memory Faulty

7-segment	MS indicator	NS indicator	Error log (Hex)
HA	Red (flashing)	---	0012

Likely Cause

A parity error occurred while reading the routing table.

DeviceNet Unit Response

Records the error in the error log and continues processing
The routing table is treated as missing.

Flags Allocated for C200H DeviceNet Master Unit (CIO n+24)

Bit 14 (Error Flag) and bit 03 (the Structure Error Flag) will be ON.

CIO Area Flags Allocated to DeviceNet Unit

Bits 00 and 12 of n+10 (the Unit Error Flag and Routing Table Error Flag) will be ON.

Correction

Register the routing table in the CPU Unit again and restart the CPU Unit. Replace the CPU Unit if the error recurs.

CPU Unit Faulty (Hb)

7-segment	MS indicator	NS indicator	Error log (Hex)
Hb	Red (flashing)	---	0011

Likely Cause

A timeout occurred while reading the routing table.

DeviceNet Unit Response

Continues processing but data exchange with the CPU Unit is stopped.
The routing table is treated as missing.
Records the error in the error log.

Flags Allocated for C200H DeviceNet Master Unit (CIO n+24)

Bit 14 (Error Flag) and bit 03 (the Structure Error Flag) will be ON.

CIO Area Flags Allocated to DeviceNet Unit

Bits 00 and 12 of n+10 (the Unit Error Flag and Routing Table Error Flag) will be ON.

Correction

Register the routing table in the CPU Unit again and restart the CPU Unit. Replace the CPU Unit if the error recurs.

Routing Table Logic Error

7-segment	MS indicator	NS indicator	Error log (Hex)
HC	Red (flashing)	---	021A

Likely Cause

There is an error in the contents of the routing table.

DeviceNet Unit Response

Records the error in the error log.
The routing table is treated as missing and processing continues.

Flags Allocated for C200H DeviceNet Master Unit (CIO n+24)

Bit 14 (Error Flag) and bit 03 (the Structure Error Flag) will be ON.

CIO Area Flags Allocated to DeviceNet Unit

Bits 00 and 12 of n+10 (the Unit Error Flag and Routing Table Error Flag) will be ON.

Correction

Refer to *1-6-3 Creating Routing Tables*. Set the routing table in the CPU Unit correctly and restart the DeviceNet Units.

I/O Refresh Error

7-segment	MS indicator	NS indicator	Error log (Hex)
Hd	Red (flashing)	---	0347

Likely Cause

The I/O areas set in the master scan list or slave scan list do not exist in the CPU Unit. This error can occur when the Unit is mounted to a different CPU Unit with a different number of EM banks or EM that has been converted to file memory.

Note This error may occur during remote I/O communications, too.

DeviceNet Unit Response

Records the error in the error log.
Stops remote I/O communications for the function (master or slave) using the non-existent area.
There is a possibility that this error will occur again. If it does occur again, restart remote I/O communications to return the system to normal operation.

Flags Allocated for C200H DeviceNet Master Unit (CIO n+24)

Bit 14 (Error Flag) and bit 03 (the Structure Error Flag) will be ON.

CIO Area Flags Allocated to DeviceNet Unit

Bit 00 of n+10 (Unit Error Flag) will be ON together with one of the following combinations:

- Bit 05 of n+12 (the Master I/O Refresh Error Flag) and bit 01 of n+10 (the Master Function Error Flag) ON.
- Bit 05 of n+14 (Remote I/O Refresh Error Flag) and bit 03 of n+10 (the Slave Error Flag) ON.

Correction

Check the master scan list and slave scan list and reset with a correct allocation.

CPU Unit Service Monitoring Error

7-segment	MS indicator	NS indicator	Error log (Hex)
HE	Red (flashing)	---	0002

Likely Cause

Servicing from the CPU Unit is not at fixed intervals. Servicing is normally monitored at 11 s.

DeviceNet Unit Response

- Records the error in the error log.
- Stops master and slave remote I/O communications.
  Performs the following processing if it receives FINS frames that must be passed along to the CPU Unit:
  - Returns an error response (0302 Hex) to commands requiring a response.
  - Discards other frames and stores an error record (010B Hex) in the error log.

  Note Remote I/O communications will not restart automatically for this error. First confirm that the error has been eliminated and then perform the procedure to start remote I/O communications.

Flags Allocated for C200H DeviceNet Master Unit (CIO n+24)

There is no status notification because communications with the CPU Unit are disabled.

CIO Area Flags Allocated to DeviceNet Unit

There is no status notification because communications with the CPU Unit are disabled.

Correction

Inspect the CPU Unit's operating environment.

CPU Unit Watchdog Timer Error

7-segment	MS indicator	NS indicator	Error log (Hex)
HF	Red (flashing)	---	0001

Likely Cause

An error occurred in the CPU Unit.

Note The CPU Unit's watchdog timer error can occur during initialization.

DeviceNet Unit Response

- Records the error in the error log.
- Stops master and slave remote I/O communications.
  Performs the following processing if it receives FINS frames that must be passed along to the CPU Unit:
  - Returns an error response (0302 Hex) to commands requiring a response.
  - Discards other frames and stores an error record (010B Hex) in the error log.

Flags Allocated for C200H DeviceNet Master Unit (CIO n+24)

There is no status notification because communications with the CPU Unit are disabled.

CIO Area Flags Allocated to DeviceNet Unit

There is no status notification because communications with the CPU Unit are disabled.

Correction

Replace the CPU Unit.

CPU Unit Fatal Error

7-segment	MS indicator	NS indicator	Error log (Hex)
---	---	---	---

DeviceNet Unit Response

Output data is set to 0. (With the master, these are output bits. With the slave, these are input bits to the other master.)

Output OFF Error

7-segment	MS indicator	NS indicator	Error log (Hex)
---	---	---	---

Likely Cause

The Output OFF Bit (A50015) was turned ON in the CPU Unit.

DeviceNet Unit Response

Output data is set to 0. (With the master, these are output bits. With the slave, these are input bits to the other master.)

Slave Errors

Remote I/O Communications Error

7-segment	MS indicator	NS indicator	Error log (Hex)
L9	---	Red (flashing)	0345

Likely Cause

A timeout occurred during remote I/O communications using the slave function.

DeviceNet Unit Response

Records the error in the error log.
If slave has outputs, the status of those outputs is determined by the hold/clear outputs setting for communications errors.

CIO Area Flags Allocated to DeviceNet Unit

Bits 00 and 03 of n+10 (the Unit Error Flag and Slave Error Flag) and bits 02 and 03 of n+14 (the Remote I/O Communications Error Flag for OUT1/IN1 and Remote I/O Communications Error Flag for OUT2/IN2) will be ON.

Correction

Check the following:

- Matching master and slave baud rates
- Proper cable lengths (trunk and branch lines)
- Broken or loose cables
- Installation of terminators at both ends of the trunk line
- Excessive noise

Unit Errors

Special Unit Error

7-segment	MS indicator	NS indicator	Error log (Hex)
OFF	Red (lit)	OFF	0601

DeviceNet Unit Response

Records the error in the error log.
Stops the Unit.

Correction

Restart the CPU Unit. Replace the DeviceNet Unit if the error recurs.

9-2 Error Log Functions

Errors detected by the DeviceNet Unit are stored in the error log along with the date and time of their occurrence. The error log can be read, cleared, and monitored using FINS commands or a Configurator.

9-2-1 Error Log Table

Error Log Table

Each time an error occurs, one record is stored in the error log table that is stored in RAM in the DeviceNet Unit. The table can store up to 96 records for unit version 1.1 or later, and up to 64 records for earlier versions. If another error occurs when the table is full, the oldest record will be erased and a new record will be stored.

The error log table records the following information.

- Error code
- Detail code
- Time of occurrence (The CPU Unit's time is used for the time stamp.)

Error Log Storage Area

When an error is detected, information on the error and the time stamp are stored in the Unit's internal RAM as an error log record. Serious errors are recorded in EEPROM as well as RAM. The error log records in EEPROM are

retained even when the Unit's power is turned OFF or the Unit is restarted. The error log records in EEPROM are copied to RAM when the DeviceNet Unit is turned ON.

When the error log is read with a FINS command or from the Configurator, only the error log records in RAM are read. When the error log is cleared with a FINS command or from the Configurator, the error log records in RAM and EEPROM are erased.

Note Refer to *9-2-2 Error Codes and Detail Codes* for a table listing the error codes.

Reading and Clearing the Error Log

The error log table can be read or cleared by sending a FINS command to the DeviceNet Unit. Use the DeviceNet Unit's unit address as the FINS command's destination unit address. (The unit address is the unit number+10 Hex.)

Refer to the *SYSMAC CS/CJ Series Communication Commands Reference Manual* (W342) for details on using the FINS commands. Refer to the *Appendix E FINS Commands and Responses for DeviceNet Units* for details on FINS commands addressed to the DeviceNet Unit.

When using the Configurator, the error log can be monitored with the master error history read operation. With the Configurator, the error log can only be monitored and the data cannot be saved.

Time Information

The CPU Unit's time information is used for the time stamps in the DeviceNet Unit's error log records. If the time information cannot be read from the CPU Unit, the time stamp will contain all zeroes.

The DeviceNet Unit's time stamps will not be correct or consistent unless the time has been correctly in the CPU Unit. Moreover, if the battery is replaced in a CS/CJ-series CPU Unit, the time must be set again the next time that power is turned ON.

9-2-2 Error Codes and Detail Codes

Error code (Hex)	Error	Detail code		Record stored in EEPROM
		First byte	Second byte	
0001	CPU Unit watchdog timer error	00 Hex	00 Hex	Yes
0002	CPU Unit service monitoring error (The servicing time from the CPU Unit is not fixed.)	Monitoring time (ms)		Yes
0006	Other CPU error	Bit 14 ON: Duplicate unit number setting Bit 11 ON: Unit not in registered I/O table Other bits: Reserved for system		Yes
000F	CPU Unit initialization error	00 Hex	00 Hex	Yes
0011	Event timeout	MRC	SRC	Yes
0012	CPU Unit memory error	01 Hex: Read error 02 Hex: Write error	03 Hex: Routing table 04 Hex: CPU Bus Unit settings error 05 Hex: Special Unit CIO or DM allocation	Yes

Error code (Hex)	Error	Detail code		Record stored in EEPROM
		First byte	Second byte	
0101	Transmission failed because the local node is not participating in the network.	FINS message communications command: Bit 15: OFF Bits 14 to 8: SNA Bits 7 to 0: SA1 FINS message communications response: Bit 15: ON Bits 14 to 8: DNA Bits 7 to 0: DA1 Explicit message communications command: Bit 15: OFF Bits 14 to 8: 0 Bit 7: ON Bits 6 to 0: Node address of command source Explicit message communications response: Bit 15: ON Bits 14 to 8: 0 Bit 7: ON Bits 6 to 0: Node address of command source		No
0105	Transmission failed because of a node address setting error.			
0106	Transmission failed because of a node address duplication error.			
0107	Transmission failed because the other node is not participating in the network.			
0108	Transmission failed because there is no Unit with the specified unit number.			
0109	Transmission failed because the other node is busy.			
010B	Transmission failed because of a CPU Unit error. Frame discarded due to one of the following: • A cyclic service monitoring timeout occurred. • A CPU Unit watchdog timer error occurred. • Another CPU Unit error occurred.			
010D	Transmission failed because the destination address is not registered in the routing table.			
010E	Transmission failed because the routing table has not been registered.			
010F	Transmission failed because of a routing table error.			
0110	Transmission failed because of too many repetitions.			
0111	Transmission failed because the command exceeded the max. command length.			
0112	Transmission failed because of a header error.			
0117	Packet discarded because the internal reception buffer is full.			
0118	Illegal packet discarded.			
0120	Unexpected routing error			
0123	Packet discarded because the internal transmission buffer is full.			
0124	Routing failed because maximum frame length was exceeded.			
0125	Packet discarded because of response timeout.			
021A	Setting table logic error	00 Hex	03 Hex: Routing table 0A Hex: Master scan list 0B Hex: Slave scan list 0C Hex: Message monitoring timer list 0D Hex: Scan time	Yes
0211	Node address duplication (cause)	00 Hex	Local node address	No
0300	Packet discarded because of parameter error.	Same as the code (such as 0101 Hex) in the discarded FINS/explicit message packet.		No
0340	Bus Off detected	00 Hex	00 Hex	No
0341	Network power supply error	00 Hex	00 Hex	No
0342	Transmission timeout	00 Hex	00 Hex	No

Error code (Hex)	Error	Detail code		Record stored in EEPROM
		First byte	Second byte	
0343	Structure error	01 Hex: I/O area duplication 02 Hex: I/O area range exceeded 03 Hex: Unsupported slave	Slave's node address	No
0344	Verification error	01 Hex: Non-existent slave 02 Hex: Illegal header 03 Hex: Illegal device type 04 Hex: Illegal product code 05 Hex: Unsupported connection 06 Hex: I/O size mismatch 07 Hex: Illegal connection path	Slave's node address	No
0345	Remote I/O communications error	01 Hex: Master 02 Hex: Slave	Master: Slave's node address Slave: Master's node address	No
0346	Remote I/O communications stopped because of a remote I/O communications error.	01 Hex: Remote I/O communications error 02 Hex: Network power supply error 03 Hex: Transmission timeout	Remote I/O comm. error: Slave's node address Power supply error: Local (master's) node address Transmission timeout: Local (master's) node address	No
0347	I/O refreshing error	01 Hex: Master 02 Hex: Slave	00 Hex	No
0348	Message discarded because a new request was received.	Same as the code (such as 0101 Hex) in the discarded FINS/explicit message packet.		No
0601	Special Unit error	Uncertain contents		Yes
0602	Special Unit memory error	01 Hex: Read error 02 Hex: Write error	06 Hex: Error log 09 Hex: Identity data 0A Hex: Master scan list 0B Hex: Slave scan list 0C Hex: Message monitoring timer list 0D Hex: Communications cycle time setting	Yes (See note.)

Note The error information is not written to EEPROM when a memory error occurs in the error log area (EEPROM).

9-3 Troubleshooting

9-3-1 CPU Unit's ERR/ALM Indicator Lit or Flashing

Use the following table to troubleshoot the network when the DeviceNet Unit is mounted and the CPU Unit's ERR/ALM indicator is lit or flashing.

Error	Probable cause
An I/O verification error occurred.	• Make sure that the Unit is connected properly. • Check the I/O table with the I/O Table Verification operation and correct it if necessary. After correcting it, perform the I/O Table Create operation.
A CPU Bus Unit setting error occurred.	• The CPU Bus Unit model registered in the I/O table does not match the model of CPU Bus Unit actually mounted. Check the I/O table with the I/O Table Verification operation and correct it if necessary. • After correcting the I/O table, perform the I/O Table Create operation.
A CPU Bus error occurred.	• Make sure that the Unit is connected properly. • Restart the Unit. Replace the Unit if it doesn't restart.
An I/O Bus error occurred.	• Make sure that the Unit is connected properly. • Restart the Unit. Replace the Unit if it doesn't restart.

Note Refer to the *CS1 Series CPU Unit Operation Manual* (W339) or the *CJ Series CPU Unit Operation Manual* (W393) for more details on these errors.

9-3-2 Remote I/O Communications Disabled

Use the following table to troubleshoot the network when remote I/O data communications won't start. (The I/O Data Communications Flag remains OFF in Master Status 1.)

Error	Probable cause
All of the DeviceNet Unit's indicators are OFF.	• Check whether power is being supplied to the PLC. • Check whether the DeviceNet Unit is mounted in the Backplane correctly. • When a watchdog timer (WDT) error has occurred in the PLC, follow the procedures described in the PLC's manual to correct the problem. • All of a CS1W-DRM21(-V1) or CJ1W-DRM21 Unit's indicators will be OFF when a CPU Bus Unit error has occurred. Check for a CPU Bus Unit error. • Restart the Unit. Replace the Unit if it doesn't restart.
The DeviceNet Unit's MS indicator is ON and green, but the NS indicator remains OFF. (The NS indicator normally goes ON about 2 s after the MS indicator.)	• If the DeviceNet Unit's 7-segment display is displaying an error code, refer to the tables in *9-1 Troubleshooting with the DeviceNet Unit Indicators*. • Make sure that the master's unit number setting is correct. • Make sure that the unit number is not duplicated on another Special Unit. • Check the I/O table with the I/O Table Verification operation and correct it if necessary. After correcting it, perform the I/O Table Create operation. Restart the Unit. Replace the Unit if it doesn't restart.

Error	Probable cause
The DeviceNet Unit's MS indicator is ON and green, but the NS indicator continues to flash green. (The NS indicator normally goes ON 2 s after the MS indicator.)	• If the DeviceNet Unit's 7-segment display is displaying an error code, refer to the tables in *9-1 Troubleshooting with the DeviceNet Unit Indicators*. • Restart the Unit. Replace the Unit if it doesn't restart.
The DeviceNet Unit's MS and NS indicators are ON and green, but the 7-segment display continues to flash the master's node address. (The node address normally stops flashing within 8 s after the NS lights.)	• Check that the DeviceNet Unit's baud rate matches the baud rates set on all of the slaves. If they don't match, set all of the baud rates to the same value. • Make sure that there are121-Ω terminators connected at both ends of the trunk line. Connect 121-Ω terminators if the wrong resistance is being used. • Check whether all of the slaves' settings are correct. • Check whether the communications cables are wired correctly. • Check whether the power supply cables and power supply are wired and set correctly. • Check for broken wires in the communications and power supply cables attached to the connectors. • Check whether the slaves are operating properly. When an OMRON slave is being used, refer to the *DeviceNet Slaves Operation Manual* (W347). • If another company's slave is being used, refer to that slave's user's manual.

9-3-3 I/O Link Problems

Use the following table to troubleshoot I/O Link problems.

Error	Probable cause
The I/O isn't simultaneous.	Observe the following precautions when writing application programs: • The simultaneity of node-units of data is ensured between the PLC and DeviceNet Unit. • In OMRON slaves, the simultaneity of word-units of data is ensured. • If another company's slave is being used, refer to that slave's user's manual for details.
At startup, OFF outputs are output from the slaves.	When the master is operating in scan list enabled mode and the PLC is set to maintain the status of I/O area bits, those held output points will be output from the output slaves at startup. Be sure to perform the Create Scan List operation and operate the master with the scan list enabled. Refer to the *CS1 Series CPU Unit Operation Manual* (W339) or the *CJ Series CPU Unit Operation Manual* (W393) for details on maintaining I/O area data with the IOM Hold Bit.

9-3-4 Communications Error Operation Settings

Use the following table to correct problems with the DIP switch setting for continuing/stopping communications for errors.

Error	Probable cause
Communications are stopped even though there is no communications error.	When pin 3 on the DIP switch is ON, communications will be stopped if a communications error, transmission timeout, or network power supply error occurs. While communications are stopped, the 7-segment displays will alternately display error code A0 and the error code of the communications error that caused the stoppage. After a network power supply error or transmission timeout is corrected, the indicators will show just the communications stoppage code (A0).
Communications are stopped by the DIP switch setting, but don't resume after toggling the Clear Communications Error Stoppage Bit.	• When communications can't be restarted with slaves that were communicating normally before the stoppage, stop the communications again. Check that the slave has started up and perform the "clear communications error stoppage" operation. • It may be necessary to perform the operation twice if the network contains another company's slave that take a long time to join the network.

9-3-5 Scan List Problems

Use the following table to troubleshoot scan list problems.

Error	Probable cause
A scan list couldn't be created by the "create scan list" operation. A scan list couldn't be cleared by the "clear scan list" operation.	Neither the create scan list nor clear scan list operations can be performed until the I/O Data Communications flag goes ON. (The I/O Data Communications flag will be OFF for a short time after the power is first turned ON and after the scan list clear operation is executed.) Make sure that the I/O Data Communications flag is ON before attempting to execute the create scan list or clear scan list operations.
The "create scan list" or "clear scan list" operation was executed, but the master's 7-segment displays still display "- -". (The "- -" display usually lasts for 1 s after the "create scan list" operation or 0.1 s after the "clear scan list" operation.)	Restart the DeviceNet Unit, execute the clear scan list operation, and then the create scan list operation if necessary. Replace the DeviceNet Unit if this doesn't correct the problem.

9-4 Maintenance and Replacement

This section describes the routine cleaning and inspection recommended as regular maintenance as well as the Unit replacement procedure required if a DeviceNet Unit fails.

9-4-1 Cleaning

Clean the DeviceNet Units regularly as described below in order to keep the network in its optimal operating condition.

- Wipe the Unit daily with a dry, soft cloth.
- When a spot can't be removed with a dry cloth, dampen the cloth with a neutral cleanser (2% solution), wring out the cloth, and wipe the Unit.
- A smudge may remain on the Unit from gum, vinyl, or tape that was left on for a long time. Remove the smudge when cleaning.

⚠ **Caution** Never use volatile solvents such as paint thinner, benzene, or chemical wipes. These substances could damage the surface of the Unit.

9-4-2 Inspection

Be sure to inspect the system periodically to keep it in its optimal operating condition. In general, inspect the system once every 6 to 12 months, but inspect more frequently if the system is used with high temperature or humidity or under dirty/dusty conditions.

Inspection Equipment

Prepare the following equipment before inspecting the system.

Required Equipment

Have a standard and Phillips-head screwdriver, multimeter, alcohol, and a clean cloth.

Equipment Required Occasionally

Depending on the system conditions, a synchroscope, oscilloscope, thermometer, or hygrometer (to measure humidity) might be needed.

Inspection Procedure

Check the items in the following table and correct any items that are below standard.

Item		Standard	Equipment
Environmental conditions	Ambient and cabinet temperature	0°C to 55°C	Thermometer
	Ambient and cabinet humidity (with no condensation or icing)	10% to 90%	Hygrometer
	Dust/dirt accumulation	None	---
Installation	Are the Units installed securely?	No looseness	---
	Are the communications connectors fully inserted?	No looseness	---
	Are the external wiring screws tight?	No looseness	---
	Are the connecting cables undamaged?	No damage	---

9-4-3 Replacing Faulty Units

Replace a faulty DeviceNet Unit as soon as possible. Refer to the *DeviceNet Slaves Operation Manual* (W347 or W404) or the *MULTIPLE I/O TERMINALs Operation Manual* (W348) for details on replacing slaves. We recommend having spare Units available to restore network operation as quickly as possible.

Precautions

Observe the following precautions when replacing a faulty Unit.

- After replacement make sure that there are no errors with the new Unit.
- When a Unit is being returned for repair, attach a sheet of paper detailing the problem and return the Unit to your OMRON dealer.
- If there is a faulty contact, try wiping the contact with a clean, lint-free cloth dampened with alcohol.

Note To prevent electric shock when replacing a Unit, be sure to stop communications in the network and turn OFF the power supplies to all of the nodes (master and slaves) before removing the faulty Unit.

Settings after Replacing DeviceNet Units

When the master is being used, the scan list (network file) must be registered after replacing the DeviceNet Unit.

All of the settings data stored in the DeviceNet Unit can be saved to the CPU Unit's Memory Card[1] and later read from the Memory Card[2]. It will be much easier to replace the Unit if you save all of the settings data when the Unit is operating normally.

Note

1. Toggle (OFF to ON) the Unit Setup File Backup Switch (word n+1, bit 15).
2. Toggle (OFF to ON) the Unit Setup File Restore Switch (word n+1, bit 14).
3. The backup file is saved to the CPU Unit's Memory Card with the filename DNnnBKUP.dvf. (The number "nn" is the unit number in 2-digit hexadecimal.)

Default Remote I/O Allocations

Turn ON power to all slaves and then turn ON the Scan List Enable Switch (bit 00). The scan list will be registered.

User-set Remote I/O Allocations

The scan list can be written to the DeviceNet Unit from the CPU Unit's Memory Card or a network file saved on a disk.

Using the Settings Data Stored in the CPU Unit's Memory Card

Use the following procedure to write all of the settings data from the Memory Card to the DeviceNet Unit.

1,2,3...

1. Turn ON power to the PLC.
2. Switch the CPU Unit to PROGRAM mode.
3. Toggle (OFF to ON) the Unit Setup File Restore Bit (word n+1, bit 14).

Using a Network File Stored on a Floppy Disk or Hard Disk

Use the following procedure to write the settings to the DeviceNet Unit from a network file saved on a disk.

1,2,3...

1. Turn ON power to the DeviceNet Unit and the Configurator.
2. Place the Configurator online and read the network file that was previously saved.

3. Use the Edit Device Parameters operation, specify the DeviceNet Unit that has been replaced, and write the settings from the network file to the DeviceNet Unit.

Creating a New Network File

Use the following procedure to write the settings to the DeviceNet Unit from a network file saved on a disk.

1,2,3...

1. Turn ON power to the DeviceNet Unit, slaves, and the Configurator.
2. Place the Configurator online and display the Device List.
3. Specify the DeviceNet Unit that has been replaced, and use the Edit Device Parameters operation to register slaves and allocate I/O.
4. Write the settings to the devices.

Note

1. When using user-set remote I/O allocations, always save the network file to a floppy disk or hard disk to restore operation quickly if the DeviceNet Unit needs to be replaced.
2. When the CPU Unit is replaced, be sure that all data in the DM Area, HR Area, and other memory areas is transferred to the new CPU Unit before starting operation.

Appendix A

Allocation Differences from C200H DeviceNet Master Units

The following table shows the CS1W-DRM21(-V1)/CJ1W-DRM21 DeviceNet Unit allocation areas that correspond to the C200HW-DRM21-V1 DeviceNet Master Unit allocation areas.

Note The following table does not include the allocation areas that exist only in CS/CJ-series DeviceNet Units.

Refer to this table when using ladder programs in the CS1W-DRM21(-V1)/CJ1W-DRM21 that have been used in C200HW-DRM21-V1 DeviceNet Master Units and make adjustments as required.

Use the CX-Programmer replacement operation to change ladder program addresses. When using a CX-Programmer Ver. 1.2 or earlier, use the global replace utility function to globally replace addresses.

Software Switches

Unit No.: Set on rotary switches on front panel (0 to 15).

Name	C200H DeviceNet Master Unit			CS/CJ-series DeviceNet Unit		Contents for CS/CJ-series DeviceNet Unit	Differences from C200H-series DeviceNet Master Unit
	Word address		Bit	CS/CJ-series word address	Bit		
	CS/CJ Series	C200HX/HG/HE, C200HS					
Scan List Enable Switch	IR 2000 + (10 × unit No.)	Unit No. 0 to 9: IR 100 +(10 × unit No.) Unit No. A to F: IR 400 +(10 × unit No. – 10)	00	CIO 1500 + (25 × unit No.)	00	OFF → ON Registers to scan list the slaves recognized during operation in scan list disabled mode and starts operation in scan list enabled mode (PLC Unit in PROGRAM mode).	No differences. Different usage: Switch returns to OFF when processing completed.
Scan List Clear Switch			01		01	OFF → ON Disables scan list registration and starts operation in disabled mode (PLC Unit in PROGRAM mode).	No differences. Different usage: Unit switch returns to OFF when processing completed.
Remote I/O Communications Start Switch			02		02	OFF → ON Restarts remote I/O communications stopped with communications error based on settings.	Includes bit 03 remote I/O communications start switch functions in CS/CJ-series DeviceNet Unit. Different usage: Unit switch returns to OFF when processing completed.
Remote I/O Communications Start Switch			03		03	OFF → ON Starts communications	Includes bit 02 communications error stop clear switch functions in CS/CJ-series DeviceNet Unit. Different usage: Unit switch returns to OFF when processing completed.
Remote I/O Communications Stop Switch			04		04	OFF → ON Stops remote I/O communications	Different usage: Unit switch returns to OFF when processing completed.

Status Areas

Master Status Area 1

An area with the exact same bit configuration as Master Status area 1 used for C200H DeviceNet Master Units, was set up. This area is called the Master Replacement Status 1.

- The following table compares the C200H DeviceNet Master Unit Master Status Area 1 and the CS/CJ-series DeviceNet Unit Master Replacement Status 1.

Names for C200H DeviceNet Master Unit Master Status Area 1	C200H DeviceNet Master Unit			Names for CS/CJ-series DeviceNet Unit Master Replacement Status 1	CS/CJ-series DeviceNet Unit		Details and CS1W-DRM21(-V1)/ CJ1W-DRM21 status
	Word address		Bit		CS/CJ-series word address	Bit	
	CS/CJ Series	C200HX/ HG/ HE, C200HS					
Switch Setting Error or EEPROM Error Flag	IR 2001+ (10 × unit No.)	Unit No. 0 to 9: IR 101+(10 × unit No.) Unit No. A to F: IR 401+(10 × unit No. – 10)	00	Unit Error Flag	CIO 1524+ (25 × unit No.)	00	This is the same as a Unit memory error (word n+10, bit 04). **Note** This bit is also used for incorrect switch settings for the C200HW-DRM21-V1. The Unit will not start if the switch settings are incorrect.
Node Address Duplicated/ Bus Off Flag			01	Node Address Duplicated/ Bus Off Flag		01	This bit turns ON if any one of the following flags turns ON: • Node address duplicated (word n+10, bit 06) • Bus Off (word n+10, bit 05)
Reserved for system use			02	Reserved for system use		02	Reserved by system
Configuration Error Flag			03	Configuration Error Flag		03	This bit turns ON if any of the following flags turn ON: • Routing table error (word n+10, bit 12) • Invalid message timer list (word n+10, bit 13) • Invalid Scan List Data (word n+12, bit 04) • Remote I/O refresh error (word n+12, bit 05) **Note** The C200HW-DRM21-V1 does not support slave communications. Scan list data errors for slave communications are not relevant.
Structure Error Flag			04	Structure Error Flag		04	This is the same as the Structure Error Flag in word n+12, bit 01.
Send Error Flag			05	Send Error Flag		05	This bit turns ON if any one of the following bits turns ON: • Network power error (word n+10, bit 07) • Send timeout (word n+10, bit 08)

Names for C200H DeviceNet Master Unit Master Status Area 1	C200H DeviceNet Master Unit			Names for CS/CJ-series DeviceNet Unit Master Replacement Status 1	CS/CJ-series DeviceNet Unit		Details and CS1W-DRM21(-V1)/ CJ1W-DRM21 status
	Word address		Bit		CS/CJ-series word address	Bit	
	CS/CJ Series	C200HX/ HG/ HE, C200HS					
Communications Error Flag	IR 2001+ (10 × unit No.)	Unit No. 0 to 9: IR 101+(10 × unit No.) Unit No. A to F: IR 401+(10 × unit No. – 10)	06	Communications Error Flag	CIO 1524+ (25 × unit No.)	06	This is the same as the Remote I/O Communications Error Flag (word n+12, bit 02).
Verification Error Flag			07	Verification error		07	This is the same as the Verification Error Flag in word n+12, bit 00.
I/O Data Communications Not Running Flag			08	I/O Data Communications Not Running Flag		08	This operates in the reverse way of the Remote I/O Communications Flag (word n+11 bit 01).
Scan List Operation Completed Flag			09	Reserved for system use		09	---
Scan List Operation Error Flag			10	Reserved for system use		10	---
Communications Error Stop Cleared Flag			11	Reserved for system use		11	---
Message Communications Enable Flag			12	Message Communications Permitted Flag		12	The same as the Online Flag in word n+11, bit 00. **Note** When executing message communications instructions (SEND/RECV/CMND) from the ladder program, use an AND of input conditions for the Network Communications Enabled Flag in the CPU Unit (A20200 to A20207) and this bit.
Scan List Disabled Flag			13	Scan List Disabled Flag		13	The same as operation as the Scan List Disabled Flag (word n+11, bit 04).
Error Flag			14	Error Flag		14	This bit turns ON if bit 00, 01 or 03 to 07 in this word (n+24) turns ON.
I/O Data Communications Flag			15	I/O Data Communications Flag		15	The same as I/O Data Communications Flag (word n+12 bit 15).

Master Status Area 2

Name	C200H DeviceNet Master Unit			CS/CJ-series DeviceNet Unit		Contents for CS/CJ-series DeviceNet Unit	Differences from C200H DeviceNet Master Unit
	Word address		Bit	CS/CJ-series word address	Bit		
	CS/CJ Series	C200HX/HG/HE, C200HS					
Error History Flag	D06032+ (2 × unit No.)	DM6032+ (2 × unit No.)	00	CIO 1511 + (25 × unit No.)	15	1: When error history is stored in Master Unit 0: When error history is not stored in Master Unit	No difference.
Master I/O Allocation Status			15	CIO 1513 + (25 × unit No.)	08 to 15	1: When scan list has been created using Configurator and operating in scan list enabled mode (user-set allocations) 0: When operating in scan list disabled mode or when operating in scan list enabled mode based on the scan list registered by software switch settings (fixed allocations)	Shown in 1-byte code for CS1W-DRM21(-V1)/CJ1W-DRM21

Communications Cycle Time Present Value

Name	C200H DeviceNet Master Unit			CS/CJ-series DeviceNet Unit		Contents for CS/CJ-series DeviceNet Unit	C200H DeviceNet Master Unit
	Word address		Bit	CS/CJ-series word address	Bit		
	CS/CJ Series	C200HX/HG/HE, C200HS					
Communications cycle time present value	D06033+ (2 × unit No.)	DM6033+ (2 × unit No.)	00 to 15	m+16	00 to 15	The present value of the communications cycle time is stored in 4-digit BCD. The unit is ms. The digits below decimal place are rounded up.	Stored in hexadecimal.

Registered Slave Table

Name	C200H DeviceNet Master Unit			For CS/CJ-series DeviceNet Unit		C200H DeviceNet Master Unit
	Word address		Bit	CS/CJ-series word address	Bit	
	CS/CJ Series	C200HX/HG/HE, C200HS				
Registered slave table	4 words starting with 2002 + (10 × unit No.)	Unit No. 0 to 9: 4 words starting with IR 102 +(10 × unit No.) Unit No. A to F: 4 words starting with IR 402 +(10 × unit No. – 10)	00 to 15	4 words starting with n+16	00 to 15	No differences.

Normal Slave Table

Name	C200H DeviceNet Master Unit			For CS/CJ-series DeviceNet Units		C200H DeviceNet Master Unit
	Word address		Bit	Word address	Bit	
	CS/CJ Series	C200HX/HG/HE, C200HS		CS/CJ Series		
Normal slave table	4 words starting with CIO 2006 + (10 × unit No.)	Unit No. 0 to 9: 4 words starting with IR 106 +(10 × unit No.) Unit No. A to F: 4 words starting with IR 406 + (10 × unit No. – 10)	00 to 15	4 words starting with n+20	00 to 15	With the C200HW-DRM21-V1, normal slave information is held, and when remote I/O communications are started again, the information is cleared to OFF, even in the following cases: Network power supply error Send timeout Remote I/O communications stopped When remote I/O communications are stopped due to a communications error, only the bits for the slaves that caused the stoppage will turn OFF. Also, the “corresponding Slave remote I/O communications timeout” in the detailed information for that slave (m+37 to m+68 bit 11 or bit 03) will turn ON. The communications timeout bits for all other slaves will remain OFF. For the CS1W-DRM21(-V1) or CJ1W-DRM21, however, all normal slave information will turn OFF when the remote I/O communications are stopped, including for a communications error.

Replacing Ladder Programs from C200HW-DRM21-V1

If ladder programs have already been created for C200H DeviceNet Master Unit (C200HW-DRM21-V1) mounted to CS/CJ-series CPU Units, the ladder programs must be changed when replacing the C200HW-DRM21-V1 with this Unit.

Remote I/O Communications and Status Monitor Ladder Programs

- When using a CX-Programmer Ver. 2.0, use its replacement function to globally replace addresses.
- When using a CX-Programmer Ver. 1.2 or earlier, use the global replace utility function to globally replace addresses.

Replace the addresses as shown in the following table.

Area type		C200HW-DRM21-V1	This Unit (CS1W-DRM21(-V1))	Remarks
First word of IN area in fixed remote I/O allocations		IR 350	Can be allocated to CIO 350 from Configurator or in allocated DM Area words	Completely compatible.
First word of OUT area in fixed remote I/O allocations		Word 50	Can be allocated to CIO 50 from Configurator or in allocated DM Area words	Completely compatible.
Software switches		IR 2000 +10 × unit No.	CIO 1500 +25 × unit No.	Only word address changed.
Communications error stop clear		Bit 02	Bit 02	
Remote I/O communications start		Bit 03	Bit 03	
Remote I/O communications stop		Bit 04	Bit 04	
Master status area 1		IR 2000 +10 × unit No.+ 1	CIO 1500 +25 × unit No.+ 24	Only word address changed.
Master status area 2	Scan list registration by Configurator	D06032+2 × unit No.+1, bit 15	CIO 1500 +25 × unit No.+ 13 **Note** Allocated as status code.	Cannot be accessed from ladder program.
	Error history	D06032+2 × unit No.+1, bit 00	CIO 1500 +25 × unit No.+bit 15 of 11	
First word of registered slave table		IR 2000 +10 × unit No.+2	CIO 1500 +25 × unit No.+16	Only word address changed.
First word of normal slave table		IR 2000 +10 × unit No.+6	CIO 1500 +25 × unit No.+20	Only word address changed.

Message Communications in Ladder Programs

Instructions	C200HW-DRM21-V1	This Unit (CS1W-DRM21(-V1))	Remarks
Message communications instructions	IOWR instructions	CMND instructions (SEND/RECV also possible for FINS data communications)	Change instructions and message data.
Instruction execution conditions	Message Communications Enabled Flag (IR 2000 +10 × unit No.+ 1, bit 12)	AND condition for 1. Message Communications Permitted Flag (CIO 1500 +25 × unit No.+24, bit 12) and 2. Network Communications Enabled Flag (A20200 to A20207: Correspond to ports 0 to 7)	Change execution conditions. **Note** The Message Communications Permitted Flag (CIO 1500 +25 × unit No.+ 24, bit 12) is the same even when online as (CIO 1500 +25 × unit No.+ 11, bit 00)

Note If there is a routing table in the CS/CJ-series CPU Unit, the DeviceNet Unit must be registered in it when replacing the C200HW-DRM21-V1 with the CS1W-DRM21(-V1) or CJ1W-DRM21. If the DeviceNet Unit is not registered, it will result in a routing table error, and the 7-segment display of the DeviceNet Unit will indicate “HC”.

Appendix B
DeviceNet Connections

DeviceNet has several different protocols for remote I/O communications between Master and Slave devices. Connections are units used to monitor those protocols.

There are four kinds of DeviceNet remote I/O communications protocols (connections): Poll, bit–strobe, COS (change of state), and cyclic. CS/CJ-series DeviceNet Units support all four types.

The connection used by the DeviceNet Unit is automatically selected if the Configurator is not used.

If the Configurator is used, the connection can be automatically selected by the DeviceNet Unit or the user can specify the connections for each slave. Up to two connections can be set. COS and cyclic connections cannot be specified at the same time. The characteristics of each connection are outlined in the following table.

Connection	Characteristics	
Poll	Used for basic I/O.	
Bit-strobe	Used for input of 8 bytes or less. Sends broadcasting requests from master and receives input from slaves.	
COS (Change of State)	Communications occur at regular cycles (heartbeat timer) and the connection is determined by the master or slave sending the data. Data can be sent only when required, which reduces the network communications load. This connection can be used to send data to the master or slave if the master or slave data changes. COS connections are given priority over poll and bit-strobe connections, which may result in a longer communications cycle time due to the higher frequency of COS connections used to send data or large amounts of data sent using COS. Therefore, COS connections are effective when changes to data are infrequent (approximately 100 ms min.), or to give higher priority to small amounts of data. For DeviceNet Units, the transmission timing can be decided in the user program. The following points apply for CS/CJ-series DeviceNet Units: If the Master COS Send Switch is turned ON, remote I/O communications output data can be sent every time from the master using COS to the slaves that support COS. If the Slave COS Send Switch is turned ON, remote I/O communications output data can be sent every time from the slave using COS to the master (input data from the perspective of the master). Even if the software switch is not turned ON, the COS communications using regular cycles (heartbeat timer) can be performed simultaneously. **Note** This CS/CJ-series DeviceNet Unit supports COS.	**Note** COS and cyclic connections cannot be used at the same time.
Cyclic	Communications timing is determined by regular cycles (heartbeat timer). Masters and slaves send output or input data in regular cycles. Cyclic connections are have higher priority than poll or bit-strobe connections, which may result in a longer communications cycle time due to large amounts of data sent using cyclic connections. Therefore, cyclic connections are effective when changes to data are infrequent, or the amount of data to be sent is small.	

Note 1. With previous DeviceNet Units (i.e., the C200HW-DRM21-V1 and CVM1-DRM21-V1), bit-strobe connections are used for slaves that have an input capacity of 8 bytes or less and poll connections are used for other slaves. (The DeviceNet Unit automatically selects the connection type.)

2. There can be only one master on each network if COS or cyclic connections are used.

Connections Using Allocations

Allocation method		Contents
Without Configurator	Fixed allocation (scan list disabled or enabled)	Only 1 connection, automatically selected by the DeviceNet Unit. (Either a polling or bit-strobe connection is used.)
	User-set allocations using allocated DM Area word settings	Only 1 connection, automatically selected by the DeviceNet Unit based on the I/O area set in the Master User Allocations Table.
With Configurator	User-set allocations using Configurator	The user can select the connection to be used for each node address with the Configurator e.g., poll could be used for data and COS could be used for status. Automatic selection or user selection can be specified. Two connections can be used simultaneously for one slave (but COS and cyclic cannot be used simultaneously.)

Setting Connection Type

The settings for remote I/O communications connections differ depending on the allocation method, as outlined below.

Fixed Allocation or User-set Allocations Using Allocated DM Area Words

The Master CS/CJ-series DeviceNet Unit automatically selects either poll or bit-strobe, whichever makes the communications cycle time shortest.

User-set allocations Using Configurator

The Master CS/CJ-series DeviceNet Unit can make an automatic selection, the same as above, or the user can select up to two connections for a Slave. The setting method is outlined below.

1. Select the Master Node in the Network Configuration Window in the Configurator.
2. Select ***Device – Parameters – Edit – All Masters*** and select the corresponding Slave. Click the **Detailed Settings** Button.
3. On the Connection Tab Page shown below, select a check box.
   - Automatic selection
   - User selection

Select up to two connections from poll, bit–strobe, COS and cyclic. COS and cyclic connections cannot be used at the same time.

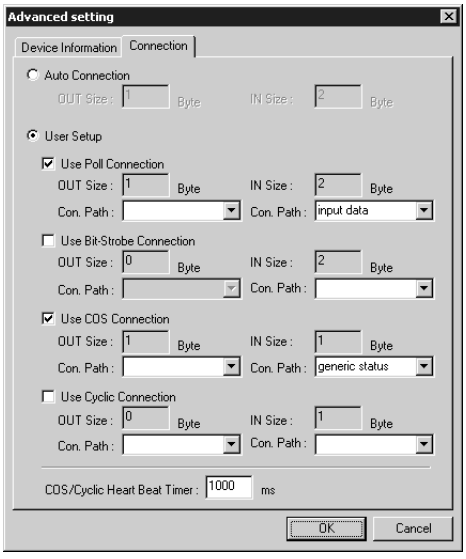

Note 1. Output data using poll connections and output data using COS or cyclic connections are transmitted using the same frame. Therefore set the same output size (bytes) when combining poll and COS or poll and cyclic.

2. The COS/cyclic heartbeat timer is the smallest transmission interval for COS or cyclic connections. It can be set for each corresponding slave.

Refer to *DeviceNet Configurator Operation Manual* (W382) for details on Configurator operation.

Connection Path

Connection path are parameters that specify the type of I/O data in the slaves. Depending on the type of slave, the internal I/O data type may be able to be selected. If it can, the connection path and I/O data type in the slave specified for remote I/O communications.

The connection path settings will differ depending on the allocation method, as outlined below.

Fixed Allocation or User-set Allocations Using DM

Connection path settings cannot be made.

User-set Allocations Using Configurator

The Configurator can be used to set the type of I/O data in the slave, using the connection path. The user can use this method to set the I/O data type in the master and the remote I/O communications slave.

The connection path is saved by the Configurator to the CS/CJ-series DeviceNet Unit scan list and when the remote I/O communications are started, the connection path is set to the slave via the DeviceNet network.

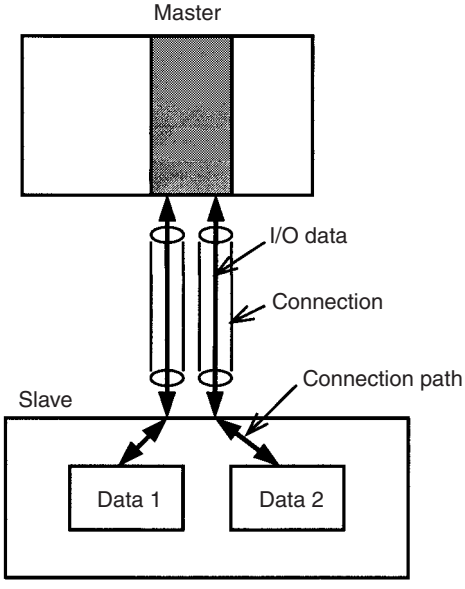

Master COS Send Switch

COS transmission is possible only for User-set allocations using the Configurator.

When required, remote I/O output data can be output from the master to a specified slave.

Output data can be sent at the communications cycle timing to the specified slave by other connections selected automatically or by the user (only when using the Configurator).

In this case, the communications timing is not dependant on the communications cycle time but it is dependant on the CPU Unit cycle time.

Note When a master or slave sending data with COS communications must handle large quantities of data or when data is sent frequently using COS communications, the communications cycle time may actually be longer than when using poll communications. This can have a large impact on the performance of remote I/O communications and delay responses. Therefore, give ample consideration to the system performance when using COS.

DeviceNet Units use the Master COS Send Switch in the allocated CIO Area words to execute COS transmissions from the master to slaves. The procedure is outlined below.

Step 1
Before executing COS transmission, the connection for the destination slave must be set to COS in the master scan list, using the Configurator.

Step 2
If the bit allocated to each node address from n + 2 words to n + 5 words is turned from OFF to ON, the output data is sent to that node address at a timing independent of the communications cycle time.

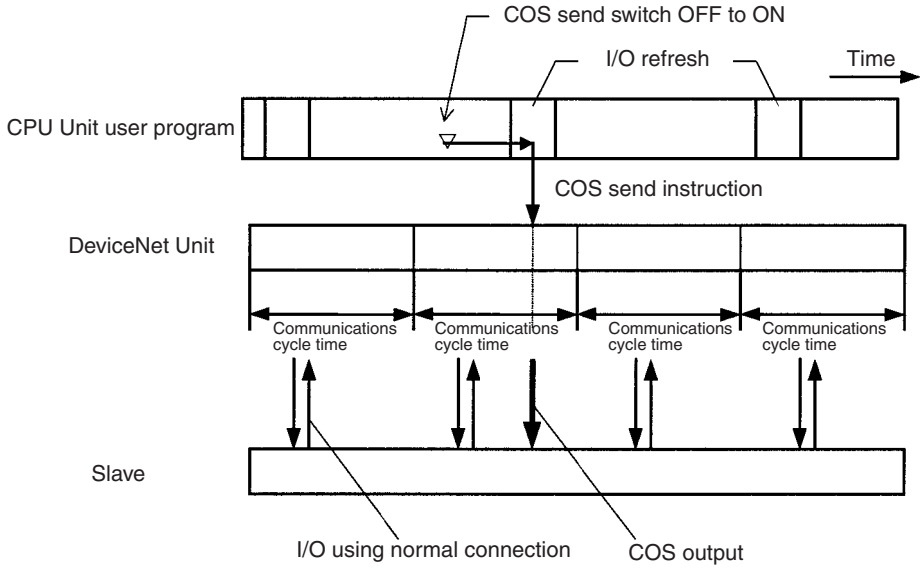

Multiple bits can be turned OFF to ON simultaneously and output data can be sent to multiple node addresses simultaneously.

The following diagram shows the transmission timing. After the COS send instruction has been sent to the DeviceNet (at the I/O refresh timing for the CPU Unit), the COS transmission is executed to each slave immediately after the refresh (remote I/O communications), which each slave is performed during the communications cycle. Therefore, when there are a lot of destination slaves, the COS send timing may be delayed in order of the node addresses.

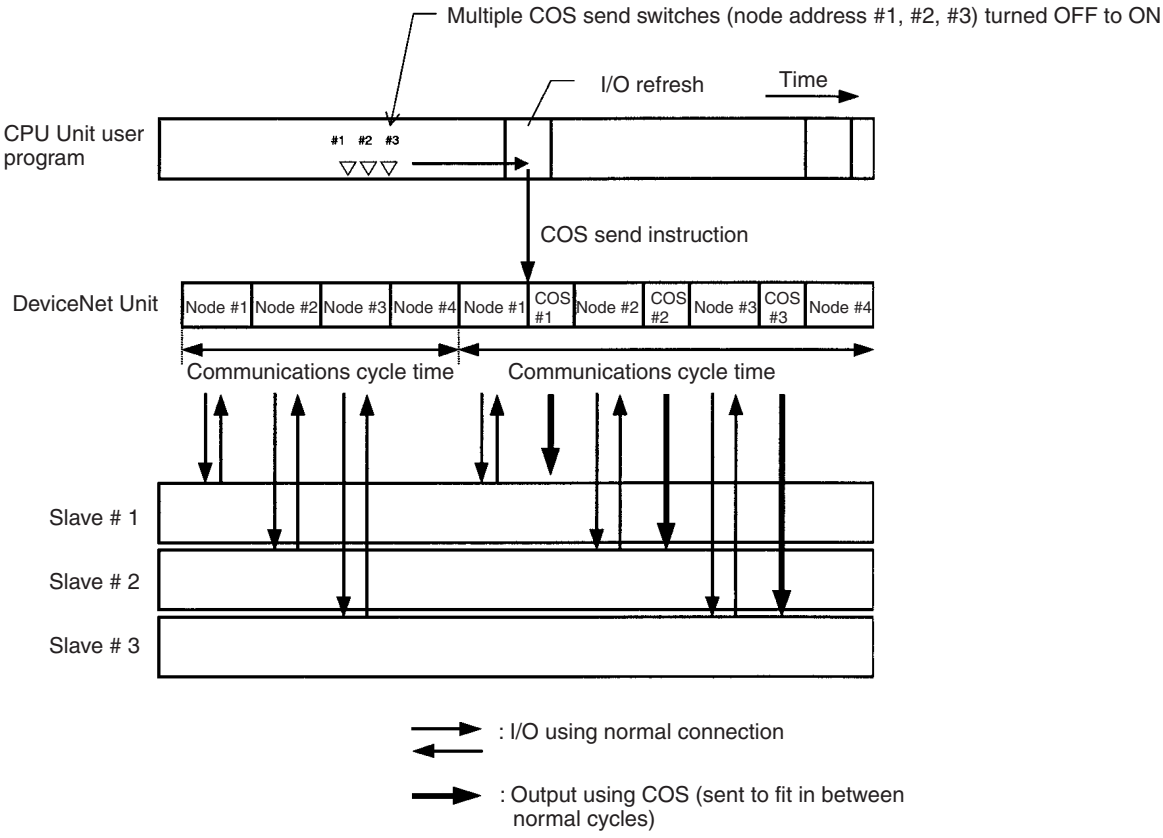

Appendix C
FINS Commands and Responses for DeviceNet Units

List of Command Codes

Command type	Command code	Reference page
RESET	0403	247
CONTROLLER DATA READ	0501	247
CONTROLLER STATUS READ	0601	248
ECHOBACK TEST	0801	249
ERROR LOG READ	2102	250
ERROR LOG CLEAR	2103	251

Refer to *SYSMAC CS/CJ Series Communication Commands Reference Manual* (W342) for details on end codes.

RESET (0403)

Resets (restarts) the DeviceNet Unit.

Command Block

Resets the DeviceNet Unit.

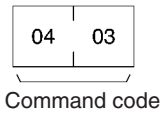

Response Block

There are no responses for this command

End Code

End code (hex)	Contents
1001	The command length exceeds maximum command length.

Explanation

- Resets the DeviceNet Unit.
- A communications error has occurred at the Slave but the Slave will restore after the DeviceNet Unit has started up.
- The remote device communicating the message may have timed out but communications can be performed normally after the DeviceNet Unit has started up.

READ CONTROLLER INFORMATION (0501)

Reads the following DeviceNet Unit information.

- Model
- Version
- Node address

- Baud rate

Command Block

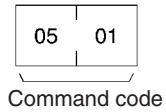

Response Block

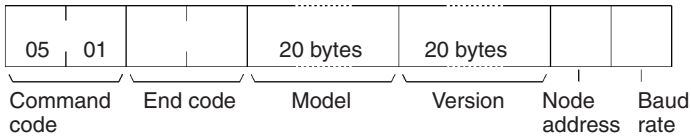

End Codes

End code (hex)	Contents
0000	Normal end
1001	Command length exceeds maximum command length.

Parameter Details

[Model, Version] (Response)
The DeviceNet Unit model and version are returned as outlined below in 20-byte ASCII code. If the data is less than 20 bytes, the remaining bytes will be filled by 20 Hex (space).

- Model:
  CS1W-DRM21□□□□□□□□□□ (□: space)
  Or:
  CJ1W-DRM21□□□□□□□□□□ (□: space)
  Version:
  V1.00V1.02V1.01□□□□□ (□: space)
- Node Address:
  The following DeviceNet Unit node addresses are returned: 00 to 3F hex.
- Baud Rate:
  0 hex: 125 kbps
  1 hex: 250 kbps
  2 hex: 500 kbps

READ CONTROLLER STATUS (0601)

Reads the internal status of the DeviceNet Unit.

Command Block

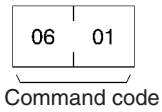

Response Block

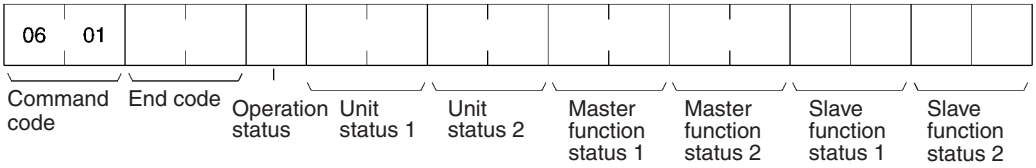

End Codes

End code (hex)	Contents
0000	Normal end
1001	Command length exceeds maximum command length.
2606	Service cannot be executed.

Parameter Details

[Operation status, Units status 1, Unit status 2, Master function status 1, Master function status 2, Slave function status 1, Slave function status 2] (response)

- Operation Status
  Fixed at 01 hex.
- Units status 1, Unit status 2, Master function status 1, Master function status 2, Slave function status 1, Slave function status 2
  The same value as the status in the allocated CIO Area words is returned.

ECHOBACK TEST (0801)

Performs an echo back test (communications test between nodes) between specified nodes.

Command Block

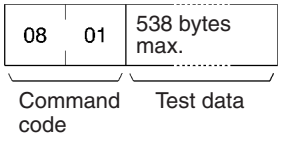

Response Block

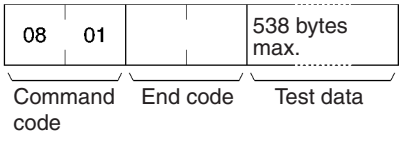

End Codes

End code (hex)	Contents
0000	Normal end
1001	Command length exceeds maximum command length.
1002	The command length is insufficient for the smallest command. There is no test data.

Parameter Details

[Test Data] (Command, Response)

For commands, the data to be sent to the specified node is specified, with a maximum of 538 bytes.

For responses, The test data that was sent by the command is returned.

Explanation

An error has occurred if the test data sent by the command and the tests data returned by the response are different.

READ ERROR HISTORY (2102)

Reads the error history saved in the DeviceNet Unit.

Command Block

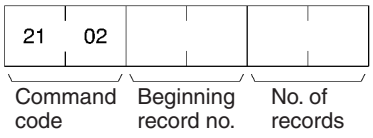

Response Block

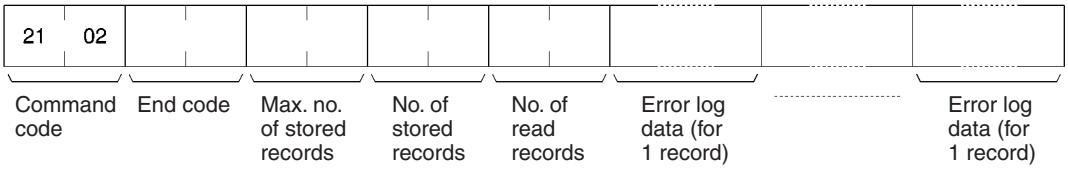

End Codes

End code (hex)	Contents
0000	Normal end
1001	Command length exceeds maximum command length.
1002	The command length is insufficient for the smallest command.
1103	Outside address range error The Read start record No. is larger than the number of records currently stored.
110C	Parameter error No. of read records= 0.

Parameter Details

[Read Start Record No.](Command)

Specifies the record number where the read is to start in 2-byte (4-digit) hexadecimal. The record number is specified from 0000 to 005F hex (0 to 95 decimal), with the first word being 0000 hex. (The range is 0000 to 003F hex (0 to 63 decimal) for unit versions earlier than 1.1.)

[Read Record No.](Command, response)
For commands, specifies the number of records to be read. The specification range is 0001 to 0060 hex (1 to 96 decimal). (The range is 0001 to 0040 hex (1 to 64 decimal) for unit versions earlier than 1.1.)
For responses, the number of records actually read is returned.

[Max. No. of Records] (Response)
The maximum number of errors that can be recorded in DeviceNet Unit error history. Fixed to 0060 hex (96 decimal) for DeviceNet Units. (The value is 0040 hex (64 decimal) for unit versions earlier than 1.1.)

[No. Stored] (Response)
The number of error history records stored at the point when the command was executed. The range is 0000 to 0060 hex (0 to 96 decimal). (The range is 0000 to 0040 hex (0 to 64 decimal) for unit versions earlier than 1.1.)

[Error History Data] (Response)
Returns the error history for the number specified by Read Record No., in order from the Read Start Record No. The total number of Error History Data bytes is 10 × Read Record No.
One record of error history data is structured in 10 bytes as shown in the following diagram.

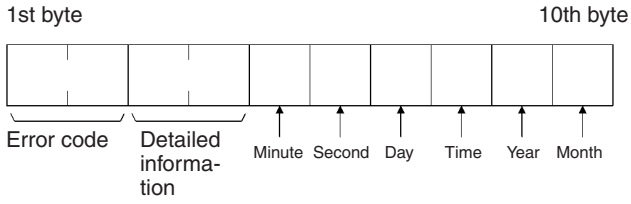

- Error Codes, Detailed Information
  Shows the contents of the error stored in that record. Refer to *9-2 Error Log Functions* for details.
- Minutes, Seconds, Day, Time, Year, Month
  Shows the date and time that the error stored in that record occurred.

Explanation

- Reads the error history data recorded in the DeviceNet Unit from the specified point for the specified number of records.
- Up to 96 records are recorded in the DeviceNet Unit and the oldest data will be the first to be replaced when the maximum is reached. (Up to 64 records are recorded for unit versions earlier than 1.1.)

Important Points

- If there are fewer error history records than the Read Record No., the records up to the last (latest) record stored at the point of command execution and then the processing/communications will end normally. The actually number of records read will be returned as the Read Record No.
- If more than the current number of records is specified for Read Record No., the end code 1103 hex will be returned.
- If the Read Record No. is 0000, the processing will end normally even if there are no error records.
- If the Read Start Record No. is specified as 0000, the end code 110C hex is returned.

ERROR HISTORY CLEAR (2103)

Command Block

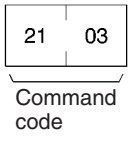

Response Block

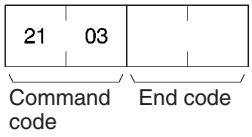

End Codes

End code (hex)	Contents
0000	Normal end
1001	Command length exceeds maximum command length.

Important Point

The Error History Clear command clears the RAM and EEP-ROM error history tables.

Appendix D
Multi-vendor Applications

This appendix provides precautions and reference material needed when using DeviceNet (CompoBus/D) Units as DeviceNet components in a multi-vendor environment.

Connecting another Company's Slaves to an OMRON Master

If a Slave has an EDS file, it can be installed in OMRON's Configurator to enable handling it just like an OMRON Slave. (OMRON's Configurator already has installed all of the Slave EDS files currently registered with the ODVA.)

In particular, be sure to determine the number of words in the OMRON Master Unit that the Slave requires for input and output.

For Connection Object Interface 2 (Polled I/O Connection), the number of I/O words allocated in the OMRON Master can be found from the "Produced Connection Size" and "Consumed Connection Size" as shown below. Up to 100 words can be allocated to inputs and another 100 words to outputs.

Produced Connection Size

This is the amount of memory (usually in bytes) allocated as input.

Consumed Connection Size

This is the amount of memory (usually in bytes) allocated as output.

If the connection size is an even number of bytes, the number of allocated words is: (bytes ÷ 2).

If the connection size is an odd number of bytes, the number of allocated words is: [(bytes +1) ÷ 2)].

If the connections size is zero (0), no words are allocated.

For Connection Object Interface 3 (Bit Strobed I/O Connection), the number of input words allocated in the OMRON Master can be found from the "Produced Connection Size" as shown below.

Produced Connection Size

This is the amount of memory (usually in bytes) allocated as input.

If the connection size is an even number of bytes, the number of allocated words is: (bytes ÷ 2).

If the connection size is an odd number of bytes, the number of allocated words is: [(bytes +1) ÷ 2)].

Connecting an OMRON Slave to another Company's Configurator

When another company's configurator (a device that makes environment settings on DeviceNet Masters and Slaves) is connected, it will be able to read settings from OMRON Masters and Slaves but not change them.

When another company's configurator is being used, we recommend creating an OMRON Slave EDS file (a file that contains each Slave's parameters and operating information). Refer to the OMRON Slave device profile as well as the Configurator's manual for details on creating an EDS file.

Master Unit Device Profile

General data	Compatible DeviceNet Specifications	Volume I - Release 2.0 Volume II - Release 2.0	
	Vendor name	OMRON Corporation	Vendor ID = 47
	Device profile name	Communication Adapter	Profile number = 12
	Manufacturer catalog number	Manual number (W267, W347)	
	Manufacturer revision	1.1	
Physical conformance data	Network current consumption	24 VDC, 30 mA max.	
	Connector type	Open plug	
	Physical insulation	Yes	
	Supported indicators	Module, Network	
	MAC ID setting	Rotary switch	
	Default MAC ID	63	
	Baud rate setting	DIP switch	
	Supported baud rates	125 kbps, 250 kbps, and 500 kbps	
Communications data	Predefined Master/Slave connection set	Group 2 client Group 2 only client Group 2 server	
	Dynamic connection support (UCMM)	Yes	
	Explicit message fragmentation support	Yes	

Object Mounting

Identity Object (01 Hex)

Object class	Attribute	Not supported
	Service	Not supported

Item		ID content	Get (read)	Set (write)	Value
Object instance	Attribute	1 Vendor	Yes	No	47
		2 Product type	Yes	No	12
		3 Product code	Yes	No	CS1W-DRT21: 02 CJ1W-DRT21: 05
		4 Revision	Yes	No	1.1
		5 Status (bits supported)	Yes	No	---
		6 Serial number	Yes	No	Unique for each Unit
		7 Product name	Yes	No	CS1W-DRM21 or CJ1W-DRM21
		8 State	No	No	---
	Service	DeviceNet Service			Parameter option
		05 Reset			None
		0E Get Attribute Single			None

Message Router Object (02 Hex)

Object class	Attribute	Not supported
	Service	Not supported
Object instance	Attribute	Not supported
	Service	Not supported
Vendor specification addition		No

DeviceNet Object (03 Hex)

Item		ID content	Get (read)	Set (write)	Value
Object class	Attribute	1 Revision	Yes	No	2
	Service	DeviceNet service			Parameter option
		0EGet Attribute Single			No

Item		ID content	Get (read)	Set (write)	Value
Object class	Attribute	1 MAC ID	Yes	No	
		2 Baud rate	Yes	No	
		3 BOI	Yes	No	0
		4 Bus–off counter	Yes	No	0
		5 Allocation information	Yes	No	
		6 MAC ID switch changed	No	No	
		7 Baud rate switch changed	No	No	
		8 MAC ID switch value	No	No	
		9 Baud rate switch value	No	No	
	Service	DeviceNet service			Parameter option
		0E Get Attribute Single			No
		4B Allocate Master/Slave Connection Set			No
		4C Release Master/Slave Connection Set			No

Connection Object (05 Hex)

Object class	Attribute	Not supported
	Service	Not supported
	Max. number of instances	203

Object instance 1	**Section**	**Information**			**Max. No. of instances**
	Instance type	Explicit Message			1
	Production trigger	Cyclic			
	Transport type	Server			
	Transport class	3			
	Attribute	**ID content**	**Get (read)**	**Set (write)**	**Value**
		1 State	Yes	No	---
		2 Instance type	Yes	No	0
		3 Transport class trigger	Yes	No	83 hex
		4 Produced connection ID	Yes	No	---
		5 Consumed connection ID	Yes	No	---
		6 Initial comm. characteristics	Yes	No	21 hex
		7 Produced connection size	Yes	No	553
		8 Consumed connection size	Yes	No	Format 16-16: 557 Format 8-8: 555 Format 16-8, 8-16: 556
		9 Expected packed rate	Yes	Yes	---
		12 Watchdog time-out action	Yes	Yes	1 or 3
		13 Produced connection path length	Yes	No	0
		14 Produced connection path	Yes	No	empty
		15 Consumed connection path length	Yes	No	0
		16 Consumed connection path	Yes	No	empty
		17 Production inhibit time	Yes	Yes	---
	Service	DeviceNet service			Parameter option
		05 Reset			No
		0E Get Attribute Single			No
		10 Set Attribute Single			No

Object instance 2	**Section**	**Information**			**Max. No. of instances**
	Instance type	Polled I/O			1
	Production trigger	Cyclic			
	Transport type	Server			
	Transport class	2			
	Attribute	**ID content**	**Get (read)**	**Set (write)**	**Value**
		1 State	Yes	No	---
		2 Instance type	Yes	No	1
		3 Transport class trigger	Yes	No	82 hex
		4 Produced connection ID	Yes	No	---
		5 Consumed connection ID	Yes	No	---
		6 Initial comm. characteristics	Yes	No	1
		7 Produced connection size	Yes	No	See note 1.
		8 Consumed connection size	Yes	No	See note 2.
		9 Expected packed rate	Yes	Yes	---
		12 Watchdog time-out action	Yes	No	0
		13 Produced connection path length	Yes	No	4
		14 Produced connection path	Yes	No	20 94 24 01 hex
		15 Consumed connection path length	Yes	No	4
		16 Consumed connection path	Yes	No	20 94 24 01 hex
		17 Production inhibit time	Yes	Yes	---
	Service	DeviceNet service			Parameter option
		05 Reset			No
		0E Get Attribute Single			No
		10 Set Attribute Single			No

Note 1. Number of input bytes used by Slave.
2. Number of output bytes used by Slave.

Object instance 3	**Section**	**Information**			**Max. No. of instances**
	Instance type	Bit Strobed I/O			1
	Production trigger	Cyclic			
	Transport type	Server			
	Transport class	2			
	Attribute	**ID content**	**Get (read)**	**Set (write)**	**Value**
		1 State	Yes	No	---
		2 Instance type	Yes	No	1
		3 Transport class trigger	Yes	No	82 hex
		4 Produced connection ID	Yes	No	---
		5 Consumed connection ID	Yes	No	---
		6 Initial comm. characteristics	Yes	No	2
		7 Produced connection size	Yes	No	See note 1.
		8 Consumed connection size	Yes	No	8
		9 Expected packed rate	Yes	Yes	---
		12 Watchdog time-out action	Yes	No	0
		13 Produced connection path length	Yes	No	0
		14 Produced connection path	Yes	No	empty
		15 Consumed connection path length	Yes	No	4
		16 Consumed connection path	Yes	No	20 94 24 01 hex
		17 Production inhibit time	Yes	Yes	---
	Service	DeviceNet service			Parameter option
		05 Reset			No
		0E Get Attribute Single			No
		10 Set Attribute Single			No

Note 1. Number of input bytes used by Slave.

Object instance 4	**Section**	**Information**			**Max. No. of instances**
	Instance type	COS/cyclic I/O			1
	Production trigger	Cyclic			
	Transport type	Client			
	Transport class	0 (no ACK)/2 (with ACK)			
	Attribute	**ID content**	**Get (read)**	**Set (write)**	**Value**
		1 State	Yes	No	---
		2 Instance type	Yes	No	1
		3 Transport class trigger	Yes	No	02 hex (with Cyclic ACK) 12 hex (with COS ACK) 00 hex (no Cyclic ACK) 10 hex (no COS ACK)
		4 Produced connection ID	Yes	No	---
		5 Consumed connection ID	Yes	No	FFFF hex (no ACK)
		6 Initial comm. characteristics	Yes	No	01 hex (with ACK) 0F hex (no ACK)
		7 Produced connection size	Yes	No	See note 1.
		8 Consumed connection size	Yes	No	---
		9 Expected packed rate	Yes	Yes	---
		12 Watchdog time-out action	Yes	No	0
		13 Produced connection path length	Yes	No	4
		14 Produced connection path	Yes	No	20 94 24 01 hex
		15 Consumed connection path length	Yes	No	0 (no ACK) 4 (with ACK)
		16 Consumed connection path	Yes	No	empty (no ACK) 20 2B 24 01 (with ACK)
		17 Production inhibit time	Yes	Yes	---
	Service	DeviceNet service			Parameter option
		05 Reset			No
		0E Get Attribute Single			No
		10 Set Attribute Single			No

Note 1. Number of input bytes used by Slave.

	Section	Information			Max. No. of instances
Object instance 5 and above	Instance type	Explicit Message/ I/O Message			199
	Production trigger	Cyclic			
	Transport type	Server			
	Transport class	0/2/3			
	Attribute	**ID content**	**Get (read)**	**Set (write)**	**Value**
		1 State	Yes	No	---
		2 Instance type	Yes	No	See note 1.
		3 Transport class trigger	Yes	No	See note 2.
		4 Produced connection ID	Yes	No	---
		5 Consumed connection ID	Yes	No	---
		6 Initial comm. characteristics	Yes	No	---
		7 Produced connection size	Yes	No	---
		8 Consumed connection size	Yes	No	---
		9 Expected packed rate	Yes	Yes	---
		12 Watchdog time-out action	Yes	No	---
		13 Produced connection path length	Yes	No	---
		14 Produced connection path	Yes	No	---
		15 Consumed connection path length	Yes	No	---
		16 Consumed connection path	Yes	No	---
		17 Production inhibit time	Yes	Yes	---
	Service	DeviceNet service			Parameter option
		05 Reset			No
		0E Get Attribute Single			No
		10 Set Attribute Single			No

1. The following table shows the instance type by communications type.

Communications type	Instance type
Explicit Message	0
I/O	1

2. The following table shows the transport class trigger by connection type.

Format	Transport class trigger
Poll client	22 hex
COS (M) client	12 hex (with ACK)/10 hex (no ACK)
COS (M) server	92 hex (with ACK)/90 hex (no ACK)
Cyclic (M) client	02 hex (with ACK)/00 hex (no ACK)
Cyclic (M) server	82 hex (with ACK)/80 hex (no ACK)
Bit-strobe client	22 hex
Explicit client	22 hex
Explicit server	83 hex

PLC Object (2F Hex)

Object class	Attribute	Not supported
	Service	Not supported

		DeviceNet service	Parameter option
Object instance 1 (CIO area)	Service	1CBlock String Read	Logical Area Address Length
		1DBlock StringN Read	Logical Area Address Length
		1EBlock String Write	Logical Area Address
		1FBlock StringN Write	Logical Area Address
Object instance 3 (DM area)	Service	1CBlock String Read	Logical Area Address Length
		1DBlock StringN Read	Logical Area Address Length
		1EBlock String Write	Logical Area Address
		1FBlock StringN Write	Logical Area Address
Object instance 4 (WR area)	Service	1CBlock String Read	Logical Area Address Length
		1DBlock StringN Read	Logical Area Address Length
		1EBlock String Write	Logical Area Address
		1FBlock StringN Write	Logical Area Address
Object instance 5 (HR area)	Service	1CBlock String Read	Logical Area Address Length
		1DBlock StringN Read	Logical Area Address Length
		1EBlock String Write	Logical Area Address
		1FBlock StringN Write	Logical Area Address
Object instance 6 (AR area)	Service	1CBlock String Read	Logical Area Address Length
		1DBlock StringN Read	Logical Area Address Length
		1EBlock String Write	Logical Area Address
		1FBlock StringN Write	Logical Area Address
Object instance 7 (TIM/CNT area)	Service	1CBlock String Read	Logical Area Address Length
		1DBlock StringN Read	Logical Area Address Length
		1EBlock String Write	Logical Area Address
		1FBlock StringN Write	Logical Area Address
Object instance 8-20 (EM0 to EMC area)	Service	1CBlock String Read	Logical Area Address Length
		1DBlock StringN Read	Logical Area Address Length
		1EBlock String Write	Logical Area Address
		1FBlock StringN Write	Logical Area Address

Note The refresh area types are shown in the following table.

PLC area	Refresh area type	Refresh address
CIO	1	CIO 0000 to CIO 6143
DM	3	D00000 to D32767
WR	4	W000 to W511
HE	5	H 000 to H511
EM (bank 0)	8	E0_00000 to E0_32767
EM (bank 1)	9	E1_00000 to E1_32767
EM (bank 2)	A	E2_00000 to E2_32767
EM (bank 3)	B	E3_00000 to E3_32767
EM (bank 4)	C	E4_00000 to E4_32767
EM (bank 5)	D	E5_00000 to E5_32767
EM (bank 6)	E	E6_00000 to E6_32767
EM (bank 7)	F	E7_00000 to E7_32767
EM (bank 8)	10	E8_00000 to E8_32767
EM (bank 9)	11	E9_00000 to E9_32767
EM (bank 10)	12	EA_00000 to EA_32767
EM (bank 11)	13	EB_00000 to EB_32767
EM (bank 12)	14	EC_00000 to EC_32767

Appendix E

DeviceNet Explicit Message Send Command for Other Manufacturer Nodes

Command	Command code
Explicit message send	2801

Explicit Message Send (2801)

Sends a DeviceNet explicit message to a specified object and receives a response.

Command Block

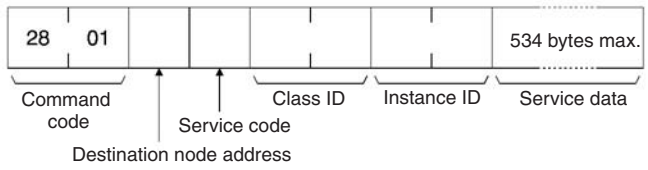

Response Block

- When a normal response has been returned for the executed explicit message:

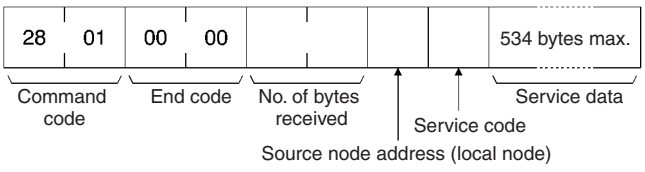

- When an error response has been returned for the executed explicit message:

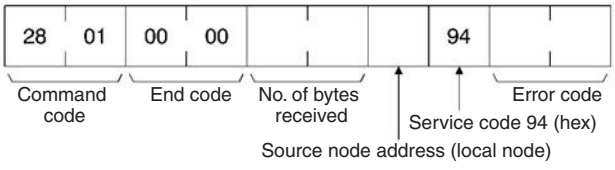

- When the explicit message execution failed or timed out:

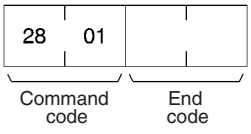

Parameter Details

[Send Destination Node Address] (Command)

Specifies the node address of the explicit message destination.
The local node DeviceNet Unit is specified for CMND and IOWR instruction control data for Explicit Message Send commands and the actual destination node is specified here.

[Service Code] (Command, response)
For commands, the service code defined by the DeviceNet is specified.
For normal responses, the value for when bit 15 of the service code specified in the command turns ON is returned. For error responses, 94 hex, which indicates an error, is returned.

[Class ID] (Command)
Specifies the class ID for the explicit message destination.

[Instance ID] (Command)
Specifies the instance ID for the explicit message destination.

[Service Data] (Command, response)
For commands, specifies the data defined by the service code.
For responses, returns the reception data defined by the service code.

[No. of Bytes Received] (Response)
Returns the number of bytes received after Source (local node) Node Address.

[Source (local node) Node Address] (Response)
Returns the local node DeviceNet node address that was the source of the explicit message.

[Error Code] (Response)
Returns the error code defined by the DeviceNet.

Explanation

- The Explicit Message Send command sends a DeviceNet-defined explicit message to an OMRON Special I/O Slave Unit or a Slave manufactured by another company and receives a response.
- Unlike other FINS commands, the Explicit Message Send command specifies the local node DeviceNet Unit as the CMND and IOWR instruction control code destination. The actual destination node is specified using the Destination Node Address in the Explicit Message Send command.
  Always specify the local node DeviceNet Unit in the CMND or IOWR instruction control code. If another node Master unit is specified an error will occur.
- If the DeviceNet Master Unit receives an explicit message, it will automatically return a response.

Note 1. Refer to DeviceNet Specifications for explicit message parameter details.

2. For information on explicit messages for OMRON slave, refer to *DeviceNet Slave Manual* (W347 or W404).

3. Contact the ODVA to obtain copies of the DeviceNet specification.
   ODVA's URL: http://www.odva.org/

Index

A

adaptors
  remote, 4, 10
allocations
  See also I/O allocations
applicable Units, 6
applications
  precautions, xviii

C

C200HW-DRM21-V1
  changing ladder programs, 82
  comparison, 33
cables
  I/O Unit Connecting Cable, 18
CIO Area
  See also I/O allocations
cleaning, 231
commands
  delivering commands through a network, 154
  explicit message commands, 171
  FINS commands lists, 147, 247
communications, 27, 194, 195
  connection types, 131, 134, 241
  connectors, 55
  cycle time, 84, 194, 238
    See also cycle time
  errors, 230
  flags, 155
  hardware preparation, 40
  high-speed, 25
  instructions, 8, 155
    completion codes, 156
  message communications, 3, 8, 19, 30, 45, 137, 200
    data area sizes, 157
    data send/receive instructions, 152
    errors, 143, 144
    explicit messages, 141
      commands
        BYTE DATA READ, 176
        BYTE DATA WRITE, 178
        CPU INFORMATION READ, 171
        CPU UNIT STATUS READ, 174
        CPU UNIT WRITE, 172
        WORD DATA READ, 177
        WORD DATA WRITE, 179
      list of PLC object services, 169
      receiving, 168
      send command for other manufacturer nodes
        EXPLICIT MESSAGE SEND (2801), 263
      sending, 161, 162
      sending using CMND(490), 164
    FINS messages, 139, 145
      command lists, 147
      commands
        ECHO BACK TEST (0801), 249
        ERROR HISTORY CLEAR (2103), 251
        READ CONTROLLER INFORMATION (0501), 247
        READ CONTROLLER STATUS (0601), 248
        READ ERROR HISTORY (2102), 250
        RESET (0403), 247
      connecting networks, 160
      sending/receiving, 146, 154
      Units supporting, 147
    maximum message response time, 201
    monitoring timer, 144
    overview, 138
    programming examples, 157
    specifications, 142
    structure, 139
    time, 200
    timing for reading responses, 156
    using, 149
  procedures prior to starting, 42
  remote I/O, 3, 19, 27
    errors, 122, 228
    example ladder programming, 120
    restarting, 120
    See also Master Units
    See also Slave Units
    specifications, 127
    starting, 120
    stopping, 120
  scan lists, 103
  software switches, 9
  status, 9
  time/Slave, 25, 29, 195
  timing, 193
Configurator
  See also DeviceNet Configurator
connections, 25, 241
  connection path, 243
  supported, 27, 29
  using allocations, 242
CPU Units
  errors, 219
    indicators, 228
  I/O memory read/write, 170
  status read/write, 169
CX-Programmer, 22
cycle time, 194
  communications, 25, 194
  reference table, 90
  setup table, 84
  specifications, 29, 238

D

DeviceNet Configurator, 19, 21, 31
  connecting an OMRON slave to another company's configurator, 253
  connections, 242
  functions, 37, 39
  making slave allocations, 98, 117, 134
  models, 37
  outline, 37
  saving files to Memory Card, 188

specifications, 38
dimensions, 59
DM Area
See also I/O allocations
dot indicators
See also seven-segment display

E

EC Directives, xx
EEPROM
data, 29, 186
errors, 207
codes, 225
display, 52
communications, 230
error flags, 74, 77, 79, 82
error log functions, 224
error log table, 224
master, 208
memory access, 216
message communications, 143, 144
network, 214
remote I/O communications, 122
scan lists, 230
slave, 223
software switch, 213
Unit, 224
explicit message communications
See also communications

F

features, 19
multi-vendor network, 19
FINS communications
command codes, 247
completion codes, 156
connecting networks, 160
See also communications
fixed allocations
See also I/O allocations
flags
See also communications
functions, 6, 30, 31, 50
DeviceNet Configurator, 4, 19
master, 3, 6, 199
Memory Card backup, 186
slave, 4, 7, 20, 200

I

I/O allocations, 96
allocation size setup table, 87
fixed, 42, 43, 105, 129
allocated words, 105, 129
changing system components, 109
CIO Area, 97
connections, 242
example, 109
procedure, 106, 129
using remote I/O master, 101
using remote I/O slave, 127
methods, 126
user-set, 20, 85, 88, 111, 130
connection types, 131, 134
connections using, 242
master user-set allocations reference table, 90
methods, 97, 111, 130
procedure, 42, 44, 131
setting through allocated DM area words, 112, 131
setting through Configurator, 117, 134
slave user-set allocations reference table, 91
using remote I/O master, 101, 102
using remote I/O slave, 128
word allocations, 26
CIO Area, 63, 64
C200 master replacement master status 1 (word n+24), 82
disconnect/connect switches (words n+6 to n+9), 73
master COS send switches (words n+2 to n+5), 72, 244
master status 1 (word n+12), 77
master status 2 (word n+13), 78
normal slave table (words n+20 to n+23), 82
registered slave table (words n+16 to n+19), 81
slave status 1 (word n+14), 79
slave status 2 (word n+15), 81
software switches 1 (word n), 64
software switches 2 (word n+1), 69
unit status 1 (word n+10), 74
unit status 2 (word n+11), 75
DM Area, 63, 84
allocation size setup table, 87
communications cycle time reference table, 90
communications cycle time setup table, 84
master user allocations setup table, 85
master user-set allocations reference table, 90
slave detailed status, 92
slave user allocations setup table, 88
slave user-set allocations reference table, 91
overview, 62
I/O Link Units, 4
C200H I/O Link Unit, 5, 12
CQM 1 I/O Link Unit, 11
errors, 229
I/O memory
read/write for CPU Units, 170
I/O response times
maximum, 197
minimum, 198
CS1-series and C200HX/HG/HE/HS PCs, 198
I/O Terminals, 4
environment-resistant, 4, 12
water-resistant, 12
I/O Units
connecting cable, 18
See also Master Units
See also Slave Units
indicators

display section, 31
Master Unit, 206
meaning, 51
message communications errors, 143
seven-segment display, 52
status
MS and NS, 51
troubleshooting, 206, 228
inspection, 231
installation, 55
instructions
CMND(490), 154, 155
RECV(098), 153, 155
SEND(090), 152, 155

L

ladder programs
replacing, 239

M

maintenance, 231
cleaning, 231
inspection, 231
Master Units, 6, 9
connecting another company's slave to an OMRON master, 253
device profile, 254
errors, 208
I/O allocations, 85
See also I/O allocations
indicators, 206
multiple, 23, 199
node address display, 52
number of, 100
precautions, 100
remote I/O
communications, 96
procedures, 101
specifications, 28, 99
status, 206
status areas, 236
system startup time, 199
user-set allocations reference table, 90
using master function, 42
memory access
errors, 216
Memory Card, 24, 30, 186
message communications
See also communications
message monitoring timer, 144
message response time, 201
mounting, 56
objects, 254
MULTIPLE I/O TERMINAL Units, 5, 17
multi-vendor environment, 253
multi-vendor network
See also features

N

networks
connecting for FINS communications, 160
errors, 214
installation procedure, 40
inter-network connections, 22
multiple masters, 199
multiple PCs on a single network, 23

O

objects, 254
Connection Object, 255
DeviceNet Object, 255
Identity Object, 254
Message Router Object, 254
PC Object, 260
See also PLC object services
operation
basic operation procedures, 40
operating environment
precautions, xvii
operating status
Master Unit, 206
overview, 2

P

PLC object services, 169
precautions, xv
applications, xviii
general, xvi
handling, 57
Master Units
number of, 100
operating environment, xvii
safety, xvi
system configuration, 55
previous models
comparison, 33
replacing ladder programs, 239
programming
examples, 157
See also instructions
See also ladder programs

R

refresh time, 196
remote I/O
communications characteristics, 194
See also communications
replacement, 232
replacing ladder programs, 239
See also setup
routing tables, 150
local network tables, 150
relay network tables, 151
RS-232C Units, 5, 12

S

safety precautions, xvi
scan lists, 103
  errors, 230
setup
  saving setup files, 24, 186
seven-segment display
  meaning, 52
Slave Units, 7, 9, 25
  communications time, 195
  connecting an OMRON slave to another company's configurator, 253
  connecting another company's slave to an OMRON master, 253
  environment-resistant, 12
  errors, 223
  faulty node address display, 52
  general-purpose, 10
  I/O allocations, 88
    See also I/O allocations
  monitoring, 22
  multiple, 23
  programmable, 12
  programming, 22
  remote I/O
    communications, 126
    procedures, 127
    specifications, 28, 29, 127
  See also adaptors
  See also I/O Link Units
  See also I/O Terminals
  See also MULTIPLE I/O TERMINAL Units
  See also RS-232C Units
  See also terminals
  special, 12
  status, 92
  system startup time, 200
  user-set allocations reference table, 91
  using slave function, 43
  water-resistant, 12
specifications
  default settings, 29
  general, 26
  network length, 25
  other functions, 30, 31
  remote I/O, 28, 29, 99
startup procedures
  communications, 42
startup times, 199
status
  areas
    comparison with previous models, 236
  indicators, 51
  Master Unit, 206
  read/write for CPU Units, 169
switches, 31, 50
  procedures prior to starting communications, 42
  settings, 53
    errors, 230
  software switches
    comparison with previous models, 235
    See also I/O allocations
    setting errors, 213
system
  configuration, 3
  startup times, 199

T

tables
  error log, 224
  local network, 150
  normal slave, 239
  registered slave, 238
  relay network, 151
  routing, 150
terminals
  analog input, 4
  analog output, 4
  B7AC Interface Terminal, 12
  remote I/O, 10
  See also I/O Terminals
  sensor, 4, 11
  temperature input, 5
timer
  message monitoring, 144
timing
  communications, 193
  reading responses, 156
troubleshooting, 205, 228

U

Units
  applicable, 7
usage, 46
user-set allocations
  See also I/O allocations

V

VME Master Boards, 3

W

waterproof, 12
word allocations
  See also I/O allocations

Revision History

A manual revision code appears as a suffix to the catalog number on the front cover of the manual.

Cat. No. W380-E1-08

Revision code

The following table outlines the changes made to the manual during each revision. Page numbers refer to the previous version.

Revision code	Date	Revised content
1	October 2000	Original production
2	July 2001	Major revisions to add the CJ-series DeviceNet Unit. “CS1” was changed to “CS” or “CS/CJ” as appropriate and the following changes were made. Other changes are as follows: **Page ix:** Manual contents updated and manuals added to table. **Page xiv:** Precaution added on providing double safety mechanisms. **Page xv:** EMC standards updated. **Page xvi:** Impedances, manufacturer, and dimensions changed. **Page 2:** Changed to “DeviceNet Unit” to clarify meaning. **Page 3:** Corrected callout at upper right of page. **Pages 8 and 25:** Number of node for FINS communications changed. **Pages 8, 16, 17, 18, 19:** Notes added. **Pages 10, 11, 15:** Products added. **Page 15:** OS updated in table. **Page 16:** Graphics changed. **Page 17:** Bottom graphic and description changed. **Page 31:** Routing table item added to table. **Page 33:** Maximum words per slave item added to table. **Page 34:** Corrected CIO 3770 number. **Page 36, 37:** Added PCI Board info to graphic and tables. **Page 39:** Note added. **Page 41:** Routing table section added. **Pages 42, 43, 44:** Slight change in procedure. **Page 48:** Graphic added. **Pages 48, 49, 50:** Information added from previous sections 8-2, 8-3, and graphics changed. **Page 51:** Graphics changed. **Page 52:** Note added, graphic added. **Page 55:** CJ-series explanation added. **Page 56:** Graphic added. **Page 60:** Information added to Software Switches 1 description. **Pages 62, 63, 64, 65:** Table items added. **Page 95:** Address numbers changed in graphic. **Page 101:** Note in item 7 corrected (Right changed to Left). **Page 101:** Same note in item 6 corrected (Right changed to Left). **Page 102:** Note 2 added concerning Configurator Ver. 2.10. **Page 105:** Change made to Step 2 of 4-3-2, and Step 3 added. **Page 107:** Table changed. **Page 109:** Allocation tables changed. **Page 114:** Changes made to Changing System Components section. **Page 118:** Note added concerning Configurator Ver. 2.10. **Page 119:** Changes made to 4-5-1. **Page 119:** Changes made to 4-5-2. **Page 120:** Note added. **Page 127:** Note 2 added concerning Configurator Ver. 2.10. **Page 133:** Note 2 added concerning Configurator Ver. 2.10. **Page 140:** Explanation of node address 0 added to table. **Page 142:** Revision made to note in section 6-1-6. **Pages 146, 147, 148, 149:** Sections 6-3 to 6-3-2 newly added. **Pages 157, 158:** Section 6-4 moved from previous location in section 6-6. **Page 160:** Note content changed. **Page 174:** Reference to manual changed in Note. **Pages 181, 182, 183, 184, 185:** Sections 7-1 to 7-1-4 newly added. **Pages 185, 186, 187:** Sections 7-2 to 7-2-2 moved from Appendix. **Page 193:** PC cycle time delay calculation in two Notes changed from 0.25 ms + 1.5 ms to 0.7 ms. **Page 194:** Table item changed from (TPC-TRF) to (TPC+TRF). **Page 197:** PC cycle time delay calculation changed from 0.25 ms + 1.5 ms to 0.7 ms. **Page 200:** Information from previous sections 8-2, 8-3 moved to pages 48, 49, 50. **Page 222:** Reference to Slaves Operation Manual changed. **Page 225:** Reference to Slaves Operation Manual changed. **Page 225:** DNnnBKUP.DAT changed to DNnnBKUP.dvf in Note 3. **Page 232:** Note added.

Revision code	Date	Revised content
03	January 2003	"PLC" was changed to "PC," where appropriate, throughout the manual. **Page v:** Changes made to text under "OMRON Product References." **Page xvi:** Text removed from table. **Page 4:** Line added after "Analog Input Terminals." Minor change made to text under "Analog Output Terminals." **Page 10:** Heading added. **Page 12:** Tables added. **Page 31:** Minor change made to text in sixth box from top of rightmost column. **Page 106:** Changes made to diagram in several places. **Page 143:** Four commands removed from bottom table. **Page 144:** One command added and one command removed from table. **Page 159:** Unit name corrected in one place in first diagram. **Pages 168, 169, 170, 171, 172, 174, 175, 176, 177, 178, 179:** Block formats changed. **Pages 168, 172, 174, 176, 177, 178:** Notes added. **Pages 168, 170, 172, 175, 176, 177, 178, 179:** Information on destination node address removed. **Pages 168, 172, 177, 178, 179:** Information on the number of bytes received removed. **Pages 168, 170, 172, 175, 176, 177, 179:** Minor numerical changes made to Class ID. **Pages 168, 170, 172:** Minor numerical changes made to Instance ID. **Page 171:** Text under block format removed. **Pages 175, 176, 178, 179:** Minor change made to information on Instance ID. **Page 252:** Manufacturer revision changed in first table. Product code and revision number changed in third table.
04	September 2003	"(-V1)" was added to the CS1W-DRM21 model number throughout the manual. **Page ix:** Note added. **Page x:** Information corrected in table. **Pages 21, 28, 184, and 210:** Information on simple backup function added. **Page 29:** Information on CS1W-DRM2-V1 added and model number corrected. **Page 31:** Information in fourth row from the bottom in rightmost column corrected. **Page 38:** Manual name corrected and catalog number added. **Page 46:** "For this Unit" added in two places. **Page 126:** Total allocation size corrected for Configurator setting. **Page 187:** Information added and term changed. **Page 222:** Manual reference added. **Page 231:** Information added to table. **Page 232:** Graphic changed. **Page 234:** Note changed. **Pages 243 to 245:** Appendix deleted.
05	July 2005	**Page v:** Information on general precautions notation added. **Page x:** Information on liability and warranty added.
06	February 2007	**Pages ix and x:** Updated manual information. **Page xx:** Added "(-V1)" to model numbers in table and changed "EN50081-2" to "EN6100-6-4" (two locations). **Page 13:** Updated list of models, added "equipped with detection functions" to remarks for Environment-resistive Slaves, and changed remarks for Analog Terminals. **Page 38:** Updated CX-Programmer model number and added catalog number for manual. **Page 48:** Added "Unit" to callouts. **Page 89:** Corrected word numbers. **Page 105:** Corrected information for node addresses 6 to 11. **Page 116:** Corrected bit number of Remote I/O Communications Start Switch. **Page 160:** Removed "or IOWR instruction." **Page 188:** Added CJ-series CPU Units toward top of table. **Pages 194, 128, and 260:** Added "W404." **Page 203:** Added error "H8." **Page 222:** Added "0D Hex" for the setting table logic error. **Page 260:** Removed "CompoBus/D."
07	March 2008	**Page 9:** Added bulleted item at bottom of page. **Page 11:** Deleted five rows from table. **Page 15:** Added eight rows to table. **Page 19:** Removed ISA Board and added PCI Board. Added "XP" to OS specifications. Changed model number for PCMCIA Card. **Pages 37 and 38:** Corrected Board/Card information in tables. **Page 39:** Corrected model numbers under "monitoring functions." **Pages 39, 143, 218, 224, and 251:** Corrected number of records to "96." **Page 109:** Changed model number in last row of table. **Page 118:** Changed model number in top figure. **Page 250:** Changed ranges for the first four parameters. **Page 253:** Changed the number of words that can be allocated to "100."

Revision code	Date	Revised content
08	November 2010	**Page ix:** Updated ISA Board and PCMCIA Board model numbers. **Page x:** Updated information for manual W342. **Page xvi:** Changed paragraph toward bottom of page. **Page 39:** Changed monitoring master error history information under monitoring functions. **Page 82:** Changed three parts of 3-2-12 Normal Slave Table. **Page 135:** Changed note 2. **Page 164:** Changed note 5. **Page 170:** Corrected service codes and removed unnecessary line from table. **Page 177:** Corrected service code. **Page 218:** Removed "96" from step 2. **Page 224:** Changed first paragraph that describes the error log table. **Page 241:** Changed note 1. **Page 250:** Made four additions to the parameter details. **Page 251:** Made addition to the explanation. **Page 256:** Corrected information for watchdog time-out action. **Page 264:** Changed note 3.

OMRON Corporation **Industrial Automation Company**
Tokyo, JAPAN

Contact: www.ia.omron.com

Regional Headquarters
OMRON EUROPE B.V.
Wegalaan 67-69-2132 JD Hoofddorp
The Netherlands
Tel: (31)2356-81-300/Fax: (31)2356-81-388

OMRON ELECTRONICS LLC
One Commerce Drive Schaumburg,
IL 60173-5302 U.S.A.
Tel: (1) 847-843-7900/Fax: (1) 847-843-7787

OMRON ASIA PACIFIC PTE. LTD.
No. 438A Alexandra Road # 05-05/08 (Lobby 2),
Alexandra Technopark,
Singapore 119967
Tel: (65) 6835-3011/Fax: (65) 6835-2711

OMRON (CHINA) CO., LTD.
Room 2211, Bank of China Tower,
200 Yin Cheng Zhong Road,
PuDong New Area, Shanghai, 200120, China
Tel: (86) 21-5037-2222/Fax: (86) 21-5037-2200

Authorized Distributor:

© OMRON Corporation 2000 All Rights Reserved.
In the interest of product improvement,
specifications are subject to change without notice.

Printed in Japan
Cat. No. W380-E1-08 1110