Care and Maintenance

UV INKJET PRINTER

JFX200-2513 EX
JFX200-1213 EX

Requests for Care and Maintenance

You can also download the latest manual from official website.

MIMAKI ENGINEERING CO., LTD.

https://mimaki.com/

D203433-31
Original instructions

Table of contents

Introduction 3
For safe use 4
Symbols 4

Maintenance

1. Daily maintenance 6
Maintenance timing 6
Precautions for maintenance 6
Installation Environment 7
Notes Regarding Work Environment, etc. 7
Storing Media 8
Storage of Ink Bottles 8
Examples of Plotting Failure 8
2. Daily maintenance 10
Maintenance of Head Surroundings 10
Maintenance the Print Head Nozzle Surface 12
Cleaning wiper and cap 14
Cleaning the NCU 19
3. Maintenance to Be Done Twice a Week 20
Washing the Head Nozzle (When Using the PR-200 Ink) 20
4. Weekly Maintenance 24
Maintenance of Machine Exterior 24
Table Maintenance 24
Washing the Ink Discharge Passage 25
Disposing of Waste Ink 26
Station Area Cleaning 28
5. Maintenance Every One or Two Weeks 30
Replacing Carriage Filters 30
MBIS maintenance 31
6. Maintenance for When Errors Occur 32
About Refilling the Cooling Water 32
Replacing the wiper 34
7. Maintenance as necessary 37
Cleaning LED UV Unit 37
Ionizer Maintenance 37
Bottle Cap Replacement 37

Introduction

Thank you for purchasing the UV-LED curable inkjet printer JFX200-2513EX, JFX200-1213EX.

Read the Request for Care and Maintenance ("this document" hereinafter) thoroughly and make sure you understand its contents to ensure safe and correct use of the product.

Please note that the illustrations contained in this manual are intended to show functions, procedures, or operations and may sometimes differ slightly from the actual machine.

Unauthorized reproduction of any portion of this document is strictly prohibited.

© 2019 MIMAKI ENGINEERING Co., Ltd.

● DISCLAIMERS

- MIMAKI ENGINEERING REJECTS ALL LIABILITY FOR DAMAGE ARISING DIRECTLY OR INDIRECTLY FROM THE USE OF THE JFX200-2513EX, JFX200-1213EX ("THIS MACHINE" HEREINAFTER), WHETHER OR NOT THE PRODUCT IS FAULTY.
- MIMAKI ENGINEERING REJECTS ALL LIABILITY FOR DAMAGE, DIRECT OR INDIRECT, TO MATERIALS CREATED WHILE USING THIS MACHINE.
- USING THIS MACHINE IN CONJUNCTION WITH DEVICES OTHER THAN THOSE RECOMMENDED BY MIMAKI ENGINEERING MAY RESULT IN FIRE OR ACCIDENTS. SUCH INCIDENTS ARE NOT COVERED BY THE PRODUCT WARRANTY. MIMAKI ENGINEERING REJECTS ALL LIABILITY FOR DAMAGE, DIRECT OR INDIRECT, ARISING FROM SUCH INCIDENTS.
- USE ONLY GENUINE MIMAKI ENGINEERING INK AND MAINTENANCE LIQUID. USE OF OTHER PRODUCTS MAY RESULT IN FAILURES OR REDUCE PRINT QUALITY. SUCH INCIDENTS ARE NOT COVERED BY THE PRODUCT WARRANTY. MIMAKI ENGINEERING REJECTS ALL LIABILITY FOR DAMAGE, DIRECT OR INDIRECT, ARISING FROM SUCH INCIDENTS.
- DO NOT ATTEMPT TO REFILL THE INK BOTTLES WITH UNAUTHORIZED INK. SUCH INCIDENTS ARE NOT COVERED BY THE PRODUCT WARRANTY. MIMAKI ENGINEERING REJECTS ALL LIABILITY FOR DAMAGE, DIRECT OR INDIRECT, ARISING FROM SUCH INCIDENTS.
- USE ONLY GENUINE MIMAKI ENGINEERING ANTI FREEZING LIQUID. USE OF OTHER ANTI FREEZING LIQUID MAY CAUSE FAILURES OR REDUCE PRINT QUALITY. SUCH INCIDENTS ARE NOT COVERED BY THE PRODUCT WARRANTY. MIMAKI ENGINEERING REJECTS ALL LIABILITY FOR DAMAGE, DIRECT OR INDIRECT, ARISING FROM SUCH INCIDENTS.
- AVOID USING UV-LED UNITS OR UV POWER SUPPLY UNITS OTHER THAN THOSE SPECIFIED BY MIMAKI ENGINEERING. USING DEVICES OTHER THAN GENUINE MIMAKI ENGINEERING DEVICES MAY RESULT IN FAILURE, ELECTRIC SHOCK, OR FIRE. SUCH INCIDENTS ARE NOT COVERED BY THE PRODUCT WARRANTY. MIMAKI ENGINEERING REJECTS ALL LIABILITY FOR DAMAGE, DIRECT OR INDIRECT, ARISING FROM SUCH INCIDENTS.

For safe use

Symbols

In this document, symbols are used for explaining the contents of cautions on operation. The symbol to be displayed differs depending on the caution content. Please understand the meaning of each symbol and use this machine safely and correctly.

● Examples of symbols

Meaning		
⚠WARNING	WARNING	Failure to observe the instructions given with this symbol can result in death or serious injuries to personnel. Be sure to read it carefully and use the printer properly.
⚠CAUTION	CAUTION	Failure to observe the instructions given with this symbol can result in minor or medium injuries to personnel.
⚠	GENERAL WARNING	This symbol indicates that the items shown need to be noted. Specific notes are drawn in the figure ⚠.
●	GENERAL MANDATORY ACTION	This symbol indicates that the action shown must be executed. Specific instruction is drawn in the figure ●.
⃠	GENERAL PROHIBITION	This symbol indicates that the action shown is prohibited. Specific action that is prohibited is drawn in the figure ⃠.
Important!	IMPORTANT	Important notes for the use of this printer are given with this symbol. Understand the notes thoroughly to operate the printer properly.
	HINT	Useful information is given with this symbol. Understand the notes thoroughly to operate the printer properly.
	REFERENCE	This symbol indicates the reference page for related contents. Click the text to display the corresponding page.

Maintenance

To ensure years of precise performance, maintain the machine periodically based on frequency of use.
Read the maintenance precautions thoroughly before maintaining this product.

1. Daily maintenance

JFX200-2513EX, JFX200-1213EX (hereafter called "this machine") is a precision machine with extremely fine mechanisms. Especially, the nozzle surface of the head from where the ink is discharged may get affected by even a small amount of adhered dust or paper powder, making it impossible to get normal print results.

To use it with better conditions, we recommend performing the following daily maintenance.

Maintenance timing

Maintenance timing	Maintenance items (reference page)
Daily (after one day of work)	☞ "Maintenance of Head Surroundings"(P. 10)
	☞ "Maintenance the Print Head Nozzle Surface"(P. 12)
	☞ "Cleaning wiper and cap"(P. 14)
	☞ "Cleaning the NCU"(P. 19)
Twice a week	☞ "Washing the Head Nozzle (When Using the PR-200 Ink)"(P. 20) (PR- 200Ver.2)
Weekly (after a week of work)	☞ "Maintenance of Machine Exterior"(P. 24)
	☞ "Table Maintenance"(P. 24)
	☞ "Washing the Ink Discharge Passage"(P. 25)
	☞ "Disposing of Waste Ink"(P. 26)
	☞ "Station Area Cleaning"(P. 28)
About once every one or two weeks	☞ "Replacing Carriage Filters"(P. 30)
	☞ "MBIS maintenance"(P. 31)
Once a month	☞ "Washing the Head Nozzle (When Using the PR-200 Ink)"(P. 20) (PR- 200Ver.3)
When an error occurs	☞ "Refilling the Coolant"(P. 33)
	☞ "Replacing the wiper"(P. 34)
Maintenance as necessary	☞ "Cleaning LED UV Unit"(P. 12)
	☞ "Ionizer Maintenance"(P. 37)
	☞ "Bottle Cap Replacement"(P. 37)

Tools necessary for maintenance	
F-200/LF-200 maintenance liquid (PN : SPC-0568)	PR-200 maintenance liquid (PN : C-ML013-Z-B2-1-KW) *When using the PR-200 ink
Cotton swab	Cleaning Stick for Head Surrounding (PN : SPC-0527)
Soft cloth	Gloves

Precautions for maintenance

Pay attention to the following items when maintaining this machine.

- LED UV unit becomes very hot. Turn off the LED UV unit and perform maintenance once the device cools down sufficiently. There is a risk of burns.

	• Switch off the power button and unplug the power cable before cleaning. It may cause unexpected accidents. • If you will not be using the machine for a long time, make sure you remove the power cable from the outlet and remove the media that is set in the machine.
	• When handling ink and washing liquid, pay close attention to ventilation and be sure to wear the included safety glasses and gloves. The ink or washing liquid may get in your eyes.
	• Do not use chemicals containing benzine, thinner or abrasives. It may cause degeneration/ deformation of cover surface. • Do not lubricate the inside of device with lubricating oil or other agents. Doing so may cause malfunction. • Make sure the washing liquid and ink do not get on the cover. This may cause degeneration/ deformation of the cover surface. • Aggregates are generated in the UV ink (ultraviolet curable ink) if it is mixed with water and alcohol. Do not let water or alcohol stick on the nozzle surface, cap, wiper, or anywhere near the head.
	• Never disassemble or modify this machine or ink bottle. Disassembling or modifying will result either in electric shock or malfunction of this machine.
	• Do not let moisture enter this machine. If the inside of the machine gets wet, it may cause electric shock and damage.

Installation Environment

- Do not use in a dusty place. It may lead to problems in the printer or poor printing.
- For stable printing, use this machine in an environment with a temperature in the range of +15 ℃ to +30 ℃ (59°F to 86°F) and Rh in the range of 35 to 65%.

Notes Regarding Work Environment, etc.

The frequency of configuring print settings and conducting maintenance is largely influenced by the work environment in which printing is performed and the conditions of the used media. Make sure that you have completely understood the following items before using this machine.

● If there is a lot of dust or dirt in the work environment

- To keep the nozzle surface clean, perform interval wiping after about every 1500 mm of printing. (Operation Manual, Chapter 3: "Setting Nozzle Face Cleaning Frequency")
- Change the settings of interval wiping according to the amount of dust or dirt.

● When the head gap value is set to large due to reasons such as fibers protruding from the media

● When media that can easily reflect UV light, such as glass or glossy metal is used

- UV light may get exposed onto the nozzle due to frequent mist scattering. Increase the REFRESH level during plotting, then set interval wiping.
  (Operation Manual, Chapter 3: "Other Settings")
  (Operation Manual, Chapter 3: "Setting Nozzle Face Cleaning Frequency")
- Increase the frequency of all types of maintenance.

In case of low usage ink (print head)

- Ink discharge of less used print heads tends to become unstable as compared to other print heads. Increase the REFRESH level during plotting, then keep the head usage rate above certain value. (Operation Manual, Chapter 3: "Other Settings")

When printing on media that is prone to electrostatic charge

When printing in an environment with low humidity (in winters, etc.)

- Take thorough measures against electrostatic charging with the help of humidifier, etc. Static electricity attracts mist and dust around the printing area and the head. Set interval wiping if printing is to be continued for a long time.
  (Operation Manual, Chapter 3: "Setting Nozzle Face Cleaning Frequency")

When printing on uneven media (three-dimensional medium)

- To keep the head gap as constant as possible, set unnecessary media, etc. even at locations other than the location inside the suction area where the printing media is set. If deterioration of the head due to reflected light is neglected for a long period of time, it may cause malfunction to the point where the head may have to be replaced.

Storing Media

Store the media in a dust-proof place with no direct sunlight. Also, avoid storing the media in hot or highly humid places.

Storage of Ink Bottles

Pay attention to the following points when storing ink bottles.

- Store in a place with low humidity and no direct sunlight.
- Do not drop or smash the ink bottle.
- Avoid contamination or electrostatic discharge of the Ink IC chip.
- Always store the ink bottle and Ink IC chip together.

Ink bottle and ink IC chip

Examples of Plotting Failure

Discharge failure of the head (head nozzle) due to dust is a typical example of plotting failure.

Periodically check the condition of the nozzle before output or during output to avoid using it in defective state.

The condition of the nozzle can be checked by [TEST PRINT] of this machine.

(Operation Manual, Chapter 2 "Taking a Test Print")

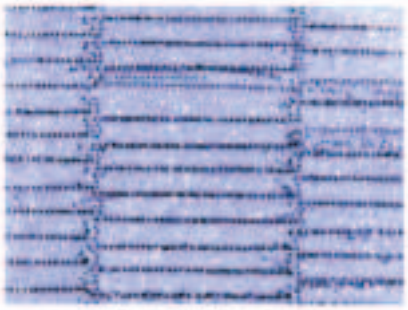

Deflection

Nozzle clogging

Ink dropping

Satellite

2. Daily maintenance

- When cleaning the area around the head/capping station/wiper, use a Cleaning Stick for Head Surrounding (PN : SPC-0527).
  When using a normal cotton swab, lint threads may remain and cause a secondary failure.
- Make sure you perform maintenance for the ink cap and wiper in the capping station everyday. If they are left dirty, the nozzle surface may get dirty, dust or hardened ink may get stuck to the nozzle, resulting in poor discharge.
- Make sure you clean the bottom surface of the carriage everyday so that it does not get dirty from ink or dust. If it is left dirty, dirt or hardened ink may smear onto the nozzle due to wiper operation during head cleaning.
- When you clean the bottom surface of the carriage, be careful so as not to rub the nozzle.

Maintenance of Head Surroundings

Extremely minute mechanisms are used for the head, and therefore proper care must be taken when performing maintenance.

Some gel-like ink or dust may be stuck in the bottom part of the slider and around the head. Rub it off using a clean stick or another similar tool. When rubbing, make sure you never rub the nozzle part of the head.

Tools required for cleaning	• Cleaning Stick for Head Surrounding (PN : SPC-0527)	• Safety glasses	• Gloves

- If the ink gets on your skin or your clothes, rinse it out immediately with soap or water. If you get the ink in your eyes, wash them immediately with water and consult a doctor.

- When handling ink and washing liquid, pay close attention to ventilation and be sure to wear the included safety glasses and gloves. The ink or washing liquid may get in your eyes.

- Make sure you clean the bottom surface of the carriage everyday so that it does not get dirty from ink or dust. If it is left dirty, dirt or hardened ink may smear onto the nozzle due to wiper operation during head cleaning.
- When you clean the bottom surface of the carriage, be careful so as not to rub the nozzle.

1 **Remove the cover on the right side of the Y-bar.**

- Remove the screws (2 places) and remove the cover.

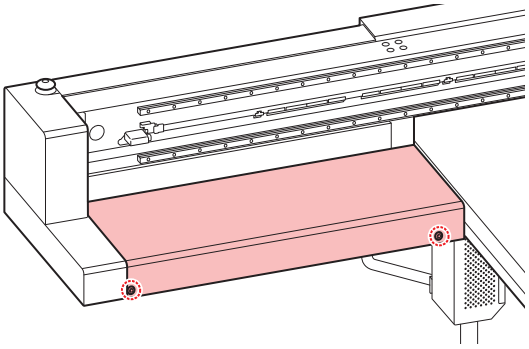

2 **Press the [MAINT.] key in LOCAL.**

```
CARRIAGE OUT
                    [ENT]
```

3 **Press the [ENTER] key.**

```
MOVE POSITION
: STATION MAINT.
```

4 **Press ▲ ▼ to select [HEAD MAINT.].**

```
MOVE POSITION
: HEAD MAINT.
```

5 **Press the [ENTER] key.**

- Carriage moves to the left edge of the machine.

6 **Wipe any ink on the sides of the head and carriage using a clean stick.**

- Never rub the nozzle part.

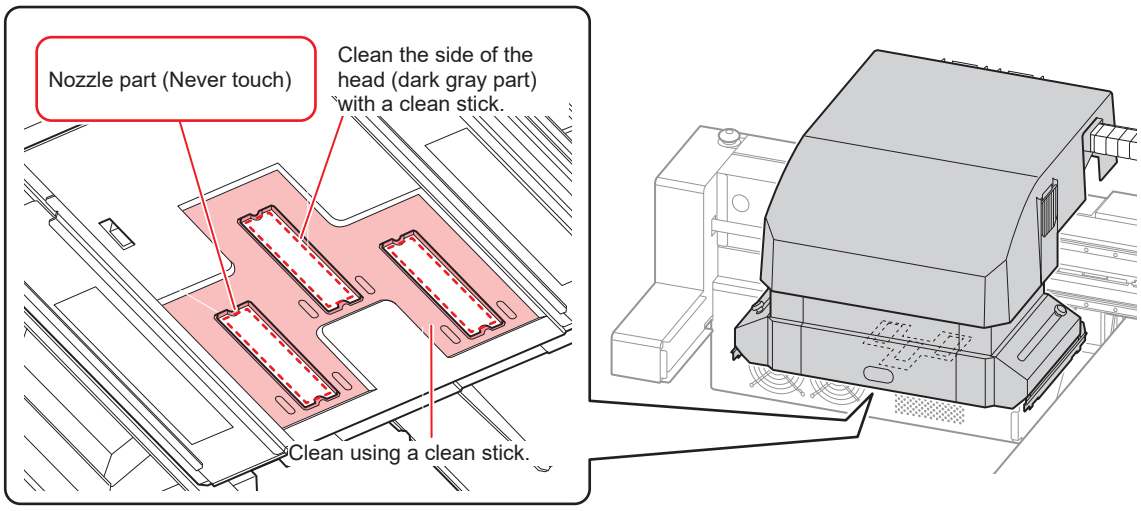

Important!

- Clean it until it looks like the picture.
- Clean the nozzle surface if the shape of the cap rubber is visible on it.
- If you need to leave your seat during maintenance, press the [ENTER] key to end the cleaning process. If left as-is, the ink will harden due to the effects of external light, resulting in nozzle clogging or other harmful effects.

7 **Once the cleaning is complete, press the [ENTER] key.**

```
HEAD MAINT.
COMPLETED          [ENT]
```

Cleaning LED UV Unit

Periodically clean the ink and dust stuck on the LED UV.

Important!

- Be careful not to damage the irradiation part on the bottom of the unit when cleaning the LED UV. If the dirt or shading on the irradiation part exceeds a certain limit, it may cause banding due to poor curing of the ink.

Maintenance the Print Head Nozzle Surface

Clean the print head nozzle surface with maintenance liquid 11 or 15 to prevent ejection failure or deflection.

- Do not use anything other than maintenance liquid 11 or 15 to clean the print head nozzle surface. This will increase the risk of machine failure or ejection failures.

- The print head uses an extremely delicate mechanism. Take great care when handling it.

Tools required for cleaning	• Cleaning Stick for Head Surrounding (PN : SPC-0527)	• Maintenance liquid 11 • Maintenance liquid 15

- If the ink gets on your skin or your clothes, rinse it out immediately with soap or water. If you get the ink in your eyes, wash them immediately with water and consult a doctor.

- When handling ink and washing liquid, pay close attention to ventilation and be sure to wear the included safety glasses and gloves. The ink or washing liquid may get in your eyes.

1 **Execute head cleaning[NORMAL].Head Cleaning**

- Perform cleaning before maintenance so that no ink adheres to the nozzle surface.

2 **Remove the cover on the right side of the Y-bar.**

- Remove the screws (2 places) and remove the cover.

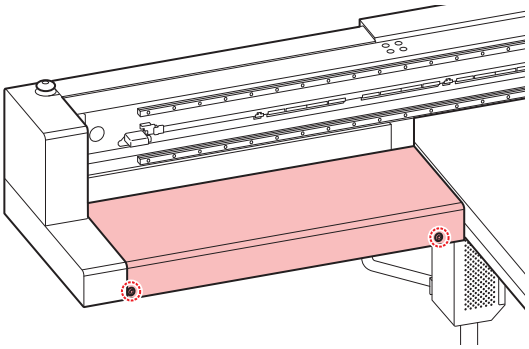

3 **Press the [MAINT.] key in LOCAL.**

```
CARRIAGE OUT
                    [ENT]
```

4 **Press the [ENTER] key.**

```
MOVE POSITION
: STATION MAINT.
```

5 **Press ▲ ▼ to select [HEAD MAINT.].**

```
MOVE POSITION
: HEAD MAINT.
```

6 **Press the [ENTER] key.**

- Carriage moves to the left edge of the machine.

7 **Use a clean stick soaked in the maintenance liquid.**

8 **Clean the print head nozzles surface.**

- Clean the head nozzle surface toward the front from the rear of the head using a cleaning stick.

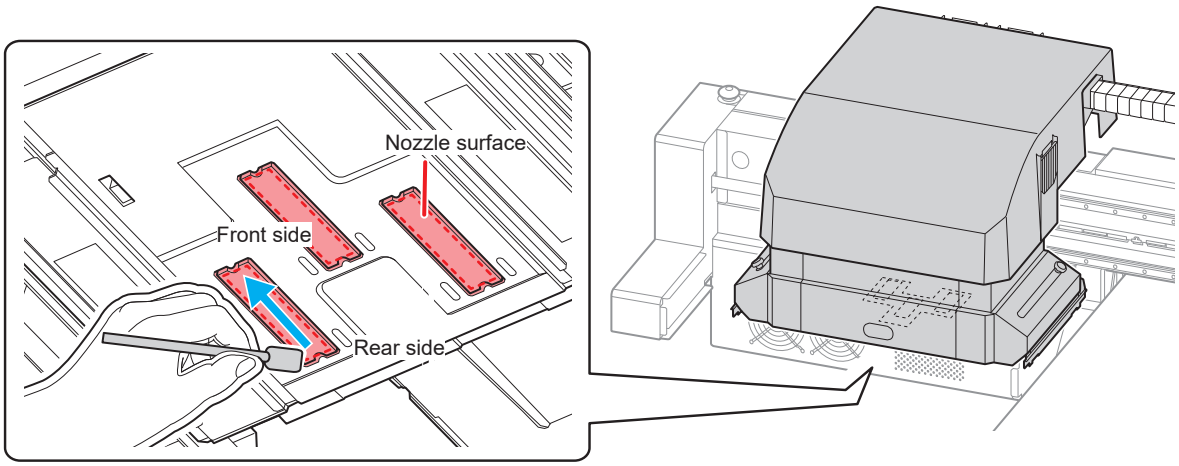

- Be sure to clean using a cleaning stick.
- Do not rub or press firmly on the sponge part with your fingers against the nozzle surface. This may damage the nozzle surface and result in ejection failure.
- Do not reuse cleaning sticks once used. This may cause nozzle clogging.

9 **Once the cleaning is complete, press the [ENTER] key.**

```
HEAD MAINT.
COMPLETED           [ENT]
```

10 **Execute head cleaning[NORMAL].Head Cleaning**

Cleaning wiper and cap

Important!

- Clean the wiper and the surrounding area twice a week (frequency of cleaning differs depending on the usage frequency of the printer).
- If there are severe bends or dirt on the wiper, replace it with a new wiper.
  ☞ "Replacing the wiper"(P. 34)
- When cleaning, make sure no fibers from the clean stick are left behind. Residual fibers may cause the printing quality to deteriorate.

1 **Press the [MAINT.] key in LOCAL.**

```
CARRIAGE OUT
                    [ENT]
```

2 **Press the [ENTER] key.**

```
MOVE POSITION
: STATION MAINT.
```

3 **Press ▲ ▼ to select [STATION MAINT.].**

```
MOVE POSITION
: STATION MAINT.
```

4 **Press the [ENTER] key.**

- Carriage moves onto the table.

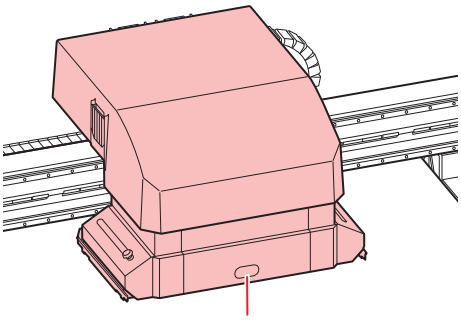

5 **Remove the wiper.**

- Pull out the wiper by holding the protrusions at both the ends.

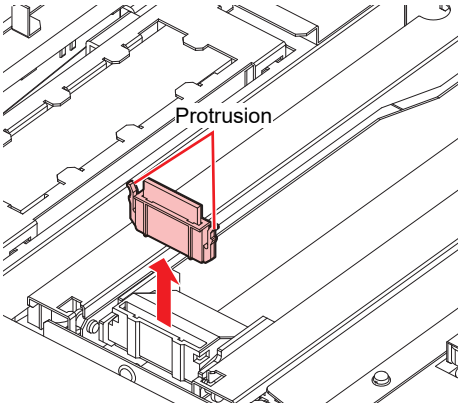

6 Clean the wiper and the bracket.

- Wipe off any ink on the wiper and the bracket using a clean stick soaked in washing liquid. Wipe it off properly so that there is no residual washing liquid.

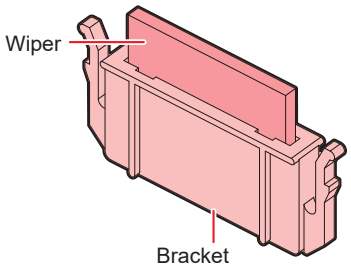

Important!

- Clean it until it looks like the picture.

- After cleaning, make sure the wiper and bracket are aligned horizontally.

7 Clean the wiper cleaner.

- Clean the tip of the wiper cleaner with a clean stick.

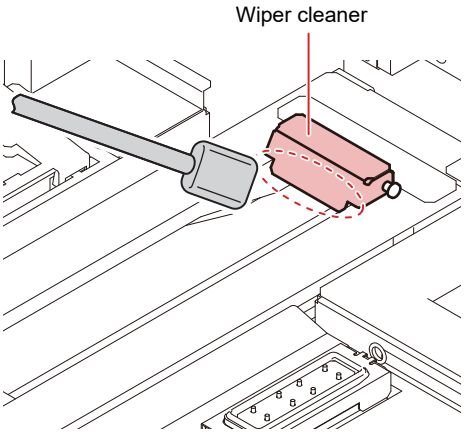

- Lift the wiper cleaner up and clean the ink adhering to the inside with a clean stick.

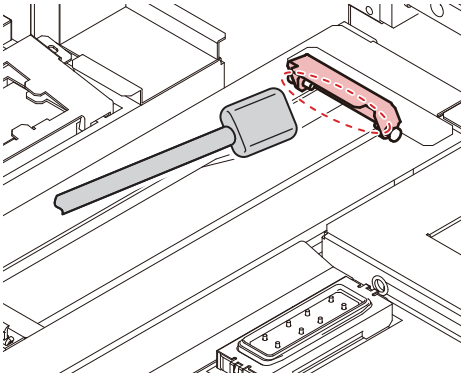

- Clean around the wiper cleaner.

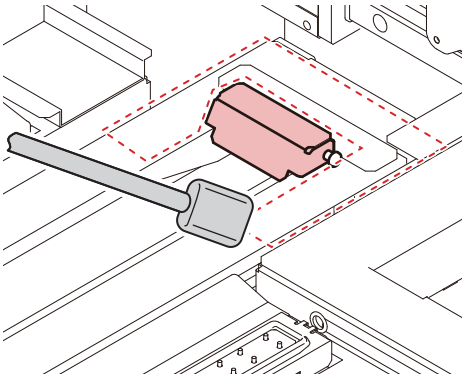

- Do not remove the wiper cleaner from the bracket.
- Only clean the front side of the wiper cleaner. (There is no need to clean the backside)
- After cleaning the wiper cleaner, check that the cleaner is not facing up.

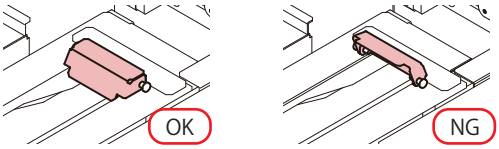

8 **Return the wiper to its original position.**

- Insert the wiper by holding both the ends.

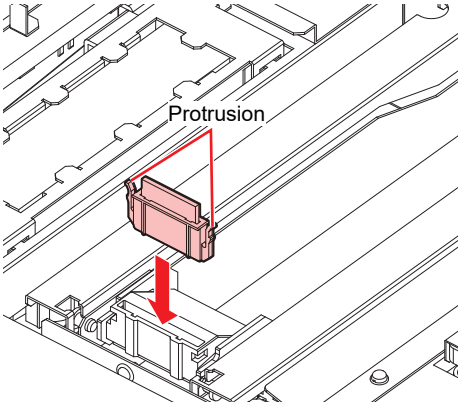

9 **Clean the cap rubber and cap rubber cover.**

- Wipe off any ink on the cap rubber and the cap rubber cover using a clean stick soaked in washing liquid.
  Wipe it off properly so that there is no residual washing liquid.

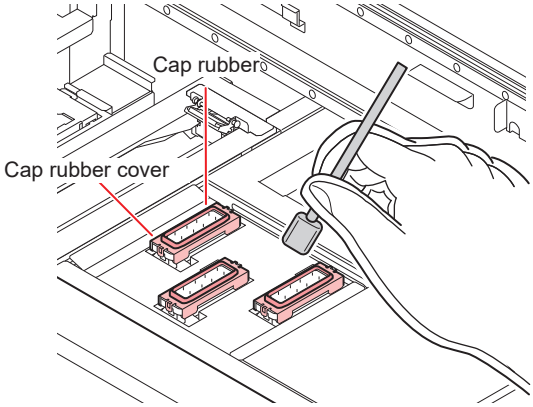

Important!

- Clean it until it looks like the picture.

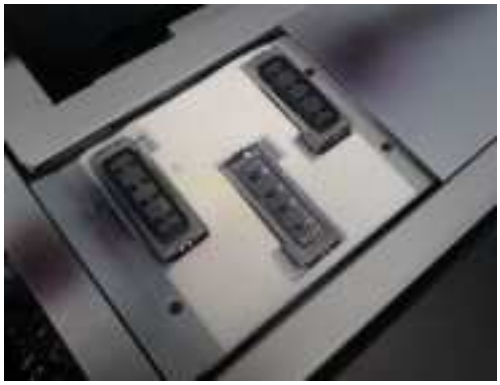

- After cleaning, make sure the cap rubber and the mesh inside the cap have not come off.

10 **Once the cleaning is complete, press the [ENTER] key.**

- After the initial operation, the display returns to Step 1.

Performing station maintenance without [MAINT.] key

You can select [STATION MAINT.] using the [FUNCTION] key under LOCAL, without pressing the [MAINT.] key.

1 **Press the [FUNCTION] key in LOCAL.**

2 **Press ▲ ▼ to select [MAINTENANCE].**

3 **Press the [ENTER] key twice.**

- This will put the machine in the same state as when you press the [MAINT.] key in LOCAL.

Cleaning the NCU

Ink and dust adhere to the NCU.

The NCU cannot operate normally if there is ink or dust adhering to it.

1 Press the [MAINT.] key in LOCAL.

```
CARRIAGE OUT
                    [ENT]
```

2 Press the [ENTER] key.

```
MOVE POSITION
: STATION MAINT.
```

3 Press ▲ ▼ to select [STATION MAINT.].

```
MOVE POSITION
: STATION MAINT.
```

4 Press the [ENTER] key.

- Carriage moves onto the table.

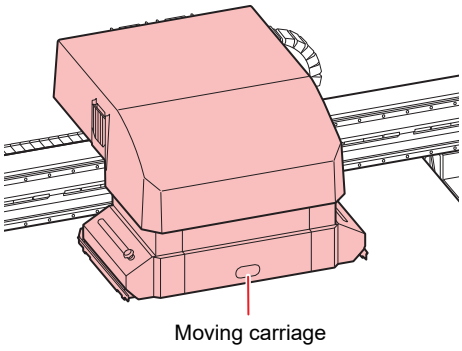

5 Wipe off any ink or dust adhering to the NCU.

- Wipe the inside and the outside with a clean stick (SPC-0421) soaked in washing liquid.
- Wipe it off properly so that there is no residual washing liquid.

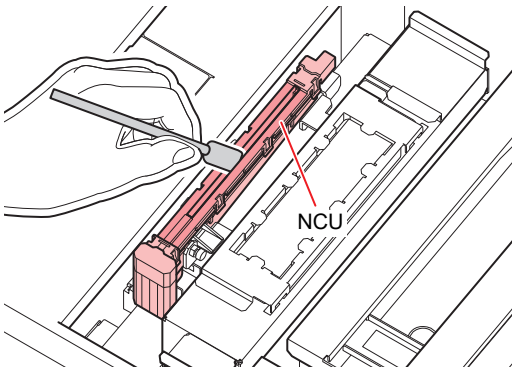

6 Once the cleaning is complete, press the [ENTER] key.

- After the initial operation, the display returns to Step 1.

3. Maintenance to Be Done Twice a Week

Washing the Head Nozzle (When Using the PR-200 Ink)

Models equipped with PR-200 may cause nozzle clogging. Check the version indicated on the label of the PR-200 ink cartridge/pack/bottle, and wash the nozzle twice a week for Ver. 2 and once a month for Ver. 3.

Version location on the label	
220 mL cartridge	250 mL bottle
	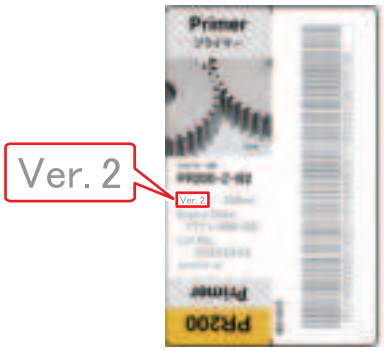
600 mL pack	1L bottle

Required maintenance liquid	• F-200/LF-200 Maintenance Liquid (SPC-0568)	• PR-200 Maintenance Liquid (C-ML013-Z-B2-1-KW)

1 **Press the [MAINT.] key in LOCAL.**

```
CARRIAGE OUT
                    [ENT]
```

2 **Press ▲ ▼ to select [NOZZLE WASH].**

```
NOZZLE WASH
                    [ENT]
```

3 **Press the [ENTER] key.**

- Carriage moves.

```
WIPER CLEANING
COMPLETED (NEXT)  [ENT]
```

Important!

- [COMPLETED (NEXT): ENT] is displayed on the screen until the cleaning work of wiper is complete. Press the [ENTER] key after Step 4 is complete.
  If you press the [ENTER] key before the cleaning is complete, the machine moves to the next washing step.

4 Clean the wiper and the bracket.

(1) Open the right maintenance cover, hold the protrusions at both the ends of the wiper and pull it out.

(2) Use a clean stick soaked in the F-200/LF-200 Maintenance Liquid (SPC-0568).

- Wipe it off properly so that there is no residual F-200/LF-200 Washing Liquid.

(3) Hold the wiper by the protrusions at both the ends and push it back to the original position.

Important!

- When cleaning the wiper, bracket, cap rubber, and cap rubber cover, only use the F-200/LF-200 Maintenance Liquid. Do not use the PR-200 Maintenance Liquid (C-ML013-Z-B2-1-KW).

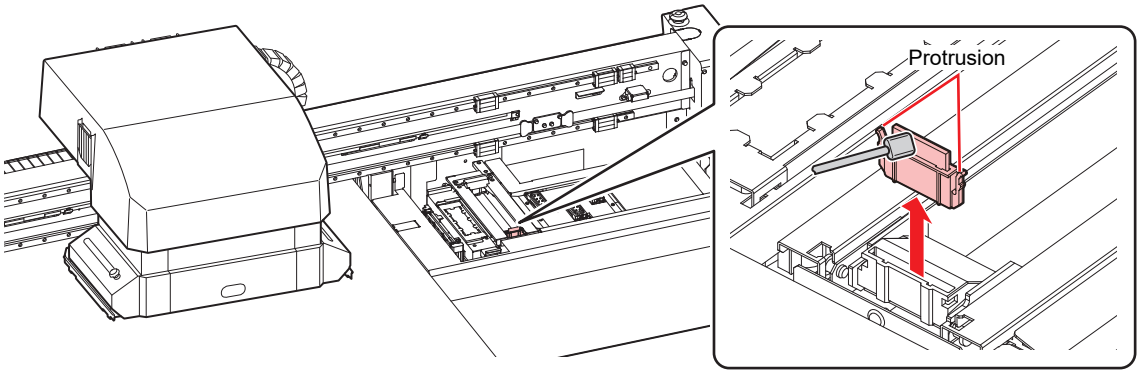

5 Press the [ENTER] key.

```
CAP CLEANING
COMPLETED (NEXT)   [ENT]
```

Important!

- [COMPLETED (NEXT): ENT] is displayed on the screen until the cleaning of the cap is complete. Press the [ENTER] key after Step 6 is complete.
  If you press the [ENTER] key before the cleaning is complete, the machine moves to the next washing step.

6 **Clean the cap rubber and cap rubber cover.**

- Wipe off any ink on the cap rubber and the cap rubber cover using a clean stick soaked in the F-200/LF-200 Maintenance Liquid. Thoroughly wipe off, ensuring there is no residual F-200/LF-200 Maintenance Liquid.
- At this time, the discharge passage is cleaned automatically.

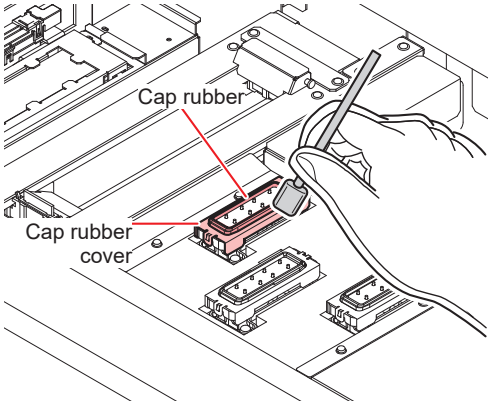

7 **Press the [ENTER] key.**

```
FILL THE LIQUID.
COMPLETED (NEXT)  [ENT]
```

Important!
- [COMPLETED (NEXT): ENT] is displayed on the screen until the washing liquid is filled. Press the [ENTER] key after Step 8 is complete. If you press the [ENTER] key before the washing liquid is filled, the carriage returns to its original position.

8 **Using a dropper, fill only the cap of the head equipped with PR-200 with PR-200 Maintenance Liquid (C-ML013-Z-B2-1-KW). Fill until full.**

- Fill the cap with washing liquid until it is about to overflow.

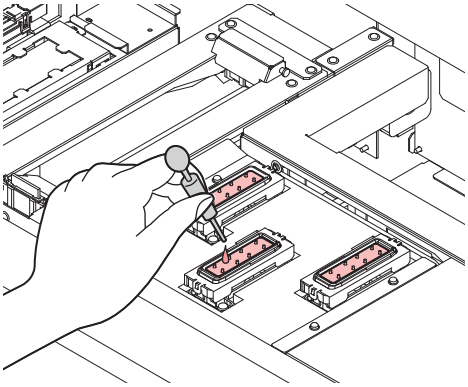

9 **Press ▲ ▼ and enter the duration. (Firmware Ver2.6 or later)**

- The recommended duration is one minute.

10 **Press the [ENTER] key.**

- This will absorb the washing liquid filled in the cap.
- The screen on the right is displayed while the cleaning liquid is still left in the cap.
- After the duration has passed, the display returns to Step 2.

```
PLEASE WAIT
00 : 00
```
→
```
**CLEANING**
PLEASE WAIT
```

11 Execute head cleaning (HARD) once for the head equipped with PR-200.

(1) Press the [END] key to display the LOCAL screen.

(2) Press the [CLEANING] key, then press ▲▼ to select CLEANING: HARD, and press the [ENTER] key.

(3) In SELECT HEAD, press ▲▼ to select only Head 3, and press the [ENTER] key.

```
SELECT HEAD
_ _ 3
```

12 Check the nozzle status by performing a test print.

- When the nozzle clogging occurs, execute nozzle cleaning (HARD) again then check the nozzle status.

Important!

- If the nozzle clogging is not resolved even after repeating this cleaning 3 times, contact your local distributor, or our sales office or call center.

4. Weekly Maintenance

Maintenance of Machine Exterior

Depending on the usage environment, trash and dust may stick to the exterior of the main unit. To prevent dust from entering the head moving part, soak a soft piece of cloth in water, wring it tightly and then wipe off the dust.

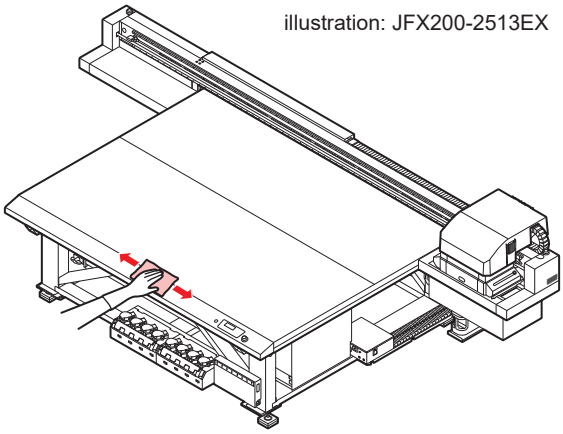

Table Maintenance

- Turn off the main power supply and unplug the power cable before carrying out maintenance.

Continuing to use while dirty will cause dried ink and attached dust to rub against the head nozzle surface, and lead to ejection failures (e.g., nozzle clogging or deflection).

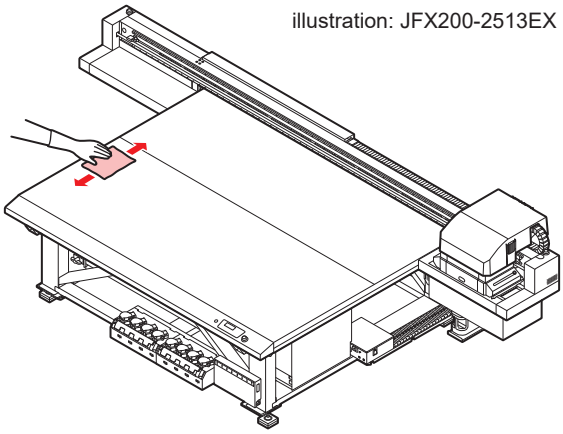

- Do not use organic solvents such as acetone to clean the table. These may damage the table. If the table becomes damaged, it cannot be repaired on-site.
- Be careful to prevent liquids from getting inside the machine. Otherwise there is a risk of failure, electric shock, or fire.

- If you have to use IPA or ethanol to clean off ink or color transfers from the table surface, lightly dampen a soft cloth or paper towel with a small amount of the organic solvent, then wipe it off. Exercise extreme care to ensure that no organic solvent seeps inside the table.
- Remove debris and solidified ink frequently using a soft brush, dry cloth, or paper towel.
- For heavy soiling, wipe using a soft cloth soaked in diluted neutral detergent and thoroughly wrung out.
- Areas such as the table grooves and screw holes are particularly susceptible to dirt buildup, and should be cleaned frequently.
- Solidified ink on surfaces can be removed using a spatula, but care must be taken to avoid scratches.

Washing the Ink Discharge Passage

Wash the ink discharge passage periodically to prevent ink from hardening and clogging inside it.

1 Press the [MAINT.] key in LOCAL.

```
CARRIAGE OUT
                [ENT]
```

2 Press ▲ ▼ to select [DISWAY WASH].

```
DISWAY WASH
                [ENT]
```

3 Press the [ENTER] key.

- Carriage moves onto the table.
- Repeat the dry suction operation until the washing is complete.

```
DISWAY WASH
COMPLETED       [ENT]
```

4 Take washing liquid in a dropper and fill the cap with it until it is full.

- Fill the cap with washing liquid until it is about to overflow.

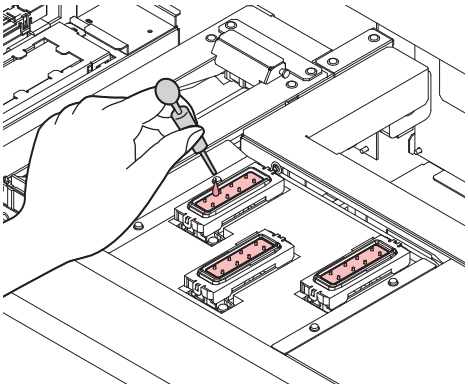

5 Press the [ENTER] key.

- After the dry suction operation is performed for 30 seconds, the display returns to Step 2.

```
DISWAY WASH
PLEASE WAIT
```

Disposing of Waste Ink

- When disposing of the waste ink from the waste ink tank, be sure to wear the included safety glasses and gloves.
  Otherwise you may get ink in your eyes.

Important!

- Do not replace the waste ink tank while this machine is in operation (printing or cleaning).
- If waste ink overflows during work, wipe it off with a waste cloth.

1 Open waste ink tank cover.

- Remove the screws on the waste ink tank cover, and open the cover to the front.

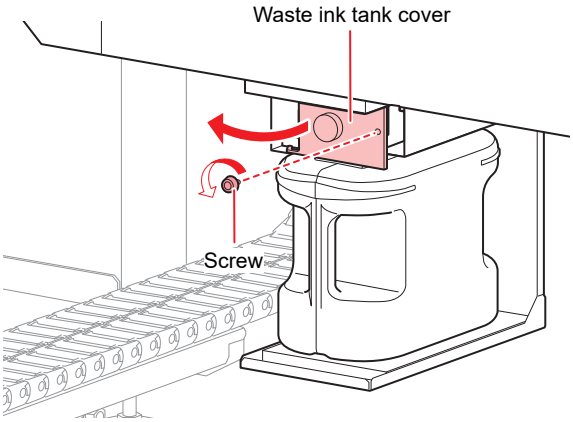

2 Remove the waste ink tank.

(1) Hold the handle of the waste ink tank and pull it to the front.

(2) Put a cap on the waste ink tank removed.

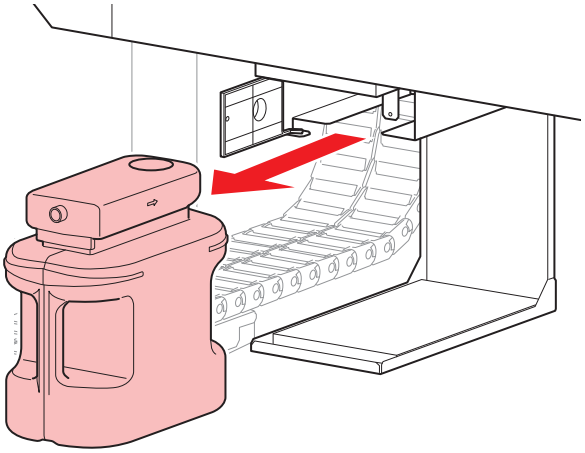

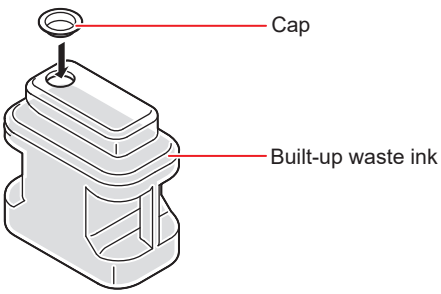

3 Replace the waste ink tank.

(1) Prepare a new waste ink tank.

(2) Insert by holding the handle of the waste ink tank.

(3) Lift the waste ink tank and check that it is set just below the drain port.

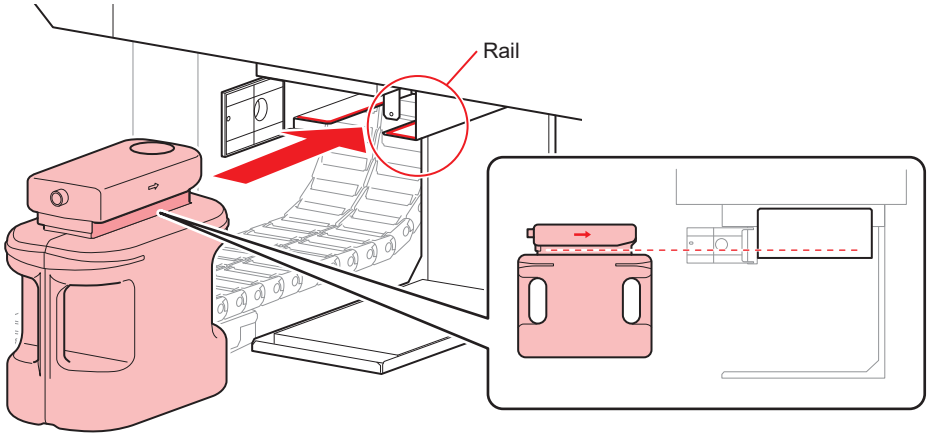

- Request an industrial waste processor to process the waste ink.
- Some of the components of (photopolymerization initiator) waste ink are poisonous to aquatic organisms. Prevent leakage flow to natural water bodies (such as rivers) and domestic sewages (such as toilets, roads).

4 Close the waste ink tank cover.

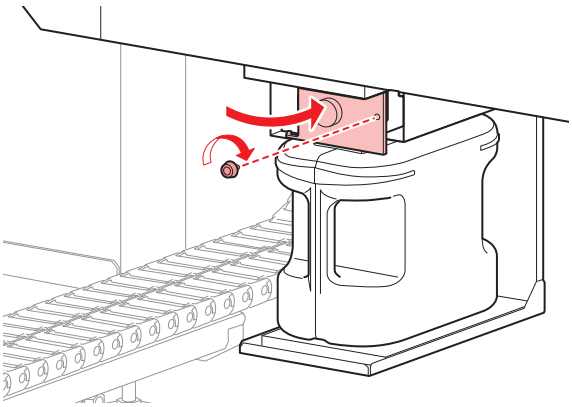

5 Select [InkTankExchange] from the MAINTENANCE menu.

(1) Press the [FUNCTION] key in LOCAL.

(2) Press ▲ ▼ to select [MAINTENANCE], and press the [ENTER] key.

(3) Press ▲ ▼ to select [InkTankExchange].

```
MAINTENANCE
InkTankExchange        [ENT]
```

6 Press the [ENTER] key to release.

```
InkTankExchange
EXCHANGE               [ENT]
```

Station Area Cleaning

We recommend that you clean the machine often to maintain the quality of the machine and the images.

Important!

- Clean the area around the station twice a week (frequency of cleaning differs depending on the usage frequency of the printer).
- If the ink left in the waste ink tray hardens due to UV light, the ink discharged during flushing cannot move to the waste ink bottle. We recommend that you clean the waste ink tray often.

1 **Press the [MAINT.] key in LOCAL.**

```
CARRIAGE OUT
                    [ENT]
```

2 **Press the [ENTER] key.**

```
MOVE POSITION
: STATION MAINT.
```

3 **Press ▲ ▼ to select [STATION MAINT.] and then press the [ENTER] key.**

- Carriage moves onto the table.
- Clean the waste ink tray.

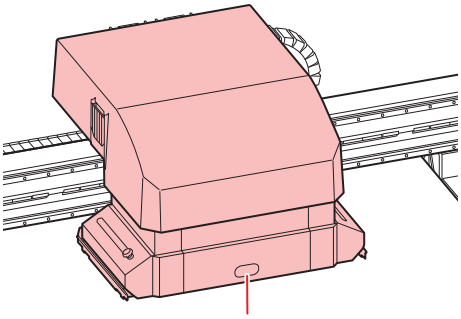

4 **Use a cloth to wipe off the ink around the waste ink tray.**

- Clean the gray area shown in the figure below.
- If the ink is stuck to the surface and cannot be wiped, use a spatula or another similar tool to scrape it off.

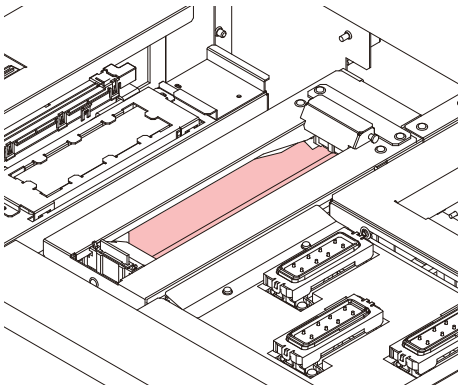

5 Wipe off any ink on the flushing unit or the shutter.

- Wipe off the ink using a clean stick soaked in washing liquid. Wipe it off properly so that there is no residual washing liquid.

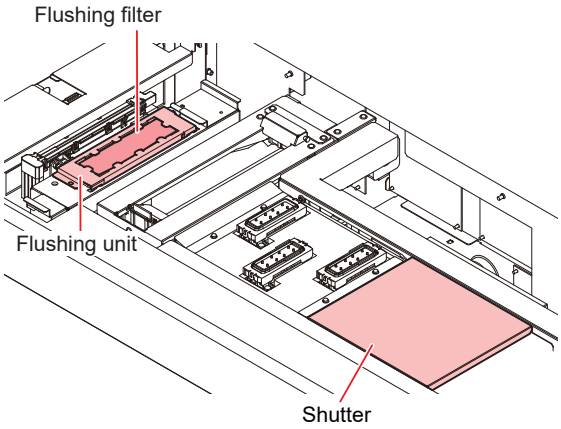

Important!

- If the surface of the flushing filter has become fluff, wipe it using a clean stick soaked in washing liquid.
- If the dirt is severe or hardened, replace the flushing filter. Flushing Filter

6 Once the cleaning is complete, press the [ENTER] key.

- After the initial operation, the display returns to Step 1.

5. Maintenance Every One or Two Weeks

Replacing Carriage Filters

Replace the filters once every 1 or 2 weeks.

1 **Move the carriage.**

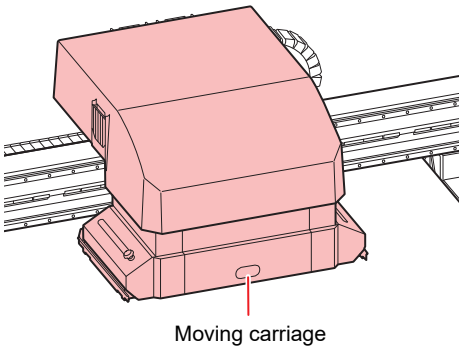

2 **Remove the used carriage filter.**

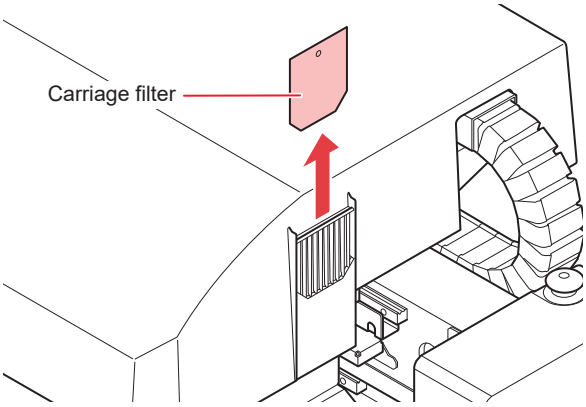

3 **Install the new carriage filter (PN : SPC-0851).**

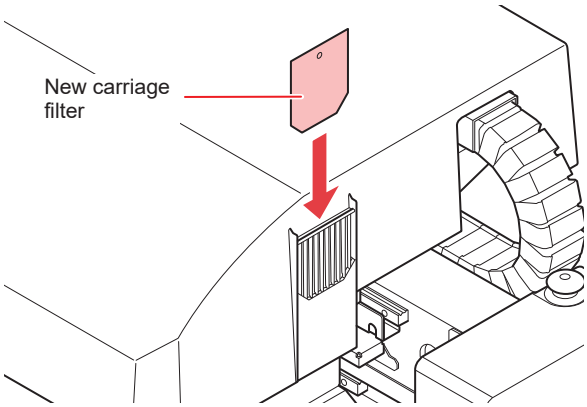

Important!

- Carriage filters are on the left, right, and back side of the carriage. Replace all the filters at same time.

4 **Once the replacement is complete, press the [ENTER] key.**

MBIS maintenance

Please replace the Bottle Wiping Filter (PN: SPC-0820) if it gets dirty.

1 **Remove the bottle wiping filter.**

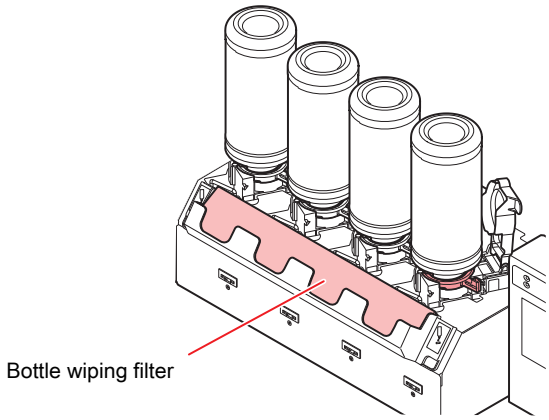

2 **Attach a new Bottle Wiping Filter (PN: SPC-0820).**

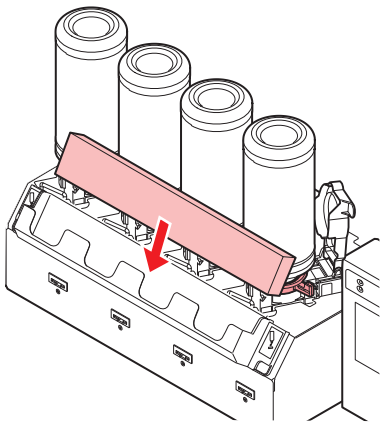

6. Maintenance for When Errors Occur

About Refilling the Cooling Water

To cool the LED UV unit, put anti freezing liquid mixed with water into the cooling water tank in the cooling device.

The water and anti freezing liquid (PN : SPC-0394) ratio should be 2 (water) to 1 (antifreeze).

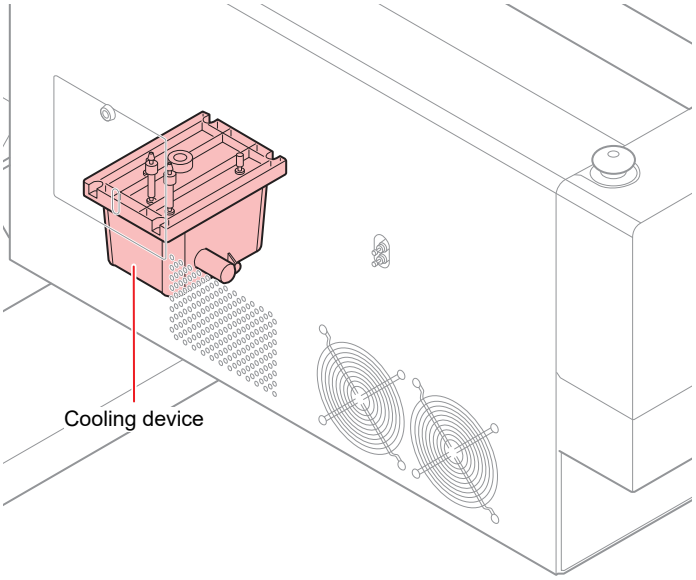

Notes on refilling

- The water and antifreeze solution ratio should be 2 (water) to 1 (antifreeze).
- If only water is put in the cooling water tank without adding the antifreeze liquid, the LED UV unit may malfunction due to freezing.
- If only antifreeze liquid is supplied to the cooling water tank without water, the machine will not work properly and errors may occur.
- If you notice frequent water shortage in the cooling water tank, contact your local distributor, or our sales office or call center.

- Dispose of the wastewater mixed with antifreeze pursuant to the regulations of your region.

Important!

- Antifreeze mixture precautions
  (1) Be sure to use water that satisfies the following conditions.
    - Calcium content: Not exceeding 10 mg/L (1 mg/100 ml)
    - Hardness: Not exceeding 60 mg/L
    - Distilled or purified water

  (2) Do not use antifreeze mixture that has been prepared far in advance.

  (3) Any excess antifreeze mixture must be used within one week. Filling the machine with antifreeze mixture that has been prepared more than one week in advance may lead to a malfunction.

Precautions for handling antifreeze liquid

- Always use an anti freezing liquid recommended by Mimaki. The cooling device may malfunction if any other product is used. (Supplied antifreeze liquid: 1000 cc x 1)
- Do not touch the antifreeze liquid directly. If you accidentally touch the antifreeze liquid, wash it off immediately with soap and water. If you get antifreeze liquid in your eyes, wash your eyes immediately with plenty of water and consult a physician.
- Store the antifreeze liquid in a cold and dark place.
- Keep the antifreeze liquid out of reach of children.
- Entrust the disposal of the antifreeze liquid you no longer need to an industrial waste disposal contractor and clarify its contents.
- Be sure to read the Safety Data Sheet (SDS) before using antifreeze liquid.

- When handling the anti freezing liquid, be sure to wear the included safety glasses and gloves.

- Prepare a tank with a cap for moving the waste water from the cooling water tank.
- The following error message is displayed when water in the cooling water tank is low. In this case, replace the water in the same way as shown in Refilling the Coolant.

```
<LOCAL>
WATER LACK
```

Refilling the Coolant

If the error suggesting lack of water occurs, refill the coolant. Approximately 500 cc of refill is required to fill the tank to its capacity.

Important!

- If the tank is not refilled with coolant for a week after the error message suggesting the lack of water, the error display changes to "REFILL WATER". You cannot switch to REMOTE mode while this error is on display. Refill the coolant immediately.

```
<LOCAL>
REFILL WATER
```

- A buzzer will continue to sound as long as "REFILL WATER" is displayed.
- If you continue to use the machine in the low water state, the error display will switch to "REFILL WATER" even for a LED-UV temperature error/warning, and it will not be possible to switch to REMOTE mode.

1 Remove the cover of the left rear surface of Y-bar.

- Remove the screw (1 place) indicated with a circle in the figure and remove the cover.

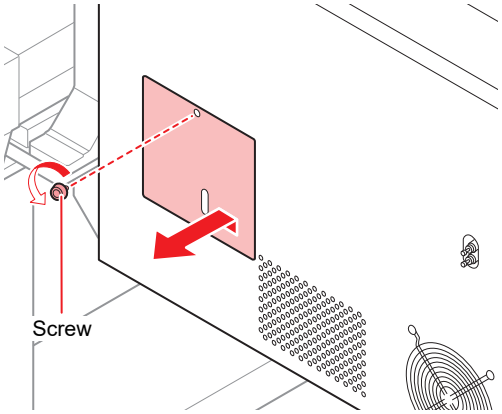

2 **Remove the water supply/drainage cap and air purge cap.**

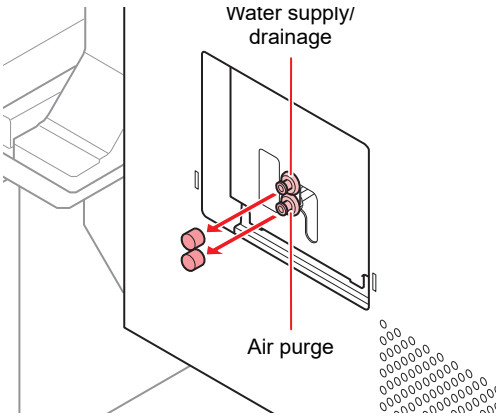

3 **Prepare mixed water solution (antifreeze liquid:1, water: 2) in the provided container and fill it into the provided syringe.**

4 **Fill the mixed water solution until the buzzer sound stops.**

- Fill the mixed water solution through the water inlet using a syringe.
- Fill an additional 100 CC after the buzzer stops.

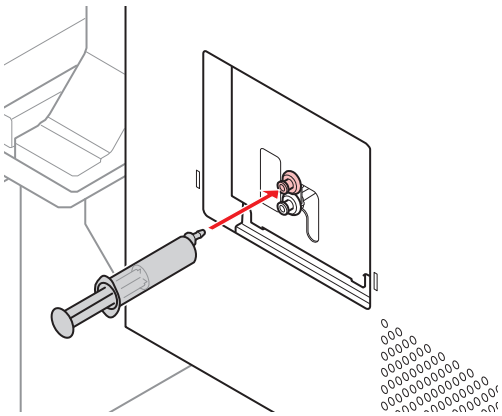

Important!
- The mixed water solution will leak from the tank if you inject it too much.

5 **Close the water inlet and air purge, and attach the cover of the left rear side of Y-bar.**

Replacing the wiper

The wiper is a consumable good. If the message on the right is displayed, replace the wiper as soon as possible.

Also, wipe the ink sticking to the lower surface of the slider.

```
<LOCAL>
REPLACE WIPER      [MNT]
```

Important! • Cleaning wipers are sold separately. Purchase one from your local distributor or our sales office.

1 When the message is displayed, press the [ENTER] key.

```
REPLACE WIPER
EXECUTE            [ENT]
```

2 Press the [ENTER] key.

- Carriage moves onto the table.

```
REPLACE WIPER
COMPLETED          [ENT]
```

Important! • [COMPLETED :ENT] is displayed on the screen until the replacement work is completed. Press the [ENTER] key after the work up to Step 4 is complete.

3 Remove the wiper

- Pull out the wiper by holding the protrusions at both the ends.

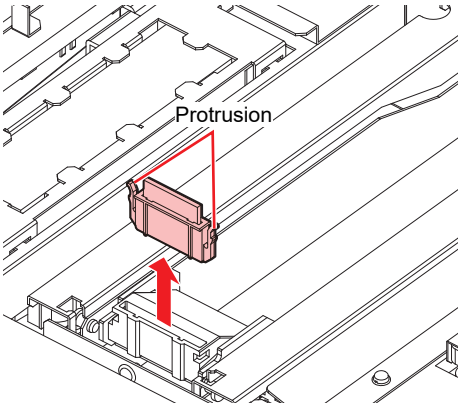

4 Insert a new wiper

- Insert the wiper by holding the protrusions at both the ends.

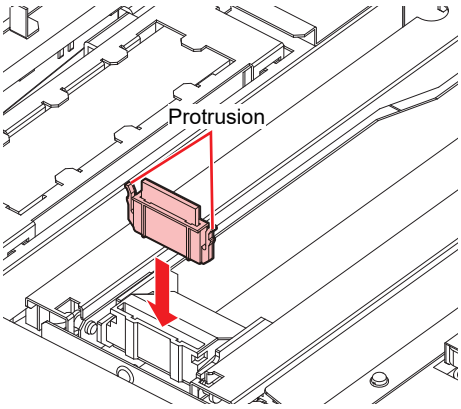

5 **Press the [ENTER] key.**

- After its initial operation, the machine returns to LOCAL.

```
*Being Initialized*
PLEASE WAIT
```

7. Maintenance as necessary

Cleaning LED UV Unit

Periodically clean the ink and dust stuck on the LED UV.

Important!

- Be careful not to damage the irradiation part on the bottom of the unit when cleaning the LED UV. If the dirt or shading on the irradiation part exceeds a certain limit, it may cause banding due to poor curing of the ink.

Ionizer Maintenance

Follow the instruction manual when performing ionizer (option) maintenance.

Bottle Cap Replacement

Replace approximately once a year. For information on the replacement procedure, refer to Replacing an Ink Bottle.

- Pay close attention to ventilation and be sure to wear safety glasses, gloves, and a mask when handling ink, maintenance liquid, waste ink, or other solutions used with the machine. Leaking ink may adhere to the skin or get into the eyes or mouth.

JFX200-2513EX, 1213EX Care and Maintenance

Aug, 2025

MIMAKI ENGINEERING CO.,LTD.
2182-3 Shigeno-otsu, Tomi-shi, Nagano 389-0512 JAPAN

D203433-31-06082025

© MIMAKI ENGINEERING CO., LTD.2019

KW
FW : 3.0