1.1m Round Dining Table Installation Manual

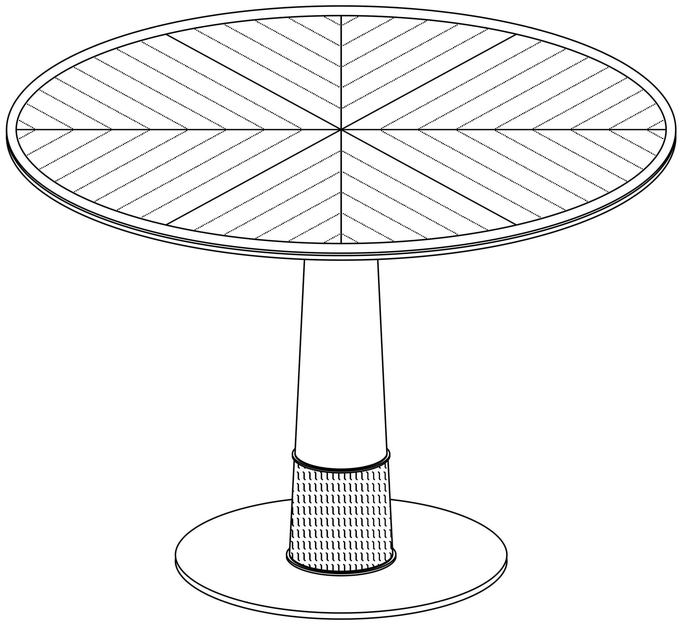

Hardware list

(Ax1)

Full tooth rod
（M8*710）

Splint screws
(M8*15)

(Bx11)

internal hexagon flat head screw
（M8*16）

(Cx1)

Allen key
(M5)

Parts List

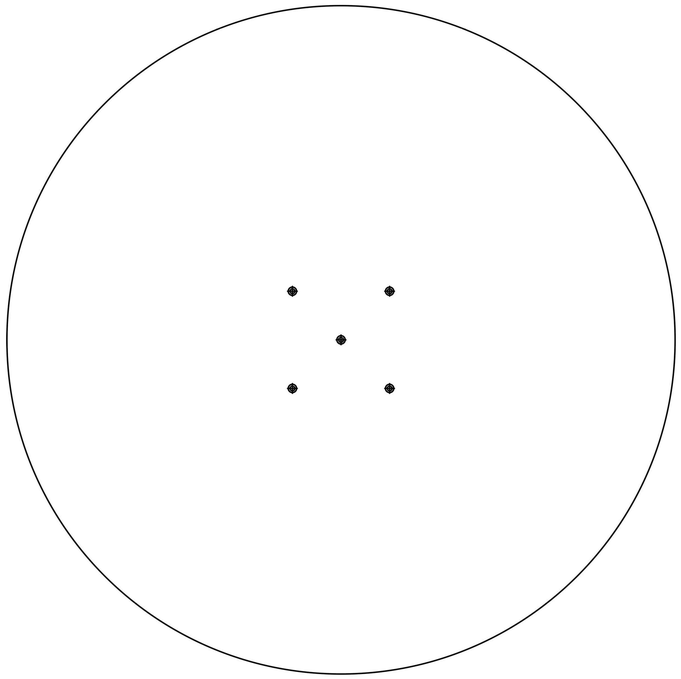

①

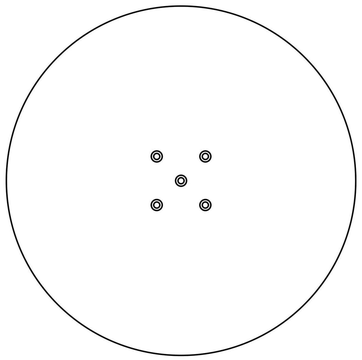

②

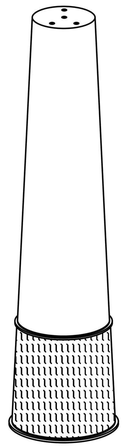

③

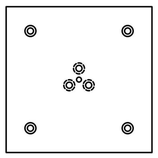

④

1 step:

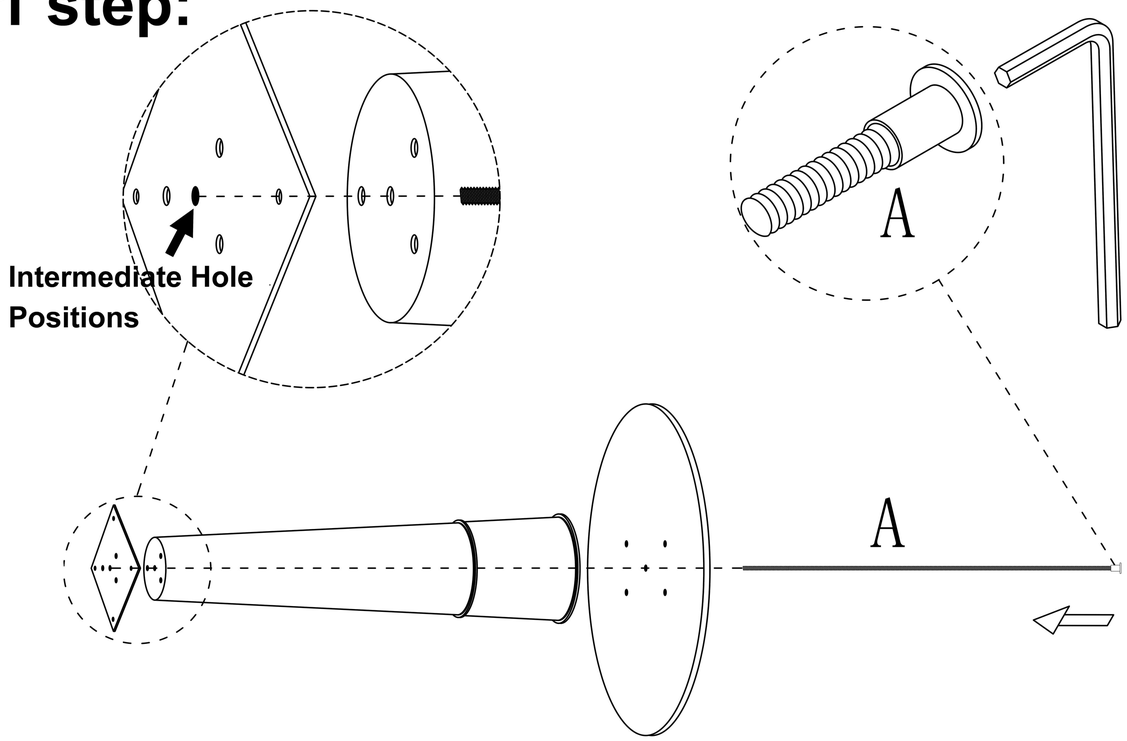

Align the long screw with the centre hole. Insert it straight into the top and link it to the hardware pallet (note: it does not need to be locked too tight).

2 step:

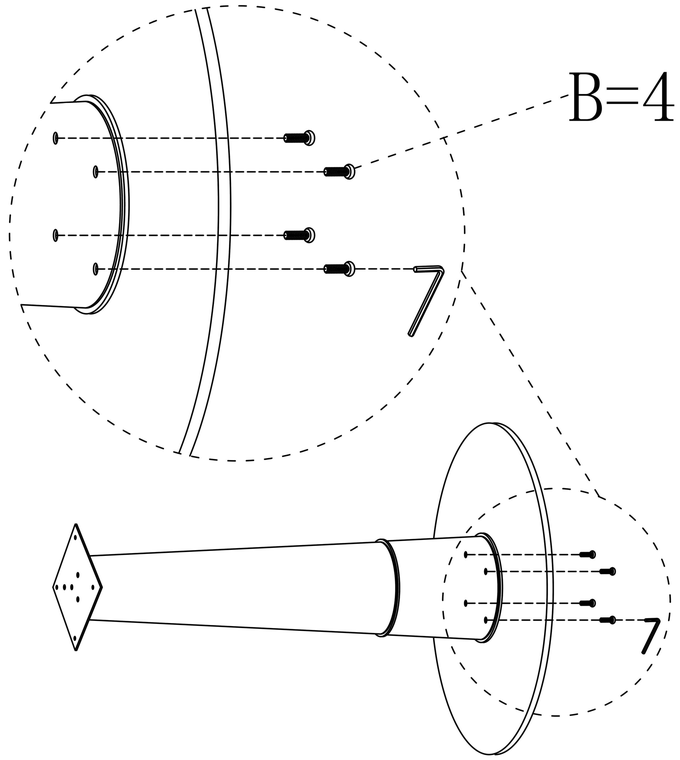

Locking the base to the column with B hardware

3 step:

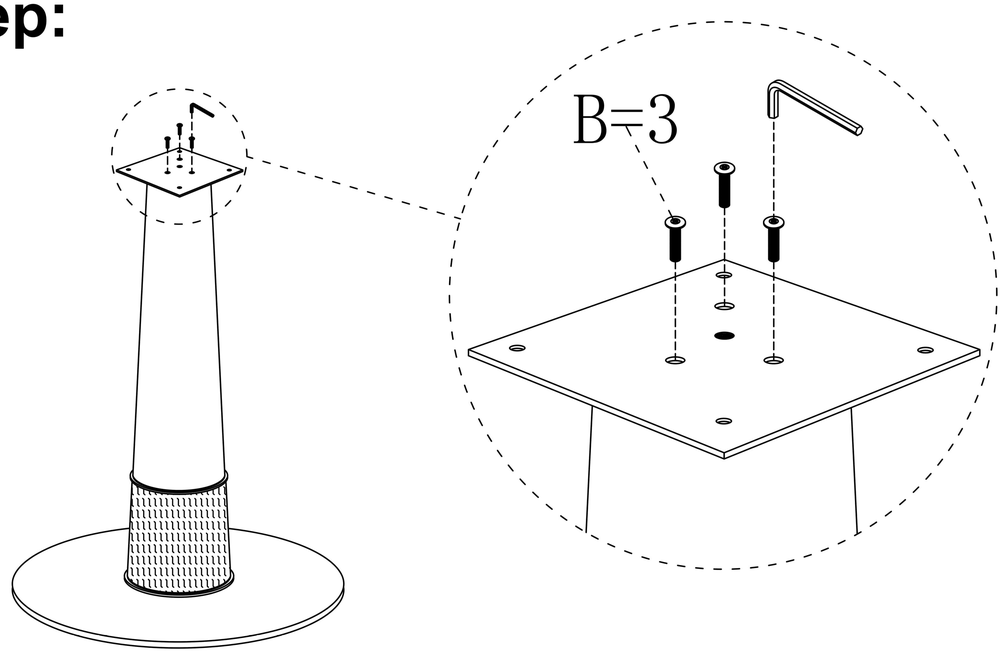

Use B hardware to lock the base and the column

4 step:

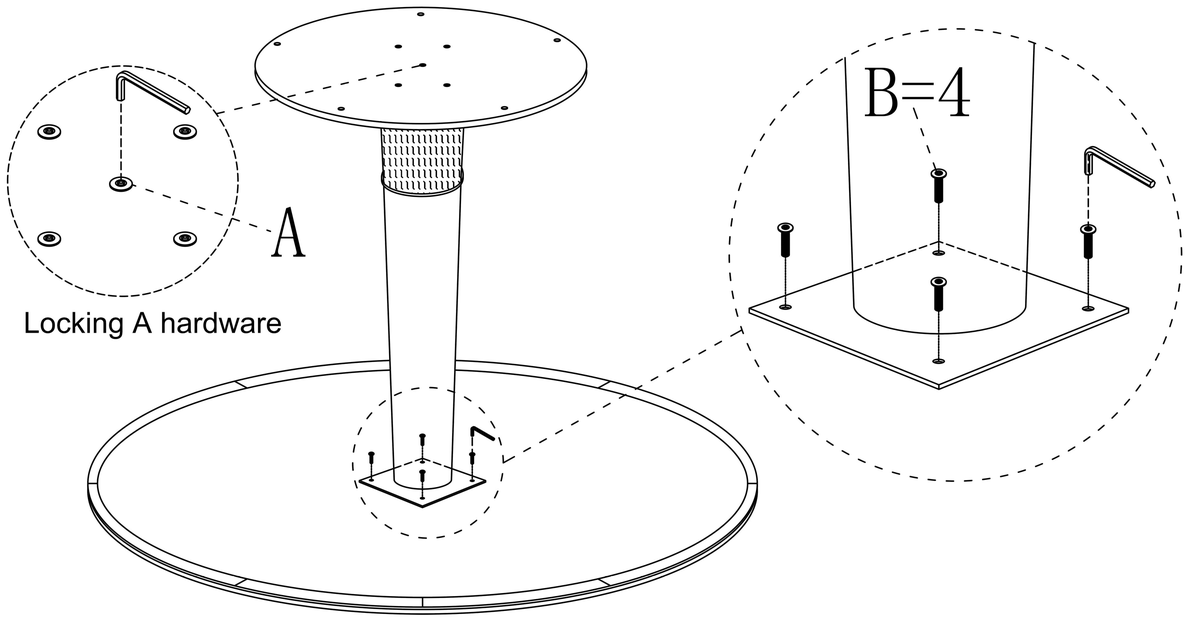

1.Flip the panel/post over and lock the pallet to the panel with B hardware

2.Lock the A hardware in the middle of the base with a spanner. Just straighten the table.