LIONHEART
- FOUNDRY -

LF-SUPERTOP USER MANUAL

Laney™

CONTENTS

INTRODUCTION 2
FEATURES 3
CONTROLS 4
1. FRONT PANEL 4
2. BACK PANEL 6
HOW TO CONNECT THE LF-SUPERTOP 7
3. LOUDSPEAKER CONNECTION 7
4. FX LOOP 7
5. USING THE DI OUT 8
6. AUX IN AND HEADPHONES OUT 9
7. FOOTSWITCH CONNECTIONS 9
EXAMPLE SETTINGS 10
1. CLEAN 10
2. PUSHED CLEAN 10
3. LEAD 10
4. RHYTHM 10
5. FULL ON 10
SPECIFICATIONS 11
DIMENSIONS (in mm) 12
BLOCK DIAGRAM 13
SAFETY AND WARNINGS 14

INTRODUCTION

The LF-SUPERTOP is a pro spec dual channel all analogue 120-Watt guitar head, packed full of additional features. This powerhouse is built to deliver your bold and unmistakable presence, whether in the studio or live, the LIONHEART FOUNDRY LF-SUPERTOP is your partner in making every note heard loud and clear.

The LF-SUPERTOP meticulously developed and proudly crafted by our Black Country Customs team, in the UK, gives you ample clean headroom, everyone loves the clean tones of the tube LIONHEARTs, so we wanted to preserve that, whilst adding the potential for very hot lead tones too.

The starting point was mapping the complete all-tube topology of our award-winning LIONHEART range into this analogue amp. It's not just about mimicking specific tones like some of the modeller amp products out there but replicating the truly dynamic interactive feel and touch sensitivity that makes a great tube amp so expressive and addictive to play.

The critical sections like the tone stack, EQ circuits, and gain stage were faithfully converted using discrete analogue components precisely tuned to match the response characteristics.

Not only does it deliver the same pristine clean, warm overdrive and wide tonal palette of the tube driven LIONHEARTS, it boasts built-in FX too.

Vintage Tremolo - Our exclusive built-in tremolo effect pays homage to mid 1960's tremolo circuits found in classic vintage tube amps. Whether you're looking for that 'far out' surf sound, or a brooding, pulsating Portishead vibe. You'll definitely fall in love with this classy and alternative effect, we certainly have!

Spiral Chorus and Modulation - Based on our much-revered Black Country Customs Spiral Array Chorus stomp box – as used by Andy Timmons - the Spiral Chorus and Modulation offers up a vibe that does everything from subtle chorus right through to "down a drainpipe" flanging.

Secret Path Spring Reverb - It wouldn't be a LIONHEART without a beautiful reverb. So, we've included the Black Country Customs Secret Path Spring reverb algorithm. This stunning reverb has been winning hearts all over the World since we released the pedal in 2019 and is now a firm favourite among artists such as Lari Basilio, Tom Quayle, and many others.

It's all about the BOOST - The LF-SUPERTOP features a built-in, footswitchable BOOST. This provides almost a 3rd channel, allowing you to push a clean tone into slight overdrive, or an overdriven tone into a searing lead.

In addition to a passive 3 band tone stack, it wouldn't be a LIONHEART without an overall tone control. This acts like the tone control on a guitar, allowing for quick and powerful changes to your overall EQ…But that's not all.

We've enhanced the LIONHEART bright switch option by adding an additional 'Dark' setting on the Channel 2 giving you even greater control over your tone.

Dial the output section back from MAX output to less than 1W to keep all of the tone, making it great for practice at home.

High-quality effects loop for connecting your favourite post pre-amp FX pedals/units, just like the Tube driven LIONHEARTS.

We've also included our new Impulse Response technology, LA·IR, Laney Advance Impulse Response technology. We used remarkably high resolution 56-bit FIR filters to ensure all the complex dynamics, low-end punch, and chiselled highs translated with zero compromises.

We've carefully captured our legendary Laney GS112 and GS412 cabinets, in-house, to ensure they perfectly match the Foundry LIONHEARTs, and the LA·IR offers them up to you at the flick of a switch. These bespoke Built-In IRs allow you to send the perfect cabinet output option direct to the PA without the need to mic, all via the XLR DI OUT.

This makes the LF-SUPERTOP an ideal recording amp too, of course.

At just 7.3Kg, (16.1 lbs), the LF-SUPERTOP is a compact and portable head packing a whopping 120 Watts. More than capable for live performance.

Simple, straight ahead GREAT TONE, no need to read the manual, no messing around with an APP, no squinting at a screen. Just time spent doing what you love... playing guitar!

The LF-SUPERTOP, everything you need. Nothing you don't

For more information about the complete range of Laney amplifiers please visit our website www.laney.co.uk

FEATURES

- High and Low power modes (120W RMS or Low Power <1W bedroom mode).
- Built in foot-switchable Pre-Boost with level.
- Two Independent Channels with foot-switchable control designed from the ground up to replicate the Tone AND feel of the Lionheart tube series.
- Clean Channel with Bright Switch.
- Drive Channel with Gain, Volume and switchable Bright, Natural and Dark voicing.
- 3 Band passive tone stack and Tone control.
- Digital SECRETPATH Spring Reverb with foot-switchable control.
- Tremolo and Chorus, with rate and depth controls. (foot-switchable).
- LA·IR High Quality Digital IR emulated balanced XLR Out with selectable 1x12 or 4x12 IR and ground lift switch.
- 6.3mm FX Loop (FX Send doubles as an unemulated line out).
- 3.5mm Stereo Aux In and 3.5mm Stereo Headphone Output (With Cabinet Emulation).

CONTROLS

1. FRONT PANEL

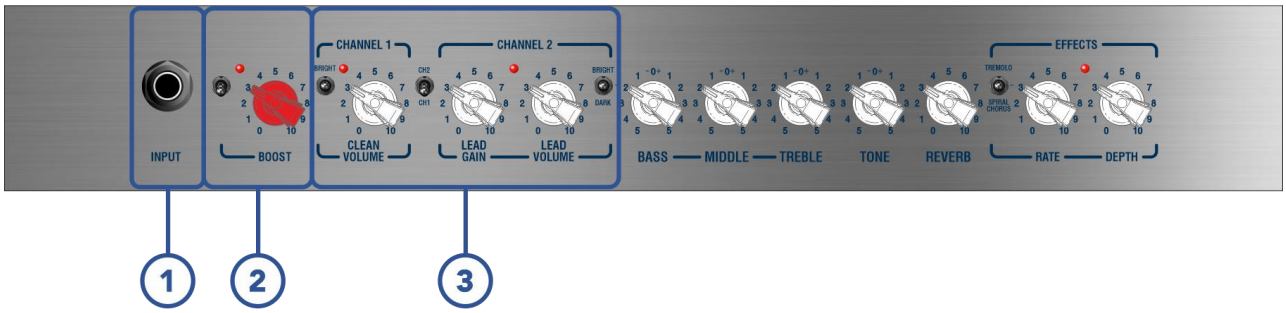

1. INPUT SOCKET
6.3mm jack socket for your Guitar audio signal input.

2. BOOST CONTROL
Pre-channel boost control with on/off switch. The LED will illuminate with the toggle in the up position and the Boost is active. Switching is also achievable via the rear panel Remote socket and footswitch.

3. CHANNEL 1 + 2 CONTROLS

CHANNEL 1 SETTINGS
CLEAN VOLUME control for channel 1 to set the overall level of the channel and achieve the desired signal level balance with channel 2.

TONE SWITCH allows for control over the frequency response of channel 1.

- **BRIGHT** - (Up) – extends the high frequencies and slightly dulls the low-end.
- **OFF** - (Down) - No change.

CHANNEL SELECT
Use the toggle switch to set the active channel, with Up for CH2 and Down for CH1. The channels can also be switched remotely via a footswitch.

CHANNEL 2 SETTINGS
LEAD GAIN control independently increases the preamp gain of channel 2. Adds more distortion to your signal.

LEAD VOLUME control for channel 2, once the gain is set, use this to control the overall level of the channel.

TONE SWITCH allows for control over the frequency response of channel 2.

- **BRIGHT** - (Up) – extends the high frequencies and slightly dulls the low-end.
- **OFF -** (Centre) – No change.
- **DARK** - (Down) – boosts the low-end frequencies adding some warmth to the tone whilst reducing the power of the high frequencies.

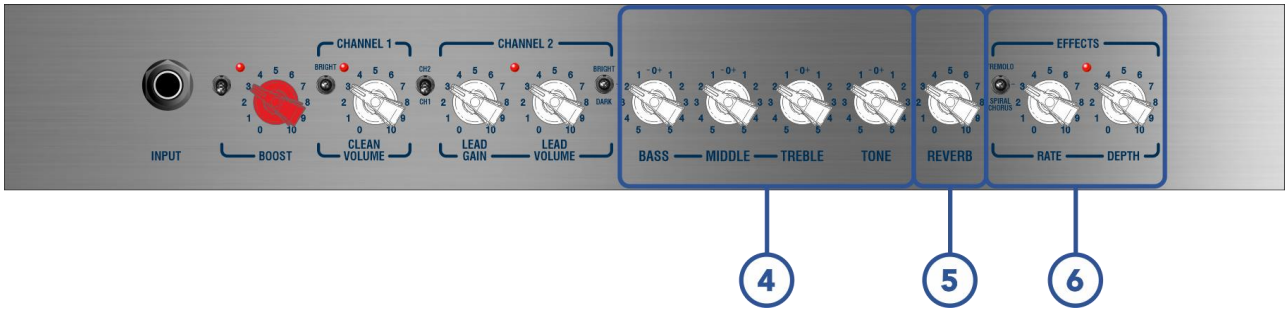

4. EQ TONE STACK
3 tone EQ stack to tweak the bass, middle and treble. Passive controls that always sound musical at any setting with an additional Tone control to tweak the top end response of your signal.

5. REVERB
Our built-in studio quality spring line reverb effect based on our award-winning Secret Path pedal. Reverb is evocative of space – a note contains pitch, but reverb contains place and fills out the sound. Turn the knob clockwise to increase the strength of the effect. The Reverb can also be activated/deactivated via footswitch.

6. EFFECTS CONTROLS
Choose between BCC Vintage Tremolo and our BCC Spiral Chorus and Modulation effects. Use the rate and depth to vary the selected effect. The LED above the Rate and Depth controls will illuminate when either of the effects are active, and again remote access is available via footswitch control.

2. BACK PANEL

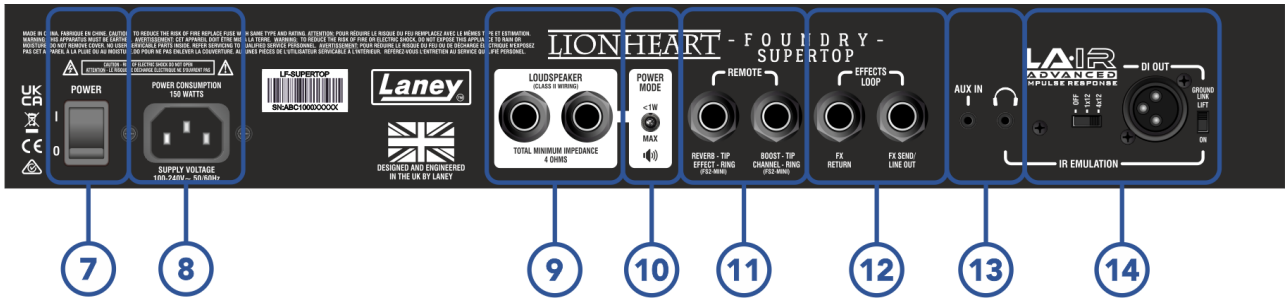

7. POWER SWITCH
Main power switch for the unit. The power switch provides complete power isolation in the off position.

8. POWER SOCKET
A universal power input provided via an IEC C14 socket. An AC supply from 100V-240V~ 50/60Hz is acceptable and voltage selection or adjustment is not required.

9. LOUDSPEAKER SOCKETS
Connect to your passive guitar speaker cabinet. A Laney LF212 or LF412 is recommended. Two sockets are provided to run multiple cabinets at the same time. A single 4 Ohm, 8 Ohm or 16 Ohm cabinet can be used, or multiple cabinets having a combined impedance of 4 Ohms or more, ie two 8 Ohm cabinets.

10. AMP POWER CONTROL
Switch the power output of the amplifier between full power and <1W for quiet playing.

11. REMOTE SWITCH SOCKETS
Two footswitch sockets to control reverb, effect, boost and channel select.
The left socket allows the user to switch the reverb and effects. The right socket allows the user to switch the onboard boost and channel. For the remote to work, the boost, reverb and effects must be on, and the channel toggle switch set to CH2.
Laney FS2-MINI footswitches are recommended (not included) but most latching type should also work.

12. FX LOOP
FX return and send to connect to your effects pedals. The FX send can also be used as a standard line level output.

13. AUX IN + HEADPHONES OUT
3.5mm aux input socket to add a backing track to your mix.
3.5mm headphones socket for silent playing – will mute the amplifier with a jack connected.

14. DI OUT
This balanced XLR DI out is equipped with LA·IR functionality. You can select between no LA·IR, or digital IR's of our award winning GS112 and GS412 cabinets. There is also a ground lift switch to potentially resolve ground hum issues.

HOW TO CONNECT THE LF-SUPERTOP

3. LOUDSPEAKER CONNECTION

Simply connect your guitar to the input socket via a 6.3mm jack and you're ready to play.

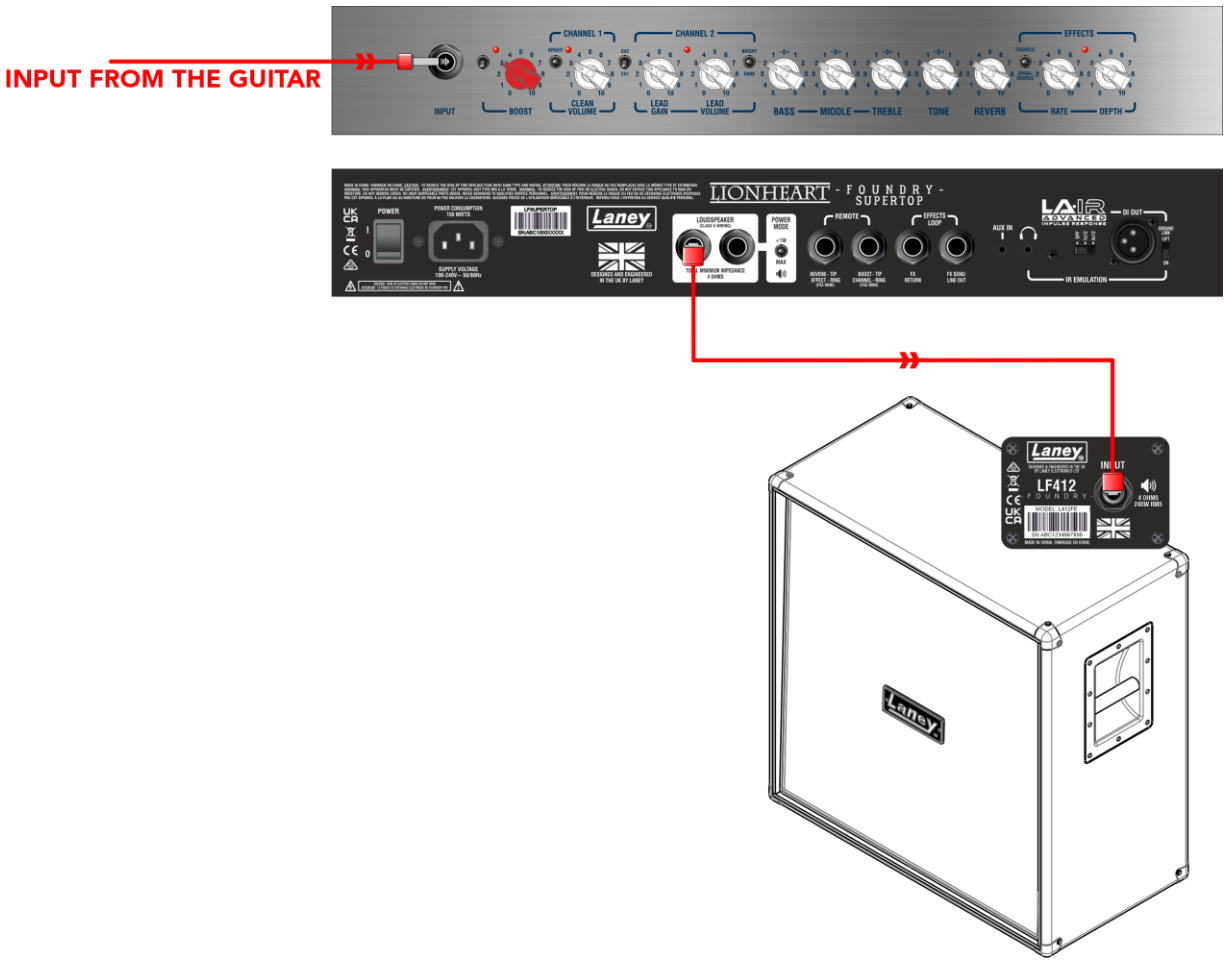

4. FX LOOP

To incorporate your effects pedalboard, plug the input and output to the FX send/return sockets respectively.

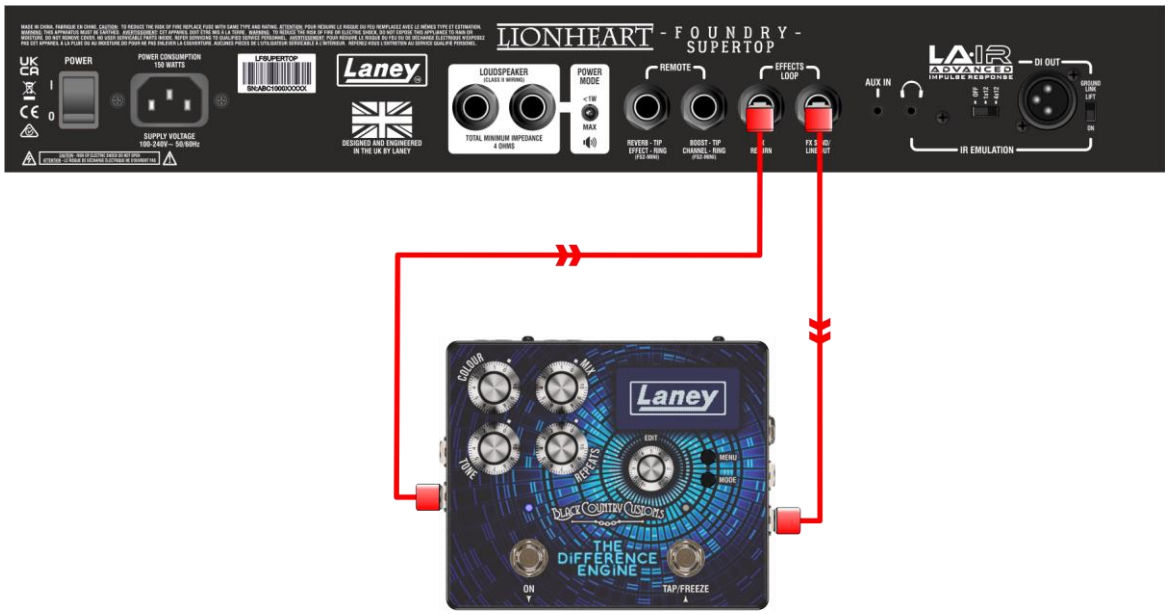

5. USING THE DI OUT

The high-quality speaker emulated DI out, with IRs preloaded, can be connected to any balanced/unbalanced line level input device such as a PA or audio interface to a DAW. Toggle the cabinet emulation off should you want to use your own.

Please note that it's ok to use the amplifier with speaker outputs disconnected. No damage will occur.

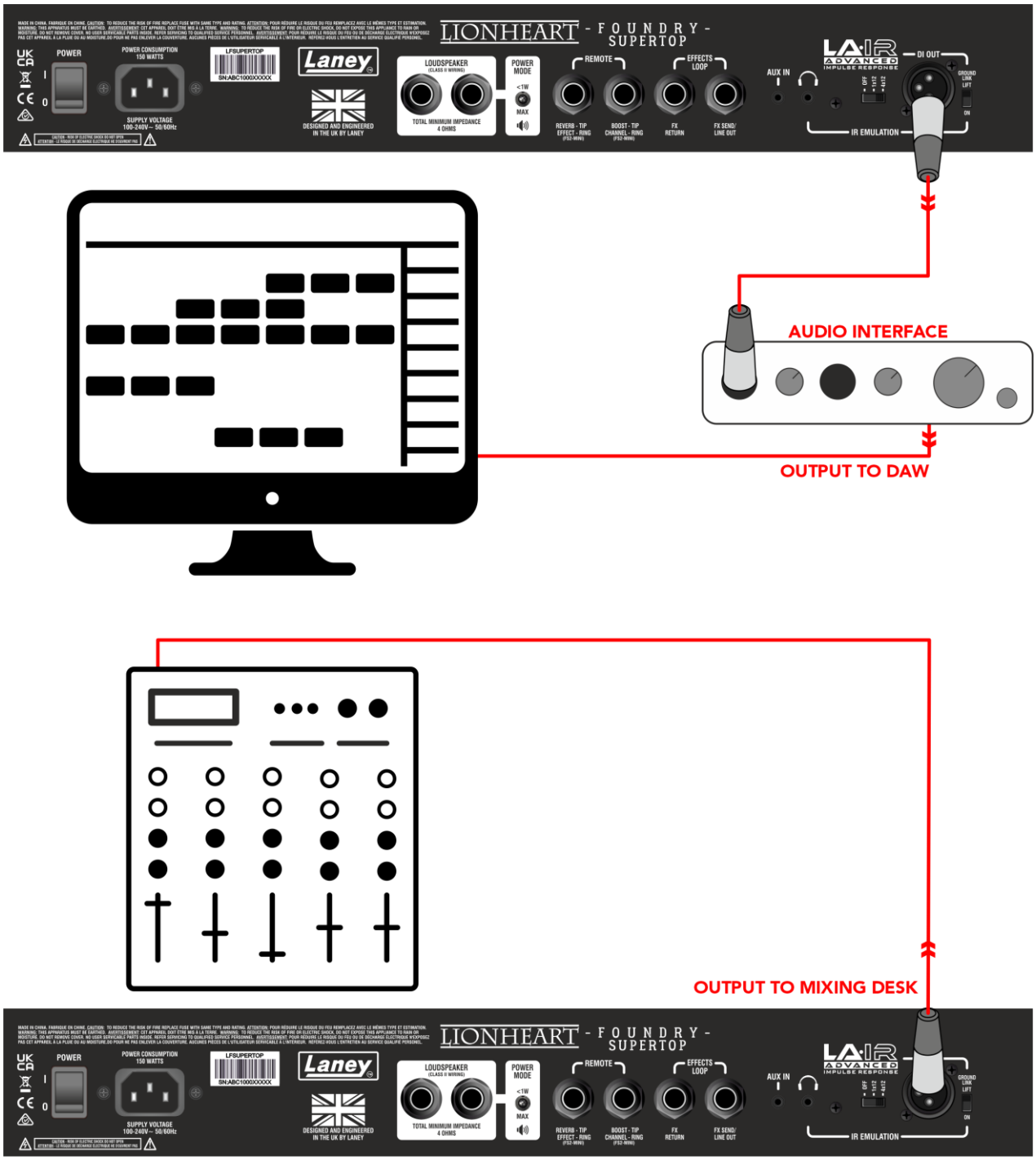

6. AUX IN AND HEADPHONES OUT

Connect your backing track via the 3.5mm aux in from any media player device such as a mobile phone. This will play out of the onboard loudspeaker along with your guitar track. Alternatively, for silent practise, plug in a pair of headphones to the 3.5mm phones out socket to have your guitar and backing track play through them with the onboard loudspeaker muted.

The phones out also includes cabinet emulation, following the IR emulation switch setting.

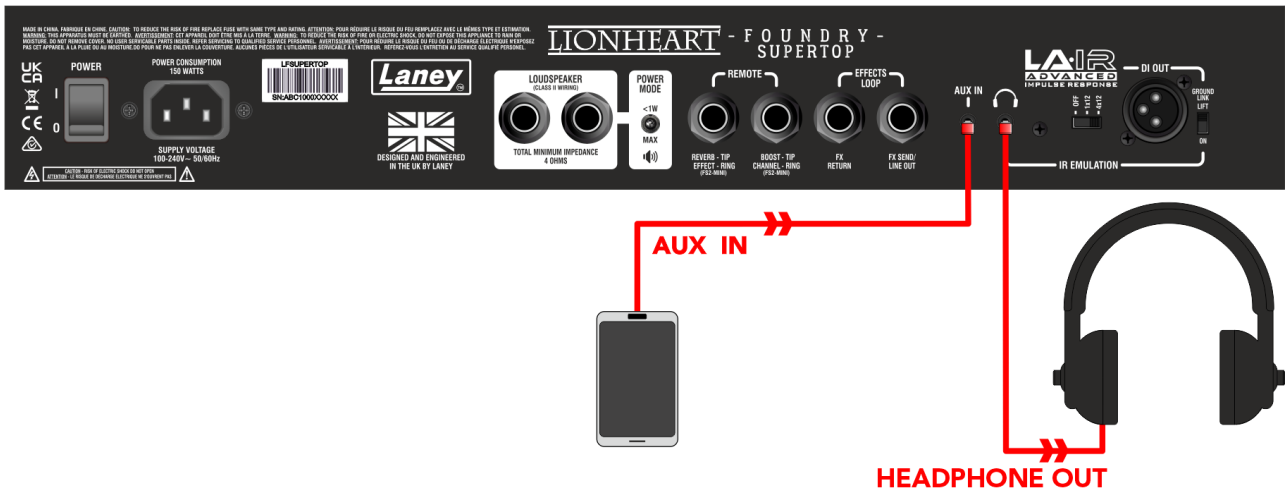

7. FOOTSWITCH CONNECTIONS

The remote sockets on the LF-SUPERTOP can be connected to two FS2 Minis (not included) to allow for remote control of the reverb, effect select, boost and channel select.

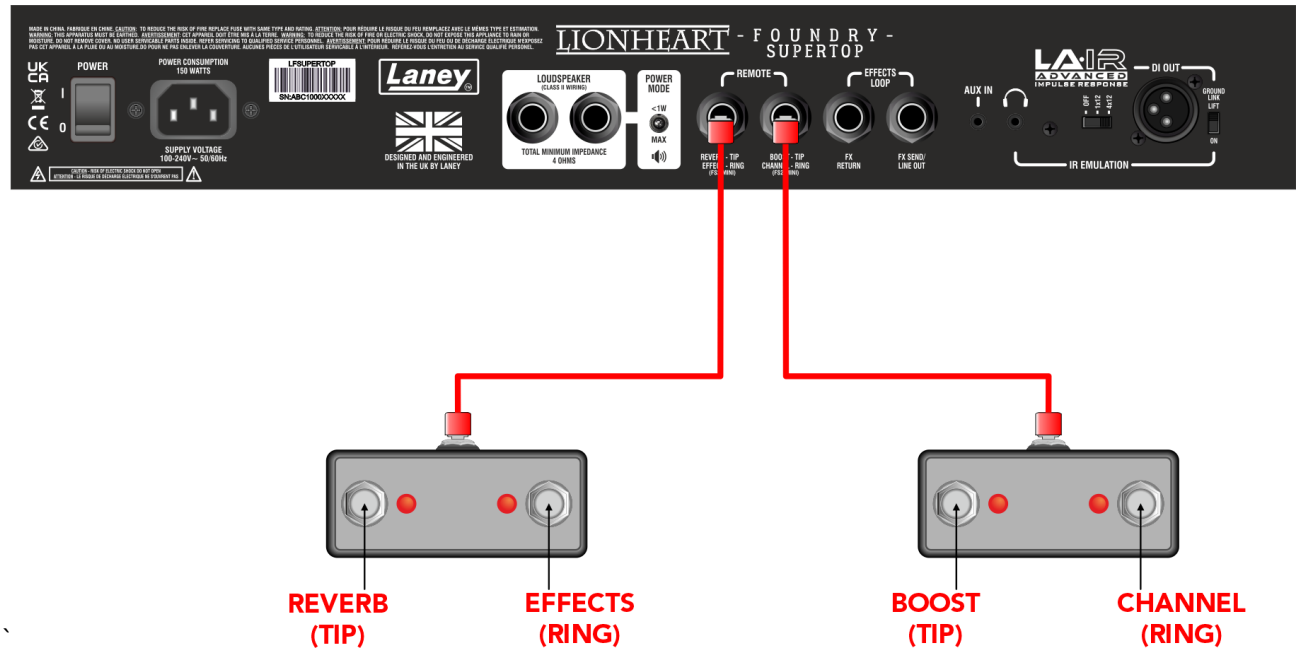

EXAMPLE SETTINGS

While the EQ on the LF-SUPERTOP is designed to always sound musical, here are a few starters to help you find some familiar tones:

1. CLEAN

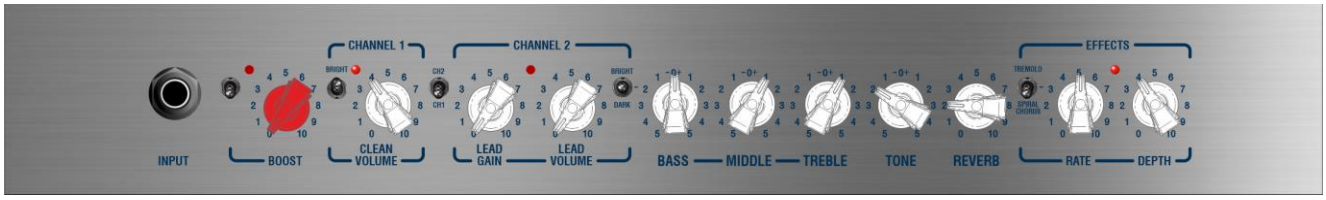

2. PUSHED CLEAN

3. LEAD

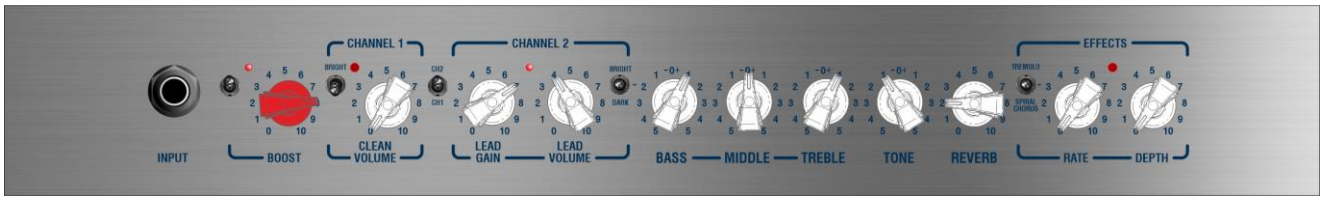

4. RHYTHM

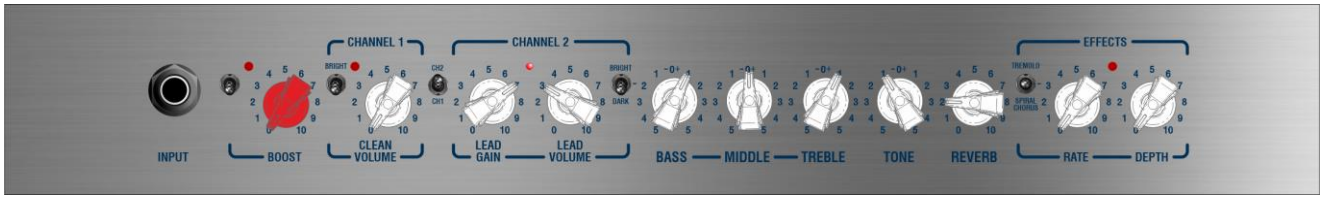

5. FULL ON

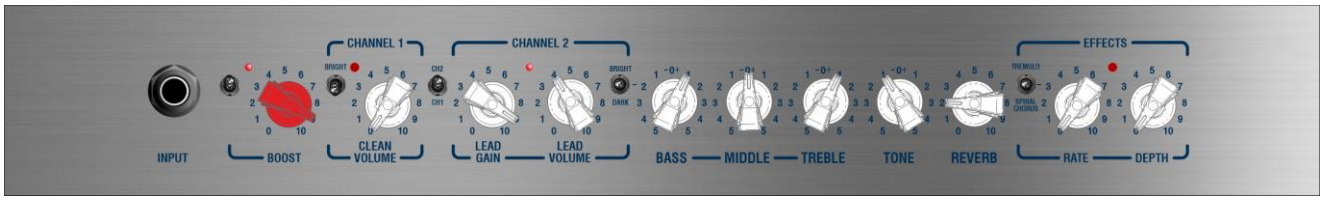

SPECIFICATIONS

Model No	*LF-SUPERTOP*
Name	*Lionheart Foundry SUPERTOP*
Type	*Guitar Amplifier Head*
Input Impedance	*1MΩ*
Amplifier Power	*120W RMS or Low Power <1W bedroom mode)*
Channels	*Clean and Drive (Footswitchable)*
EQ	*Bass, Middle Treble (Passive tone stack) Overall Tone Control, plus Bright switch (Clean Channel) and Tone character Switch (Drive Channel)*
Effects	*Digital Springline Reverb (Footswitchable). Tremolo and Chorus, with rate and depth controls (Footswitchable), External FX Loop*
Controls	*Pre-Boost, Clean Volume, Clean Bright Switch, Channel Switch, Drive Gain, Drive Volume, Drive Tone Character (Normal, Bright, Dark), Bass, Middle, Treble, Reverb, Tremolo or Chorus Switch, Rate, Depth.*
Indicators	*Leds for Boost, Channel 1, Channel 2, and Modulation Effects.*
Inputs	*6.3mm (1/4") Mono Instrument Input Jack, 6,3mm FX Return jack, 3.5mm stereo aux in jack*
Outputs	*Twin 6.3mm Loudspeaker Jack outputs. 6.3mm FX Send (Doubles as Line Out), 3.5mm stereo headphone jack, Balanced Male XLR DI out with LA.IR Speaker Emulated Digital Impulse Response with high quality 1x12 and 4x12 options.*
Power Supply	*Internal SMPSU 100-240V~ Universal Voltage 50/60Hz. IEC C14 Inlet*
Power Consumption	*150W*
Main Construction Material	*Robust composite wood construction (15mm MDF)*
Unit dimensions (HWD)	*229 x 480 x 220mm, (9" x 18.9" x 8.7")*
Unit weight	*7.3Kg, (16.1 lbs)*
Carton dimensions (HWD)	*295 x 625 x 285mm, (11.6" x 24.6" x 11.2"), 0.053 M3*
Packed Weight	*9.3Kg, (20.5 lbs)*
EAN Code (Single)	*5060109459128*

In the interest of continued development, Laney reserves the right to amend product specification without prior notification.

DIMENSIONS (in mm)

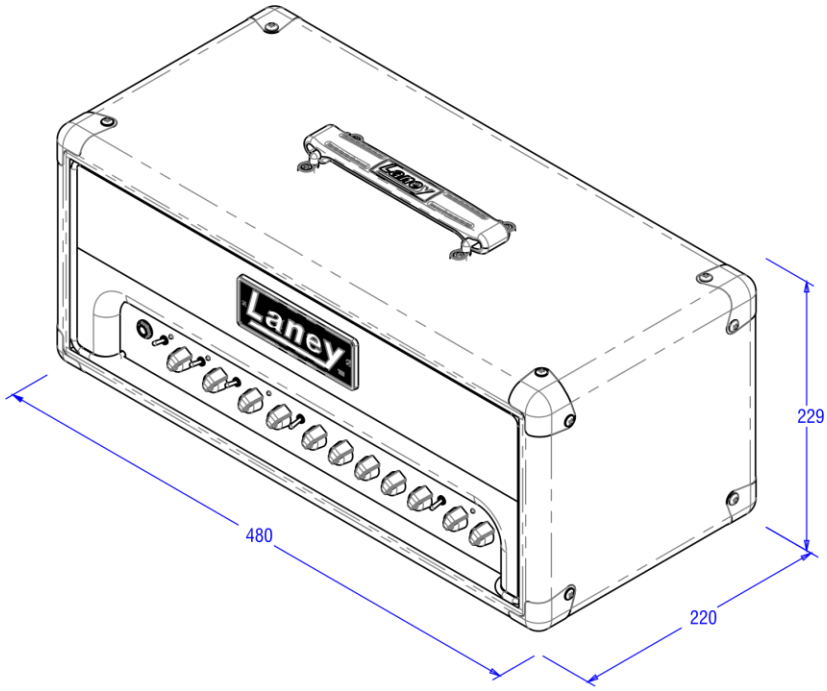

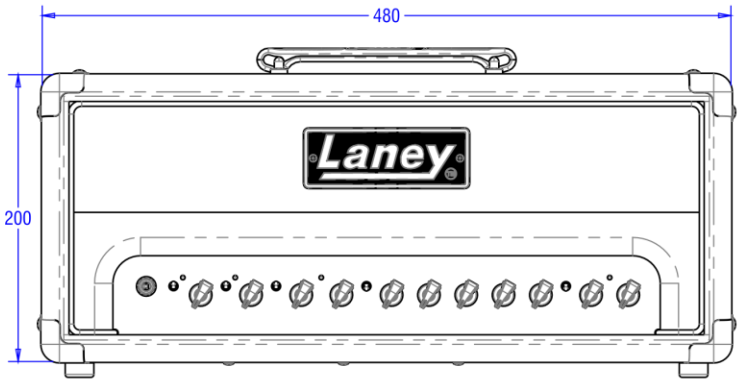

FRONT

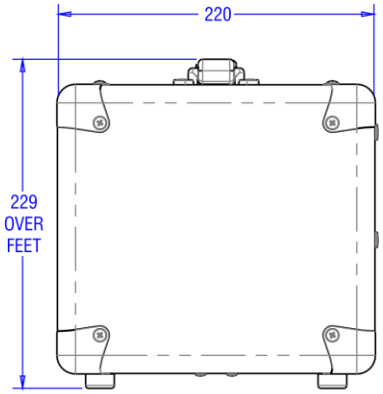

RIGHT

BLOCK DIAGRAM

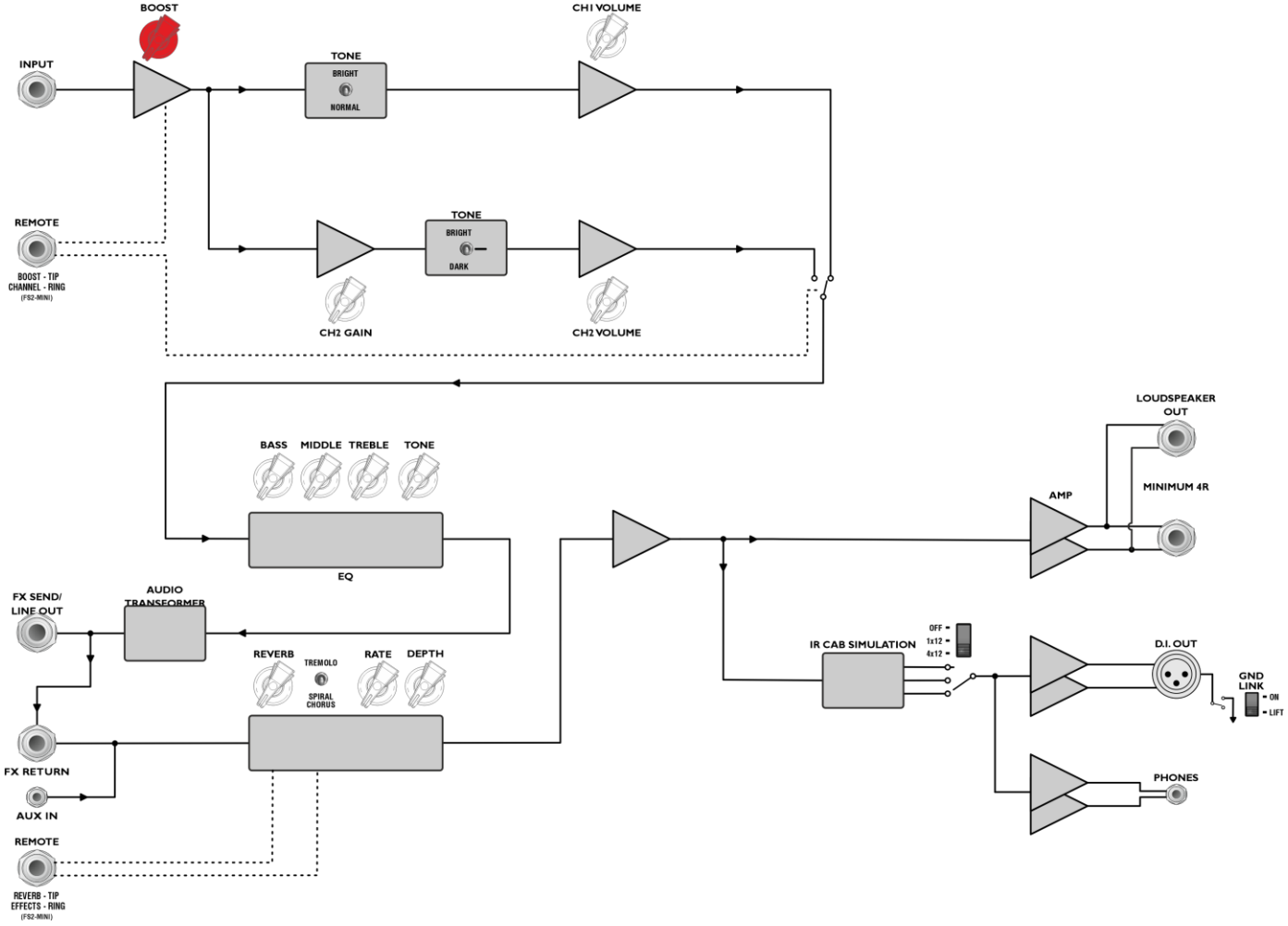

MANUFACTURER: HEADSTOCK DISTRIBUTION LTD.
STEELPARK ROAD, COOMBS WOOD BUSINESS PARK
WEST, HALESOWEN, B62 8HD, UK

SAFETY AND WARNINGS

To take full advantage of your new product and enjoy long and trouble-free performance, please read this owner's manual carefully, and keep it in a safe place for future reference.

1) Unpacking: On unpacking your product, please check carefully for any signs of damage that may have occurred whilst in transit from the Laney factory to your dealer. In the unlikely event that there has been damage, please re-pack your unit in its original carton and consult your dealer. We strongly advise you to keep your original transit carton, since in the unlikely event that your unit should develop a fault, you will be able to return it to you dealer for rectification securely packed.
2) Amplifier Connection: To avoid damage, generally it is advisable to establish and follow a pattern for turning on and off your system. With all system parts connected, turn on source equipment, mixers, effects processors etc, BEFORE turning on your amplifier. Many products have large transient surges at turn on and off which can cause damage to your speakers. By turning on your amplifier LAST and making sure its level control is set to a minimum, any transients from other equipment should not reach your loudspeakers. Wait till all system parts have stabilised, usually a couple of seconds. Similarly, when turning off your system always turn down the level controls on your amplifier and then turn off its power before turning off other equipment.
3) Cables: Never use shielded or microphone cable for any speaker connections as this will not be substantial enough to handle the amplifier load and could cause damage to your complete system. Use good quality shielded cables everywhere else.
4) Servicing: The user should not attempt to service these products. Refer all servicing to qualified service personnel.
5) Heed all warnings.
6) Follow all instructions.
7) Do not use this apparatus near water.
8) Clean only with a dry cloth.
9) Do not block any of the ventilation openings. Install in accordance with manufacturer's instructions.
10) Do not install near any heat sources such as radiators, heat registers, stoves, or other apparatus (including amplifiers) that produce heat.
11) An apparatus with Class I construction shall be connected to a mains socket outlet with a protective connection. Do not defeat the safety purpose of the polarized or grounding-type plug. A polarized plug has two blades with one wider than the other. A grounding type plug has two blades and a third grounding prong. The wide blade or third prong is provided for your safety. If the provided plug does not fit into your outlet, consult an electrician for replacement of the obsolete outlet.
12) Protect the power cord from being walked on or pinched, particularly at plugs, convenience receptacles, and the point they exit from the apparatus.
13) Only use attachments/accessories provided by the manufacturer.
14) Use only with a cart, stand, tripod, bracket, or table specified by the manufacturer, or sold with the apparatus. When a cart is used, use caution when moving the cart/apparatus combination to avoid injury from tip-over.
15) The mains plug or appliance coupler is used as the disconnect device and shall remain readily operable. The user should allow easy access to any mains plug, mains coupler and mains switch used in conjunction with this unit thus making it readily operable. Unplug this apparatus during lightning storms or when unused for long periods of time.
16) Refer all servicing to qualified service personnel. Servicing is required when the apparatus has been damaged in any way, such as when power-supply cord or plug is damaged, liquid has been spilled or objects have fallen into the apparatus, the apparatus has been exposed to rain or moisture, does not operate normally, or has been dropped.
17) Never break off the ground pin. Connect only to a power supply of the type marked on the unit adjacent to the power supply cord.
18) If this product is to be mounted in an equipment rack, rear support should be provided.
19) Note for UK only: If the colours of the wires in the mains lead of this unit do not correspond with the terminals in your plug, proceed as follows:
    - The wire that is coloured green and yellow must be connected to the terminal that is marked by the letter E, the earth symbol, coloured green or coloured green and yellow.
    - The wire that is coloured blue must be connected to the terminal that is marked with the letter N or the colour black.
    - The wire that is coloured brown must be connected to the terminal that is marked with the letter L or the colour red.
20) This electrical apparatus should not be exposed to dripping or splashing and care should be taken not to place objects containing liquids, such as vases, upon the apparatus.
21) Exposure to extremely high noise levels may cause a permanent hearing loss. Individuals vary considerably in susceptibility to noise-induced hearing loss, but nearly everyone will lose some hearing if exposed to sufficiently intense noise for a sufficient time. The U.S. Government's Occupational Safety and Health Administration (OSHA) has specified the following permissible noise level exposures: According to OSHA, any exposure more than the above permissible limits could result in some hearing loss. Earplugs or protectors to the ear canals or over the ears must be worn when operating this amplification system to prevent a permanent hearing loss, if exposure is more than the limits as set forth above. To ensure against potentially dangerous exposure to high sound pressure levels, it is recommended that all persons exposed to equipment capable of producing high sound pressure levels such as this amplification system be protected by hearing protectors while this unit is in operation.

Duration Per Day in Hours	Sound Level dBA, slow response
8	90
6	92
4	95
3	97
2	100
1 ½	102
1	105
½	110
¼ ou inférieur	115

22) If your appliance features a tilting mechanism or a kickback style cabinet, please use this design feature with caution. Due to the ease with which the amplifier can be moved between straight and tilted back positions, only use the amplifier on a level, stable surface. DO NOT operate the amplifier on a desk, table, shelf or otherwise unsuitable non-stable platform.
23) Symbols & nomenclature used on the product and in the product manuals, intended to alert the operator to areas where extra caution may be necessary, are as follows:

CAUTION:	Intended to alert the user to the presence of uninsulated 'Dangerous Voltage' within the products enclosure that may be sufficient to constitute a risk of electrical shock to persons. Ce symbole est utilisé pur indiquer a l'utilisateur de ce produit de tension non-isolée dangereuse pouvant être d'intensité suffisante pour constituer un risque de choc électrique. Este símbolo tiene el propósito de alertar al usuario de la presencia de '(voltaje) peligroso' que no tiene aislamiento dentro de la caja del producto que puede tener una magnitud suficiente como para constituir riesgo de corrientazo. Dieses Symbol soll den Anwender vor unisolierten gefährlichen Spannungen innerhalb des Gehäuses warnen, die von ausreichender Starke sind, um einen elektrischen Schlag verursachen zu können.
WARNING:	Intended to alert the user of the presence of important operating and maintenance (Servicing) instructions in the literature accompanying the product. Destiné à alerter l'utilisateur de la présence d'instructions importantes d'exploitation et de maintenance (entretien) dans la documentation accompagnant le produit. Este símbolo tiene el propósito de la alertar al usuario de las presencias de instrucciones importantes sobre la operación y mantenimiento en la literatura que viene con el producto. Dieses Symbol soll den Benutzer auf wichtige Instruktionen in der Bedienungsanleitung aufmerksam machen, die Handhabung und Wartung des Produkts betreffen.
CAUTION: ATTENTION : PRECAUCION: VORSICHT:	Risk of electrical shock - DO NOT OPEN. To reduce the risk of electrical shock, do not remove the cover. No user serviceable parts inside. Refer servicing to qualified personnel. Risques de choc électrique - NE PAS OUVIRIR. Afin de réduire le risque de choc électrique, ne pas enlever le couvercle. Il ne se trouve a l'intérieur aucune pièce pouvant être réparée par l'utilisateur. Confier l'entretien a un personnel qualifié. Riesgo de descarga eléctrica - NO ABRIR. Para reducir el riesgo de descarga eléctrica, no quite la cubierta. No hay piezas reparables por el usuario en el interior. Remita el servicio a personal calificado. Risiko - Elektrischer Schlag! Nicht offen! Um das Risiko eines elektrischen Schlages zu vermeiden, nicht die Abdeckung entfernen. Es befinden sich keine Teile darin, die vor Anwender repariert werden konnten. Reparaturen nur von qualifiziertem Fachpersonal durchführen lassen.
WARNING: ADVERTISSEMENT : ADVERTENCIA: ACHTUNG:	To prevent electrical shock or fire hazard, do not expose this appliance to rain or moisture. Before using this appliance, please read the operating instructions for further warnings. Afin de prévenir les risques de décharge électrique ou de feu, n'exposez pas cet appareil a la pluie ou a l'humidité. Avant d'utiliser cet appareil, lisez les avertissements supplantais situes dans le guide. Para evitar descargas eléctricas o peligro de incendio, no exponga este aparato a la lluvia ni a la humedad. Antes de usar este aparato, lea las instrucciones de funcionamiento para conocer más advertencias. Um einen elektrischen Schlag oder Feuergefahr zu vermeiden, sollte dieses Gerat nicht dem Regen oder Feuchtigkeit ausgesetzt werden. Vor Inbetriebnahme unbedingt die Bedienungsanleitung lesen.
	This device complies with Part 15 of the FCC rules Operation is subject to the following two conditions: 1) This device may not cause harmful interference. 2) This device must accept any interference received, that may cause undesired operation. Warning: Changes or modification to the equipment not approved by Laney can void the user's authority to use the equipment. Note: This equipment has been tested and found to comply with the limits for Class B digital device, pursuant to Part 15 of the FCC Rules. These limits are designed to provide reasonable protection against harmful interference in a residential installation. This equipment generates, uses and can radiate radio frequency energy and if not installed and used in accordance with the instructions, may cause harmful interference to radio communications. However, there is no guarantee that interference will not occur in a particular installation. If this equipment does cause harmful interference to radio or television reception, which can be determined by turning the equipment off and on, the user is encouraged to try and correct the interference by one or more of the following measures. Reorient or relocate the receiving antenna. Increase the separation between the equipment and receiver. Connect the equipment into an outlet on a circuit different from that to which the receiver is connected. Consult the dealer or an experienced radio/TV technician for help.
	This product conforms to the requirements of the following European Regulations, Directives & Rules: CE Mark (93/68/EEC), Low Voltage (2014/35/EU), EMC (2014/30/EU), RoHS (2011/65/EU), ErP (2009/125/EU) SIMPLIFIED EU DECLARATION OF CONFORMITY Full text of the EU declaration of conformity is available at the following internet address: http://support.laney.co.uk/approvals
	The object of the declaration described above is in conformity with the relevant statutory requirement Electrical Equipment (Safety) Regulations 2016, Electromagnetic Compatibility Regulations 2016, The Restriction of the use of Certain Hazardous Substances in Electrical and Electronic Equipment Regulations 2012, The Ecodesign for Energy-Related Products and Energy Information, (Amendment) (EU Exit) Regulations 2012
	In order to reduce environmental damage, at the end of its useful life, this product must not be disposed of along with normal household waste to landfill sites. It must be taken to an approved recycling centre according to the recommendations of the WEEE (Waste Electrical and Electronic Equipment) directive applicable in your country.

LANEY ELECTRONICS LTD.
STEELPARK ROAD, COOMBSWOOD BUSINESS PARK WEST, HALESOWEN, B62 8HD. UK
FOR THE LATEST INFORMATION PLEASE VISIT WWW.LANEY.CO.UK

IN THE INTEREST OF CONTINUED DEVELOPMENT, LANEY RESERVES THE RIGHT TO AMEND PRODUCT SPECIFICATION WITHOUT PRIOR NOTIFICATION.

V1.0