Assembly Instructions

Item **No.** 95415

Thank you for Purchasing this quality product.Be sure to check all packing material carefully for small parts that may have come loose inside the carton during shipment. Note! Loosely thread all screws/bolts first. Once the item is assembled then completely tighten.)

Parts List

NO.	Sketch	Description	Quantity
A	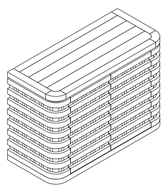	Top	1 pc
B	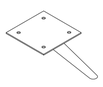	Metal foot	4pcs

Hardware List

NO.	Sketch	Description	Size	Quantity
F	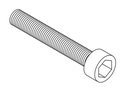	Bolt	1/4*5/8	16pcs
G		Flat Wisher	1/4	16pcs
H		SpringWisher	1/4	16pcs
I	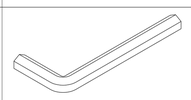	Allen Key	1/8"	1pc

STEP1:

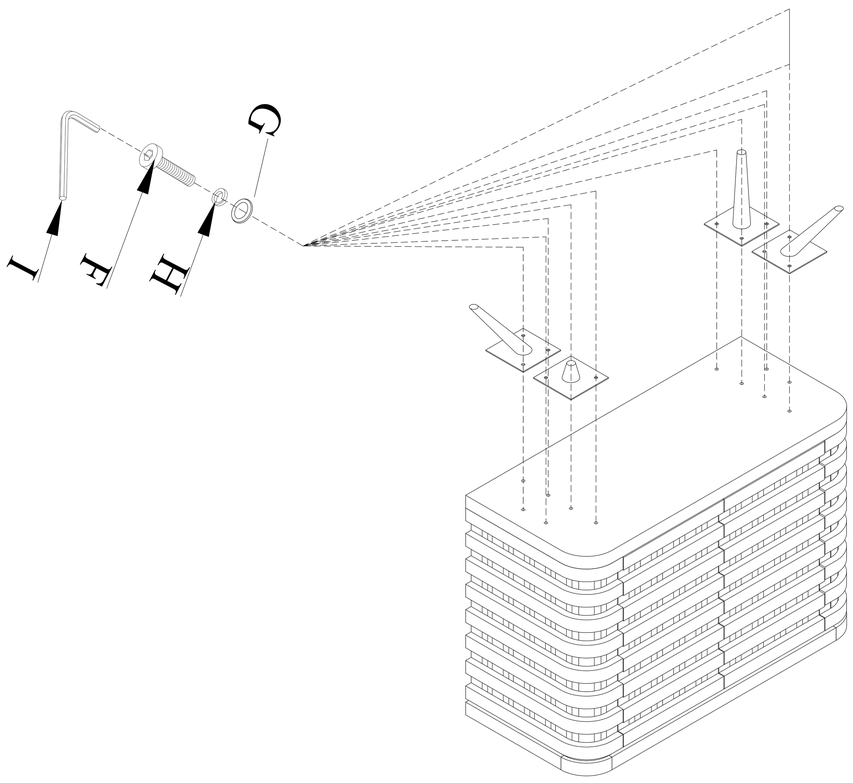

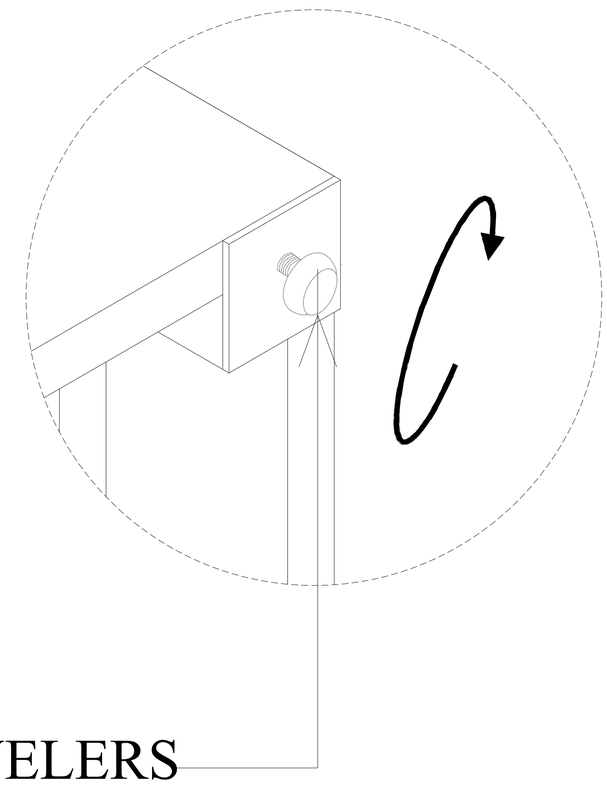

ADJUSTABLE LEVELERS

STEP2:

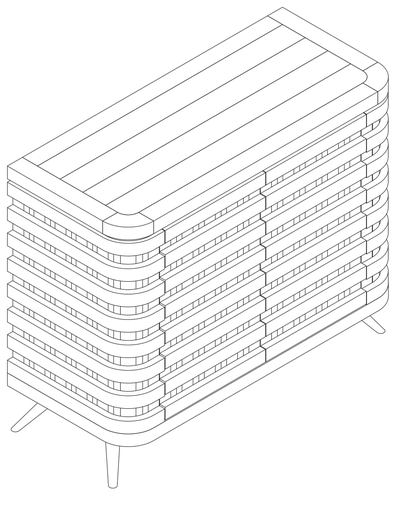

Tips for aligning doors:

Tip A: Sometimes the doors will not line up because of an uneven floor surface the furniture rests on. In that case, try adjusting the levers found on the bottom of each foot to aid in correcting.