Service Manual

SR5007 /U1B,K1B
N1SG,N1B

AV Surround Receiver

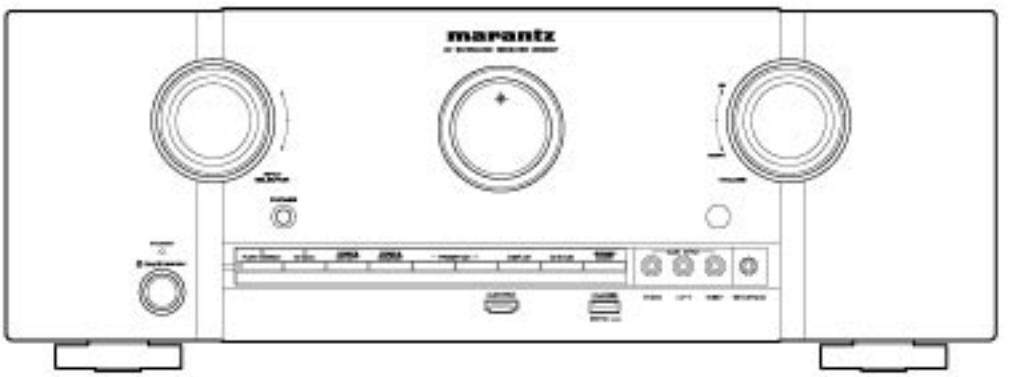

- For purposes of improvement, specifications and design are subject to change without notice.
- Please use this service manual with referring to the operating instructions without fail.
- Some illustrations using in this service manual are slightly different from the actual set.

marantz®

SR5007

Ver.5

Please refer to the MODIFICATION NOTICE.

S0579-0V05DM/DG1305

Copyright 2013 D&M Holdings Inc. All rights reserved.
WARNING: Violators will be prosecuted to the maximum extent possible.

CONTENTS

ABOUT THIS MANUAL 3
What you can do with this manual 3
Using Adobe Reader (Windows version) 4
SAFETY PRECAUTIONS 7
NOTE FOR SCHEMATIC DIAGRAM 8
TECHNICAL SPECIFICATIONS 9
DIMENSION 9
CAUTIONS IN SERVICING 10
Initializing AV Surround Receiver 10
Service Jig 10
DISASSEMBLY 11
1. FRONT PANEL ASSY 13
2. PCB MX PORT/PCB RS232C 14
3. PCB HDMI 15
4. POWER TRANS MAIN 16
5. PCB VIDEO/PCB INPUT/PCB MAIN 17
6. PCB FRONT CNT/PCB SMPS 18
7. RADIATOR ASSY 20
SPECIAL MODE 22
Special mode setting button 22
1. µcom/DSP Version display mode 23
2. PANEL/REMOTE LOCK Selection mode 26
3. Service Related Selection mode 27
4. DUAL BACKUP MEMORY 35
BLOCK DIAGRAM 37
JIG FOR SERVICING 53
WHEN THE MICROPROCESSOR IS REPLACED WITH A NEW ONE 56
PROCEDURE FOR UPGRADING THE VERSION OF THE FIRMWARE 56
1. How to update by DFW 56
2. How to update by DPMS 60
3. How to update by USB Memory 67
ADJUSTMENT 74
SURROUND MODES AND PARAMETERS 75
TROUBLE SHOOTING 79
1. POWER 79
2. Analog video 80
3. HDMI/DVI 86
4. AUDIO 94
5. Network/USB 97
6. SMPS 100
CLOCK FLOW & WAVE FORM IN DIGITAL BLOCK 104
LEVEL DIAGRAM 105
PRINTED WIRING BOARDS 111
HDMI 111
FRONT HDMI 113
OPTIONAL CIRCUIT 113
RS232 113
FRONT 114
USB 116
TOP_GUIDE 116
H/P 116
GUIDE L 116
GUIDE R 116
7CH AMP 117
VIDEO 118
FRONT CNT 119
MAIN 121
SMPS 123
SCHEMATIC DIAGRAMS (1/27) 124
HDMI SW UNIT 124
FRONT HDMI UNIT 125
HDMI RX UNIT 126
HDMI TX UNIT 127
HDMI TX DDR UNIT 128
DSP UNIT 129
DIR/PLD UNIT 130
MAIN DAC UNIT 131
DM860A UNIT 132
NET PHY UNIT 133
CPU UNIT 134
CPU LEVEL CHG UNIT 135
DIGITAL CNT UNIT 136
D.SUPPLY UNIT 137
7CH-AMP UNIT (1/2) 138
7CH-AMP UNIT (2/2) 139
SPK REG SMPS UNIT (1/4) 140
SPK REG SMPS UNIT (2/4) 141
SPK REG SMPS UNIT (3/4) 142
SPK REG SMPS UNIT (4/4) 143
INPUT UNIT 144
FRONT UNIT 145
FRONT HDMI UNIT 146
RS232 / OPTIONAL CIRCUIT UNIT 147
VIDEO F/CNT UNIT (1/3) 148
VIDEO F/CNT UNIT (2/3) 149
VIDEO F/CNT UNIT (3/3) 150
WIRING DIAGRAM 151
EXPLODED VIEW 152
PARTS LIST OF EXPLODED VIEW 153
PACKING VIEW 156
PARTS LIST OF PACKING & ACCESSORIES 157
SEMICONDUCTORS 158
1. IC's 158
2. FL DISPLAY 189
PARTS LIST OF PCB UNIT 190
7CH_AMP PCB UNIT ASS'Y 190
MAIN PCB UNIT ASS'Y 195
VIDEO PCB UNIT ASS'Y 199
FRONT PCB UNIT ASS'Y 201
INPUT PCB UNIT ASS'Y 204
HDMI PCB UNIT ASS'Y 205
RS232 PCB UNIT ASS'Y 222

ABOUT THIS MANUAL

Read the following information before using the service manual.

What you can do with this manual

Search for a Ref. No. (phrase) (Ctrl+Shift+F)

You can use the search function in Acrobat Reader to search for a Ref. No. in schematic diagrams, printed wiring board diagrams, block diagrams, and parts lists.

1. Press **Ctrl+Shift+F** on the keyboard.
   - The Search window appears.

2. Enter the Ref. No. you want to search for in the Search window, and then click the **Search** button.
   - A list of search results appears.

3. Click an item on the list.
   - The screen jumps to the page for that item, and the search phrase is displayed.

Jump to the target of a schematic diagram connector

Click the Ref. No. of the target connector in the red box around a schematic diagram connector.

- The screen jumps to the target connector.

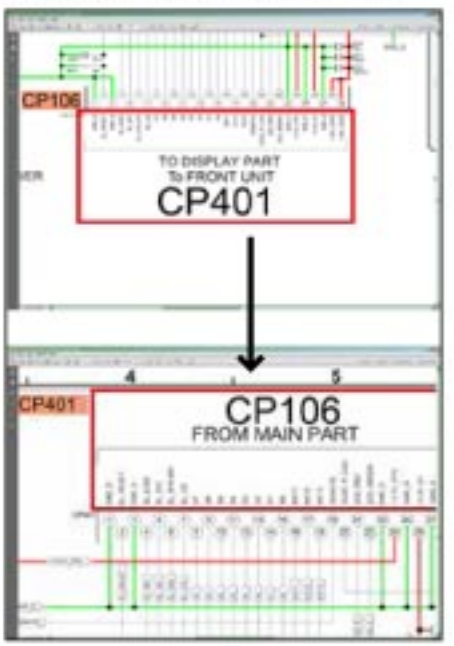

- Page magnification stays the same as before the jump.

Using Adobe Reader (Windows version)

Add notes to this data (Sign)

The Sign function lets you add notes to the data in this manual.
Save the file once you have finished adding notes.

[Example using Adobe Reader X]
On the "**View**" menu, click "**Sign**".
- The Sign pane appears.

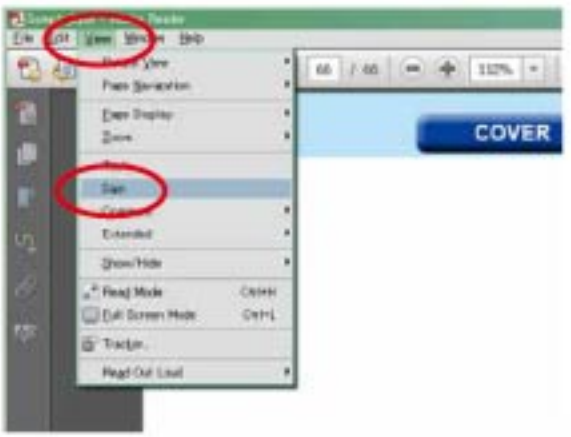

[Example using Adobe Reader 9]
On the "**Document**" menu, click "**Sign**".

Magnify schematic / printed wiring board diagrams - 1 (Ctrl+Space, mouse operation)

[Example using Adobe Reader 9,X]
Press **Ctrl+Space** on the keyboard and drag the mouse to select the area you want to view.
- The selected area is magnified.

- When you want to move the area shown, hold down **Space** and drag the mouse.
- When you want to show a full page view, press **Ctrl+0** on the keyboard.

Print a magnified part of the manual

The Properties dialog box and functions will vary depending on your printer.

1. Drag the mouse to magnify the part you want to print.
2. On the "**File**" menu, click "**Print**".
3. Configure the following settings in the Print dialog box.

- **Properties**
  Click this button and check that the printer is set to a suitable paper size.
- **Page to print**
  Select the following checkbox.
  "**More Options**" : "**Current View**"
- **Page Sizing & Handling**
  Select the following checkbox.
  "**Size**" / "**Size Options**" : "**Fit**"

4. Click the **Print** button to start printing.

Magnify schematic / printed wiring board diagrams - 2
(Pan & Zoom function)

The Pan & Zoom function lets you see which part of a magnified diagram is being shown in a separate window.

[Example using Adobe Reader X]
On the "**View**" menu, point to "**Zoom**", and then click "**Pan & Zoom**".

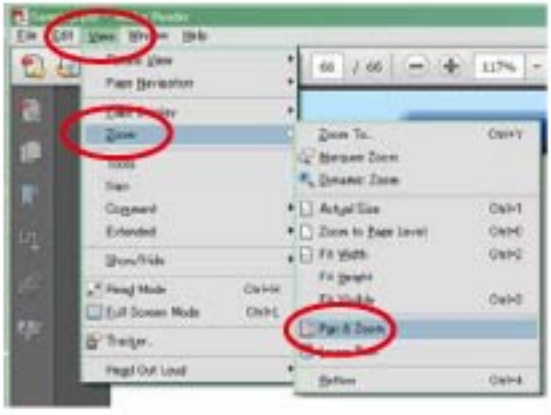

- The Pan & Zoom window appears on the screen.

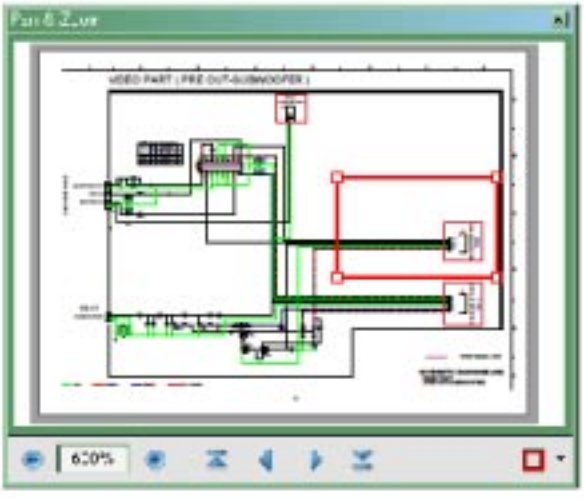

[Example using Adobe Reader 9]
On the "**Tools**" menu, point to "**Select & Zoom**", and then click "**Pan & Zoom Window**".

Magnify schematic / printed wiring board diagrams - 3
(Loupe Tool function)

The Loupe Tool function lets you magnify a specific part of a diagram in a separate window.

[Example using Adobe Reader X]
On the "**View**" menu, point to "**Zoom**", and then click "**Loupe Tool**".

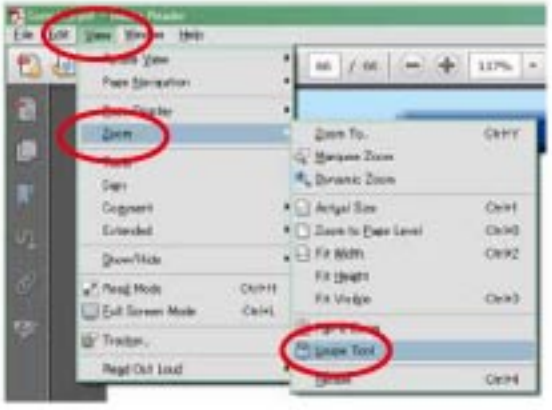

- The Loupe Tool window appears on the screen.

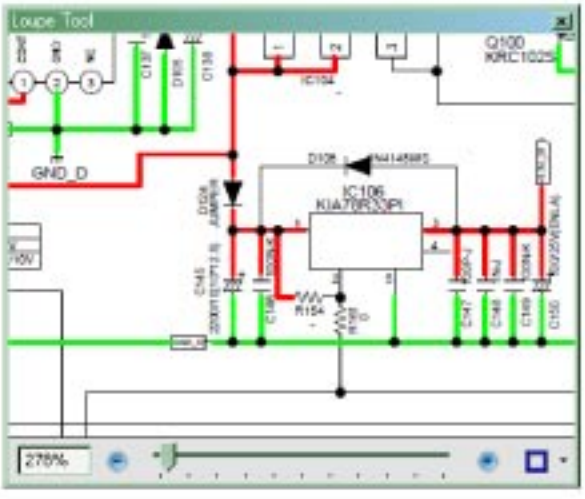

[Example using Adobe Reader 9]
On the "**Tools**" menu, point to "**Select & Zoom**", and then click "**Loupe Tool Window**".

MARANTZ DESIGN AND SERVICE

Using superior design and selected high grade components, **MARANTZ** company has created the ultimate in stereo sound. Only original **MARANTZ** parts can insure that your **MARANTZ** product will continue to perform to the specifications for which it is famous.

Parts for your **MARANTZ** equipment are generally available to our National Marantz Subsidiary or agent.

ORDERING PARTS :

Parts can be ordered either by mail or by Fax.. In both cases, the correct part number has to be specified.

The following information must be supplied to eliminate delays in processing your order :

1. Complete address
2. Complete part numbers and quantities required
3. Description of parts
4. Model number for which part is required
5. Way of shipment
6. Signature : any order form or Fax. must be signed, otherwise such part order will be considered as null and void.

USA

MARANTZ AMERICA, INC
100 CORPORATE DRIVE
MAHWAH, NEW JERSEY 07430
USA

EUROPE / TRADING

D&M EUROPE B. V.
P. O. BOX 8744, BUILDING SILVERPOINT
BEEMDSTRAAT 11, 5653 MA EINDHOVEN
THE NETHERLANDS
PHONE : +31 - 40 - 2507844
FAX : +31 - 40 - 2507860

CANADA

D&M Canada Inc.
5-505 APPLE CREEK BLVD.
MARKHAM, ONTARIO L3R 5B1
CANADA
PHONE : 905 - 415 - 9292
FAX : 905 - 475 - 4159

JAPAN

D&M Holdings Inc.
D&M BUILDING, 2-1 NISSHIN-CHO,
KAWASAKI-KU, KAWASAKI-SHI,
KANAGAWA, 210-8569 JAPAN

株式会社 ディーアンドエムホールディングス

本 社 〒210-8569
神奈川県川崎市川崎区日進町2-1 D&Mビル

KOREA

D&M SALES AND MARKETING KOREA LTD.
2F,YEON BLDG.,
86-5, BANPO-DONG, SEOCHO-GU,
SEOUL KOREA
PHONE : +82 - 2 - 715 - 9041
FAX : +82 - 2 - 715 - 9040

CHINA

D&M SALES AND MARKETING SHANGHAI LTD.
ROOM 808 SHANGHAI AIRPORT CITY TERMINAL
NO.1600 NANJING (WEST) ROAD, SHANGHAI,
CHINA. 200040
TEL : 021 - 6248 - 5151
FAX : 021 - 6248 - 4434

NOTE ON SAFETY :

Symbol ⚠ Fire or electrical shock hazard. Only original parts should be used to replaced any part marked with symbol ⚠.
Any other component substitution (other than original type), may increase risk of fire or electrical shock hazard.

安全上の注意：

⚠ がついている部品は、安全上重要な部品です。必ず指定されている部品番号のものを使用して下さい。

SHOCK, FIRE HAZARD SERVICE TEST :

CAUTION : After servicing this appliance and prior to returning to customer, measure the resistance between either primary AC cord connector pins (with unit NOT connected to AC mains and its Power switch ON), and the face or Front Panel of product and controls and chassis bottom.
Any resistance measurement less than 1 Megohms should cause unit to be repaired or corrected before AC power is applied, and verified before it is return to the user/customer.
Ref. UL Standard No. 60065.

In case of difficulties, do not hesitate to contact the Technical Department at above mentioned address.

091105DM/DG

SAFETY PRECAUTIONS

The following items should be checked for continued protection of the customer and the service technician.

LEAKAGE CURRENT CHECK

Before returning the set to the customer, be sure to carry out either (1) a leakage current check or (2) a line to chassis resistance check. If the leakage current exceeds 0.5 milliamps, or if the resistance from chassis to either side of the power cord is less than 460 kohms, the set is defective.
Be sure to test for leakage current with the AC plug in both polarities, in addition, when the set's power is in each state (on, off and standby mode), if applicable.

CAUTION Please heed the following cautions and instructions during servicing and inspection.

◎ Heed the cautions!

Cautions which are delicate in particular for servicing are labeled on the cabinets, the parts and the chassis, etc. Be sure to heed these cautions and the cautions described in the handling instructions.

◎ Cautions concerning electric shock!

(1) An AC voltage is impressed on this set, so if you touch internal metal parts when the set is energized, you may get an electric shock. Avoid getting an electric shock, by using an isolating transformer and wearing gloves when servicing while the set is energized, or by unplugging the power cord when replacing parts, for example.
(2) There are high voltage parts inside. Handle with extra care when the set is energized.

◎ Caution concerning disassembly and assembly!

Through great care is taken when parts were manufactured from sheet metal, there may be burrs on the edges of parts. The burrs could cause injury if fingers are moved across them in some rare cases. Wear gloves to protect your hands.

◎ Use only designated parts!

The set's parts have specific safety properties (fire resistance, voltage resistance, etc.). Be sure to use parts which have the same properties for replacement. The burrs have the same properties. In particular, for the important safety parts that are indicated by the ⚠ mark on schematic diagrams and parts lists, be sure to use the designated parts.

◎ Be sure to mount parts and arrange the wires as they were originally placed!

For safety seasons, some parts use tapes, tubes or other insulating materials, and some parts are mounted away from the surface of printed circuit boards.
Care is also taken with the positions of the wires by arranging them and using clamps to keep them away from heating and high voltage parts, so be sure to set everything back as it was originally placed.

◎ Make a safety check after servicing!

Check that all screws, parts and wires removed or disconnected when servicing have been put back in their original positions, check that no serviced parts have deteriorate the area around. Then make an insulation check on the external metal connectors and between the blades of the power plug, and otherwise check that safety is ensured.

(Insulation check procedure)
Unplug the power cord from the power outlet, disconnect the antenna, plugs, etc., and on the power. Using a 500V insulation resistance tester, check that the insulation resistance value between the inplug and the externally exposed metal parts (antenna terminal, headphones terminal, input terminal, etc.) is 1MΩ or greater. If it is less, the set must be inspected and repaired.

CAUTION Concerning important safety parts

Many of the electric and the structural parts used in the set have special safety properties. In most cases these properties are difficult to distinguish by sight, and the use of replacement parts with higher ratings (rated power and withstand voltage) does not necessarily guarantee that safety performance will be preserved. Parts with safety properties are indicated as shown below on the wiring diagrams and the parts list in this service manual. Be sure to replace them with the parts which have the designated part number.

(1) Schematic diagrams.....Indicated by the ⚠ mark.
(2) Parts lists.....Indicated by the ⚠ mark.
The use of parts other than the designated parts could cause electric shocks, fires or other dangerous situations.

NOTE FOR SCHEMATIC DIAGRAM

WARNING:
Parts indicated by the ⚠ mark have critical characteristics. Use ONLY replacement parts recommended by the manufacturer.
CAUTION:
Before returning the set to the customer, be sure to carry out either (1) a leakage current check or (2) a line to chassis resistance check. If the leakage current exceeds 0.5 milliamps, or if the resistance from chassis to either side of the power cord is less than 460 kohms, the set is defective.
WARNING:
DO NOT return the set to the customer unless the problem is identified and remedied.
NOTICE:
ALL RESISTANCE VALUES IN OHM. k=1,000 OHM / M=1,000,000 OHM
ALL CAPACITANCE VALUES ARE EXPRESSED IN MICRO FARAD, UNLESS OTHERWISE INDICATED. P INDICATES MICRO-MICRO FARAD. EACH VOLTAGE AND CURRENT ARE MEASURED AT NO SIGNAL INPUT CONDITION. CIRCUIT AND PARTS ARE SUBJECT TO CHANGE WITHOUT PRIOR NOTICE.

NOTE FOR PARTS LIST

1. Parts indicated by "nsp" on this table cannot be supplied.
2. When ordering a part, make a clear distinction between "1" and "I" (i) to avoid mis-supplying.
3. A part ordered without specifying its part number can not be supplied.
4. Part indicated by "★" mark is not illustrated in the exploded view.
5. General-purpose Carbon Film Resistor in the P.W.Board parts list. (Refer to the Schematic Diagram for those parts.)
6. General-purpose Carbon Chip Resistors are not included are not included in the P.W.Board parts list.
   (Refer to the Schematic Diagram for those parts.)

WARNING: Parts indicated by the ⚠ mark have critical characteristics. Use ONLY replacement parts recommended by the manufacturer.

TECHNICAL SPECIFICATIONS

❑ Audio Section

- **Power amplifier**

Rated output:

Front :
100 W + 100 W (8 Ω, 20 Hz – 20 kHz with 0.08 % T.H.D.)

Center :
100 W (8 Ω, 20 Hz – 20 kHz with 0.08 % T.H.D.)

Surround :
100 W + 100 W (8 Ω, 20 Hz – 20 kHz with 0.08 % T.H.D.)

Surround back:
100 W + 100 W (8 Ω, 20 Hz – 20 kHz with 0.08 % T.H.D.)

Maximum effective output power:

Front :
150 W + 150 W (6 Ω, 1 kHz with 10 % T.H.D.)

Center :
150 W (6 Ω, 1 kHz with 10 % T.H.D.)

Surround :
150 W + 150 W (6 Ω, 1 kHz with 10 % T.H.D.)

Surround back:
150 W + 150 W (6 Ω, 1 kHz with 10 % T.H.D.)

Output connectors: 6 – 8 Ω

- **Analog**

Input sensitivity/Input impedance: 200 mV/47 kΩ
Frequency response: 10 Hz – 100 kHz — +1, –3 dB (DIRECT mode)
S/N : 100 dB (IHF–A weighted, DIRECT mode)

❑ Video section

- **Standard video connectors**

Input/output level and impedance: 1 Vp-p, 75 Ω
Frequency response : 5 Hz – 10 MHz — 0, –3 dB

- **Color component video connector**

Input/output level and impedance:
Y (brightness) signal — 1 Vp-p, 75 Ω
PB / CB signal — 0.7 Vp-p, 75 Ω
PR / CR signal — 0.7 Vp-p, 75 Ω
Frequency response : 5 Hz – 60 MHz — 0, –3 dB

❑ Tuner section

[FM](Note: μV at 75 Ω, 0 dBf = 1 x 10^{-15} W)
Receiving Range (for U model):
[FM] 87.5 MHz – 107.9 MHz
Receiving Range (for N, K model):
[FM] 87.5 MHz – 108.0 MHz
Usable Sensitivity:
[FM] 1.2 μV (12.8 dBf)
50 dB Quieting Sensitivity (for U model):
[FM] MONO 2.8 μV (20.2 dBf)
50 dB Quieting Sensitivity (for N, K model):
[FM] MONO 2.0 μV (17.3 dBf)
S/N (IHF-A) (for U model) :
[FM] MONO 70 dB(IHF–A weighted, DIRECT mode)
STEREO 67 dB(IHF–A weighted, DIRECT mode)
S/N (IHF-A) (for N, K model):
[FM] MONO 72 dB (DIRECT mode)
STEREO 67 dB (DIRECT mode)
Total harmonic Distortion (at 1 kHz) (for U model):
[FM] MONO 0.7 %
STEREO 1.0 %
Total harmonic Distortion (at 1 kHz) (for N, K model):
[FM] MONO 0.3 %
STEREO 0.7 %

❑ General

Power supply (for U model) : AC 120 V, 60 Hz
Power supply (for N model) : AC 230 V, 50/60 Hz
Power supply (for K model) : AC 220 V, 50 Hz
Power consumption:
650 W
0.2 W (Standby)
0.5 W (CEC standby)

DIMENSION

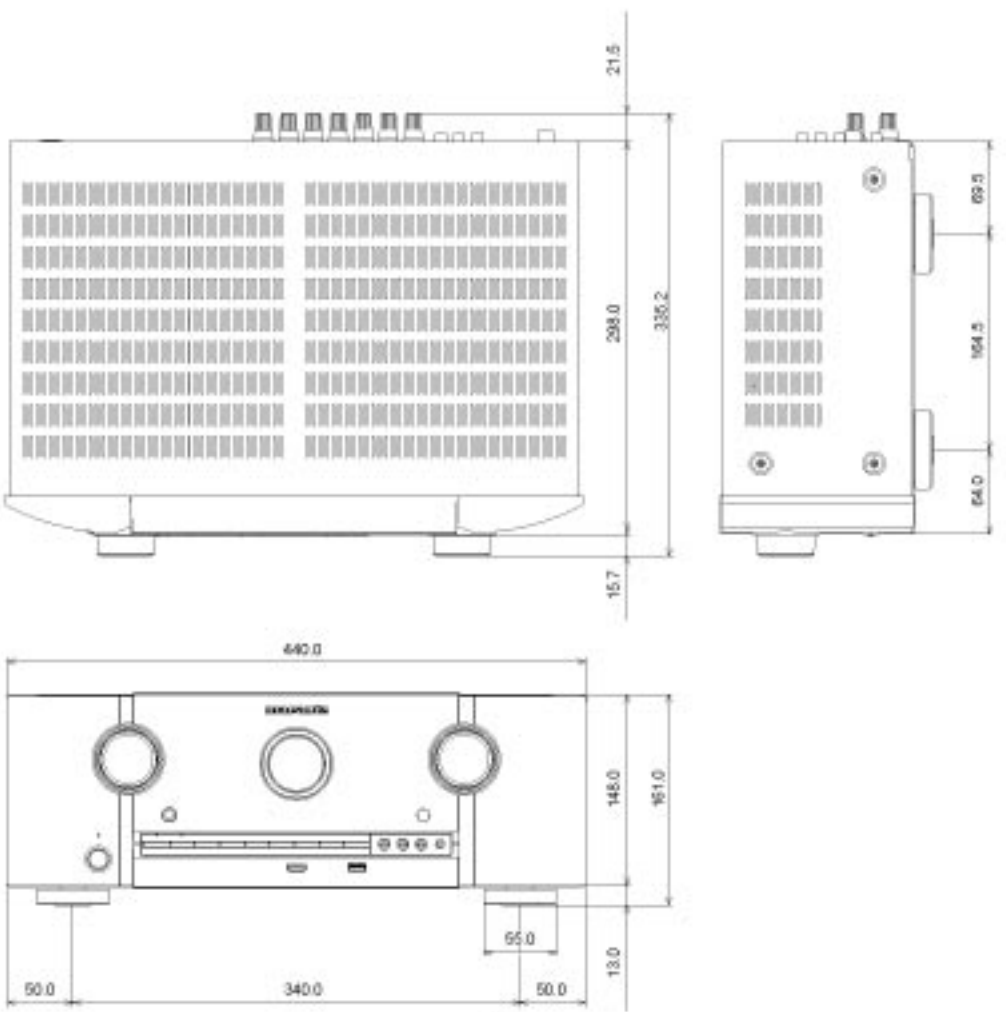

CAUTIONS IN SERVICING

Initializing AV Surround Receiver

AV Surround Receiver initialization should be performed when the µcom, peripheral parts of µcom, and Digital PCB. were replaced.

1. Turn off the power pressing "ON/STANDBY (⏻)" button.
2. Press "ON/STANDBY (⏻)" button while simultaneously while pressing "PRESET CH +" and "PRESET CH –" buttons.
3. Check that the entire display is flashing at intervals of about 1 second, and then release the 2 buttons.
   The microprocessor will be initialized.

NOTE: • If step 3 fails, start over from step 1.
• All user settings will be lost and the factory setting will be recovered after the set is initialized.
So make sure to note down your setting beforehand for restoring after the initialization.

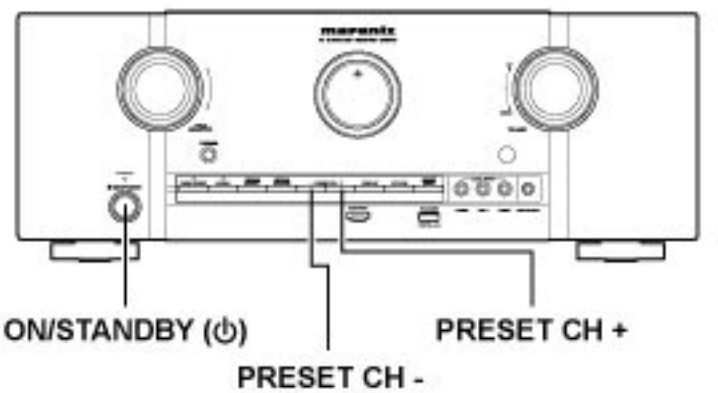

Service Jig

When you repair the printing board, you can use the following JIG (Extension cable kit).
Please order it from Marantz Official Service Distributor in your region if necessary.

8U-110084S : EXTENSION UNIT KIT : 1 Set
(Refer to 53 page.)

DISASSEMBLY

- Disassemble in order of the arrow in the following figure.
- In the case of the re-assembling, assemble it in order of the reverse of the following flow.
- In the case of the re-assembling, observe "attention of assembling".
- If wire bundles are untied or moved to perform adjustment or replace parts etc., be sure to rearrange them neatly as they were originally bundled or placed afterward.
  Otherwise, incorrect arrangement can be a cause of noise generation.

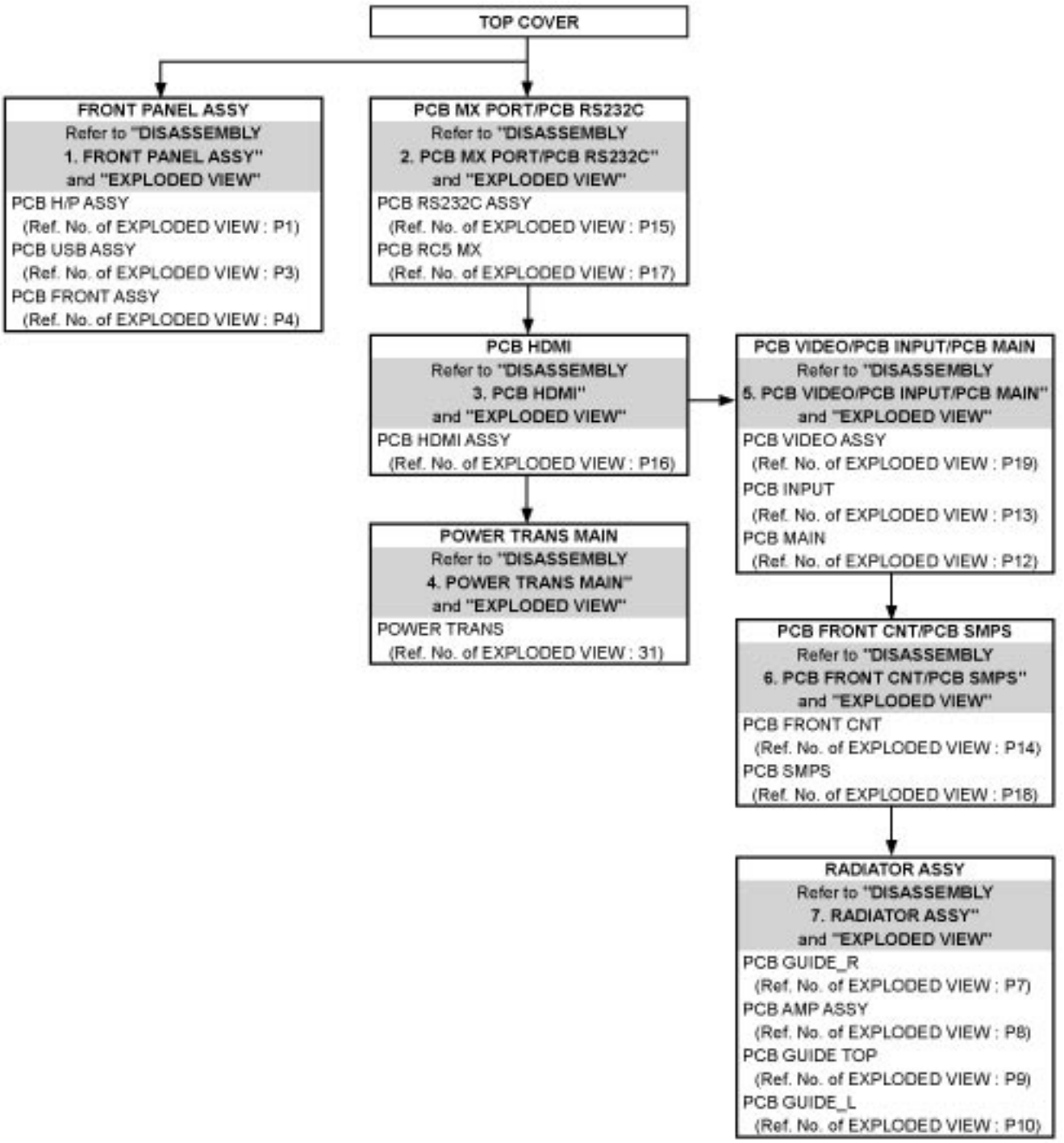

About the photos used for "descriptions of the DISASSEMBLY" section

- The shooting direction of each photograph used herein is indicated on the left side of the respective photograph as "Shooting direction: ***".
- Refer to the diagram below about the shooting direction of each photograph.
- Photographs with no shooting direction indicated were taken from the top of the set..

The viewpoint of each photograph (Shooting direction)

[View from the top]

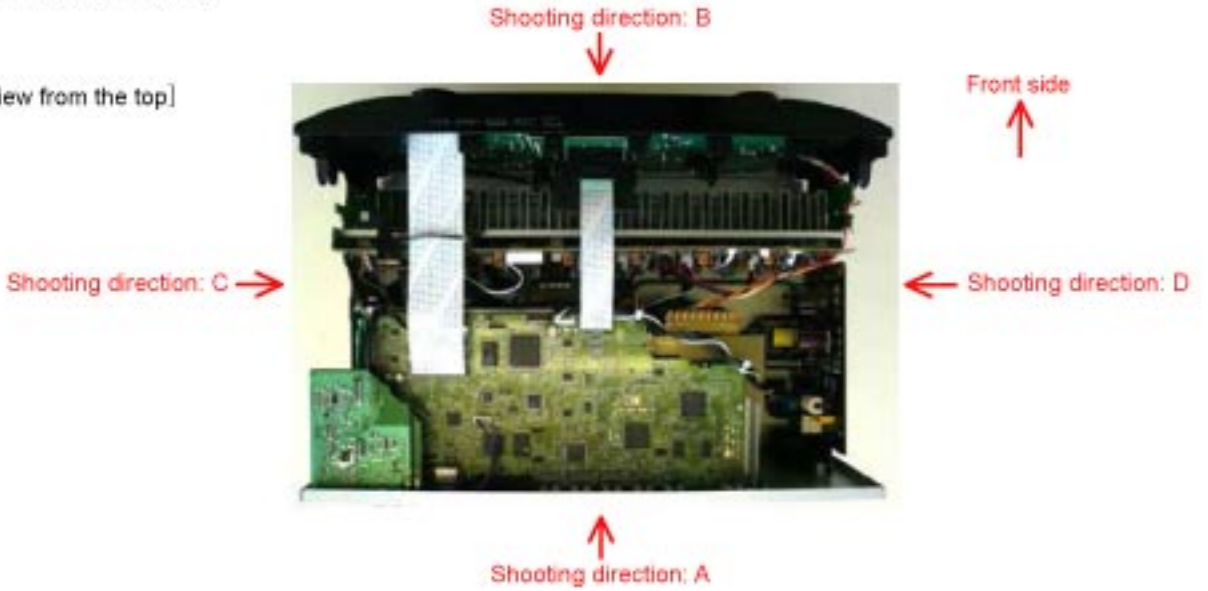

1. FRONT PANEL ASSY

Proceeding : TOP COVER → FRONT PANEL ASSY

(1) Remove the screws.

View from the bottom

(2) Cut the wire clamp band, then disconnect the connector wires and FFC. Remove the screws.

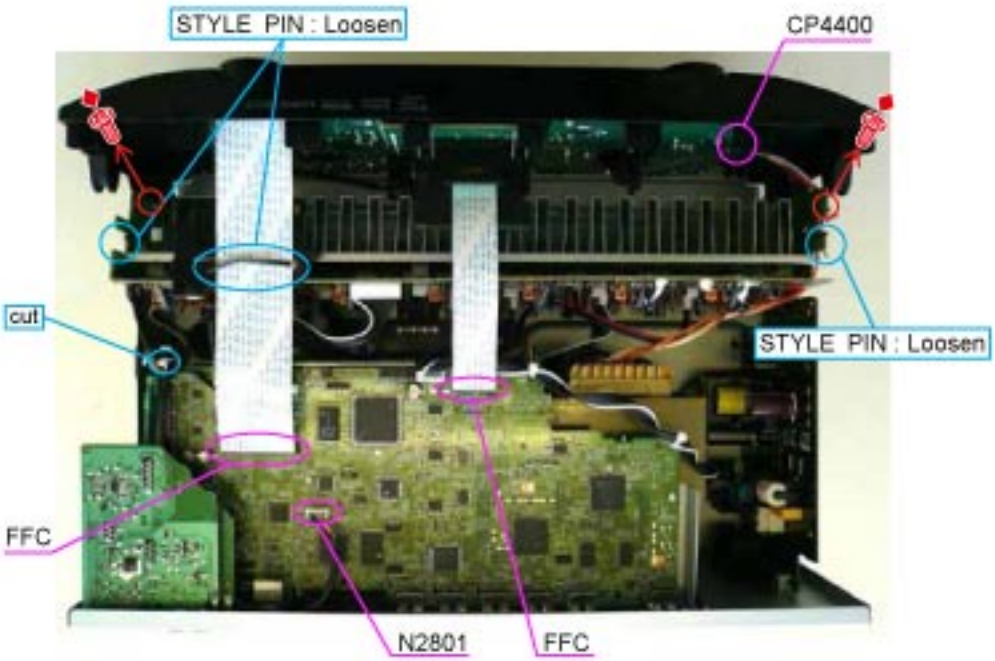

Please refer to "EXPLODED VIEW" for the disassembly method of each PCB included in FRONT PANEL ASSY.

2. PCB MX PORT/PCB RS232C

Proceeding : TOP COVER → BACK CHASSIS → PCB MX PORT/PCB RS232C

(1) Remove the screws.

Shooting of photograph: A

(2) Disconnect the connector board.

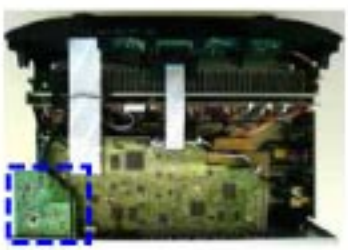

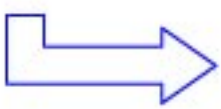

Please refer to "EXPLODED VIEW" for the disassembly method of PCB RC5_MX and PCB RS232C.

3. PCB HDMI

Proceeding : TOP COVER → BACK CHASSIS → PCB HDMI

(1) Remove the screws.

Shooting of photograph: A

(2) Cut the wire clamp band, then disconnect the connector wires and FFC, then disconnect the connector board and HOLDER.

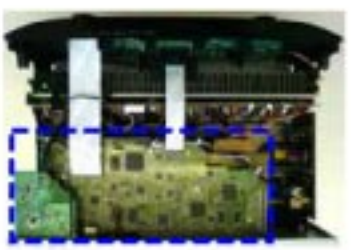

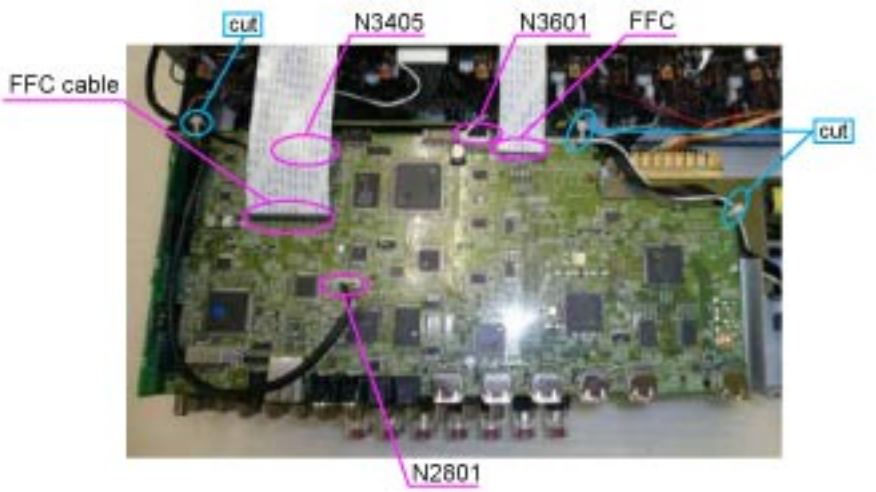

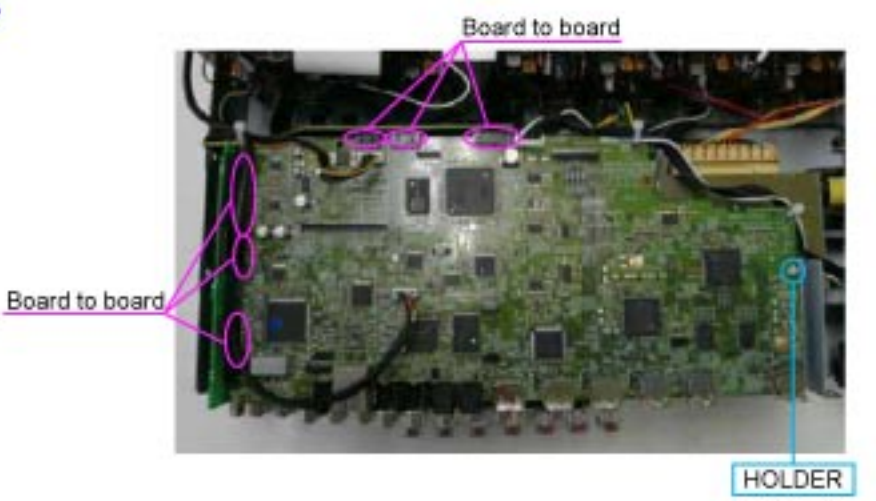

4. POWER TRANS MAIN

Proceeding : TOP COVER → BACK CHASSIS → PCB HDMI → POWER TRANS MAIN

(1) Disconnect the connector wires, then remove the screws.

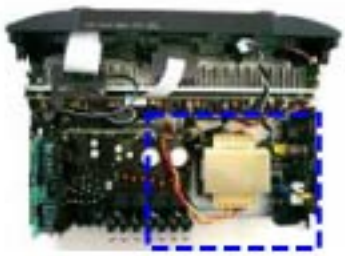

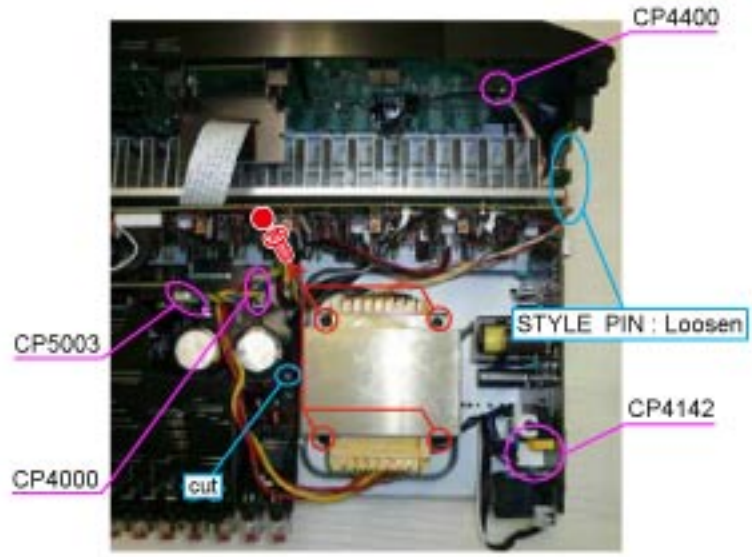

5. PCB VIDEO/PCB INPUT/PCB MAIN

Proceeding : TOP COVER → BACK CHASSIS → PCB HDMI → PCB VIDEO/PCB INPUT/PCB MAIN

(1) Disconnect the connector board.

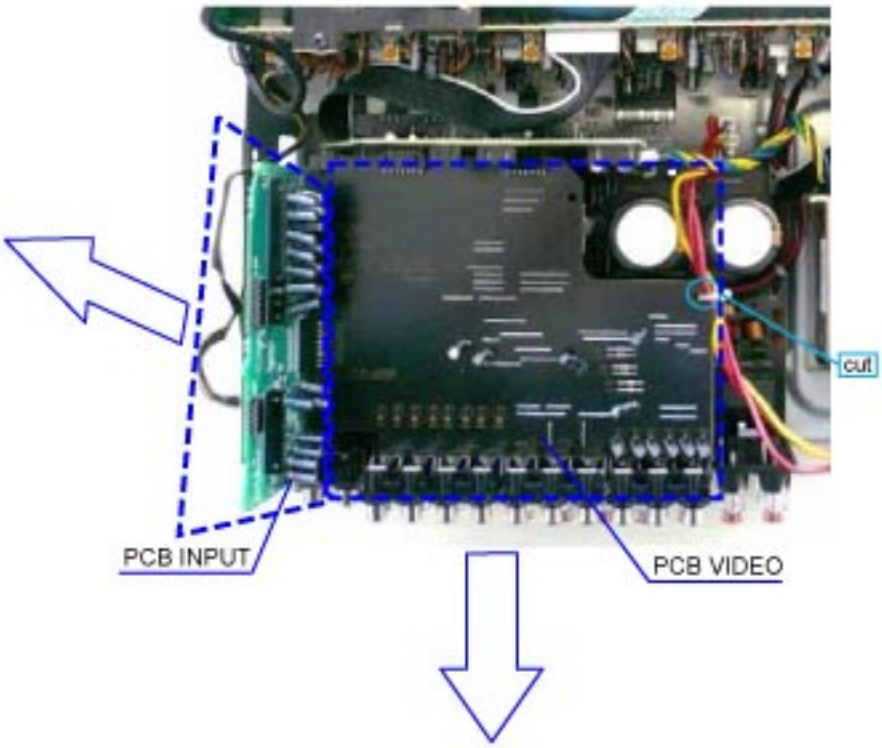

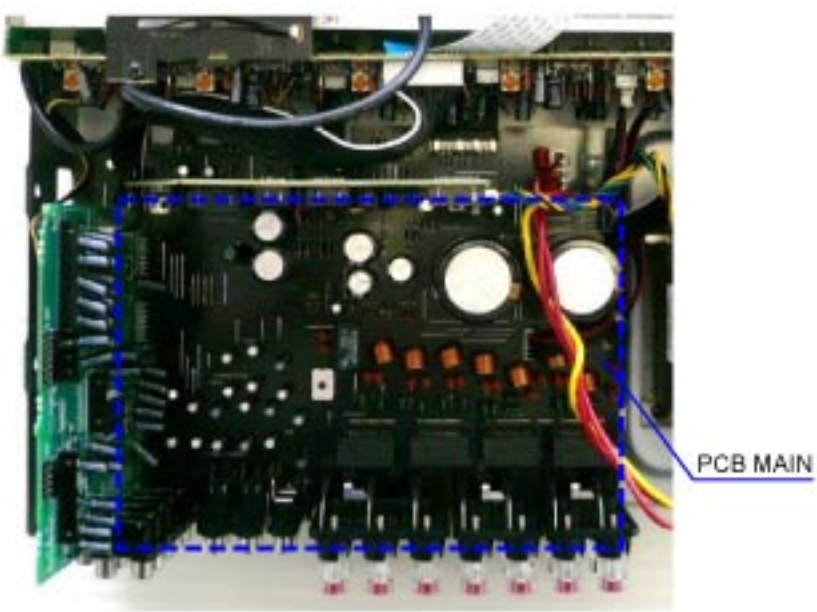

Please refer to "EXPLODED VIEW" for the disassembly method of each PCB.

6. PCB FRONT CNT/PCB SMPS

Proceeding : TOP COVER → BACK CHASSIS → PCB HDMI → PCB VIDEO → PCB FRONT CNT/PCB SMPS

(1) Remove the screws.

View from the bottom

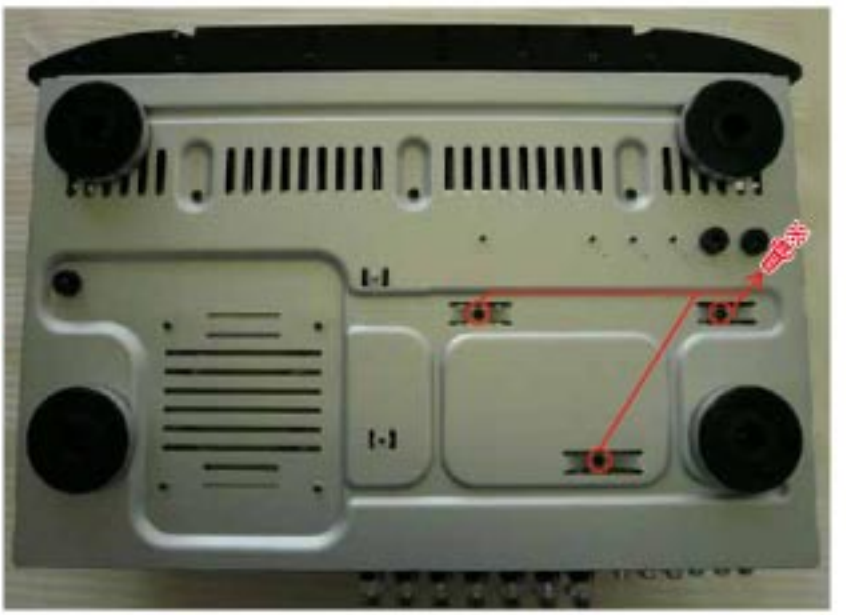

(2) Disconnect the connector wire.

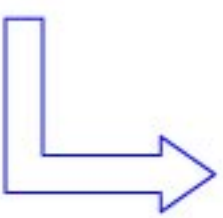

(3) Remove the screws.

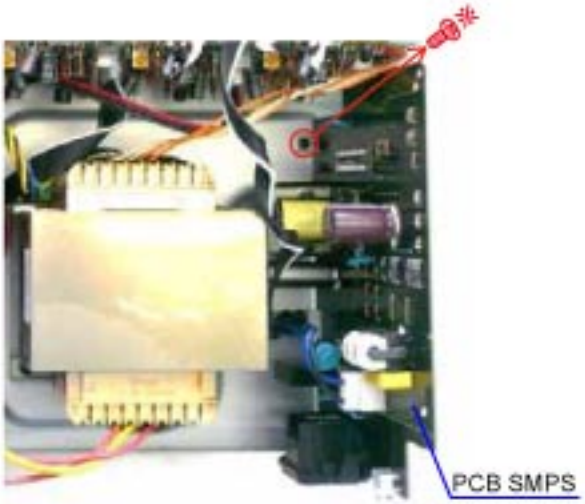

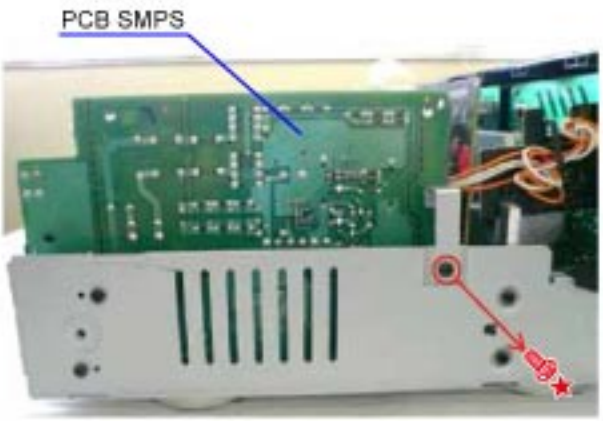

Please refer to "EXPLODED VIEW" for the disassembly method of each PCB.

7. RADIATOR ASSY

Proceeding : TOP COVER → RADIATOR ASSY

(1) Remove the screws.

View from the bottom

(2) Cut the wire clamp band, then disconnect the connector wires and FFC.

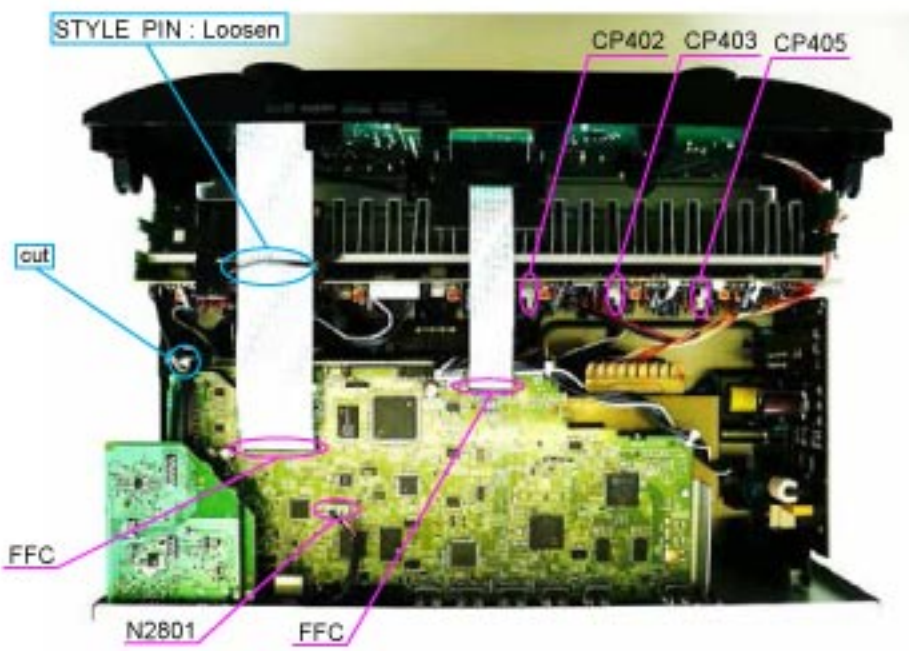

(3) Remove the screws.

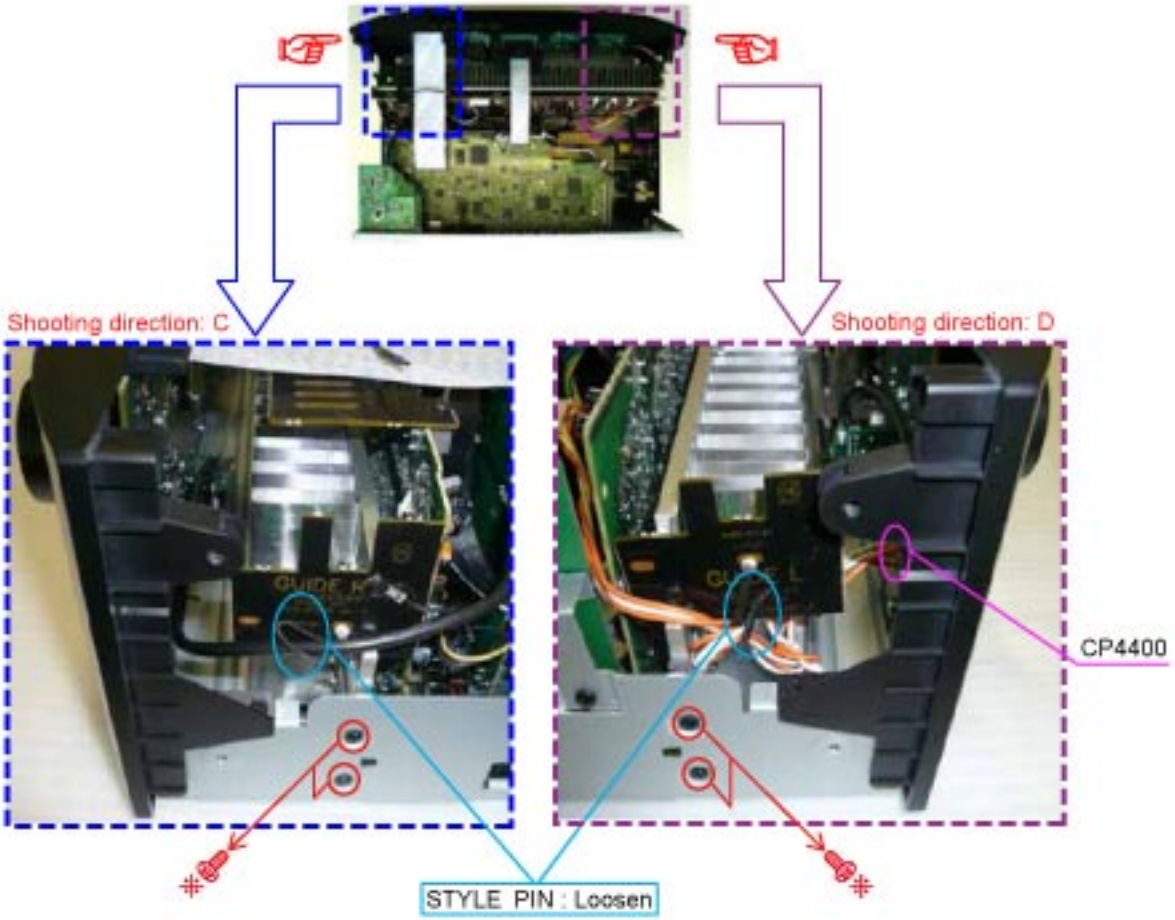

Please refer to "EXPLODED VIEW" for the disassembly method of each PCB included in RADIATOR ASSY.

SPECIAL MODE

Special mode setting button

※ No.1 - 7 : Press the "ON/STANDBY (⏻)" button to turn on the power while pressing both the button A and the button B at the same time.

※ No.8 - 10 : Turn on the power, then press and hold down the button A and button B for over 3 seconds.

No.	Mode	Button A	Button B	Contents
1	Version display (µcom/DSP Error Display)	DISPLAY	STATUS	Firmware versions such as Main or DSP are displayed in the FL Display. Errors are displayed when they occur. (Refer to 23 page)
2	User Initialization mode (Installer Setup settings are not initialized.)	ZONE2 SOURCE	M-DAX	Backup data initialization is carried out. (Installer Setup settings are not initialized.)
3	Factory Initialization mode (Installer Setup settings are also initialized.)	PRESET CH +	PRESET CH –	Backup data initialization is carried out. (Installer Setup settings are also initialized.)
4	PANEL/REMOTE LOCK Selection mode	DISPLAY	M-DAX	Selects to reject operations through panel buttons and the master volume knob on the main unit and operations via the remote control.
5	Service Related Selection mode	ZONE2 SOURCE	STATUS	Selects the "Diagnostic mode" or "Displaying the protection history mode".
6	Mode for switching tuner frequency step (U/N model only)	DISPLAY	PRESET CH –	Change tuner frequency step to FM:50kHz/200kHz
7	Installer Setup mode	SOUND MODE	STATUS	Access the Remote Maintenance mode via the internet. Installer Setup is displayed on GUI/Option Menu. ※ Refer to AVR_RemoteMaintenance_.pdf of SDI.
8	Memory Backup	PRESET CH +	PRESET CH –	Backup of DUAL BACKUP MEMORY is performed. (Refer to 35 page)
9	Memory Recovery	PRESET CH +	DISPLAY	Recovery of DUAL BACKUP MEMORY is performed. (Refer to 35 page)
10	Memory Backup Clear	SOUND MODE	PRESET CH –	Backup of DUAL BACKUP MEMORY is cleared. (Refer to 35 page)

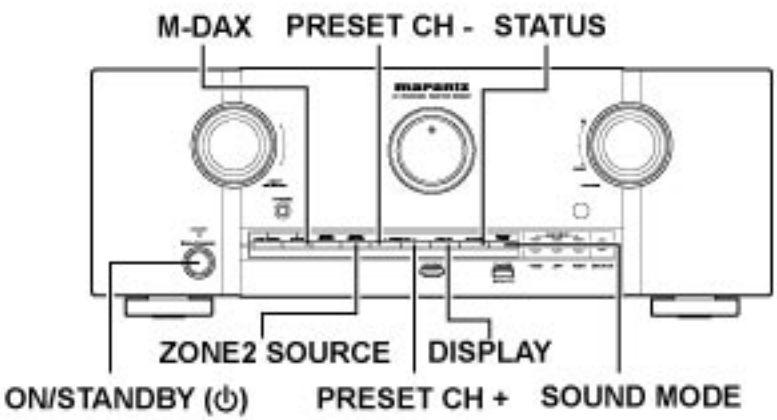

1. µcom/DSP Version display mode

1.1. Operation specifications

µcom/DSP version display mode:

When the set is started up in this mode, the version information is displayed.

Starting up:

Press the "ON/STANDBY (⏻)" button to turn on the power while pressing the "DISPLAY" and "STATUS" buttons.
Now, press the "STATUS" button to the display the 2nd item information on the FL Display.

※ When the version is displayed on the FL Display, the version list is also displayed on the GUI.

1.2. Display Order

Error information(Refer to **1.3. Error display**) → ① Model destination information → ② Firmware Package Version → ③ Main µ-com / FBL(1st Boot Loader) Version → ④ DSP ROM Version → ⑤ Audio PLD Version → ⑥ GUI SFLASH Version → ⑦ Ethernet(DM860A) 1st Boot Loader, Hardware ID → ⑧ Ethernet(DM860A) 2nd Boot Loader, Rhapsody Flag → ⑨ Ethernet(DM860A) IMAGE → ⑩ Ethernet(DM860A)MAC ADDRESS information

① Model destination information :

SR5007 U model

FLD	S	R	5	0	0	7		U
		S	N	-	*	*	*	*
			*	*	*	*	*	*

SR5007 N model

FLD	S	R	5	0	0	7		N
		S	N	-	*	*	*	*
			*	*	*	*	*	*

SR5007 K model

FLD	S	R	5	0	0	7		K
		S	N	-	*	*	*	*
			*	*	*	*	*	*

② Firmware Package Version :

FLD	P	A	C	K	A	G	E	
					0	0	0	0

③ Main µ-com / FBL(1st Boot Loader) Version :

FLD	M	A	I	N				
	*	*	*	*	*	*	*	*
	B	L	-	*	*	.	*	*

④ DSP ROM Version :

FLD	D	S	P					
				*	*	.	*	*

⑤ Audio PLD Version :

FLD	A	.	P	L	D			
				*	*	.	*	*

⑥ GUI S-FLASH Version :

SR5007 U model

FLD	G	U	I					
	1	4	2	1	*	*	*	*

SR5007 N model

FLD	G	U	I					
	1	4	2	2	*	*	*	*

SR5007 K model

FLD	G	U	I					
	1	4	2	5	*	*	*	*

⑦ Ethernet(DM860A) 1st Boot Loader, Hardware ID :

FLD	N	E	T		F	B	L	
	*	*	*	*	*	*		
						-	A	A

⑧ Ethernet(DM860A) 2nd Boot Loader, Rhapsody Flag :

FLD	N	E	T		S	B	L	
	*	*	*	*	*	*	*	*
	*	*	*	*	*	-	0	A

⑨ Ethernet(DM860A) IMAGE :

FLD	N	E	T		I	M	G	
	*	*	*	*	*	*	*	*
	*	*	*	*	*			

⑩ Ethernet(DM860A) MAC ADDRESS information :

FLD	N	E	T		M	A	C	
			*	*	*	*	*	*
		-	*	*	*	*	*	*

1.3. Error display

See the following table for each "Error information" display and its explanation (status).
Display order is ①,②,③,④,⑤.

Condition	Status	FL Display	Trouble shooting
① Firm Check NG	Compared with the destination setting on the board. This is displayed when the model name or destination information written into the firmware does not match. (※)	FIRM ERROR	• Please check the destination-resistors (R773/R776, HDMI B'D). • Please write the firmware of correct destination.
② DIR NG	No response from DIR	DIR ERROR 01	• Please check DIR (IC21, HDMI B'D) and around circuits.
③ DSP NG	When DSP code boot is performed, the DSP FLAG0 port does not change to "H" even if DSP reset is executed.	DSP ERROR 01	• Please check DSP (U8, HDMI B'D) and around circuits.
	Before DSP command is issued, the DSP BUSY port does not change to "L".	DSP ERROR 02	
	When DSP data read is performed, executing WRITE="L" does not result in ACK="H".	DSP ERROR 03	
	When DSP data read is performed, executing REQ="L" does not result in ACK="L".	DSP ERROR 04	
	When DSP data writing is performed, executing WRITE="H" does not result in ACK="H".	DSP ERROR 05	
	When DSP data writing is performed, executing REQ="L" does not result in ACK="L".	DSP ERROR 06	
④ IP SCALER NG	An error occurred in testing writing data between IP SCALER and DRR.	IP SCALER ERR 01	• Please check IP SCALER (U1601, HDMI B'D) and around circuits.
	Testing writing data between IP SCALER and DRR resulted in no response.	IP SCALER ERR 02	
⑤ EEPROM NG	Error occurs in EEPROM checksum. (*** is a block address number.)	E2PROM ERROR ***	

Status	FL Display	
※ The written Firmware and product settings (model name, brand name, destination) are compared. If Firmware that is not designed for this product is written, ▲ is displayed in the upper right column, as shown on the right.	MAIN ▲ ** BL-**.**	A.PLD ▲ **.**
	DSP ▲ **.**	GUI ▲ **

1.4. Version display on the Setup Menu

Use the following procedure to display the firmware version.

(1) Press the "SETUP" button on the remote control.
(2) Select "General-Information-Firmware".

A version with 20 digits is displayed as shown in the following image.

GUI Image

The displayed 20 digits are derived from each device version as shown below.

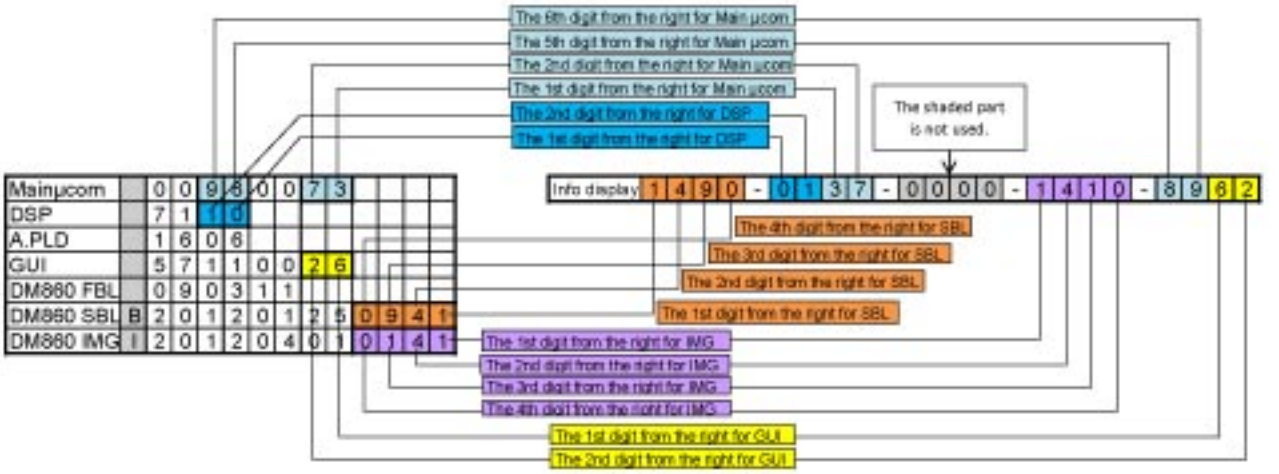

※ This firmware version No. (xxxx-xxxx-xxxx-xxxx) is included in the service contact document.
These 20 digits are also included in the document.

2. PANEL/REMOTE LOCK Selection mode

2.1. Behavior specifications

In this mode, you can switch between the PANEL LOCK MODE and the Mode for preventing remote control acceptance.

2.2. Starting up

Press the "ON/STANDBY (⏻)" button to turn on power while pressing the "DISPLAY" and "M-DAX" buttons.
Press the "PRESET CH +" button to select the mode and the "STATUS" button to confirm the selection.

2.3. Mode selection method and how each mode is displayed

Each time you press the "PRESET CH +" button, the mode displayed on the FL DISPLAY changes.
While the desired mode name is displayed on the FL DISPLAY, press the "STATUS" button. The set is restarted and the selected mode takes effect.
The currently set item is marked with " ＊ ".

①

FLD	P	/	U		L	O	C	K
	＊	O	N					

Operations using the main unit panel buttons and the master volume knob are rejected.

②

FLD	F	P			L	O	C	K
		O	N					

Operations using the main unit panel buttons are rejected.

③

FLD	F	P			L	O	C	K
		O	F	F				

Panel lock mode is cancelled.

④

FLD	R	C			L	O	C	K
		O	N					

Operations using the remote control are rejected.

⑤

FLD	R	C			L	O	C	K
	＊	O	F	F				

RC lock mode is cancelled.

3. Service Related Selection mode

3.1. Behavior specifications

In this mode, you can switch between the Diagnostic mode (SERVICE CHECK), the Displaying the protection mode (PROTECTION) and the 232C clear mode (RS232C RESET).

3.2. Starting up

Press the "ON/STANDBY (⏻)" button to turn on power while pressing the "ZONE2 SOURCE" and "STATUS" buttons. Press the "PRESET CH +" button to select the mode and press the "STATUS" button to restart the set and make the setting take effect.

①

FLD	1	S	E	R	V	I	C	E
		C	H	E	C	K		

This mode is used for confirming the Video and Audio (signal) paths. (Diagnostic mode)

The signal paths of the set can be easily confirmed after repair.

②

FLD	2	P	R	O	T	E	C	T

The protection history can be checked.

③

FLD	3		R	S	2	3	2	C
			R	E	S	E	T	

The 232C standby mode is changed to the Normal standby mode.

3.3. Canceling diagnostic mode

Turn off the power by pressing the "ON/STANDBY (⏻)" button.

Personal notes:

3.4. DIAGNOSTIC MODE (Video/Audio (signal) path confirmation mode)

This mode is used for confirming the Video and Audio (signal) paths. (Troubleshooting)
Confirming the operation of unit can be easily done after repair.
Backup data will not be lost.

3.4.1. Operation

Use the remote control (RC014SR) that is supplied with the SRxx06 model. Press buttons on the remote control in the order indicated in the "Details of how to operate remote control" column in the following table to establish the confirmation path.
You will find using another remote control unit with the macro functions very useful. To use the macro functions, program a macro function to output a remote control code in accordance with the steps in the table below.

3.4.2. Video system confirmation items

fig.XX : Refer to the block diagram of the fig.XXth.

	Confirmation item	Setting and display	Details of how to operate remote controller *a)	Output sequence of remote control codes ※ It is useful to form a macro program. *b)	Contents of confirmation	Remarks
1	Analog Video (signal) Path fig.1	Video Convert (IP Scaler) : OFF All ZONE : ON Display: U D U D - 0 1 - - - d B - - - -	1.Press [AMP] 2.Press [Z2] 3.Press [STANDBY]	①ZONE2 POWER OFF	·Input : CVBS / Output : CVBS ·Input : Component / Output : Component ·Input : USB (Picture) / Output : CVBS (※ As the input source, you can switch from DVD to other ones.)	
			4.Press [AMP] 5.Press [1/AUTO]	②KEY1/AUTO (Main Zone) (Initialization & Video Convert All OFF)		
			6.Press [Z2] 7.Press [POWER ON]	③ZONE2 POWER ON		
			8.Press [AMP] 9.Press [DVD] twice	④DVD (Main Zone)		
2	Analog or HDMI to HDMI (signal) Path fig.2	Video Convert (IP Scaler) : ON IP Scaler : Analog&HDMI Resolution : Auto Display: U D U D 0 2 - - - d B - - - -	1.Press [AMP] 2.Press [Z2] 3.Press [STANDBY]	①ZONE2 POWER OFF	·Input : CVBS / Output : HDMI ·Input : Component / Output : HDMI ·Input : HDMI / Output : HDMI ·Input : USB (Picture) / Output : HDMI (※ As the input source, you can switch from DVD to other ones.)	Confirm the input pass one by one. Because it becomes only the input of the highest input becomes Convert/IP Scaler (signal) Path if it inputs it at the same time.
			4.Press [AMP] 5.Press [2/STEREO]	②KEY2/STEREO (Main Zone) (Initialization & Video Convert All OFF & IP Scaler "Analog & HDMI")		
			6.Press [DVD] twice	③DVD (Main Zone)		
3	GUI FUNCTION fig.3	Video Convert (IP Scaler) : ON IP Scaler : Analog&HDMI Resolution : Auto Menu : ON All ZONE :ON Display: U D U D 0 2 - - - d B - - - -	1.Press [AMP] 2.Press [Z2] 3.Press [STANDBY]	①ZONE2 POWER OFF	·GUI Display / Output : HDMI (※ As the input source, you can switch from DVD to other ones.)	
			4.Press [AMP] 5.Press [2/STEREO]	②KEY2/STEREO (Main Zone) (Initialization & Video Convert All OFF & IP Scaler "Analog & HDMI")		
			6.Press [Z2] 7.Press [POWER ON]	③ZONE2 POWER ON		
			8.Press [AMP] 9.Press [DVD] twice	④DVD (Main Zone)		
			10.Press [AMP MENU]	⑤GUI MENU (Main Zone)		
4	CEC FUNCTION (Control Monitor : HDMI Monitor1) fig.4	HDMI Control : ON Display: U D U D 0 3 - - - d B - - - -	1.Press [AMP] 2.Press [Z2] 3.Press [STANDBY]	①ZONE2 POWER OFF	·When the power supply of a TV is put in the standby mode, make sure that the power supply of this unit is also put in the standby mode. (※ As the input source, you can switch from DVD to other ones.)	
			4.Press [AMP] 5.Press [3/M-DAX]	②KEY3/M-DAX (Main Zone) (Initialization & CEC Control ON & Select Control Monitor 1)		
			6.Press [DVD] twice	③DVD (Main Zone)		
5	HDMI Audio (signal) Path (Audio : AMP) fig.5	Audio : AMP(When checking the audio output from AMP) Display: U D U D 0 5 - - - d B - - - -	1.Press [AMP] 2.Press [Z2] 3.Press [STANDBY]	①ZONE2 POWER OFF	·Input : HDMI (Signal of PCM, DolbyDigital or DTS) / Output : Speakers ·Input : HDMI (Signal of HD Audio) / Output : Speakers (※ As the input source, you can switch from DVD to other ones.)	
			4.Press [AMP] 5.Press [5/HT-EQ]	②KEY5/HT-EQ (Main Zone) (Initialization & Select Audio AMP)		
			6.Press [DVD] twice	③DVD (Main Zone)		
6	HDMI Audio (signal) Path (Audio : TV) fig.6	Audio : TV(When checking the audio output from TV) Display: U D U D 0 6 - - - d B - - - -	1.Press [AMP] 2.Press [Z2] 3.Press [STANDBY]	①ZONE2 POWER OFF	·Input : HDMI (Signal of PCM, DolbyDigital or DTS) / Output : TV (※ As the input source, you can switch from DVD to other ones.)	
			4.Press [AMP] 5.Press [6/V.SEL]	②KEY6/V.SEL (Main Zone) (Initialization & Select Audio TV)		
			6.Press [DVD] twice	③DVD (Main Zone)		

3.4.3. Audio system confirmation items

fig.XX : Refer to the block diagram of the fig.XXth.

	Confirmation item	Setting and display	Details of how to operate remote controller	Output sequence of remote control codes ※ It is useful to form a macro program.	Contents of confirmation	Remarks
1	Analog (signal) Path fig.7	Input Mode : Fixed ANALOG SURROUND mode : DIRECT Amp assign : NORMAL Display: A D U D 0 1 d B	1.Press [AMP] 2.Press [Z2] 3.Press [STANDBY]	①ZONE2 POWER OFF	·Input : Analog / Output : Speakers (Front L/R) ·Input : Analog / Output : Pre OUT(Front L/R) (※ As the input source, you can switch from DVD to other ones.)	
			4.Press [AMP] 5.Press [7/T.TONE]	②KEY7/T.TONE (Main Zone) (Initialization & Amp assign NORMAL& Input Mode Fixed ANALOG & SURROUND mode DIRECT)		
			6.Press [DVD] twice	③DVD (Main Zone)		
2	DIGITAL (signal) Path (MAIN) fig.8	Input Mode : Fixed DIGITAL Amp assign : NORMAL Display: A D U D 0 2 d B	1.Press [AMP] 2.Press [Z2] 3.Press [STANDBY]	①ZONE2 POWER OFF	·Input : Digital / Output : Speakers (Front L/R) ·Input : Digital / Output : Pre OUT(Front L/R) (※ As the input source, you can switch from DVD to other ones.)	
			4.Press [AMP] 5.Press [8/CH LVL]	②KEY8/CH LVL (Main Zone) (Initialization & Amp assign NORMAL& Input Mode Fixed DIGITAL)		
			6.Press [DVD] twice	③DVD (Main Zone)		
3	HDMI (signal) Path fig.10	Input Mode : Fixed HDMI Amp assign : NORMAL Display: A D U D 0 5 d B	1.Press [AMP] 2.Press [Z2] 3.Press [STANDBY]	①ZONE2 POWER OFF	·Input : HDMI / Output : Speakers (Front L/R) ·Input : HDMI / Output : Pre OUT(Front L/R), SW(20Hz) (※ As the input source, you can switch from DVD to other ones.)	
			4.Press [AMP] 5.Press [SURROUND]	②SURROUND (Initialization & Amp assign NORMAL & Input Mode Fixed HDMI)		
			6.Press [DVD] twice	③DVD (Main Zone)		
4	A/D (signal) Path (Main Zone) fig.11	Amp assign : NORMAL SURROUND mode : Multi ch STEREO Vol -20dB Speaker Config : SSSSY (Front/Center/Surround/SourroundBack : Small, SW : Yes) Display: A D U D 0 6 d B	1.Press [AMP] 2.Press [Z2] 3.Press [STANDBY]	①ZONE2 POWER OFF	·Input : Analog / Output : Speakers (Front L/R) ·Input : Analog / Output : Pre OUT(Front L/R), SW(20Hz) (※ As the input source, you can switch from DVD to other ones.)	
			4.Press [AMP] 5.Press [PURE DIRECT]	②PURE DIRECT (Initialization & Amp assign ZONE2 & SURROUND mode : Multi ch STEREO & ZONE2 Volume -20dB)		
			6.Press [DVD] twice	③DVD (Main Zone)		
5	Analog Audio (signal) Path (ZONE2) fig.12	Amp assign : ZONE2 ZONE2 Function : Source Zone2 Vol -20dB Display: A D U D 0 7 d B	1.Press [AMP] 2.Press [Z2] 3.Press [STANDBY]	①ZONE2 POWER OFF	·Input : Analog / Output : Speakers (SURR BACK L/R) ·Input : Analog / Output : Pre OUT(ZONE2 L/R) (※ As the input source, you can switch from DVD to other ones.)	
			4.Press [AMP] 5.Press [P2]	②P2 (Initialization & Amp assign ZONE2 & SURROUND mode : Multi ch STEREO & ZONE2 Volume -20dB)		
			6.Press [Z2] 7.Press [POWER ON]	③ZONE2 POWER ON		
			8.Press [AMP] 9.Press [DVD] twice	④DVD (Main Zone)		
6	Amp Assign (signal) Path (Amp Assign : SPKR-C) fig.13	Amp assign : BiAMP SURROUND mode : Multi ch STEREO Vol -20dB Display: A D U D 1 1 d B	1.Press [AMP] 2.Press [Z2] 3.Press [STANDBY]	①ZONE2 POWER OFF	·Input : Analog / Output : Speakers (SURR BACK L/R) (※ As the input source, you can switch from DVD to other ones.)	
			4.Press [AMP] 5.Press [DISP]	②DISPLAY (Initialization & Amp assign SPKR-C & SURROUND mode : Multi ch STEREO & Volume -20dB)		
			6.Press [DVD] twice	③DVD (Main Zone)		

	Confirmation item	Setting and display	Details of how to operate remote controller	Output sequence of remote control codes ※ It is useful to form a macro program.	Contents of confirmation	Remarks
7	Amp Assign (signal) Path (Amp Assign : Front) **fig.14**	Display: A D U D 1 2 - - - d B - - - -	1.Press [AMP] 2.Press [Z2] 3.Press [STANDBY]	①ZONE2 POWER OFF	·Input : Analog / Output : Speakers (SURR BACK L/R) (※ As the input source, you can switch from DVD to other ones.)	
			4.Press [AMP] 5.Press [SHIFT/TOP MENU]	②SHIFT/TOP MENU (Initialization & Amp assign Front B & SURROUND mode : Multi ch STEREO & Volume -20dB)		
			6.Press [DVD] twice	③DVD (Main Zone)		
8	Amp Assign (signal) Path (Amp Assign : Front Height) **fig.15**	Amp assign : Front Height SURROUND mode : Multi ch STEREO Vol -20dB Surround Parameter-Speaker : F.Height Display: A D U D 1 3 - - - d B - - - -	1.Press [AMP] 2.Press [Z2] 3.Press [STANDBY]	①ZONE2 POWER OFF	·Input : Analog / Output : Speakers (SURR BACK L/R) (※ As the input source, you can switch from DVD to other ones.)	
			4.Press [AMP] 5.Press [+10/SLEEP]	②+10/SLEEP (Main Zone) (Initialization & Amp assign Front Height & SURROUND mode : Multi ch STEREO & Volume -20dB)		
			6.Press [DVD] twice	③DVD (Main Zone)		

Personal notes:

Personal notes:

3.5. Errors checking mode (Displaying the protection history)

3.5.1. Operation specifications

Error mode (Displaying the protection history):

When the set is started up in this mode, the error information is displayed.

3.5.2. About the display on the FL display

When the "STATUS" button is pressed after the error (protection history display) mode is set, a history like the one shown below is displayed, depending on the conditions.

(1) Normal (when there has been no protection incident)

FLD	P	R	O	T	E	C	T	
		H	I	S	T	O	R	Y
	:	N	O					

(2) For ASO (when the last protection incident was ASO protection)

FLD	P	R	O	T	E	C	T	
		H	I	S	T	O	R	Y
	:	A	S	O				

Cause: The line between speaker terminals is shorted, or speakers with impedance of less than the rated value.
Supplementary information: As the excess current is detected after operation of the speaker relay, a short on the speaker terminal and the connected speaker can be identified.

If the power is turned on without correcting the abnormality, the protection function will work about 5 seconds later and the power supply will be shut off.

(3) For DC (when the last protection incident was DC protection)

FLD	P	R	O	T	E	C	T	
		H	I	S	T	O	R	Y
	:	D	C					

Cause: DC output of the power amplifier is abnormal.

If the power is turned on without correcting the abnormality, the protection function will work about 5 seconds later and the power supply will be shut off.

(4) For THERMAL (when the last protection incident was THERMAL(A) or THERMAL(B) protection)

FLD	P	R	O	T	E	C	T	
		H	I	S	T	O	R	Y
	:	T	H	M		A		

FLD	P	R	O	T	E	C	T	
		H	I	S	T	O	R	Y
	:	T	H	M		B		

Cause: The temperature of the heat sink is excessive.

If the power is turned on without correcting the abnormality, the protection function will work about 5 seconds later and the power supply will be shut off.

※ Additional causes of protection can be due to loose connections, associated components, Microprocessor, etc.

When the "STATUS" button is pressed again after the protection history as shown above is displayed, the normal display reappears.

3.5.3. Clearing the protection history

There are two ways to clear the protection history, as described below.

(1) Start up the set in error (protection display) mode and display the error, then press and hold down the "DISPLAY" button for 3 seconds.

FLD	P	R	O	T	E	C	T	
		H	I	S	T	O	R	Y
	:	D	C					

Press and hold down "DISPLAY" button for 3 seconds.

FLD	P	R	O	T	E	C	T	
		H	I	S	T	O	R	Y
		C	L	E	A	R		

The above is displayed and the protection history is cleared.

FLD	P	R	O	T	E	C	T	
		H	I	S	T	O	R	Y
	:	N	O					

(2) Initialize. (Refer to "Initializing AV Surround Receiver" 10 page.)

※ If you want to save a backup, perform the method in 2.3.(1).

Warning indication by the POWER LED

If the power is turned off when a protection incident has been detected, the POWER LED (red) flashes as a warning according to the conditions in which the protection incident occurred.

(1) ASO/DC PROTECTION : Flashes at intervals of 0.5 seconds (0.25 seconds lit, 0.25 seconds off)

(2) THERMAL (A/B) PROTECTION : Flashes at intervals of 2 seconds (1 second lit, 1 second off)

3.6. 232C standby clear mode

3.6.1. Operation specifications

232C standby clear mode:

This switches the 232C standby mode to the Normal standby mode.

Starting up:

Press the "STATUS" button while the following is displayed to switch to the Normal standby mode.

FLD	3		R	S	2	3	2	C
			R	E	S	E	T	

4. DUAL BACKUP MEMORY

This product has a Dual Backup Memory function. The conventional Backup functions to memorize, in the EEPROM (U3003) in the circuit, a current setting of the moment the main power is turned off so that it can be restored when it is turned ON again. Meanwhile, the DUAL BACKUP MEMORY is capable of memorizing any arbitrary setting that is configured while the product is in operation so as to restore it at any time. When servicing units returned from end-users for repairs, use this function to back up the current setting (e.g. Tuner Preset). This will enable the units to be returned to the users after repairs, with the setting unchanged.

NOTE: If end-users use this function, the data will be overwritten.
The contents of the memory do not disappear even if you initialize this unit.
If you want to erase, please refer to **3.2. SERVICE PRECAUTIONS**.

4.1. HOW TO OPERATE

-Backup-

(1) Configure a setting you would like to save in the MEMORY and hold down the "PRESET CH +" and "PRESET CH –" buttons on the Front Panel at the same time for 3 seconds or more.

(2) The FL Display indicates "MEMORY SAVING" while the Recovery is being performed.

FLD		M	E	M	O	R	Y
		S	A	V	I	N	G

(3) The FL Display indicates "COMPLETE" when the Backup is completed.

FLD	C	O	M	P	L	E	T	E

-Recovery-

(1) Hold down the "PRESET CH +" and "DISPLAY" buttons at the same time for 3 seconds or more.

(2) The FL Display indicates "MEMORY LOAD" while the Backup is being performed.

FLD		M	E	M	O	R	Y
		L	O	A	D		

(3) After the FL Display indicates "COMPLETE", the product goes into Standby mode. When the power is restored, the Recovery is completed.

FLD	C	O	M	P	L	E	T	E

The FL Display indicates "NO BACKUP" if the DUAL BACKUP MEMORY has not been activated with no data to be recovered saved in the Memory.

FLD		N	O				
		B	A	C	K	U	P

4.2. SERVICE PRECAUTIONS

When the Flash Rom (U3003) on the HDMI PWB is replaced make sure, in order to maintain consistency with the Backup Memory, to clear the DUAL BACKUP MEMORY in thefollowing way :

-How to clear the Backup Memory-

(1) Hold down the "SOUND MODE" and "PRESET CH –" buttons at the same time for 3 seconds or more.

(2) The FL Display indicates "BACKUP CLEAR" while the memory is being cleared.

FLD		B	A	C	K	U	P
		C	L	E	A	R	

(3) After the FL Display indicates "COMPLETE", the operation is completed.

FLD	C	O	M	P	L	E	T	E

Personal notes:

BLOCK DIAGRAM

fig.1

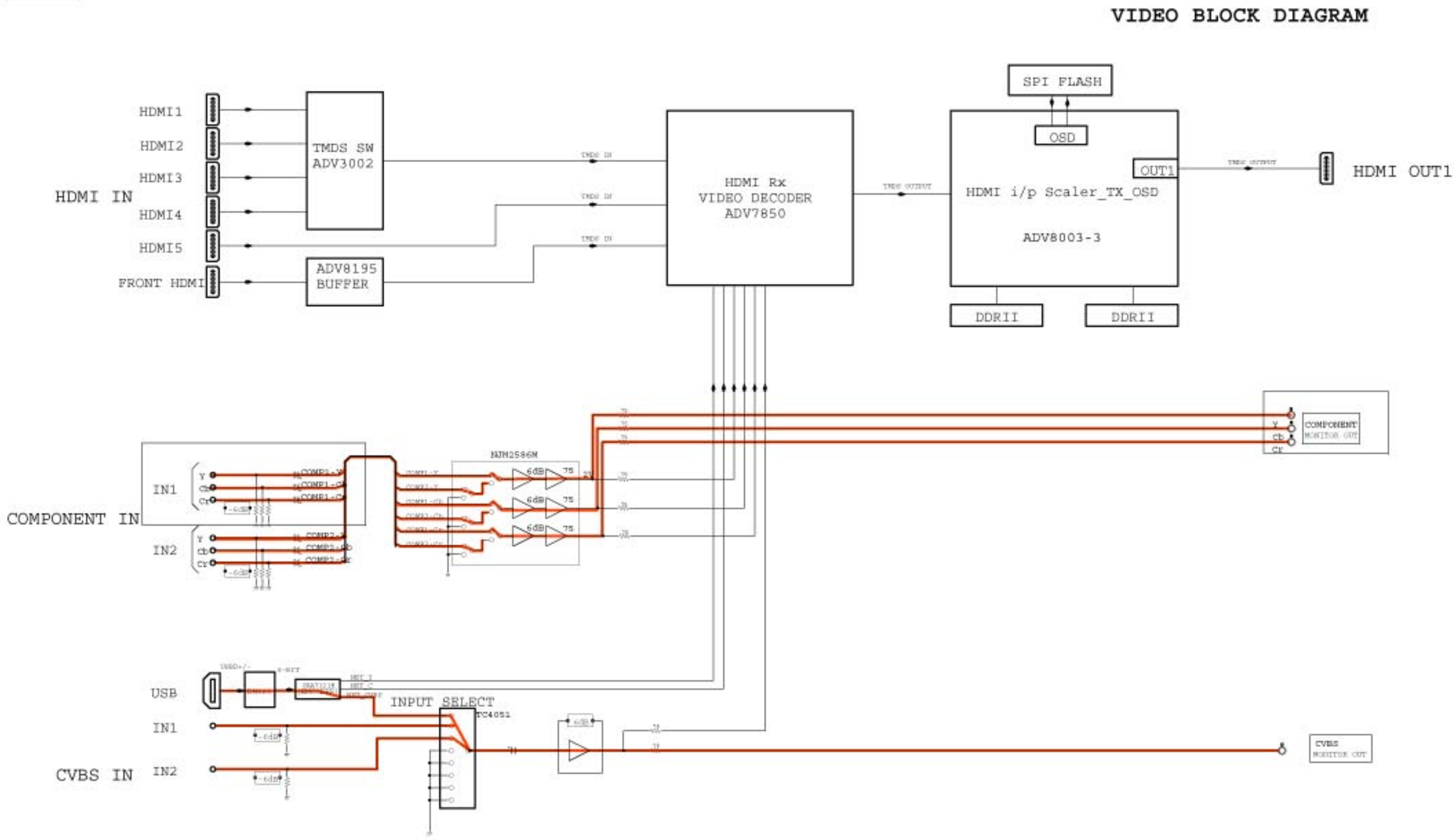

fig.2

VIDEO BLOCK DIAGRAM

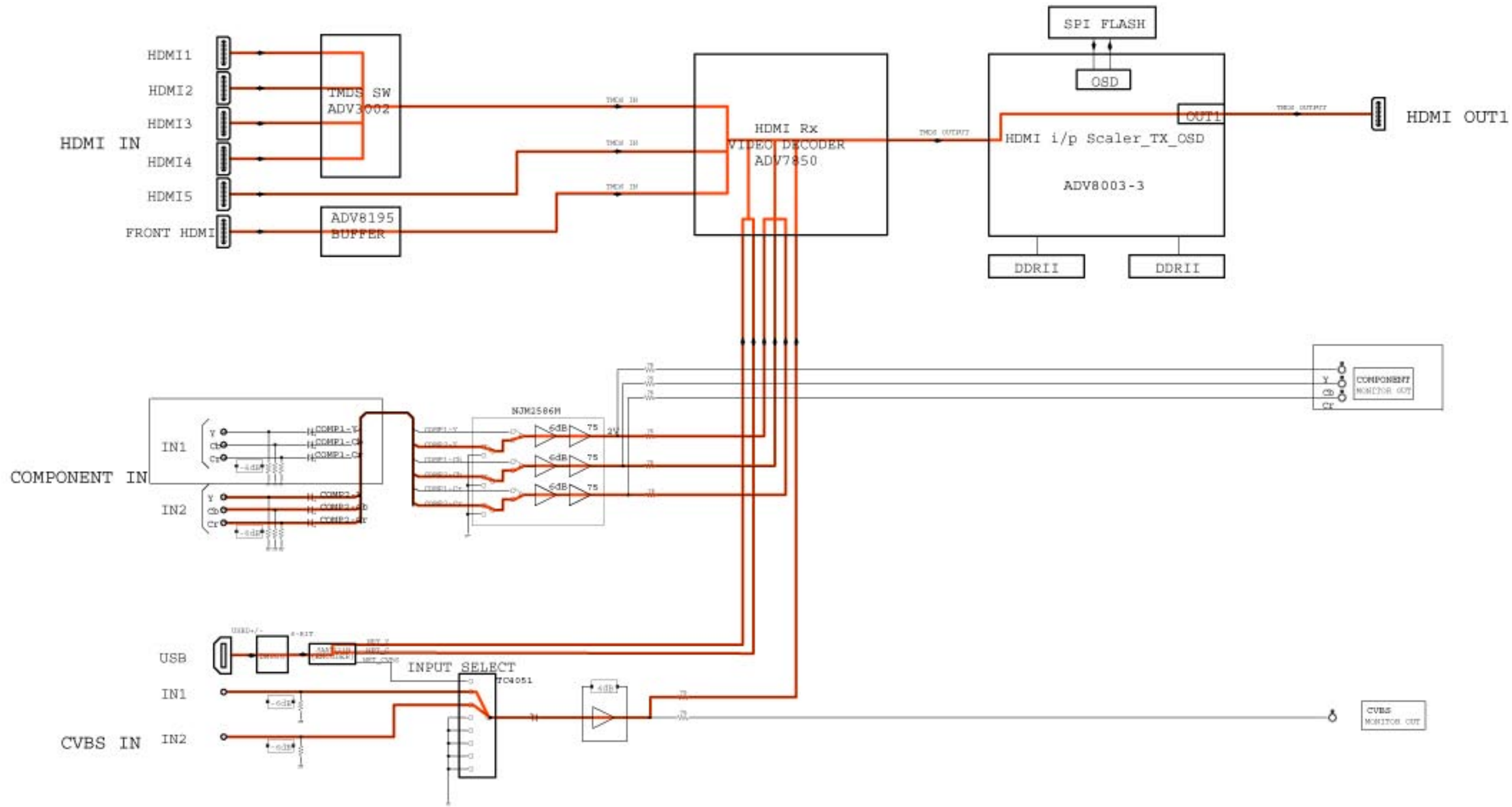

fig.3

VIDEO BLOCK DIAGRAM

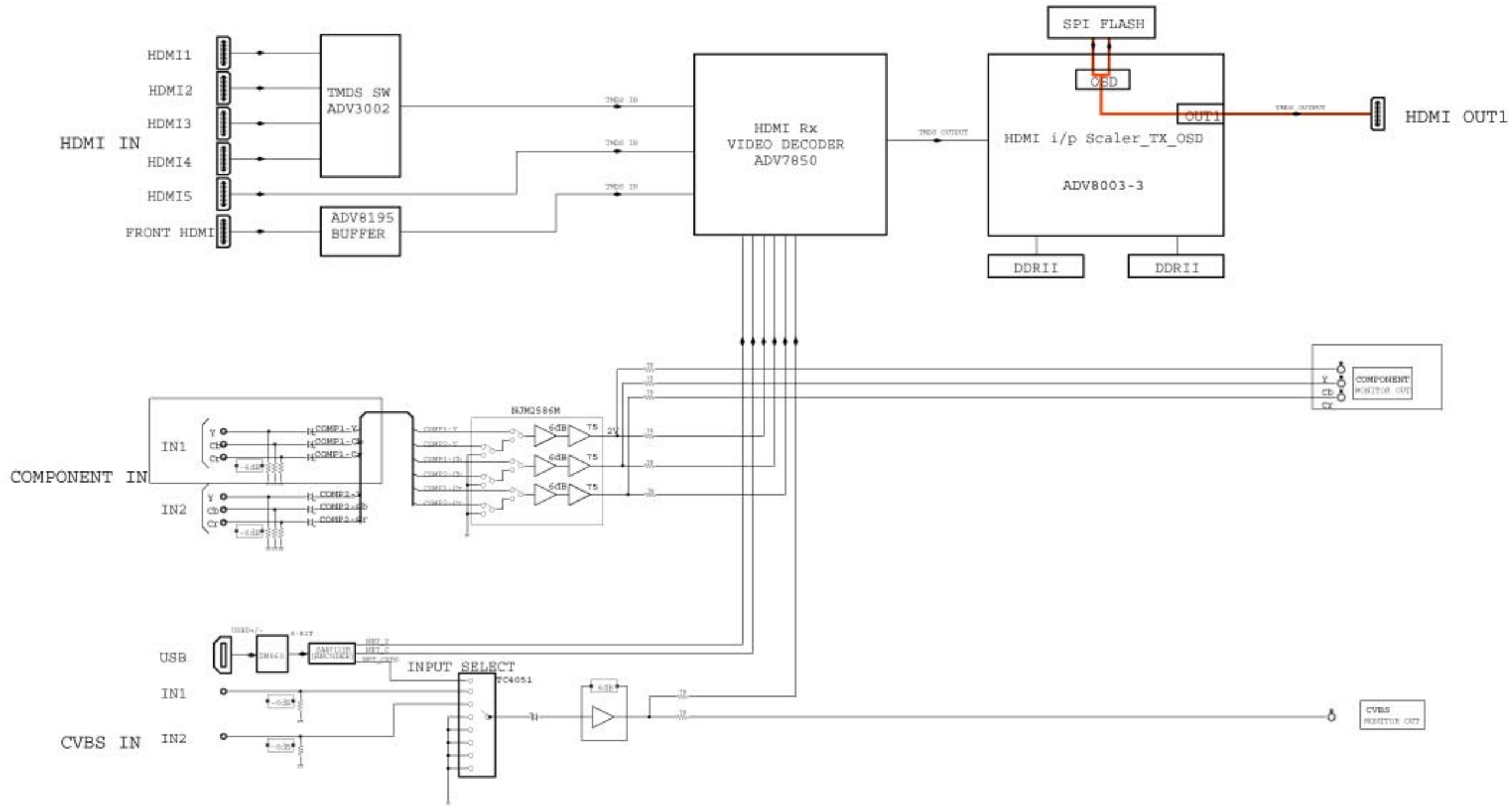

fig.4

VIDEO BLOCK DIAGRAM

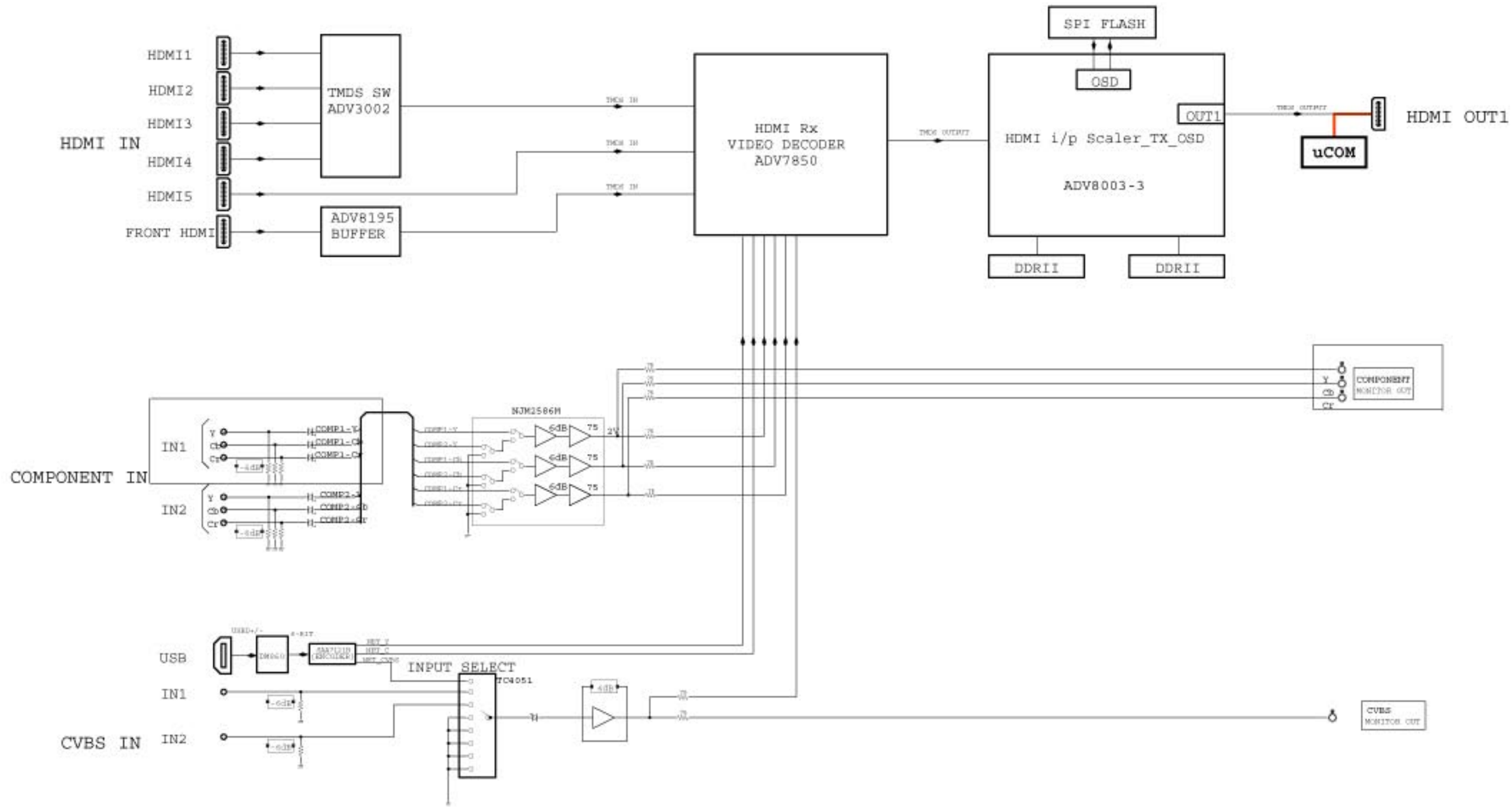

fig.5

AUDIO BLOCK DIAGRAM

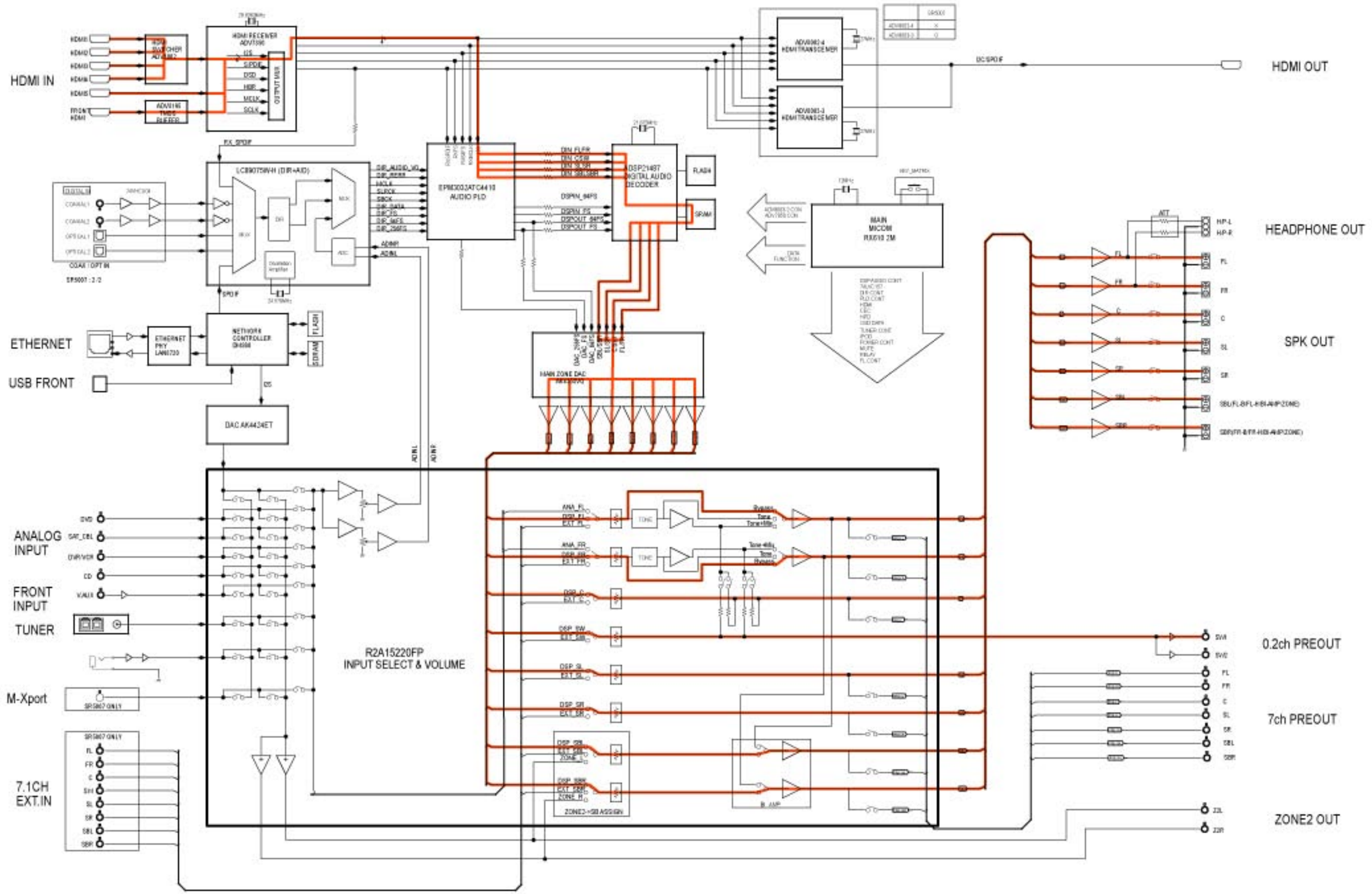

fig.6

AUDIO BLOCK DIAGRAM

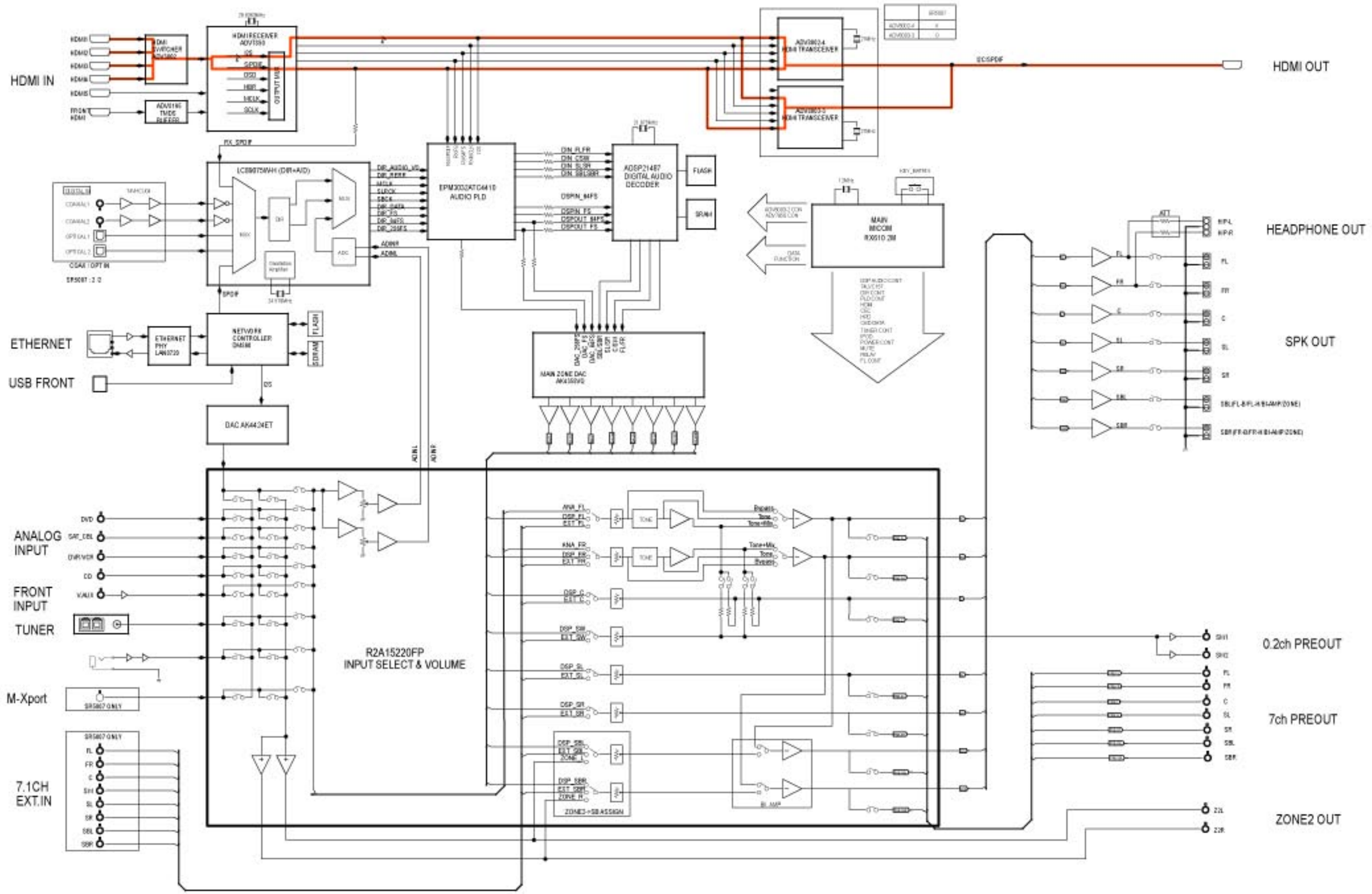

fig.7

AUDIO BLOCK DIAGRAM

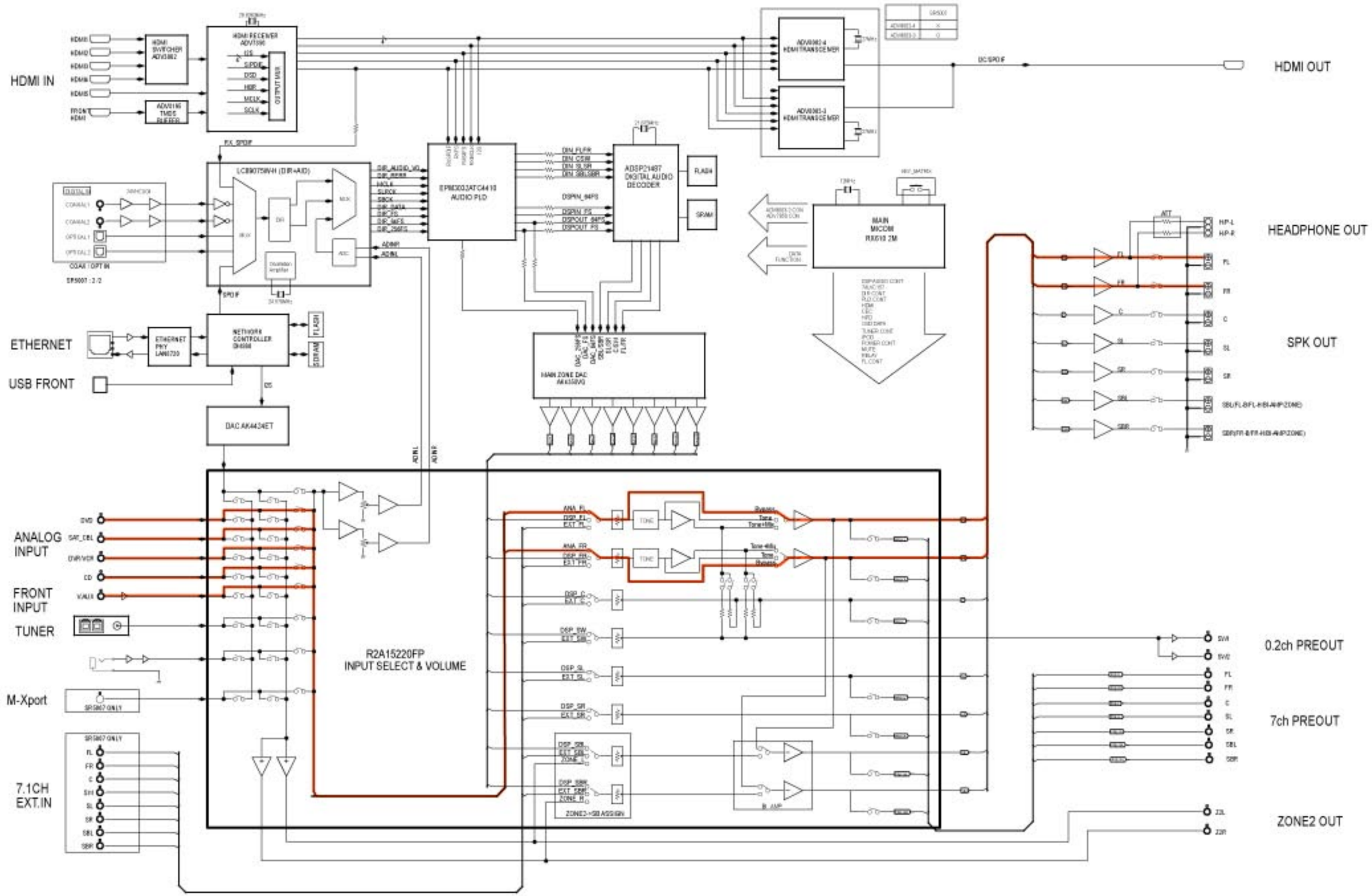

fig.8

AUDIO BLOCK DIAGRAM

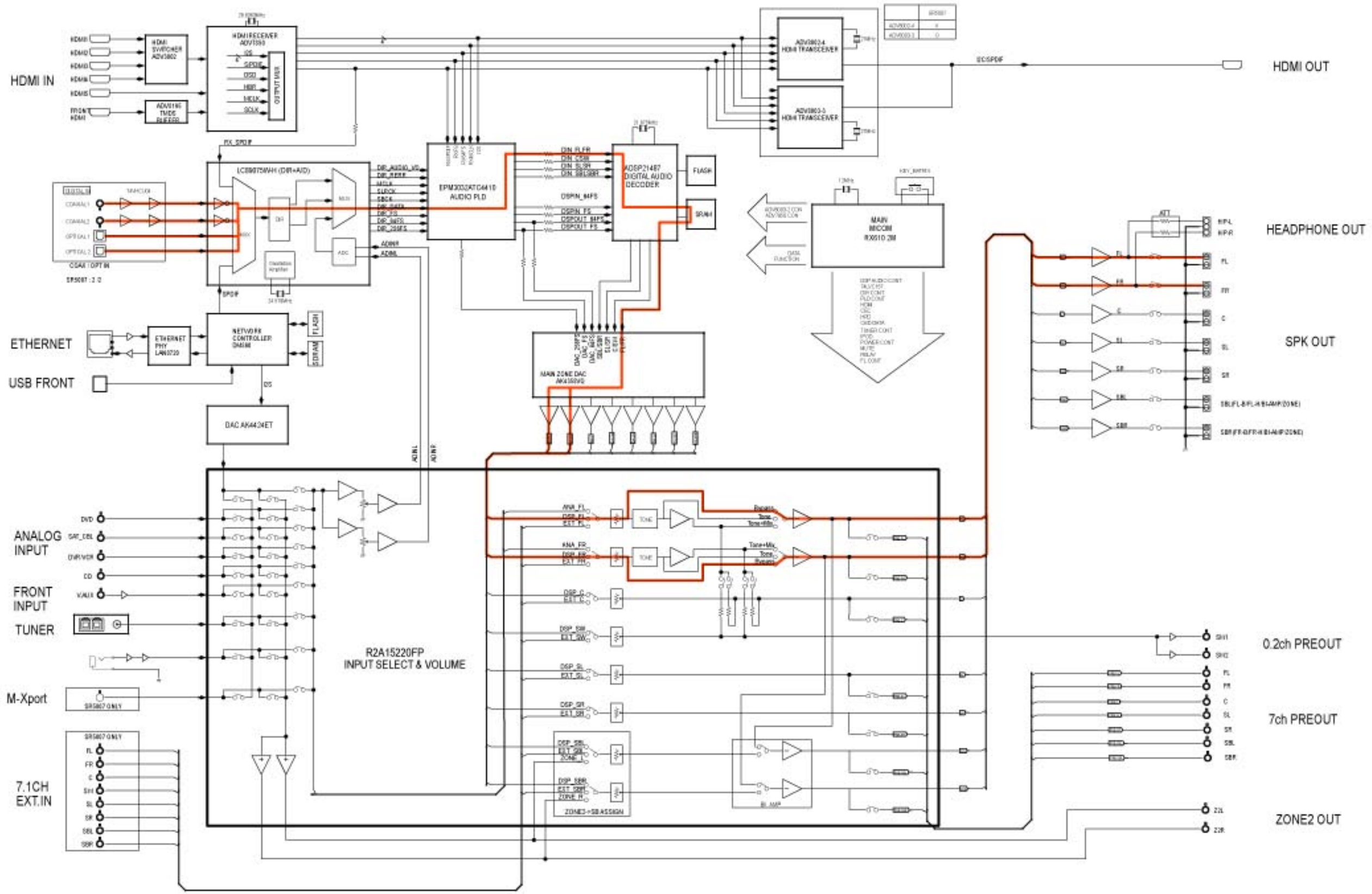

fig.9

AUDIO BLOCK DIAGRAM

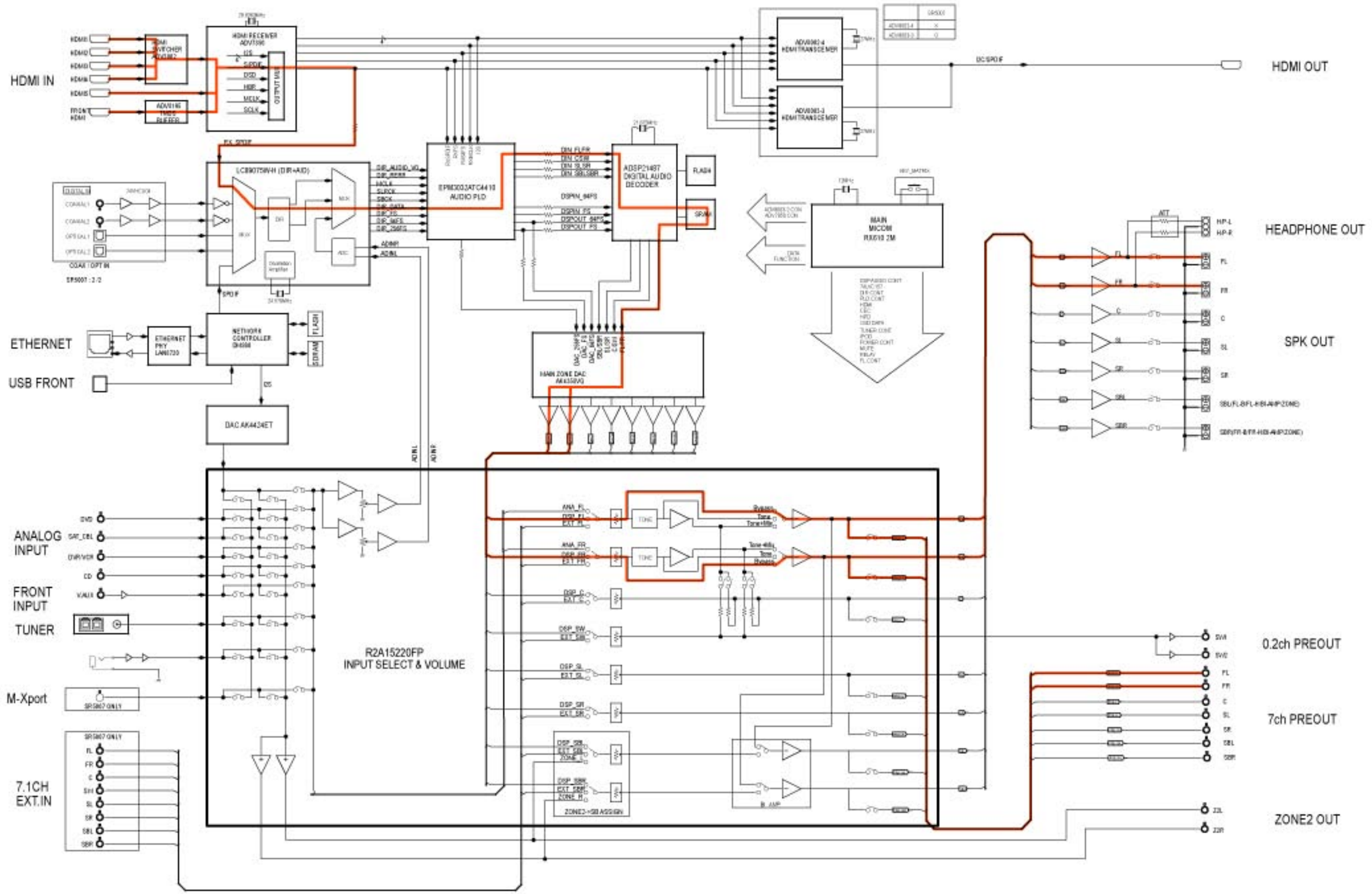

fig.10

AUDIO BLOCK DIAGRAM

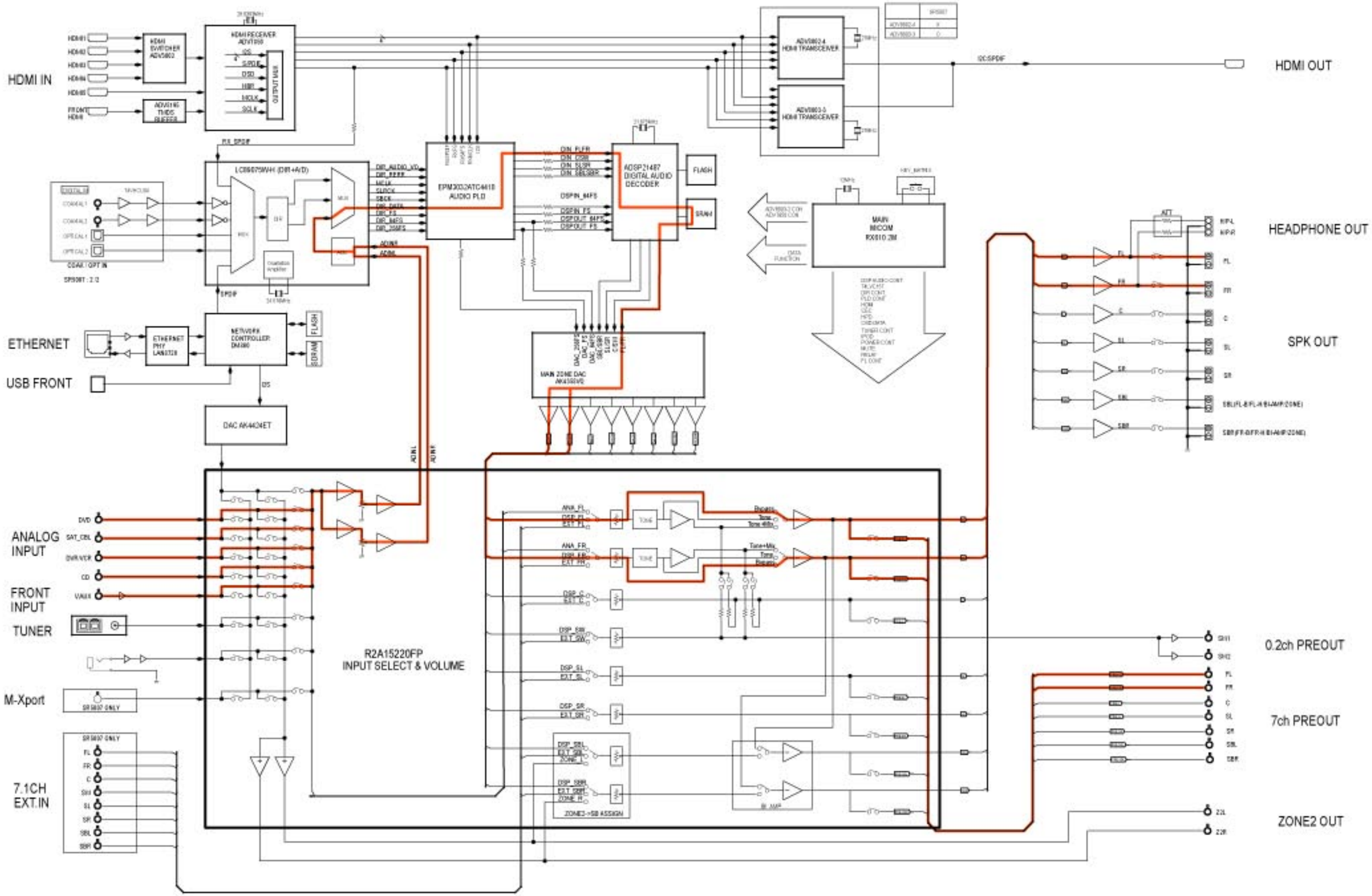

fig.11

AUDIO BLOCK DIAGRAM

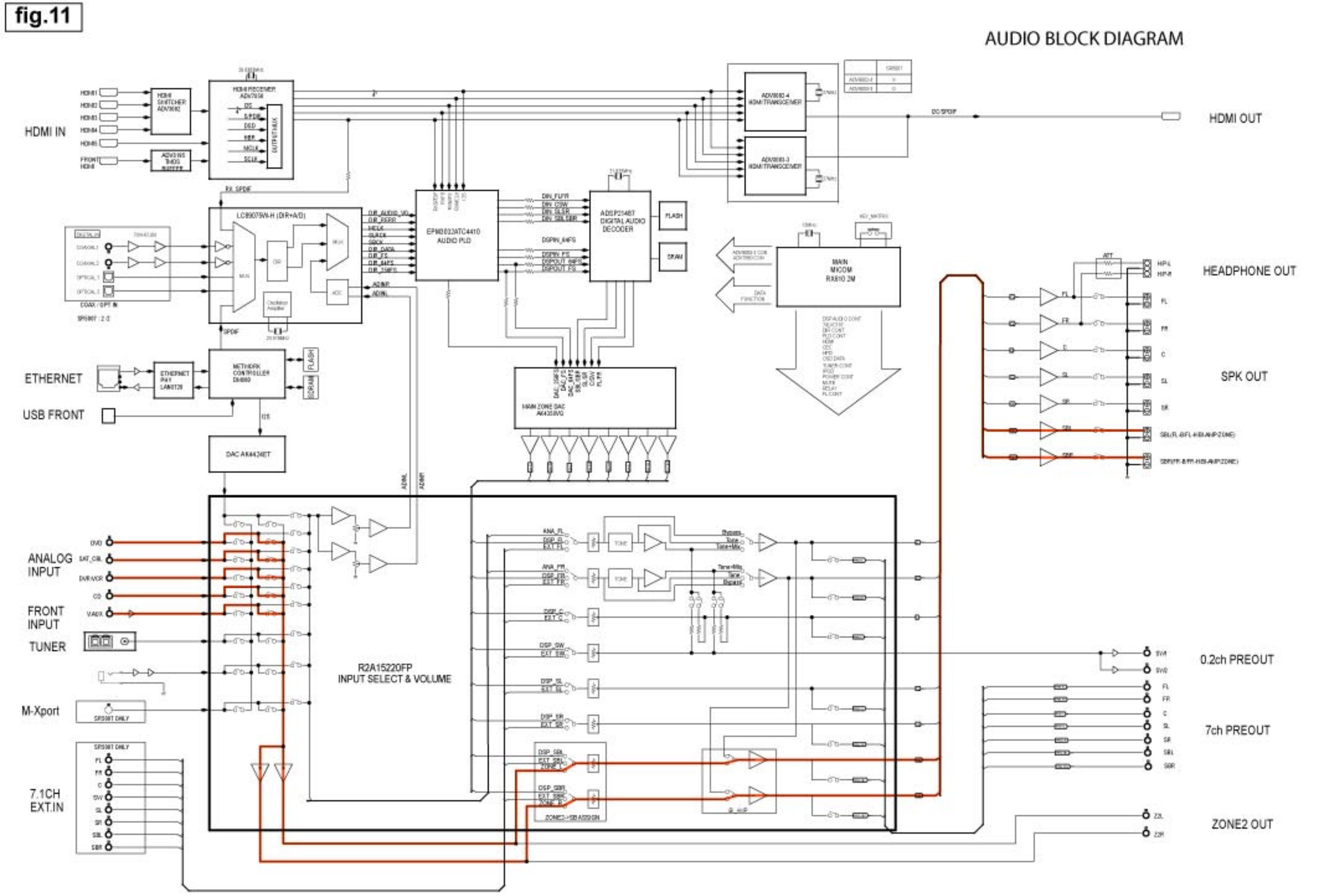

fig.12

AUDIO BLOCK DIAGRAM

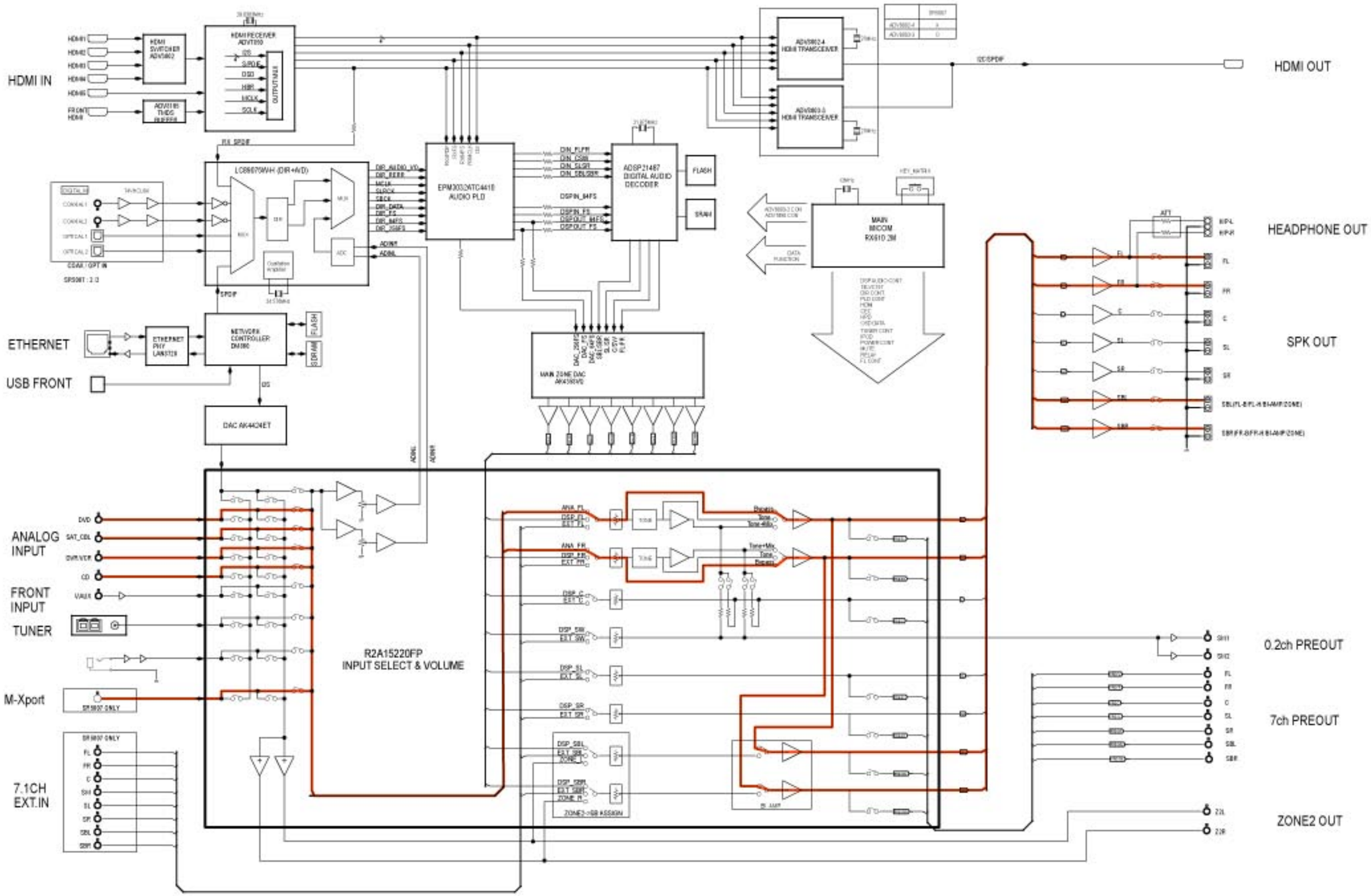

fig.13

AUDIO BLOCK DIAGRAM

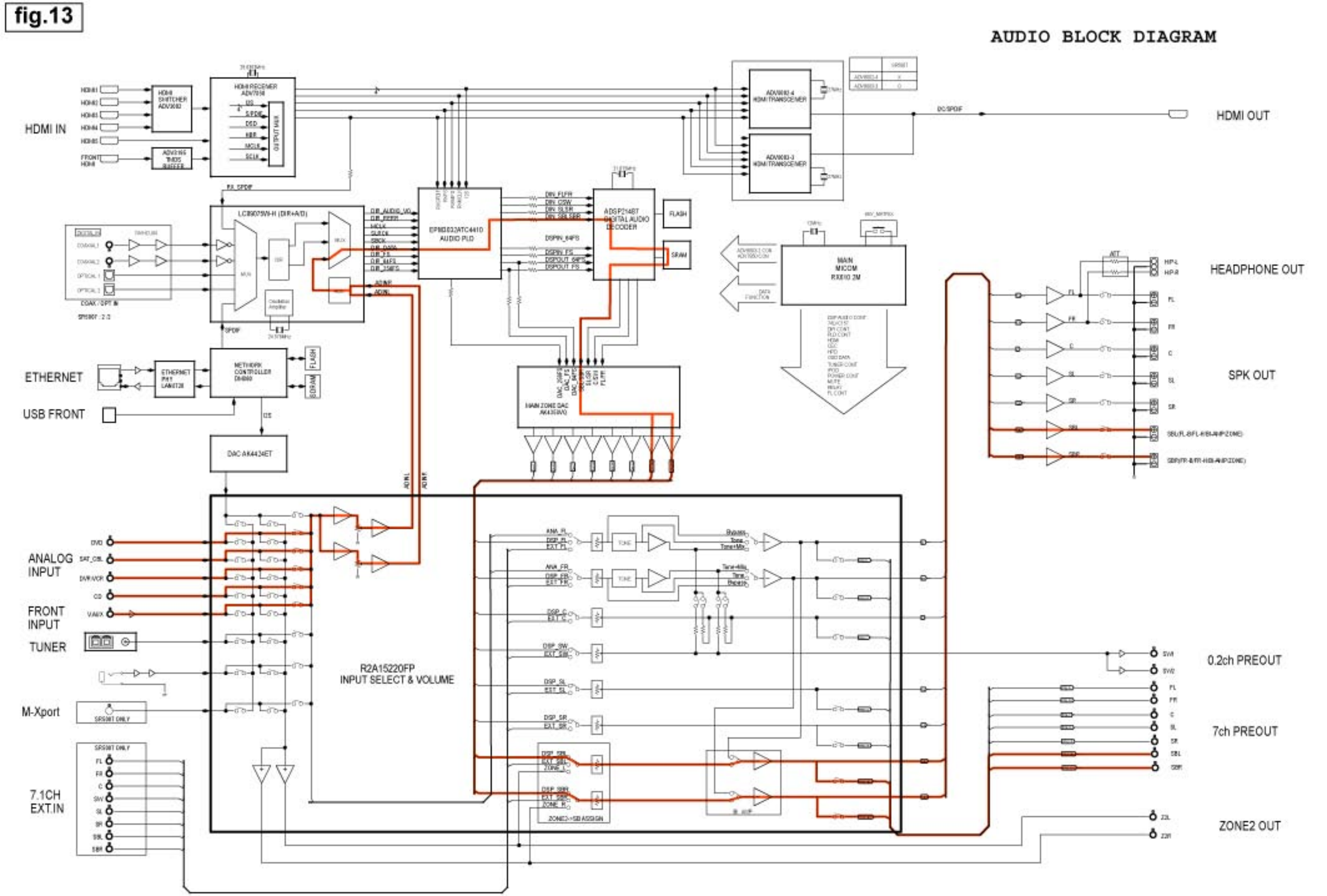

fig.14

AUDIO BLOCK DIAGRAM

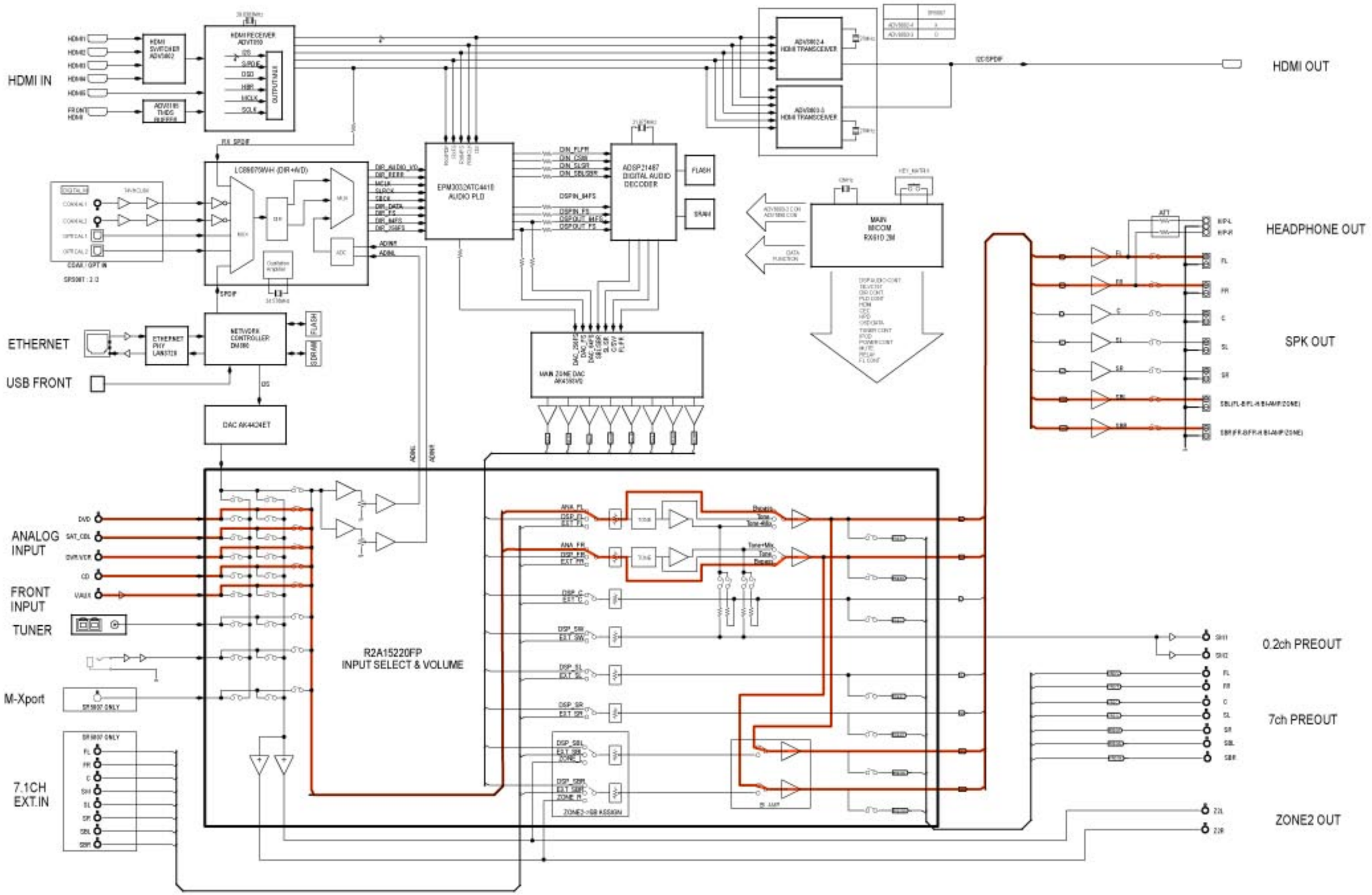

VCC DIAGRAM

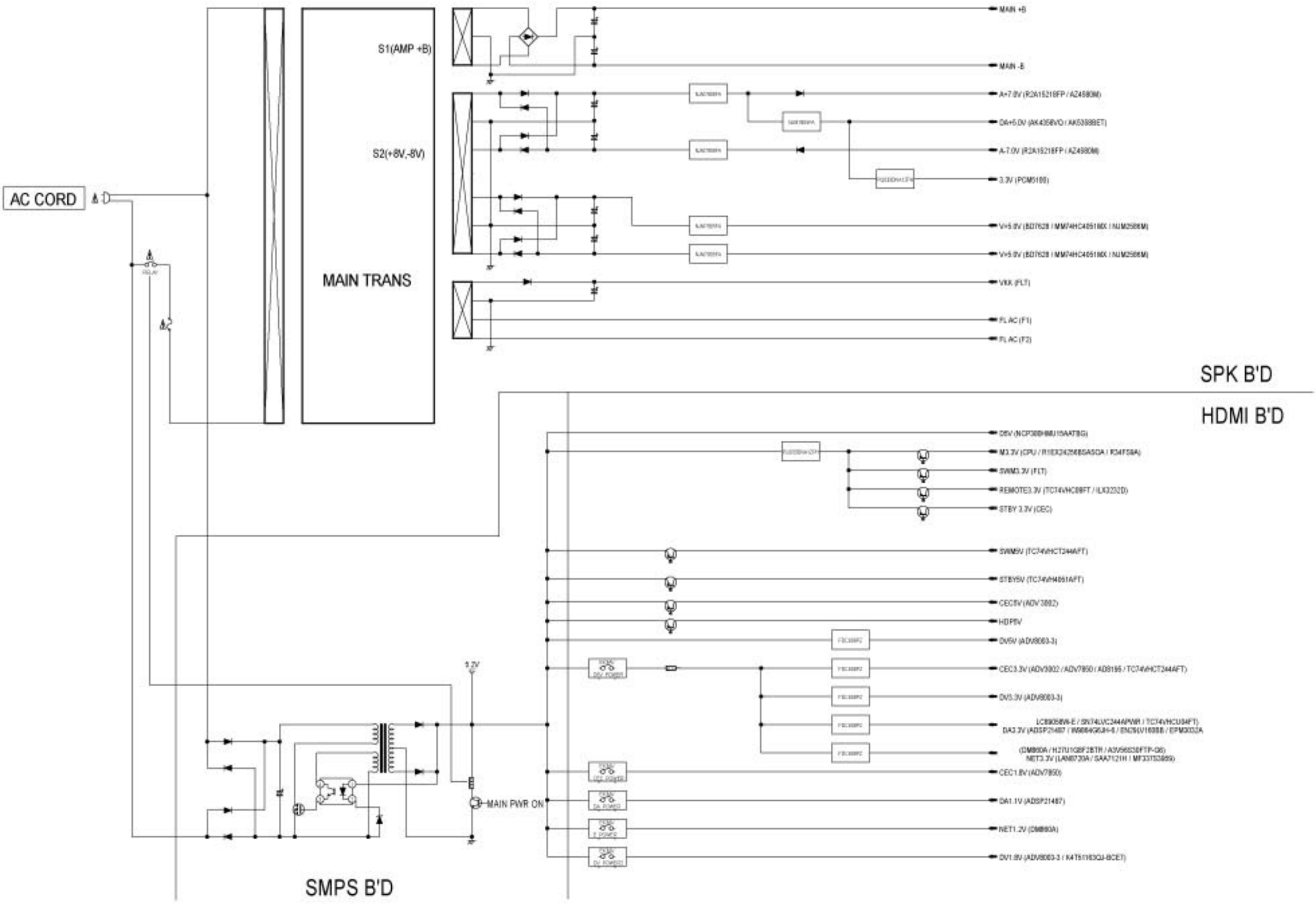
AC CORD
S1(AMP +B)
S2(+8V,-8V)
MAIN TRANS
MAIN +B
MAIN -B
A+7.0V (R2A15218FP / AZ4980M)
DA+5.0V (AK4358VD / AK5388ET)
A-7.0V (R2A15218FP / AZ4980M)
3.3V (PCM5100)
V+5.0V (BD7628 / MM74HC4051MX / NJM2588M)
V+5.0V (BD7628 / MM74HC4051MX / NJM2588M)
VMK (FLT)
FL AC (F1)
FL AC (F2)
SPK B'D
HDMI B'D
D5V (NCP380HMU15AATBG)
M3.3V (CPU / R1EX24256BSASDA / R4F56A)
SWM3.3V (FLT)
REMOTE3.3V (TC74VHC08FT / ILX3232D)
STBY 3.3V (CEC)
SWM5V (TC74VHCT244AFT)
STBY5V (TC74VH4051AFT)
CEC5V (ADV3002)
HDP5V
DV5V (ADV8003-3)
CEC3.3V (ADV3002 / ADV7850 / AD8195 / TC74VHCT244AFT)
DV3.3V (ADV8003-3)
DA3.3V (ADSP21487 / W9864G6JH-6 / EN25LV16QB / EPM3032A)
NET3.3V (LAN8720A / SAA7121H / MF33TS3859)
CEC1.8V (ADV7850)
DA1.1V (ADSP21487)
NET1.2V (DM860A)
DV1.8V (ADV8003-3 / K4T51163QJ-BCET)
5.2V
MAIN PWR ON
SMPS B'D

Personal notes:

Personal notes:

JIG FOR SERVICING

When you repair the printing board, you can use the following JIG (Extension cable kit).
Please order it from Marantz Official Service. Distributor in your region if necessary.

NOTE: The incorrect connection with in the JIG (EXTENSION UNIT KIT) may cause damage.

8U-110084S : EXTENSION UNIT KIT : 1 Set

• Connection of PCB HDMI JIG

-Preparation-

8U-110084S : EXTENSION UNIT KIT	:	1 Set
Insulation sheet (Do not supply it)	:	1 sheet
Ground lead (Do not supply it)	:	1 pc

-Procedures-

(1) Remove the screws.

(2) Disconnect the connector board and HOLDER.

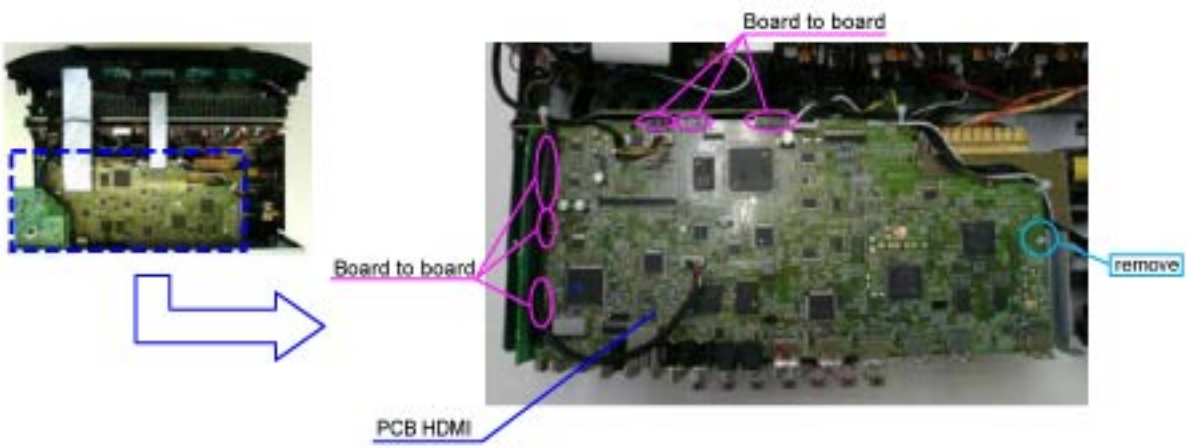

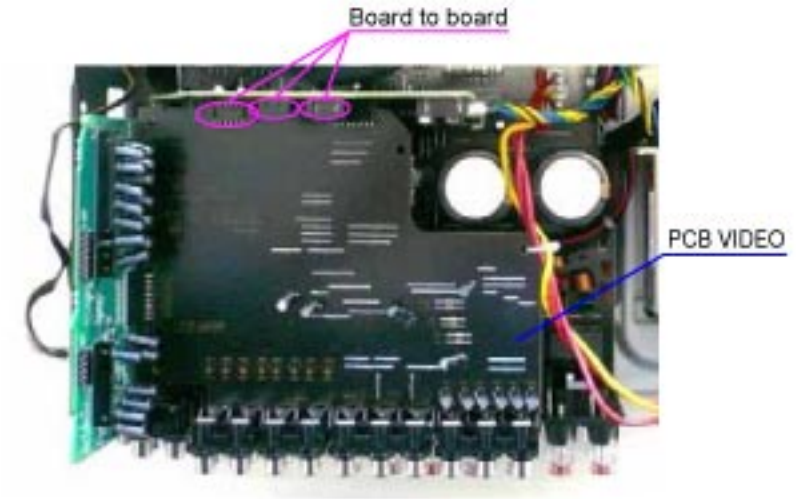

(3) Detach PCB HDMI is detached from the chassis, and turn it over.
Please put an insulation sheet that is larger than PCB HDMI under PCB.
※ Connect the ground point of PCB to the chassis with a ground lead or the like.

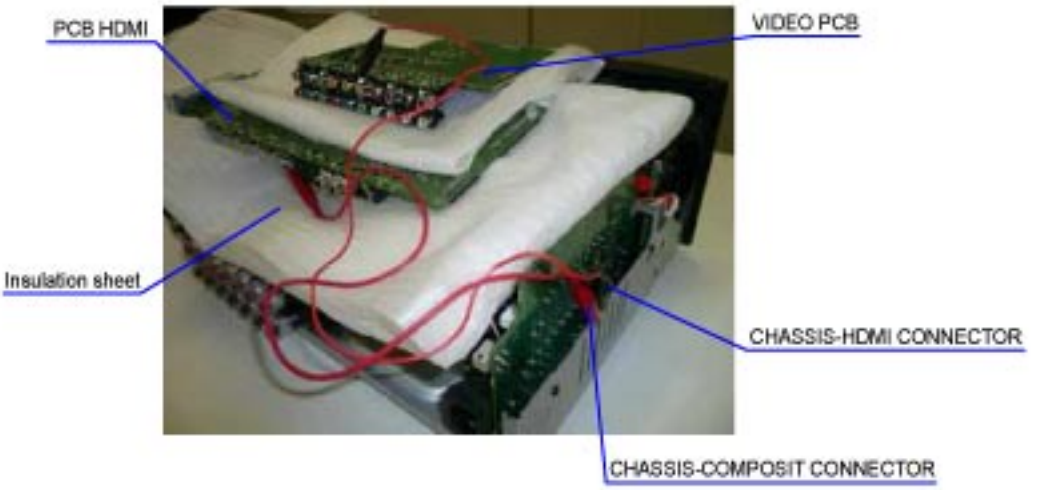

(4) Connect the six extension jig cables.

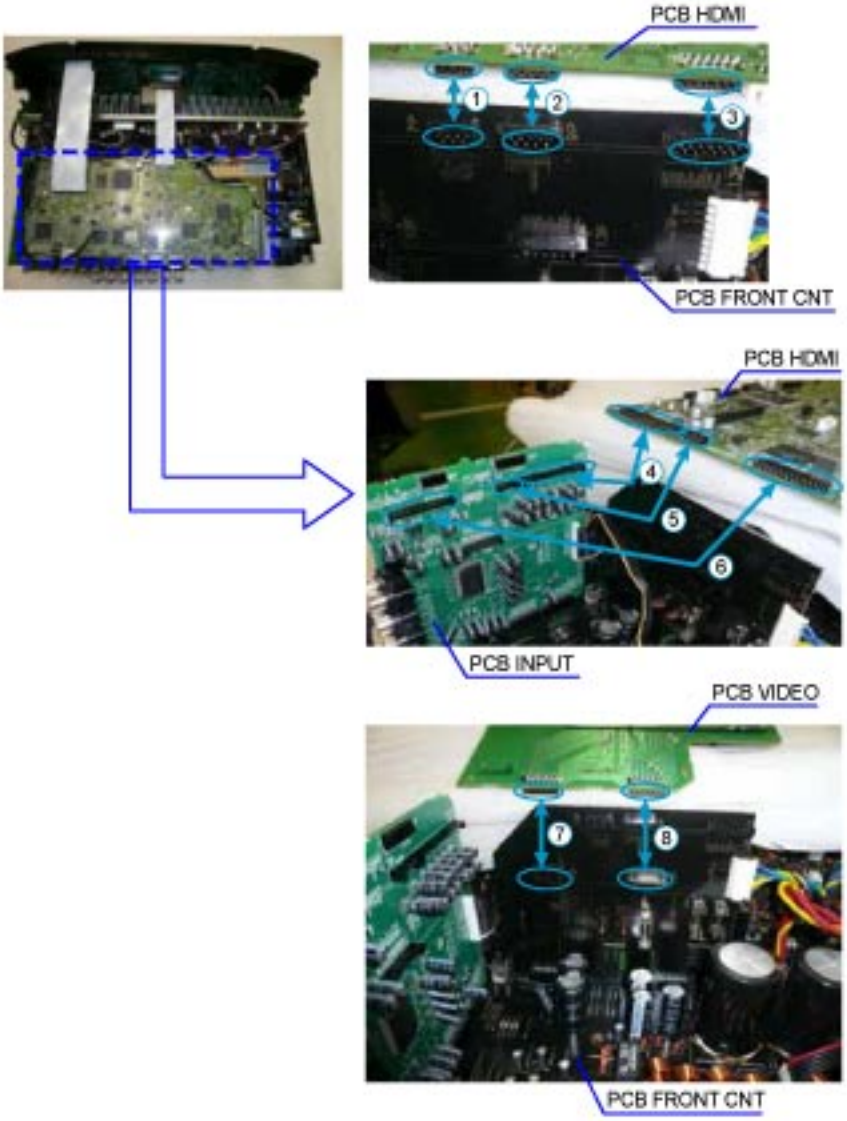

Connection table of Board to Board

No.	Pin	Ref. No.	PCB		Ref. No.	PCB
①	7pin	CP3404	FRONT CNT	⟷	N3404	HDMI
②	9pin	CP3402	FRONT CNT	⟷	N3402	HDMI
③	13pin	CP3401	FRONT CNT	⟷	N3401	HDMI
④	23pin	CP4200	INPUT PCB	⟷	N3407	HDMI
⑤	7pin	CP4203	INPUT PCB	⟷	N3406	HDMI
⑥	31pin	CP4201	INPUT PCB	⟷	N3403	HDMI
⑦	13pin	CP5001	FRONT CNT	⟷	CN5001	VIDEO
⑧	13pin	CP5000	FRONT CNT	⟷	CN5000	VIDEO

WHEN THE MICROPROCESSOR IS REPLACED WITH A NEW ONE

When the U-PRO (Microprocessor) or the Flash ROM is replaced, confirm the following.

PWB Name	Ref. No.	Description	After replaced	Remark
HDMI	U3002	R5F56108VNFP	B	SOFTWARE: Main
HDMI	U2003	EN29LV160BB-70TIP	B	SOFTWARE: DSP ROM
HDMI	U2205	EPM3032A-TC44	B	SOFTWARE: AUDIO PLD
HDMI	U1602	MX25L3206EM2I-12G	B	SOFTWARE: OSD ROM (U model)

After replacing

A : Mask ROM (With software). No need for write-in of software to the microprocessor.

B : Flash ROM (With software). Usually, no need for write-in of software. But, when the software was updated, you should write the new software on the microprocessor or flash ROM. Please check the software version.

C : Empty Flash ROM (Without software). You should write the software on the microprocessor or flash ROM. Refer to "Update procedure" or "writing procedure", when you write the software.

PROCEDURE FOR UPGRADING THE VERSION OF THE FIRMWARE

NOTE: When the following are replaced, always rewrite with updated firmware using DFW. (Refer to parts list of "HDMI PCB UNIT ASS'Y" (205 page)

- PCB HDMI ASSY
- U1602 (MX25L6406EM2I-12G)
- U2205 (EPM3032A-TC44)
- U3002 (R5F56108VNFP)
- U2003 (EN29LV160BB-70TIP)

1. How to update by DFW

1.1. Preparations before starting the operation

(1) Personal Computer (Installed "DFW_0014_SR5007_(Rev.X.X.X).exe".
(2) RS-232 cable (9P (Male), Straight).

1.2. Connection of AV receiver

(1) Confirm the power on/off switch of the AV receiver is turning off.
(2) Connect the RS-232C cable from PC with the "RS232C Terminal of AV receiver".

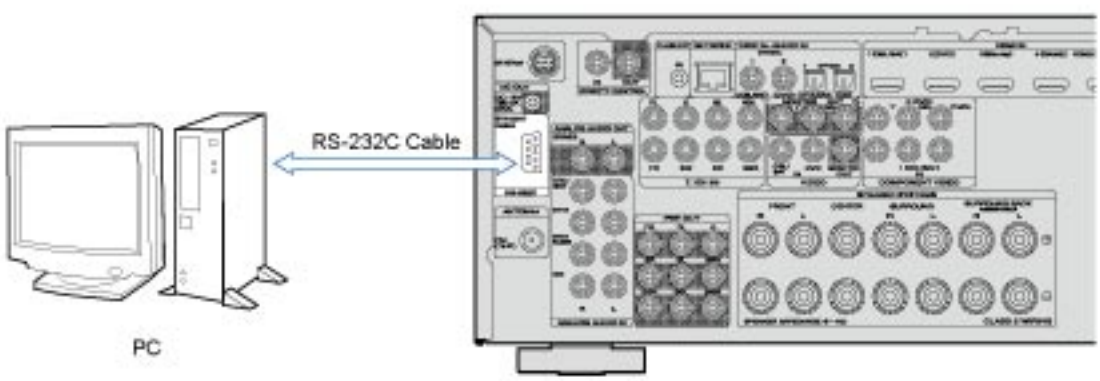

1.3. Turn on the AV receiver

Operate the following. Turn on the AV receiver.

(1) Connect the power cable to the AC outlet while simultaneously pushing the "SOUND MODE" button and the "STATUS" button of the front panel.

(2) Confirm the power indicator is green and "WRITTING" is displayed in the front panel.

1.4. Run the DFW

Run the "DFW_0014_SR5007_(Rev.X.X.X).exe" on desktop of PC.

1.5. Communication check

(1) Select the serial port number of RS-232C in PC.

(2) Click the "Check Comm." button.

(3) When connection is good, then you can see the "Communication check OK." message.

(4) If connection is not good, then you can see the "Communication check NG" message.

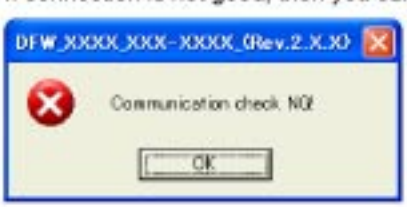

Please confirm the following

(a) Check the connection of the AV receiver and PC. (refer to "**1.2. Connection of the AV receiver**")

(b) Check the operation mode of the AV receiver. (refer to "**1.3.Turn on the AV receiver**")

(c) Check the selection of the RS-232C port number of PC.

1.6. Download the firmware

(1) Click the "Load" button.

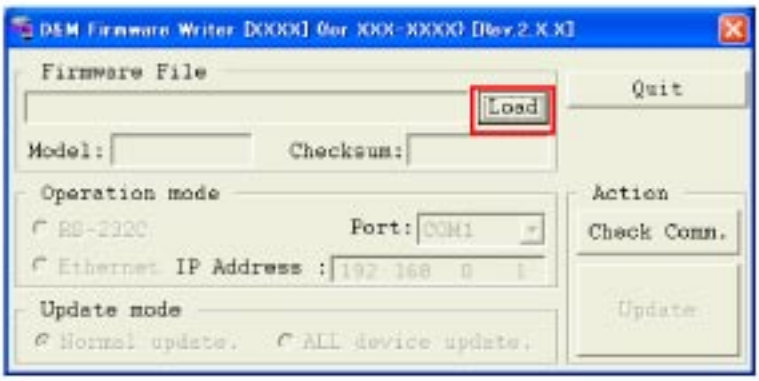

(2) Download the firmware from the specified download source to PC.

1.7. Complete the firmware updating

(1) Click the "Update" button.

(2) When writing of the firmware is completed, the power of AV receiver turns on automatically and you can see the "Update completed" message.

(3) If you can't complete the firmware update, please retry the firmware update from "1.3. Turn on the AV receiver".

1.8. Notice:

Please keep the following notice for firmware update.

(a) Keep the PC environment
(b) Avoid the communication cable from the electrical noise source.
(e.g. telephone cable, AC line, a fluorescent light)
(c) Don't remove cable during update.
(d) Don't turn off the power during update.
(e) Don't run other PC application during update.
(f) Stop the resident program on PC (Virus checker and System check utility, etc)
(g) Stop the screen saver on PC.
(h) Stop the power save ability on PC.
(i) In case of laptop PC, Use the AC adaptor.

Confirming the firmware's number after upgraded

After updating the firmware, check the version. Refer to "**1. µcom/DSP Version display mode**" (23 page).

2. How to update by DPMS

You can update the firmware by downloading the latest version from the Internet.

2.1. Connecting to the Network

(1) System requirements
- Internet Connection by Broadband Circuit
- Modem
- Router
- Ethernet cable (CAT-5 or greater recommended)

(2) Setting

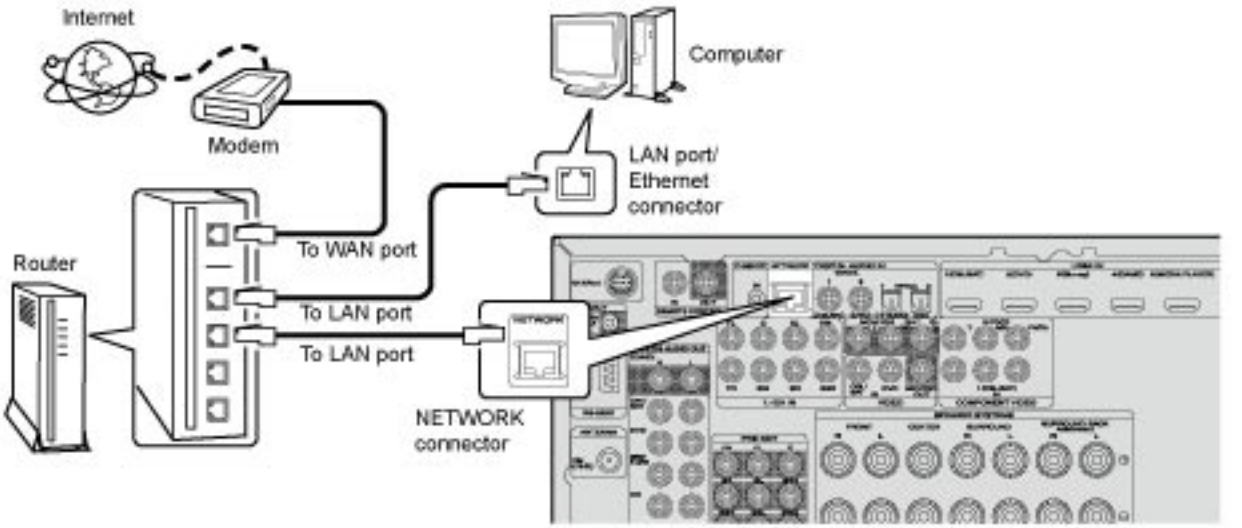

2.2. Checking and updating the firmware

Check if the latest firmware exists. You can also check approximately time required to complete an update.

(1) Press the "SETUP" button on the remote control to display the GUI menu.
(2) Use the cursor buttons to select "System Setup" → "Option Setup" → "Firmware Update" → "Check for Update".
(3) Press the "ENTER" button.
- The latest version of the firmware on the website is displayed.
- If the firmware on the website is latest, proceed to (4).
- If the latest firmware has been already installed, press the "SETUP" button to close the menu.

(4) Use the cursor buttons to select "Update", then press the "ENTER" button.
- During update, the power indicator lights in red and the GUI screen disappears. And an approximately remaining time is indicated on the display.
- When updating is complete the power indicator lights in green and normal status is resumed.

--- Cautions on Firmware Update ---

- In order to update the firmware, you must have the correct system requirements and settings for a broadband Internet connection.
- Do not turn off the power until updating is completed.
- Even with a broadband connection to the Internet, approximately 1 hour is required for the updating procedure to be completed.
  Once updating starts, normal operations on the SR5007 cannot be performed until updating is completed. Also, setting items of the GUI menu of SR5007 or setting items of the image adjustment may be initialized.
  Note down the settings before updating, and set them again after updating.

2.3. About the error code

See the table below for error codes, details of faults, and coping strategies when the firmware is updated through DPMS.

Error Code	Details of Error code	Display (Eight digits or more are the scrolling displays.)	Coping strategies
01	Log-in to DPMS failed.	Login failed 01	Reset and update again. Carry out the update in an environment that has little network load.
02	Line, etc., is busy when logging into DPMS.	Server is busy 02	Carry out the update in an environment that has little network load.
03	Connection to DPMS failed.	ConnectionFail 03	Check the network connection. Carry out the update in an environment that has little network load.
04	Firmware file data was requested but error message was received.	ConnectionFail 04	Check the network connection. Carry out the update in an environment that has little network load.
05	Firmware file data was requested but it timed out.	ConnectionFail 05	Check the network connection. Carry out the update in an environment that has little network load.
06	Firmware file data was requested but error message was received.	ConnectionFail 06	Check the network connection. Carry out the update in an environment that has little network load.
07	All firmware file data was requested but it timed out.	ConnectionFail 07	Check the network connection. Carry out the update in an environment that has little network load.
08	Firmware file data of Main CPU was requested but error message was received.	ConnectionFail 08	Check the network connection. Carry out the update in an environment that has little network load.
09	Firmware file data of Main CPU was requested but it timed out.	ConnectionFail 09	Check the network connection. Carry out the update in an environment that has little network load.
0A	Error (NG) message was received when firmware of Main CPU was downloaded.	Download fail 0A	Check the network connection. Carry out the update in an environment that has little network load.
0B	Error (line congestion) message was received when firmware of Main CPU was downloaded.	Download fail 0B	Check the network connection. Carry out the update in an environment that has little network load.
0C	Error (connection failure) message was received when firmware of Main CPU was downloaded.	Download fail 0C	Check the network connection. Carry out the update in an environment that has little network load.
0D	Received Package Version is wrong.	Connection fail 0D	Check the network connection. Carry out the update in an environment that has little network load.
0E	Connection to DPMS failed. (can not get NTP)	Connection fail 0E	Check the network connection. Carry out the update in an environment that has little network load.
10	Main CPU failed to receive firmware for rewriting sent from DM880A (when timed out).	Main 10 Updating failed	Turn off and on the power. Updating starts automatically.

Error Code	Details of Error code	Display (Eight digits or more are the scrolling displays.)	Coping strategies
11	Main CPU failed to receive firmware for rewriting sent from DM860A (when an error occurred).	Main 11 Updating failed	Turn off and on the power. Updating starts automatically.
12	There was invalid data in the firmware for rewriting sent from DM860A to Main CPU (when a Check Sum error occurred).	Main 12 Updating failed	Turn off and on the power. Updating starts automatically.
13	The deletion of block data failed before Main CPU was rewritten.	Main 13 Erase failed	Turn off and on the power. Updating starts automatically.
14	The rewriting of block data failed when Main CPU was rewritten.	Main 14 Updating failed	Turn off and on the power. Updating starts automatically.
15	The data verification was invalid after Main CPU was rewritten.	Main 15 Update CheckNG	Turn off and on the power. Updating starts automatically.
20	Failure to acquire (Boot Loader Mode) IP address before rewriting DM860A (AutoIP).	Connection fail 20	Check the network connection. Carry out the update in an environment that has little network load.
21	Failure to acquire (Boot Loader Mode) IP address before rewriting DM860A (when timed out).	Connection fail 21	Check the network connection. Carry out the update in an environment that has little network load.
22	Log-in to DPMS failed.	Login failed 22	Reset and update again. Carry out the update in an environment that has little network load.
23	Line, etc., is busy when logging into DPMS.	Server is busy 23	Carry out the update in an environment that has little network load.
24	Connection to DPMS failed.	Connection fail 24	Check the network connection. Carry out the update in an environment that has little network load.
25	Mode change failure of DM860A.	Connection fail 25	Reset and update again.
26	Data acquisition failed (timed out) when firmware of Main CPU was downloaded. Received Package Version is wrong.	Download fail 26	Check the network connection. Carry out the update in an environment that has little network load.
27	Mode change failure of DM860A.	Connection fail 27	Reset and update again.
36	Log-in to DPMS failed when Main CPU was rewritten.	Main 36 Login failed	Carry out the update in an environment that has little network load.
37	Line, etc., is busy when logging into DPMS when Main CPU was rewritten.	Main 37 Server is busy	Carry out the update in an environment that has little network load.

Error Code	Details of Error code	Display (Eight digits or more are the scrolling displays.)	Coping strategies
38	Connection to DPMS failed when Main CPU was rewritten.	Main 38 Connect failed	Check the network connection. Carry out the update in an environment that has little network load.
39	Connection to DPMS timed out when Main CPU was rewritten.	Main 39 Connect failed	Check the network connection. Carry out the update in an environment that has little network load.
3A	Error (NG) message was received when firmware was downloaded or Main CPU was rewritten.	Main 3A Download failed	Turn off and on the power. Updating starts automatically. Carry out the update in an environment that has little network load.
3B	Error (line congestion) message received when downloading firmware when Main CPU was rewritten.	Main 3B Download failed	Turn off and on the power. Updating starts automatically. Carry out the update in an environment that has little network load.
3C	Error (connection failure) message received when downloading firmware when Main CPU was rewritten.	Main 3C Download failed	Turn off and on the power. Updating starts automatically. Carry out the update in an environment that has little network load.
3D	Failure to acquire (Boot Loader Mode) IP address before rewriting DM860A (AutoIP).	Main 3D Connect failed	Check the network connection. Carry out the update in an environment that has little network load.
3E	Failure to acquire (Boot Loader Mode) IP address before rewriting DM860A (when timed out).	Main 3E Connect failed	Check the network connection. Carry out the update in an environment that has little network load.
50	Log-in to DPMS failed when firmware such as DSP and PLD was rewritten.	DSP 50 Login failed	Carry out the update in an environment that has little network load.
51	Line, etc., is busy when the log-in to DPMS when firmware such as DSP and PLD was rewritten.	DSP 51 Server is busy	Carry out the update in an environment that has little network load.
52	Connection to DPMS failed when firmware such as DSP and PLD was rewritten.	DSP 52 Connect failed	Check the network connection. Carry out the update in an environment that has little network load.
54	Error message received regarding firmware data after the log-in to DPMS when firmware such as DSP and PLD was rewritten.	DSP 54 Updating failed	Turn off and on the power. Updating starts automatically. Carry out the update in an environment that has little network load.
55	When firmware such as DSP and PLD was rewritten, request was made for firmware data after the log-in to DPMS, but it timed out.	DSP 55 Updating failed	Turn off and on the power. Updating starts automatically. Carry out the update in an environment that has little network load.
56	Downloading firmware failed after the log-in to DPMS when firmware such as DSP and PLD was rewritten.	DSP 56 Download failed	Turn off and on the power. Updating starts automatically. Carry out the update in an environment that has little network load.
57	Firmware download error received (line congestion) after the log-in to DPMS when firmware such as DSP and PLD was rewritten.	DSP 57 Download failed	Turn off and on the power. Updating starts automatically. Carry out the update in an environment that has little network load.

Error Code	Details of Error code	Display (Eight digits or more are the scrolling displays.)	Coping strategies
58	Firmware download error received (connection failure) after the log-in to DPMS when firmware such as DSP and PLD was rewritten.	DSP 58 Download failed	Turn off and on the power. Updating starts automatically. Carry out the update in an environment that has little network load.
5A	NACK was received when "C" command sent to DSP, PLD etc.	DSP 5A Connect failed	Turn off and on the power. Updating starts automatically.
5B	NACK was received when "L" command sent to DSP, PLD etc.	DSP 5B Updating failed	Turn off and on the power. Updating starts automatically.
5C	DSP, PLD etc. failed to receive firmware for rewriting sent from DM860A (when timed out).	DSP 5C Updating failed	Turn off and on the power. Updating starts automatically.
5D	DSP, PLD etc. failed to receive firmware for rewriting sent from DM860A (when an error occurred).	DSP 5D Updating failed	Turn off and on the power. Updating starts automatically.
5E	Data in firmware such as DSP and PLD for rewriting sent from DM860A was invalid (when a Check Sum error occurred).	DSP 5E Updating failed	Turn off and on the power. Updating starts automatically.
5F	Invalid data in firmware such as DSP and PLD for rewriting sent from DM860A was invalid (invalid data was received).	DSP 5F Updating failed	Turn off and on the power. Updating starts automatically.
60	NACK was received when "P" command sent to DSP, PLD etc.	DSP 60 Updating failed	Turn off and on the power. Updating starts automatically.
61	NACK was received when "I" command sent to DSP, PLD etc.	DSP 61 Update CheckNG	Turn off and on the power. Updating starts automatically.
80	Acquisition of serial flash data failed before serial flash was deleted.	GUI 80 Updating failed	Turn off and on the power. Updating starts automatically.
81	Deleting data failed before serial flash was rewritten.	GUI 81 Updating failed	Turn off and on the power. Updating starts automatically.
82	Receiving firmware for rewriting serial flash sent by DM860A failed (when timed out).	GUI 82 Updating failed	Turn off and on the power. Updating starts automatically.
83	Receiving firmware for rewriting serial flash sent by DM860A failed (when an error).	GUI 83 Updating failed	Turn off and on the power. Updating starts automatically.
84	Receiving firmware for rewriting serial flash sent by DM860A failed (when a Check Sum error).	GUI 84 Updating failed	Turn off and on the power. Updating starts automatically.

Error Code	Details of Error code	Display (Eight digits or more are the scrolling displays.)	Coping strategies
85	Receiving firmware for rewriting serial flash sent by DM860A failed (when invalid data was received).	GUI 85 Updating failed	Turn off and on the power. Updating starts automatically.
86	The data verification was invalid after serial flash was rewritten.	GUI 86 Updating failed	Turn off and on the power. Updating starts automatically.
A0	Acquisition of (Application Mode) IP address failed before DM860A was rewritten (AutoIP).	EIMG A0 Connect failed	Check the network connection. Carry out the update in an environment that has little network load.
A1	Acquisition of (Application Mode) IP address failed before DM860A was rewritten (when timed out).	EIMG A1 Connect failed	Check the network connection. Carry out the update in an environment that has little network load.
A2	Invalid login via DPMS access was notified when DM860A related firmware was rewritten (Application Mode).	EIMG A2 Login failed	Check the network connection. Carry out the update in an environment that has little network load.
A3	Line congestion via DPMS access was notified when DM860A related firmware was rewritten (Application Mode).	EIMG A3 Server is busy	Check the network connection. Carry out the update in an environment that has little network load.
A4	Connection failure via DPMS access was notified when DM860A related firmware was rewritten (Application Mode).	EIMG A4 Connect failed	Check the network connection. Carry out the update in an environment that has little network load.
A6	Firmware data error message was received after DPMS login when DM860A related firmware was rewritten (Application Mode).	EIMG A6 Updating failed	Turn off and on the power. Updating starts automatically. Carry out the update in an environment that has little network load.
A7	When DM860A related firmware was rewritten (Application Mode), request was made for firmware data after DPMS login but it timed out.	EIMG A7 Updating failed	Turn off and on the power. Updating starts automatically. Carry out the update in an environment that has little network load.
AE	Firmware download error message received (when download fails) when DM860A related firmware was rewritten (Boot Loader Mode).	EIMG AE Download failed	Turn off and on the power. Updating starts automatically. Carry out the update in an environment that has little network load.
AF	Firmware download error message received (line congestion) when DM860A related firmware was rewritten (Boot Loader Mode).	EIMG AF Download failed	Turn off and on the power. Updating starts automatically. Carry out the update in an environment that has little network load.
B0	Firmware download error message received (connection failure) when DM860A related firmware was rewritten (Boot Loader Mode).	EIMG B0 Download failed	Turn off and on the power. Updating starts automatically. Carry out the update in an environment that has little network load.
B1	DM860A related firmware download error message. (Timeout failure)	EIMG B1 Download failed	Turn off and on the power. Updating starts automatically. Carry out the update in an environment that has little network load.
B2	Error message received when DM860A related firmware was rewritten.	EIMG B2 Updating failed	Turn off and on the power. Updating starts automatically. Carry out the update in an environment that has little network load.

Error Code	Details of Error code	Display (Eight digits or more are the scrolling displays.)	Coping strategies
B3	Firmware writing error message. (Timeout failure)	EIMG B3 Updating failed	Turn off and on the power. Updating starts automatically. Carry out the update in an environment that has little network load.
B4	Mode change failure of DM860A. (Boot Loader Mode)	EIMG B4 Updating failed	Reset and update again.
B5	Mode change failure of DM860A. (Application Mode)	EIMG B5 Updating failed	Reset and update again.

Device display during firmware update

Display of target device during firmware update.

Target device	Display	Error code when an error occurs
Main	Main ***min ***%	08 - 0C 10 - 15 22 - 24 36 - 3E
Audio PLD	APLD ***min ***%	50 - 52 54 - 58 5A - 61
DSP	DSP ***min ***%	50 - 52 54 - 58 5A - 61
GUI Serial Flash	GUI ***min ***%	50 - 52 54 - 58 5A - 61 80 - 86
DM860A Boot Loader	ESBL ***min *****	A0 - A4 A6 - A7 AE - B5
DM860A Image	EIMG ***min *****	A0 - A4 A6 - A7 AE - B5
DM860A Image (Emergency Mode)	Update Retry	–

3. How to update by USB Memory

You can update the firmware by downloading the latest version with USB Memory.

3.1. Connecting to the Network

(1) Requirements

- USB Memory capacity : FAT16 : 2 GB, FAT32 : 2 TB
- USB memory devices will not work via a USB hub.
- It is not possible to use this unit by connecting the unit's USB port to a PC via a USB cable.
- Do not use an extension cable when connecting a USB memory device.
  This may cause radio interference.

Place the USB update File in an appropriate folder. The folder name should be the Product ID based on the Model name/area.

Model Name	Model Area	Product ID
SR5007	North America (U)	100100140100
	Europe (N)	100100140200
	China (K)	100100140200

(2) Setting

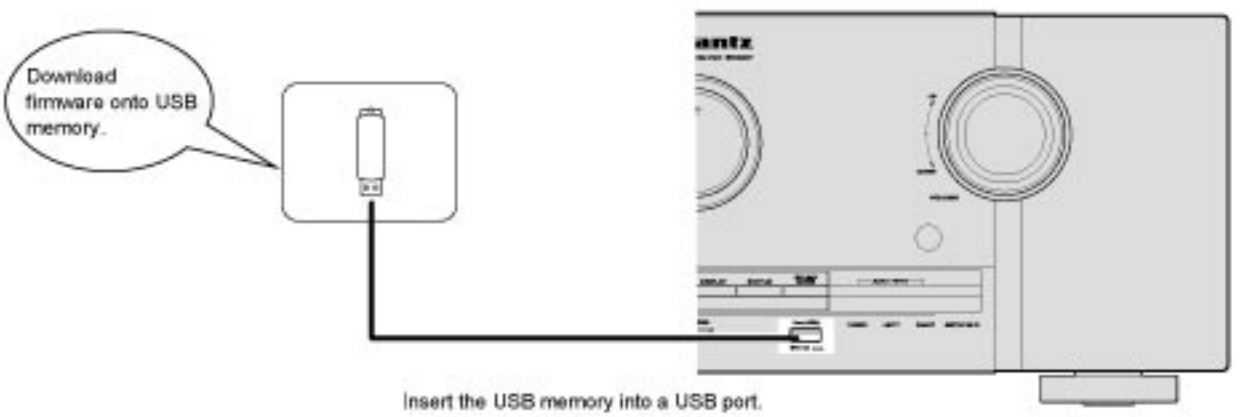

3.2. Download the firmware

(1) While pressing the "PRESET CH +" button and the "STATUS" button at the same time, power on this unit.
(2) "USB Update Start" appears in the FL Display.
(3) Press the "ENTER" button on remote control. "UpdateFileCheck" appears in the FL Display and the Update of the Firmware starts.
(4) During the update, the power indicator lights in red and the GUI screen display disappears.
The remaining update time appears in the display on the main unit.
When the update is completed, "Updateing Complete" appears in the FL Display and then this unit returns to the normal state.
(5) Execute a initialization (10 page).

--- Cautions on Firmware Update ---

- Do not remove a USB memory until updating is completed.
- Do not turn off the power until updating is completed.
  Approximately 1 hour is required for the updating procedure to be completed.
  Once updating starts, normal operations on the this unit cannot be performed until updating is completed. Also, setting items of the GUI menu of this unit or setting items of the image adjustment may be initialized.
  Note down the settings before updating, and set them again after updating.

3.3. About the error code

See the table below for error codes and details of faults when the firmware is updated through USB memory.

Error Code	Details of Error code	Display	Coping strategies
01	Log-in to DPMS failed.	ConnectionFail 01	Disconnect and connect the USB memory.
02	Line, etc., is busy when logging into DPMS.	FilesNotFound 02	Make sure that the FirmwareFile is in the USB memory.
03	Connection to DPMS failed.	ConnectionFail 03	Check the supported Model name/area for the FirmwareFile.
04	Firmware file data was requested but error message was received.	ConnectionFail 04	Start the USB Update again.
05	Firmware file data was requested but it timed out.	ConnectionFail 05	Start the USB Update again.
06	Firmware file data was requested but error message was received.	ConnectionFail 06	Start the USB Update again.
07	All firmware file data was requested but it timed out.	ConnectionFail 07	Start the USB Update again.
08	Firmware file data of Main CPU was requested but error message was received.	ConnectionFail 08	This unit automatically retries several times. Wait until the FL display stops. If the FL display stops at the Error display, press and hold the "ON/ STANDBY (⏻)" button for five seconds.
09	Firmware file data of Main CPU was requested but it timed out.	ConnectionFail 09	This unit automatically retries several times. Wait until the FL display stops. If the FL display stops at the Error display, press and hold the "ON/ STANDBY (⏻)" button for five seconds.
0A	Error (NG) message was received when firmware of Main CPU was downloaded.	Download fail 0A	Check the network connection. Carry out the update in an environment that has little network load.
0B	Error (line congestion) message was received when firmware of Main CPU was downloaded.	FilesNotFound 0B	Check the network connection. Carry out the update in an environment that has little network load.
0D	Received Package Version is wrong.	ConnectionFail 10	This unit automatically retries several times. Wait until the FL display stops. If the FL display stops at the Error display, press and hold the "ON/ STANDBY (⏻)" button for five seconds.
10	Main CPU failed to receive firmware for rewriting sent from DM860A (when timed out).	Main 10 Updating failed	This unit automatically retries several times. Wait until the FL display stops. If the FL display stops at the Error display, press and hold the "ON/ STANDBY (⏻)" button for five seconds.
11	Main CPU failed to receive firmware for rewriting sent from DM860A (when an error occurred).	Main 11 Updating failed	This unit automatically retries several times. Wait until the FL display stops. If the FL display stops at the Error display, press and hold the "ON/ STANDBY (⏻)" button for five seconds.
12	There was invalid data in the firmware for rewriting sent from DM860A to Main CPU (when a Check Sum error occurred).	Main 12 Updating failed	This unit automatically retries several times. Wait until the FL display stops. If the FL display stops at the Error display, press and hold the "ON/ STANDBY (⏻)" button for five seconds.
13	The deletion of block data failed before Main CPU was rewritten.	Main 13 Erase failed	This unit automatically retries several times. Wait until the FL display stops. If the FL display stops at the Error display, press and hold the "ON/ STANDBY (⏻)" button for five seconds.

Error Code	Details of Error code	Display	Coping strategies
14	The rewriting of block data failed when Main CPU was rewritten.	Main 14 Updating failed	This unit automatically retries several times. Wait until the FL display stops. If the FL display stops at the Error display, press and hold the "ON/ STANDBY (⏻)" button for five seconds.
15	The data verification was invalid after Main CPU was rewritten.	Main 15 Update CheckNG	This unit automatically retries several times. Wait until the FL display stops. If the FL display stops at the Error display, press and hold the "ON/ STANDBY (⏻)" button for five seconds.
20	Failure to acquire (Boot Loader Mode) IP address before rewriting DM860A (AutoIP).	Connection fail 20	Disconnect and connect the USB memory.
21	Failure to acquire (Boot Loader Mode) IP address before rewriting DM860A (when timed out).	FilesNotFound 21	Disconnect and connect the USB memory.
22	Log-in to DPMS failed.	NotMatchFirm 22	Check the supported Model name/area for the FirmwareFile.
23	Line, etc., is busy when logging into DPMS.	ConnectionFail 23	Disconnect and connect the USB memory.
24	Connection to DPMS failed.	Connection fail 24	This unit automatically retries several times. Wait until the FL display stops. If the FL display stops at the Error display, press and hold the "ON/ STANDBY (⏻)" button for five seconds.
25	Mode change failure of DM860A.	Connection fail 25	This unit automatically retries several times. Wait until the FL display stops. If the FL display stops at the Error display, press and hold the "ON/ STANDBY (⏻)" button for five seconds.
26	Data acquisition failed (timed out) when firmware of Main CPU was downloaded. Received Package Version is wrong.	Download fail 26	This unit automatically retries several times. Wait until the FL display stops. If the FL display stops at the Error display, press and hold the "ON/ STANDBY (⏻)" button for five seconds.
27	Mode change failure of DM860A.	Connection fail 27	This unit automatically retries several times. Wait until the FL display stops. If the FL display stops at the Error display, press and hold the "ON/ STANDBY (⏻)" button for five seconds.
36	Log-in to DPMS failed when Main CPU was rewritten.	Connection fail 36	This unit automatically retries several times. Wait until the FL display stops. If the FL display stops at the Error display, press and hold the POWER button for five seconds.
37	Line, etc., is busy when logging into DPMS when Main CPU was rewritten.	FilesNotFound 37	This unit automatically retries several times. Wait until the FL display stops. If the FL display stops at the Error display, press and hold the "ON/ STANDBY (⏻)" button for five seconds.
38	Connection to DPMS failed when Main CPU was rewritten.	NotMatchFirm 38	This unit automatically retries several times. Wait until the FL display stops. If the FL display stops at the Error display, press and hold the "ON/ STANDBY (⏻)" button for five seconds.
39	Connection to DPMS timed out when Main CPU was rewritten.	Connection fail 39	This unit automatically retries several times. Wait until the FL display stops. If the FL display stops at the Error display, press and hold the "ON/ STANDBY (⏻)" button for five seconds.
3A	Error (NG) message was received when firmware was downloaded or Main CPU was rewritten.	Connection fail 3A	This unit automatically retries several times. Wait until the FL display stops. If the FL display stops at the Error display, press and hold the "ON/ STANDBY (⏻)" button for five seconds.

Error Code	Details of Error code	Display	Coping strategies
3B	Error (line congestion) message received when downloading firmware when Main CPU was rewritten.	FilesNotFound 3B	This unit automatically retries several times. Wait until the FL display stops. If the FL display stops at the Error display, press and hold the "ON/ STANDBY (⏻)" button for five seconds.
3F	Failure to acquire (Boot Loader Mode) IP address before rewriting DM860A (when timed out).	Main 3E Connect failed	This unit automatically retries several times. Wait until the FL display stops. If the FL display stops at the Error display, press and hold the "ON/ STANDBY (⏻)" button for five seconds.
50	Log-in to DPMS failed when firmware such as DSP and PLD was rewritten.	Connection fail 50	This unit automatically retries several times. Wait until the FL display stops. If the FL display stops at the Error display, press and hold the "ON/ STANDBY (⏻)" button for five seconds.
51	Line, etc., is busy when the log-in to DPMS when firmware such as DSP and PLD was rewritten.	FilesNotFound 51	This unit automatically retries several times. Wait until the FL display stops. If the FL display stops at the Error display, press and hold the "ON/ STANDBY (⏻)" button for five seconds.
52	Connection to DPMS failed when firmware such as DSP and PLD was rewritten.	NotMatchFirm 52	This unit automatically retries several times. Wait until the FL display stops. If the FL display stops at the Error display, press and hold the "ON/ STANDBY (⏻)" button for five seconds.
54	Error message received regarding firmware data after the log-in to DPMS when firmware such as DSP and PLD was rewritten.	DSP 54 Updating failed	This unit automatically retries several times. Wait until the FL display stops. If the FL display stops at the Error display, press and hold the "ON/ STANDBY (⏻)" button for five seconds.
55	When firmware such as DSP and PLD was rewritten, request was made for firmware data after the log-in to DPMS, but it timed out.	DSP 55 Updating failed	This unit automatically retries several times. Wait until the FL display stops. If the FL display stops at the Error display, press and hold the "ON/ STANDBY (⏻)" button for five seconds.
56	Downloading firmware failed after the log-in to DPMS when firmware such as DSP and PLD was rewritten.	Connection fail 56	This unit automatically retries several times. Wait until the FL display stops. If the FL display stops at the Error display, press and hold the "ON/ STANDBY (⏻)" button for five seconds.
57	Firmware download error received (line congestion) after the log-in to DPMS when firmware such as DSP and PLD was rewritten.	FilesNotFound 57	This unit automatically retries several times. Wait until the FL display stops. If the FL display stops at the Error display, press and hold the "ON/ STANDBY (⏻)" button for five seconds.
5A	NACK was received when "C" command sent to DSP, PLD etc.	DSP 5A Connect failed	This unit automatically retries several times. Wait until the FL display stops. If the FL display stops at the Error display, press and hold the "ON/ STANDBY (⏻)" button for five seconds.
5B	NACK was received when "L" command sent to DSP, PLD etc.	DSP 5B Updating failed	This unit automatically retries several times. Wait until the FL display stops. If the FL display stops at the Error display, press and hold the "ON/ STANDBY (⏻)" button for five seconds.
5C	DSP, PLD etc. failed to receive firmware for rewriting sent from DM860A (when timed out).	DSP 5C Updating failed	This unit automatically retries several times. Wait until the FL display stops. If the FL display stops at the Error display, press and hold the "ON/ STANDBY (⏻)" button for five seconds.
5D	DSP, PLD etc. failed to receive firmware for rewriting sent from DM860A (when an error occurred).	DSP 5D Updating failed	This unit automatically retries several times. Wait until the FL display stops. If the FL display stops at the Error display, press and hold the "ON/ STANDBY (⏻)" button for five seconds.
5E	Data in firmware such as DSP and PLD for rewriting sent from DM860A was invalid (when a Check Sum error occurred).	DSP 5E Updating failed	This unit automatically retries several times. Wait until the FL display stops. If the FL display stops at the Error display, press and hold the "ON/ STANDBY (⏻)" button for five seconds.

Error Code	Details of Error code	Display	Coping strategies
5F	Invalid data in firmware such as DSP and PLD for rewriting sent from DM860A was invalid (invalid data was received).	DSP 5F Updating failed	This unit automatically retries several times. Wait until the FL display stops. If the FL display stops at the Error display, press and hold the "ON/ STANDBY (⏻)" button for five seconds.
60	NACK was received when "P" command sent to DSP, PLD etc.	DSP 60 Updating failed	This unit automatically retries several times. Wait until the FL display stops. If the FL display stops at the Error display, press and hold the "ON/ STANDBY (⏻)" button for five seconds.
61	NACK was received when "I" command sent to DSP, PLD etc.	DSP 61 Update CheckNG	This unit automatically retries several times. Wait until the FL display stops. If the FL display stops at the Error display, press and hold the "ON/ STANDBY (⏻)" button for five seconds.
62	NACK was received when "P" command sent to DSP, PLD etc.	DSP 62 Updating failed	This unit automatically retries several times. Wait until the FL display stops. If the FL display stops at the Error display, press and hold the "ON/ STANDBY (⏻)" button for five seconds.
63	NACK was received when "I" command sent to DSP, PLD etc.	DSP 63 Update CheckNG	This unit automatically retries several times. Wait until the FL display stops. If the FL display stops at the Error display, press and hold the "ON/ STANDBY (⏻)" button for five seconds.
64	NACK was received when "I" command sent to DSP, PLD etc.	DSP 64 Update CheckNG	This unit automatically retries several times. Wait until the FL display stops. If the FL display stops at the Error display, press and hold the "ON/ STANDBY (⏻)" button for five seconds.
80	Acquisition of serial flash data failed before serial flash was deleted.	GUI 80 Updating failed	This unit automatically retries several times. Wait until the FL display stops. If the FL display stops at the Error display, press and hold the "ON/ STANDBY (⏻)" button for five seconds.
81	Deleting data failed before serial flash was rewritten.	GUI 81 Updating failed	This unit automatically retries several times. Wait until the FL display stops. If the FL display stops at the Error display, press and hold the "ON/ STANDBY (⏻)" button for five seconds.
82	Receiving firmware for rewriting serial flash sent by DM860A failed (when timed out).	GUI 82 Updating failed	This unit automatically retries several times. Wait until the FL display stops. If the FL display stops at the Error display, press and hold the "ON/ STANDBY (⏻)" button for five seconds.
83	Receiving firmware for rewriting serial flash sent by DM860A failed (when an error).	GUI 83 Updating failed	This unit automatically retries several times. Wait until the FL display stops. If the FL display stops at the Error display, press and hold the "ON/ STANDBY (⏻)" button for five seconds.
84	Receiving firmware for rewriting serial flash sent by DM860A failed (when a Check Sum error).	GUI 84 Updating failed	This unit automatically retries several times. Wait until the FL display stops. If the FL display stops at the Error display, press and hold the "ON/ STANDBY (⏻)" button for five seconds.
85	Receiving firmware for rewriting serial flash sent by DM860A failed (when invalid data was received).	GUI 85 Updating failed	This unit automatically retries several times. Wait until the FL display stops. If the FL display stops at the Error display, press and hold the "ON/ STANDBY (⏻)" button for five seconds.
86	The data verification was invalid after serial flash was rewritten.	GUI 86 Updating failed	This unit automatically retries several times. Wait until the FL display stops. If the FL display stop at the Error display, press and hold the "ON/ STANDBY (⏻)" button for five seconds.
A2	Invalid login via DPMS access was notified when DM860A related firmware was rewritten (Application Mode).	Connection fail A2	This unit automatically retries several times. Wait until the FL display stops. If the FL display stops at the Error display, press and hold the "ON/ STANDBY (⏻)" button for five seconds.

Error Code	Details of Error code	Display	Coping strategies
A3	Line congestion via DPMS access was notified when DM860A related firmware was rewritten (Application Mode).	FilesNotFound A3	This unit automatically retries several times. Wait until the FL display stops. If the FL display stops at the Error display, press and hold the "ON/ STANDBY (⏻)" button for five seconds.
A4	Connection failure via DPMS access was notified when DM860A related firmware was rewritten (Application Mode).	NotMatchFirm A4	This unit automatically retries several times. Wait until the FL display stops. If the FL display stops at the Error display, press and hold the "ON/ STANDBY (⏻)" button for five seconds.
A6	Firmware data error message was received after DPMS login when DM860A related firmware was rewritten (Application Mode).	EIMG A6 Updating failed	This unit automatically retries several times. Wait until the FL display stops. If the FL display stops at the Error display, press and hold the "ON/ STANDBY (⏻)" button for five seconds.
A7	When DM860A related firmware was rewritten (Application Mode), request was made for firmware data after DPMS login but it timed out.	EIMG A7 Updating failed	This unit automatically retries several times. Wait until the FL display stops. If the FL display stops at the Error display, press and hold the "ON/ STANDBY (⏻)" button for five seconds.
AE	Firmware download error message received (when download fails) when DM860A related firmware was rewritten (Boot Loader Mode).	Connection fail AE	This unit automatically retries several times. Wait until the FL display stops. If the FL display stops at the Error display, press and hold the "ON/ STANDBY (⏻)" button for five seconds.
AF	Firmware download error message received (line congestion) when DM860A related firmware was rewritten (Boot Loader Mode).	FilesNotFound AF	This unit automatically retries several times. Wait until the FL display stops. If the FL display stops at the Error display, press and hold the "ON/ STANDBY (⏻)" button for five seconds.
B1	DM860A related firmware download error message. (Timeout failure)	Download fail B1	This unit automatically retries several times. Wait until the FL display stops. If the FL display stops at the Error display, press and hold the "ON/ STANDBY (⏻)" button for five seconds.
B2	Error message received when DM860A related firmware was rewritten.	EIMG B2 Updating failed	This unit automatically retries several times. Wait until the FL display stops. If the FL display stops at the Error display, press and hold the "ON/ STANDBY (⏻)" button for five seconds.
B3	Firmware writing error message. (Timeout failure)	EIMG B3 Updating failed	This unit automatically retries several times. Wait until the FL display stops. If the FL display stops at the Error display, press and hold the "ON/ STANDBY (⏻)" button for five seconds.
B4	Mode change failure of DM860A. (Boot Loader Mode)	EIMG B4 Updating failed	This unit automatically retries several times. Wait until the FL display stops. If the FL display stops at the Error display, press and hold the "ON/ STANDBY (⏻)" button for five seconds.
B5	Mode change failure of DM860A. (Application Mode)	EIMG B5 Updating failed	This unit automatically retries several times. Wait until the FL display stops. If the FL display stops at the Error display, press and hold the "ON/ STANDBY (⏻)" button for five seconds.

--- Cautions on Firmware Update ---

When an error code as shown above appears in the DISPLAY, check the following:

- Check whether the Firmware downloaded to the USB memory is correct (whether the MODEL name and area of the downloaded Firmware match those for the product, and whether the USB Memory contains data other than the latest Firmware).
- Update after resetting the product.
- Use a different USB memory.

3.4. Device display during firmware update

Display of target device during firmware update.

Target device	Display	Error code when an error occurs
Main	Main ***min **%	08 - 0C 10 - 15 22 - 24 36 - 3E
Audio PLD	APLD ***min **%	50 - 52 54 - 58 5A - 61
DSP	DSP ***min **%	50 - 52 54 - 58 5A - 61
GUI Serial Flash	GUI ***min **%	50 - 52 54 - 58 5A - 61 80 - 86
DM860A Boot Loader	ESBL ***min ***	A0 - A4 A6 - A7 AE - B5
DM860A Image	EIMG ***min ***	A0 - A4 A6 - A7 AE - B5
DM860A Image (Emergency Mode)	Update Retry	–

Confirming the firmware's number after upgraded

After updating the firmware, check the version. Refer to "**1. µcom/DSP Version display mode**" (23 page).

ADJUSTMENT

Audio Section

Adjusting Idling Current

Required measurement equipment: DC Voltmeter

1. Preparation

(1) Temperature should be at avoid direct blow from an air conditioner or an electric fan and humidity should be moderate, and place the set at normal usage environment.
15 °C ~ 30 °C (59 °F ~ 86 °F)

(2) Presetting

- POWER (Power source switch) STANDBY
- SPEAKER (Speaker terminal) No load

(Do not connect speaker, dummy resistor, etc.)

2. Adjustment

(1) Remove the top cover and set VR401, VR402, VR403, VR404, VR405, VR406, VR407 on at fully 7CH AMP UNIT at fully counterclockwise (↺) position.

(2) Connect DC Voltmeter to test points (FRONT-Lch: TP401, FRONT-Rch: TP402, CENTER ch: TP403, SURROUND-Lch: TP404, SURROUND-Rch: TP405, SURROUND-BACK Lch: TP406, SURROUND-BACK Rch: TP407.

(3) Connect the power cord to AC Line, and set the power switch to "ON".

(4) Presetting.

MASTER VOLUME : "—" counterclockwise (↺ min.)
SPEAKER (Speaker terminal) : No load
(Do not connect speaker, dummy resistor, etc.)
MODE : MCH STEREO
FUNCTION : DVD

(5) Within 2 minutes after the power on, turn VR401 clockwise (↻) to adjust the TEST POINT voltage to 6.5mV ± 0.5mV DC.

(6) After 10 minutes from the preset above, turn VR401 to set the voltage to 8.0mV ± 0.5mV DC.

(7) Adjust the Variable Resistors of each channel in the same way.

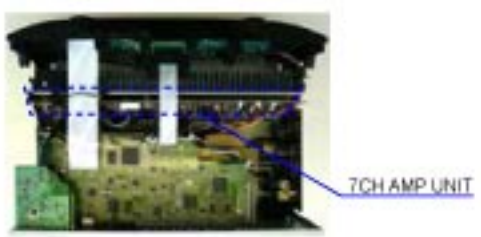

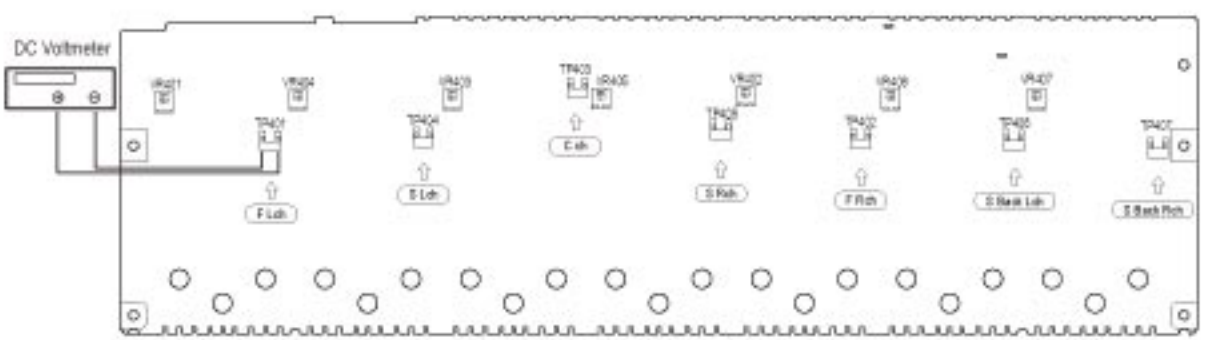

This unit is equipped with a digital signal processing circuit that lets you play program sources in the sound mode to achieve the same sense of presence as in a movie theater.

Sound modes and surround parameters

This table shows the speakers that can be used in each sound mode and the surround parameters adjustable in each sound mode.

Symbols in the table

○ This indicates the audio output channels or surround parameters that can be set.
◎ This indicates the audio output channels. The output channels depend on the settings of "Speaker Config.".

Sound Mode	Channel output						Surround Parameter			
	Front L/R	Center	Surround L/R	Surround back L/R	Front height L/R	Subwoofer	Home Theater EQ	Loudness Management *2	Dynamic Compression *3	Low Frequency Effects *4
DIRECT/PURE DIRECT (2channel) *1	○					◎*5		○	○	
DIRECT/PURE DIRECT (Multi-channel) *1	○	◎	◎	◎*6	◎*6	◎		○	○	○
STEREO	○					◎		○	○	○
MULTI CH IN	○	◎	◎	◎	◎*7	◎	○*8			○
DOLBY PRO LOGIC IIz	○	◎	◎		◎	◎	○	○	○	
DOLBY PRO LOGIC IIx	○	◎	◎	◎		◎	○*9	○	○	
DOLBY PRO LOGIC II	○	◎	◎			◎	○*10	○	○	
DOLBY PRO LOGIC	○	◎	◎			◎	○	○	○	
DTS NEO:6	○	◎	◎	◎		◎	○*7	○	○	
DOLBY DIGITAL	○	◎	◎	◎	◎*7	◎	○*8			○
DOLBY DIGITAL Plus	○	◎	◎	◎	◎*7	◎	○*8			○
DOLBY TrueHD	○	◎	◎	◎	◎*7	◎	○*8	○	○	○
DTS SURROUND	○	◎	◎	◎	◎*7	◎	○*8			○
DTS 96/24	○	◎	◎	◎	◎*7	◎	○*8			○
DTS-HD	○	◎	◎	◎	◎*7	◎	○*8			○
DTS Express	○	◎	◎	◎	◎*7	◎	○*8			○
MULTI CH STEREO	○	◎	◎	◎	◎	◎		○	○	○
VIRTUAL	○					◎		○	○	○

*1 During playback in PURE DIRECT mode, the surround parameters are the same as in DIRECT mode.
*2 This item can be selected when a Dolby TrueHD signal is played.
*3 This item can be selected when a Dolby Digital or DTS signal is played.
*4 This item can be selected when a Dolby Digital or DTS signal or DVD-Audio is played.
*5 Only when "Subwoofer Mode" is set to "LFE+Main", sound is output from the subwoofer.
*6 A signal for each channel contained in an input signal is output as audio.
*7 Audio is output from the front height speaker when the set sound mode name contains "+PLIIz". For information on how to check the sound mode.
*8 This setting is unavailable when the set sound mode name contains "+PLIIx Music". For information on how to check the sound mode.
*9 This setting is possible when the sound mode is "PLIIx Movie" or "DTS NEO:6 Cinema".
*10 This setting is possible when the sound mode is "PLII Movie".

Sound Mode	Surround Parameter				Subwoofer	Tone *11	Audyssey *12			M-DAX *14
	PRO LOGIC IIz/IIx Music mode only			NEO:6 Music mode only						
	Panorama	Dimension	Center Width	Center Image			MultEQ® XT	Dynamic EQ *13	Dynamic Volume *13	
DIRECT/PURE DIRECT (2channel)*1					○*5					
DIRECT/PURE DIRECT (Multi-channel)*1					○					
STEREO						○	○	○	○	○
MULTI CH IN					○	○	○	○	○	
DOLBY PRO LOGIC IIz					○	○	○	○	○	○
DOLBY PRO LOGIC IIx	○	○	○		○	○	○	○	○	○
DOLBY PRO LOGIC II	○	○	○		○	○	○	○	○	○
DOLBY PRO LOGIC	○	○	○		○	○	○	○	○	○
DTS NEO:6				○	○	○	○	○	○	○
DOLBY DIGITAL					○	○	○	○	○	
DOLBY DIGITAL Plus					○	○	○	○	○	
DOLBY TrueHD					○	○	○	○	○	
DTS SURROUND					○	○	○	○	○	
DTS 96/24					○	○	○	○	○	
DTS-HD					○	○	○	○	○	
DTS Express					○	○	○	○	○	
MULTI CH STEREO					○	○	○	○	○	○
VIRTUAL					○	○	○	○	○	○

*1 During playback in PURE DIRECT mode, the surround parameters are the same as in DIRECT mode.
*5 Only when "Subwoofer Mode" is set to "LFE+Main", sound is output from the subwoofer.
*11 This item cannot be set when "Dynamic EQ" is set to "On".
*12 For HD Audio whose sampling frequency of an input signal is more than 96 kHz, this sound parameter cannot be set.
*13 This item cannot be set when "MultEQ® XT" is set to "Off" or "Graphic EQ".
*14 This item can be set when the input signal is analog, PCM 48 kHz or 44.1 kHz.

❑ Types of input signals, and corresponding sound modes

This table shows the input signal that can be played in each sound mode. Check the audio signal of the input source then select the sound mode.

Symbols in the table

● This indicates the default sound mode.
○ This indicates the selectable sound mode.

Sound Mode	NOTE	Input signal types and formats															
		ANALOG	PCM		DTS-HD		DTS					DOLBY		DOLBY DIGITAL			
			PCM (multi ch)	PCM (2ch)	DTS-HD Master Audio	DTS-HD High Resolution Audio	DTS EXPRESS	DTS ES DSCRT (With Flag)	DTS ES MTRX (With Flag)	DTS (5.1ch)	DTS 96/24	DOLBY TrueHD	DOLBY DIGITAL Plus	DOLBY DIGITAL EX (With Flag)	DOLBY DIGITAL EX (With no Flag)	DOLBY DIGITAL (5.1ch)	DOLBY DIGITAL (2ch)
DTS SURROUND																	
DTS-HD MSTR					●												
DTS-HD HI RES						●											
DTS ES DSCRT6.1	*1*2							●									
DTS ES MTRX6.1	*1*2								●								
DTS SURROUND								○	○	●							
DTS 96/24											●						
DTS (–HD) + PLIIx MOVIE	*1*3				○	○	○			○	○						
DTS (–HD) + PLIIx MUSIC	*1*2				○	○	○			○	○						
DTS (–HD) + PLIIz	*4*5				○	○	○	○	○	○	○						
DTS EXPRESS							●										
DTS (–HD) + NEO:6	*1*2				○	○	○			○	○						
DTS NEO:6 CINEMA		○		○													○
DTS NEO:6 MUSIC		○		○													○
DOLBY SURROUND																	
DOLBY TrueHD												●					
DOLBY DIGITAL+													●				
DOLBY DIGITAL EX	*1*2													○	○	○	
DOLBY (D+) (HD) +EX	*1*2											○	○				
DOLBY DIGITAL														○	●	●	
DOLBY (D) (D+) (HD) +PLIIx MOVIE	*1*3											○	○	●	○	○	
DOLBY (D) (D+) (HD) +PLIIx MUSIC	*1*2											○	○	○	○	○	
DOLBY (D) (D+) (HD) +PLIIz	*4											○	○	○	○	○	
DOLBY PRO LOGIC IIx MOVIE	*1*2	○		○													○
DOLBY PRO LOGIC IIx MUSIC	*1*2	○		○													○
DOLBY PRO LOGIC IIx GAME	*1*2	○		○													○
DOLBY PRO LOGIC IIz	*4*5	○		○													○
DOLBY PRO LOGIC II MOVIE		○		○													○
DOLBY PRO LOGIC II MUSIC		○		○													○
DOLBY PRO LOGIC II GAME		○		○													○
DOLBY PRO LOGIC		○		○													○

*1 This sound mode can be selected when "Assign Mode" is set to "Surround Back".
*2 If "Speaker Config." – "Surr. Back" is set to "None", this sound mode cannot be selected.
*3 If "Speaker Config." – "Surr. Back" is set to "1spkr" or "None", this sound mode cannot be selected.
*4 If "Speaker Config." – "Front Height" is set to "None", this sound mode cannot be selected.
*5 This sound mode can be selected when "Assign Mode" is set to "Front Height".

Sound Mode	NOTE	Input signal types and formats															
		ANALOG	PCM		DTS-HD		DTS					DOLBY		DOLBY DIGITAL			
			PCM (multi ch)	PCM (2ch)	DTS-HD Master Audio	DTS-HD High Resolution Audio	DTS EXPRESS	DTS ES DSCRT (With Flag)	DTS ES MTRX (With Flag)	DTS (5.1ch)	DTS 96/24	DOLBY TrueHD	DOLBY DIGITAL Plus	DOLBY DIGITAL EX (With Flag)	DOLBY DIGITAL EX (With no Flag)	DOLBY DIGITAL (5.1ch)	DOLBY DIGITAL (2ch)
MULTI CH IN																	
MULTI CH IN			●														
MULTI CH IN + PLIIx MOVIE	*1*3		○														
MULTI CH IN + PLIIx MUSIC	*1*2		○														
MULTI CH IN + PLII2	*4*5		○														
MULTI CH IN + Dolby EX	*1*2		○														
MULTI CH IN 7.1	*1*2		● (7.1)														
DIRECT																	
DIRECT		○	○	○	○	○	○	○	○	○	○	○	○	○	○	○	○
PURE DIRECT																	
PURE DIRECT		○	○	○	○	○	○	○	○	○	○	○	○	○	○	○	○
DSP SIMULATION																	
MULTI CH STEREO		○	○	○	○	○	○	○	○	○	○	○	○	○	○	○	○
VIRTUAL		○	○	○	○	○	○	○	○	○	○	○	○	○	○	○	○
STEREO																	
STEREO		●	○	●	○	○	○	○	○	○	○	○	○	○	○	○	○

*1 This sound mode can be selected when "Assign Mode" is set to "Surround Back".
*2 If "Speaker Config." – "Surr. Back" is set to "None", this sound mode cannot be selected.
*3 If "Speaker Config." – "Surr. Back" is set to "1 spkr" or "None", this sound mode cannot be selected.
*4 If "Speaker Config." – "Front Height" is set to "None", this sound mode cannot be selected.
*5 This sound mode can be selected when "Assign Mode" is set to "Front Height".

TROUBLE SHOOTING

1. POWER

1.1. Power not turn on

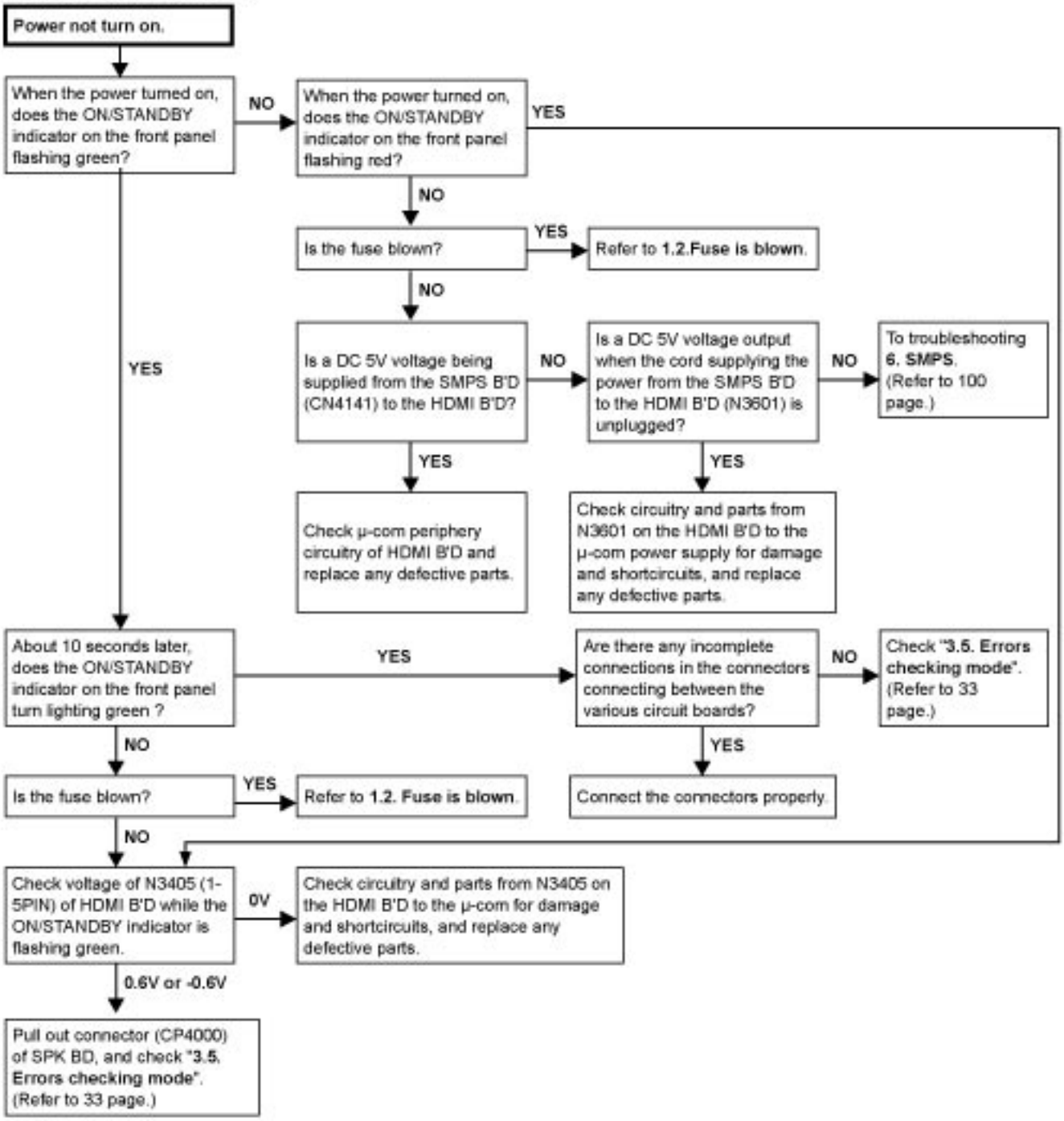

1.2. Fuse is blown

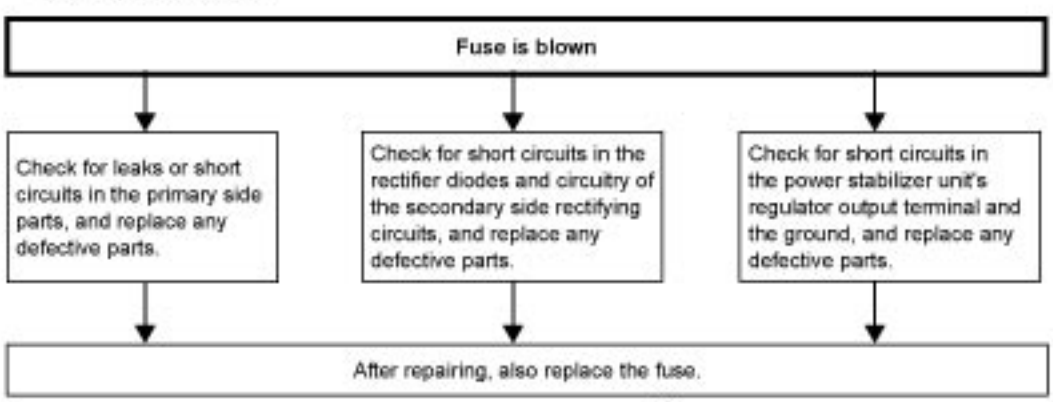

2. Analog video

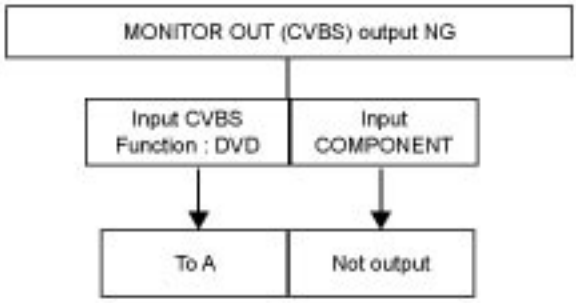

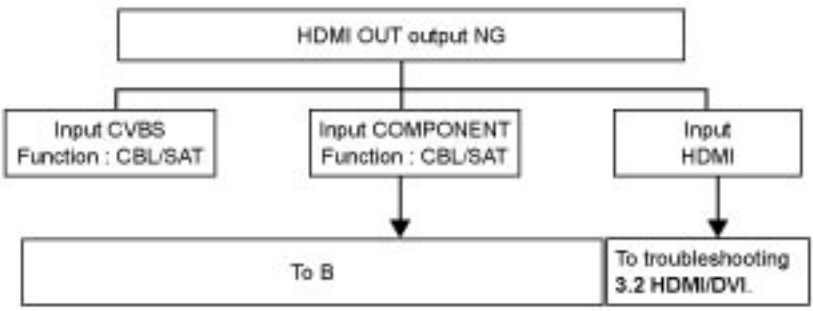

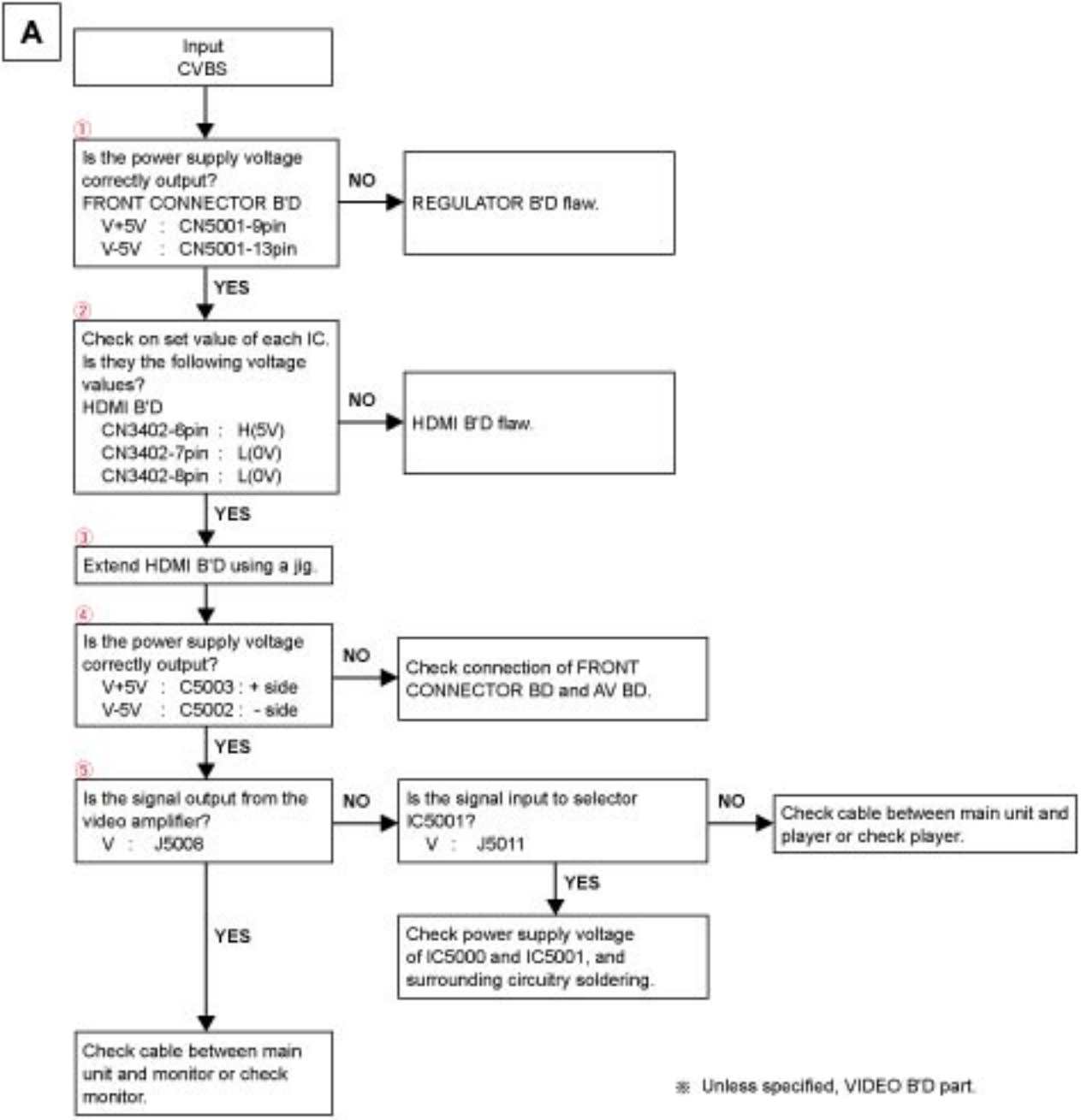
A
Input
CVBS
①
Is the power supply voltage correctly output?
FRONT CONNECTOR B'D
V+5V : CN5001-9pin
V-5V : CN5001-13pin
NO
REGULATOR B'D flaw.
YES
②
Check on set value of each IC. Is they the following voltage values?
HDMI B'D
CN3402-6pin : H(5V)
CN3402-7pin : L(0V)
CN3402-8pin : L(0V)
NO
HDMI B'D flaw.
YES
③
Extend HDMI B'D using a jig.
④
Is the power supply voltage correctly output?
V+5V : C5003 : + side
V-5V : C5002 : - side
NO
Check connection of FRONT CONNECTOR BD and AV BD.
YES
⑤
Is the signal output from the video amplifier?
V : J5008
NO
Is the signal input to selector IC5001?
V : J5011
NO
Check cable between main unit and player or check player.
YES
Check power supply voltage of IC5000 and IC5001, and surrounding circuitry soldering.
YES
Check cable between main unit and monitor or check monitor.
※ Unless specified, VIDEO B'D part.

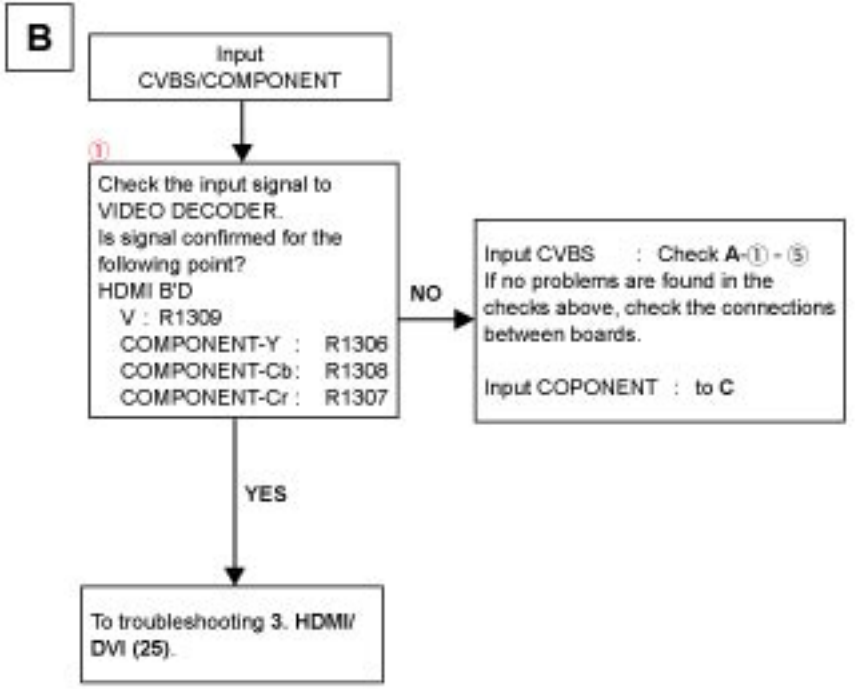
B
Input
CVBS/COMPONENT
①
Check the input signal to
VIDEO DECODER.
Is signal confirmed for the
following point?
HDMI B'D
V : R1309
COMPONENT-Y : R1306
COMPONENT-Cb : R1308
COMPONENT-Cr : R1307
NO
Input CVBS : Check A-① - ⑤
If no problems are found in the
checks above, check the connections
between boards.
Input COPONENT : to C
YES
To troubleshooting 3. HDMI/
DVI (25).

C

Input
COMPONENT

①
Is the power supply voltage correctly output?
FRONT CONNECTOR B'D
V+5V : CN5001-9pin
V-5V : CN5001-13pin

NO → REGULATOR B'D flaw.

YES ↓

②
Check on set value of each IC. Is they the following voltage values?
HDMI B'D
N3402-4pin : H(5V)
N3402-5pin : L(0V)
N3402-9pin : H(5V)

NO → HDMI B'D flaw.

YES ↓

③
Extend HDMI B'D using a jig.

④
Is the power supply voltage correctly output?
V+5V : C5011 : + side
V-5V : C5022 : - side

NO → Check connection of FRONT CONNECTOR BD and AV BD.

YES ↓

⑤
Is the signal output from the video amplifier?
COMP-Y : R5015
COMP-CB : R5019
COMP-CR : R5023

NO → Is the signal input to video amplifier?
COMP-Y : C5017 : + side
COMP-CB : C5023 : + side
COMP-CR : C5018 : + side

NO → Check cable between main unit and player or check player.

YES → Check power supply voltage of IC5002, and surrounding circuitry soldering.

YES ↓

Check FRONT CONNECTOR B'D flaw, and connection of FRONT CONNECTOR B'D or HDMI B'D and VIDEO B'D.

※ Unless specified, VIDEO B'D part.

HDMI test point

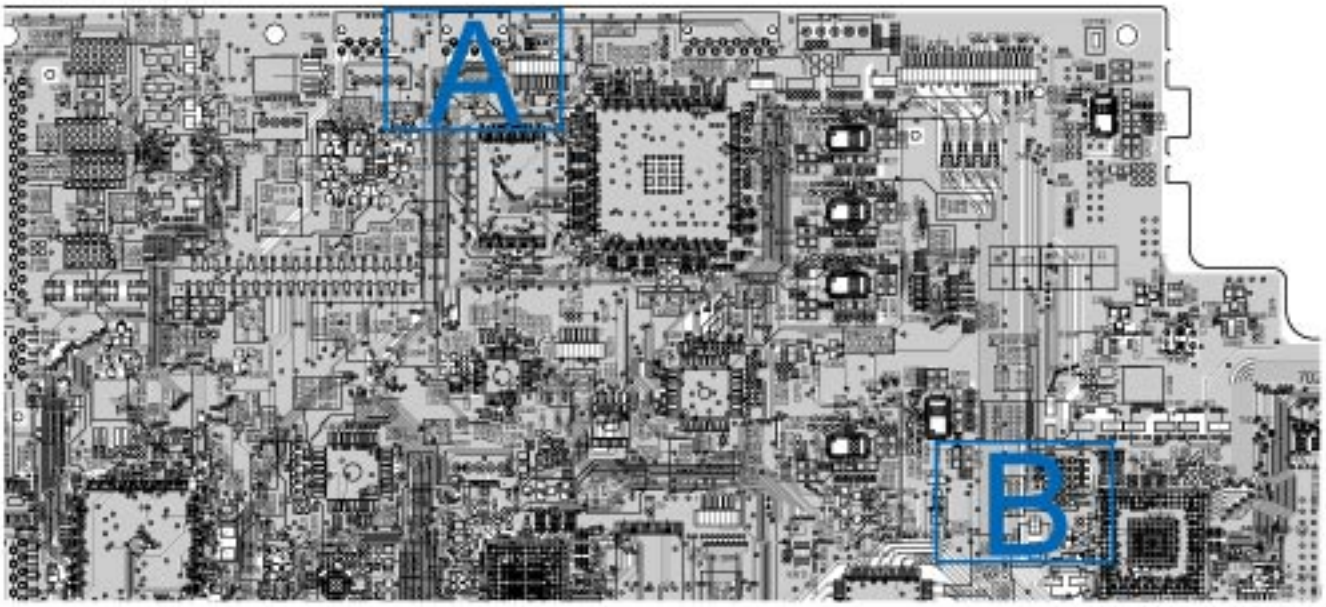

(COMPONENT SIDE)

Detail A

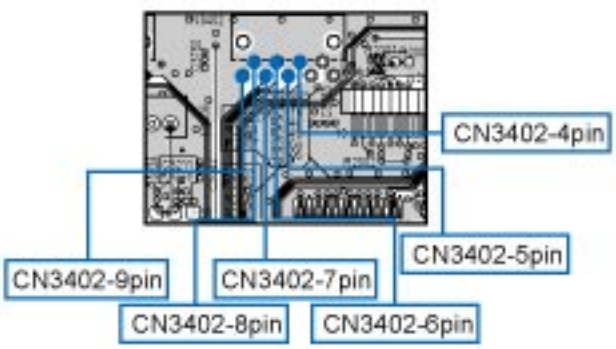

Detail B

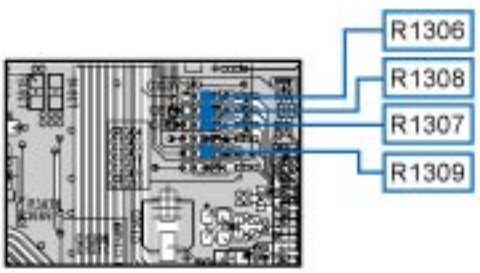

VIDEO test point

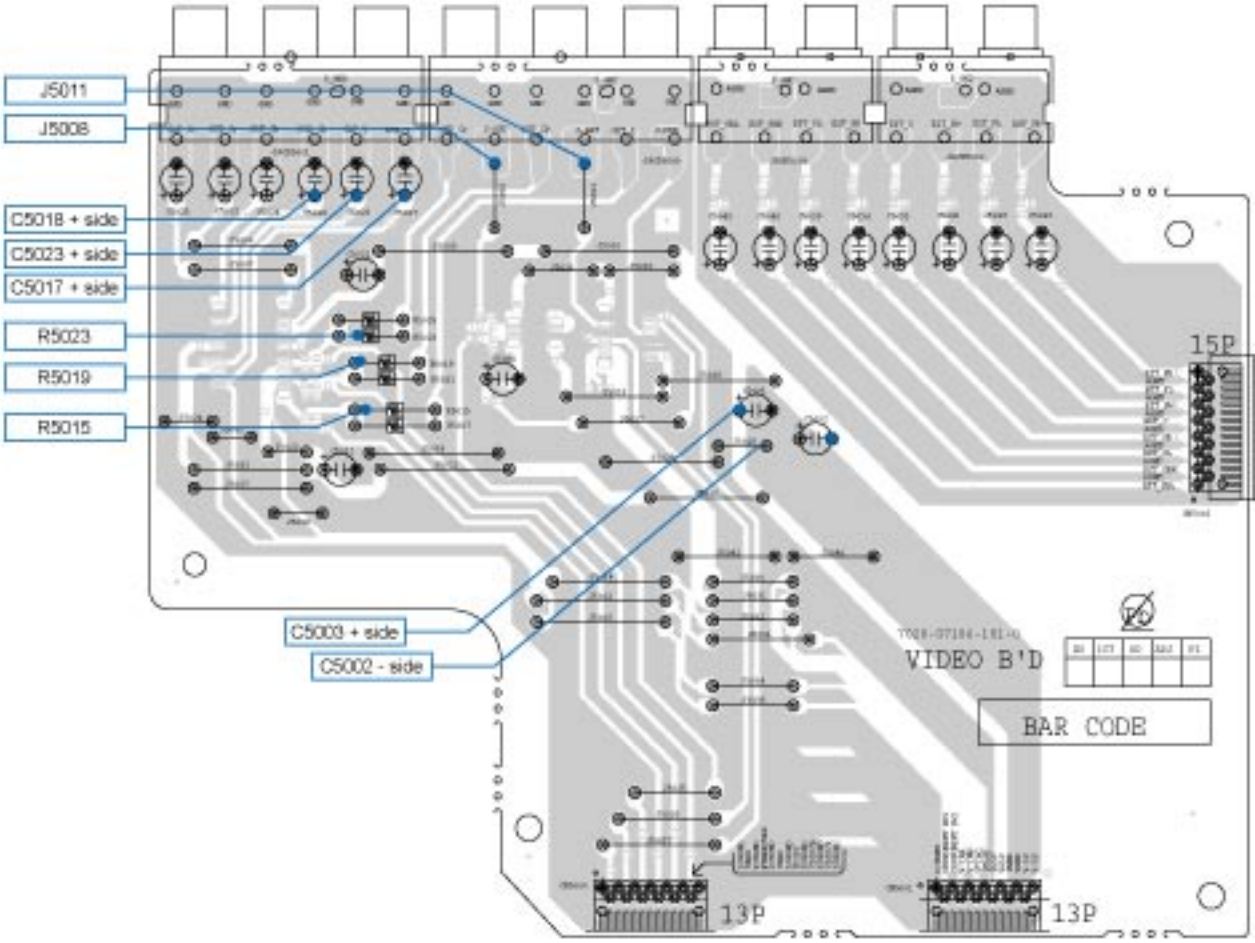

3. HDMI/DVI

3.1. No picture or sound is output (HDMI to HDMI)

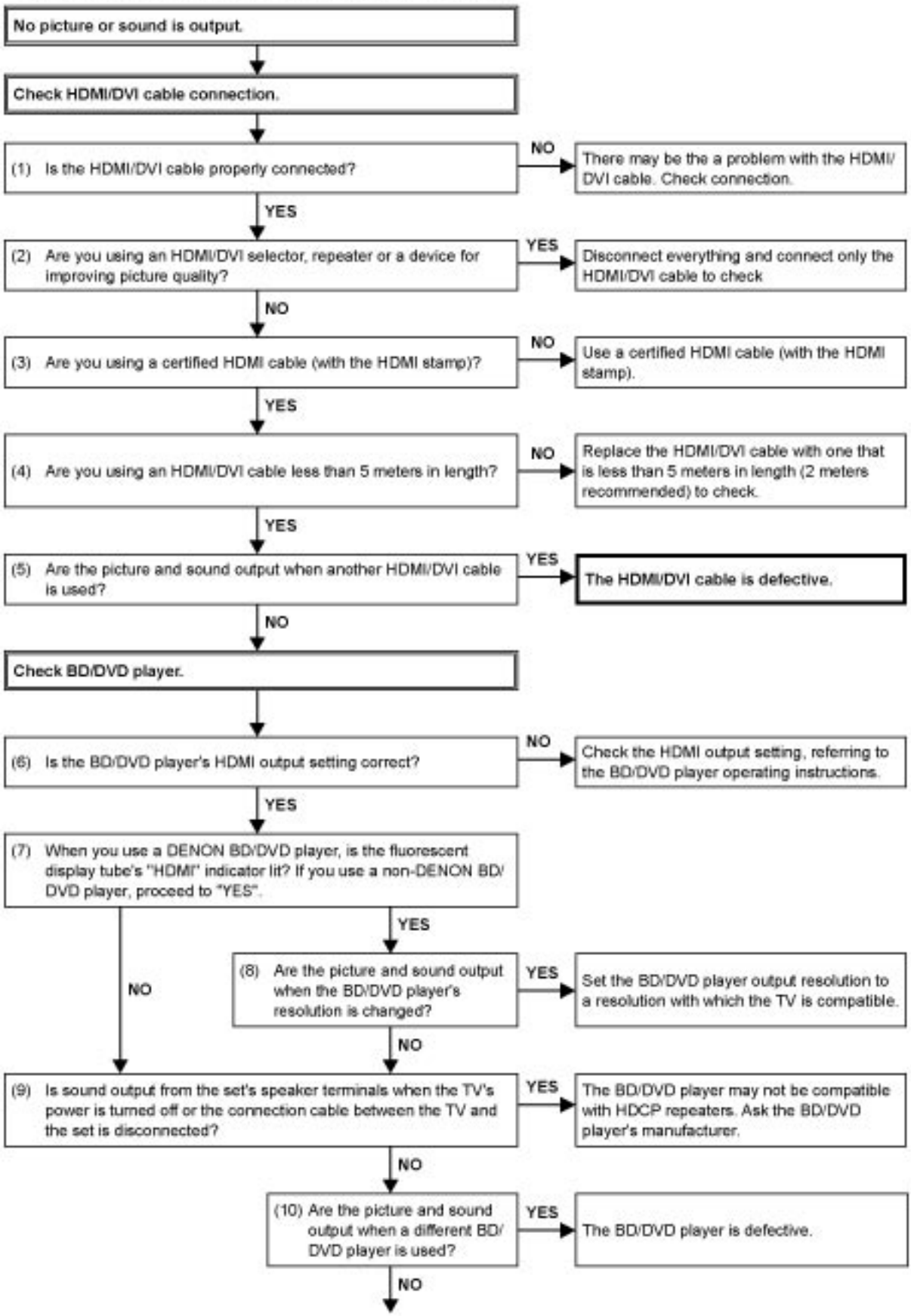

Check TV

(11) Is the TV HDCP-compatible?
- NO → Use an HDCP-compatible TV. PC TVs cannot be used.
- YES ↓

(12) Is the TV compatible with resolutions of 1080P?
- NO → If the TV is not compatible with resolutions of 1080P, no picture will be output, even if the BD/DVD player resolution is set to 1080P.
- YES ↓

(13) Is the TV's input set to HDMI?
- NO → Check the TV's input setting, referring to the TV's operating instructions.
- YES ↓

(14) Are the picture and sound output when a different TV is used?
- NO → **The TV is defective.**
- YES ↓

Check set (SR5007)

Is a contact part of HDMI connector normal? (Refer to 89 page (*1).)
- NO → The HDMI connector is defective. Replace the new HDMI connector.
- YES ↓

(15) Is any PIN of the HDMI connector bent or is dust adhering to the connector?
- YES → Malfunction of the HDMI connector. (If dust is adhering, remove the dust and perform the troubleshooting again from (1).)
- NO ↓

(16) Is the set's input set to HDMI?
- NO → Check the set's input setting, referring to the set's operating instructions.
- YES ↓

The set does not recognize the TV.
(17) Is TP [HPD-OUT] set to the "H"(3V-5V)?
With the TV connected,check the voltage of the IC on the side on which the TV is connected.
Is communication waveform confirmed in TP[DDCCLK-OUT/ DDCDATA-OUT]?
Is D1603/D1604/D1605/D1606/D1607/D1608/D1609/D1610 terminated by the TMDS signal of 3.3V and is the signal output?
- NO → The pattern and circuit from the HDMI connector (N1602) to the U1601 are defective, or HDMI output circuitry is defective (U1601 and surrounding circuitry).
- YES ↓

(18)
When using a DENON BD/DVD player, is the FL display's "HDMI" indicator lit?
If using a non-DENON BD/DVD player, proceed to "NO".
- NO → **The BD/DVD player does not recognize the connection with the set.**
(19)
Is HDMI connector (N1001/N1002/N1003/N1004/N1302 : TP[HPD-IN1 - 5]) set to "H"(3V-5V)?
With the BD/DVD player connected, Check voltage of the HDMI connector (N1001/N1002/N1003/N1004/N1302 : TP[+5V - IN 1 - 5]) for the input on the side on which the BD/DVD player is connected.
Is communication waveform confirmed in TP[DDCCLK / DDCDATA IN 1 - 5] around each HDMI connector ?
Is TMDS line of HDMI connector (N1001/N1002/N1003/N1004/N1302) terminated by the TMDS signal of 3.3V and is the signal output?
  - NO → The pattern and circuit from the HDMI connector (N1001/N1002/ N1003/N1004/ N1302) to the IC (U1001 or U1302) are defective.
  - YES ↓
- YES ↓

(20)
VIDEO CONVERT : Is the picture output when it is set to off?
(After item (23) : To be "VIDEO CONVERT:OFF" setting.)
- YES → U1601 (ADV8003) and surrounding circuitry are defective.
- NO ↓

The HDMI input circuitry is defective.
(U1001 or U1302 and surrounding circuitry)

↓

Check operation of each device.
(AMP source : BD / Video input of player : 480P / Connect the TV.)

↓

Check operation of U1(ADV3002).

↓

(21) Check power supply.
Are 5V or 3.3V supplied to U1001 (each power supply pin)?
Refer to [Detail C] of the substrate for test point.

→ NO → The power supply circuitry is defective.

↓ YES

(22) Check RESET.
Is RESET waveform confirmed in TP[3002RESET], when the power is turned on?(If the waveform is not the reference waveform, proceed to NO.)

→ NO → The RESET circuitry or U1001 is defective.

↓ YES

(23) Check Control signal (I2C).
Is waveform confirmed in TP[HSCL/HSDA], when the power is turned on? (If the waveform is not the reference waveform, proceed to NO.)

→ NO → The pattern is defective of the HSCL/HSDA line.

↓ YES

(24) Check output signal.
Is TMDS waveform confirmed in 25pin/26pin/28pin/29pin/31pin/32pin/34pin/35pin.
Is communication waveform of DDC_SCL/DDC_SDA confirmed in 67pin/68pin? (If the waveform is not the reference waveform, proceed to NO.)

→ NO → The U1001 is defective.

↓ YES

Check operation of U1302 (ADV7850).

↓

(25) Check power supply.
Are 1.8V supplied to L3616?
Are 3.3V supplied to Q3608 1pin?

→ NO → The power supply circuitry is defective.

↓ YES

(26) Check xtal oscillator.
Is oscillation of X1301(27.0 MHz) transmitted?

→ NO → The X1301 or U1302 is defective.

↓ YES

(27) Check RESET.
Is RESET waveform confirmed in TP[7850RESET], when power is turned on?
(If the waveform is not the reference waveform, proceed to NO.)

→ NO → The RESET circuitry or U1302 is defective.

↓ YES

Check operation of U1601 (ADV8003)

↓

(28) Check power supply.
Are 1.8V supplied to L3622?
Are 3.3V supplied to Q3610 1pin?

→ **NO** → The power supply circuitry is defective.

↓ **YES**

(29) Check xtal oscillator.
Is oscillation of X1601(27MHz) transmitted?

→ **NO** → The X1601 or U1601 is defective.

↓ **YES**

(30) Check RESET.
Is RESET waveform confirmed in TP[8003 RESET], when power is turned on? (If not reference waveform, proceed to "NO".)

→ **NO** → The RESET circuitry or U1601 is defective.

↓ **YES**

The pattern and circuit from the HDMI connector (N1602) to the IC(U1601) is defective, or HDMI output circuitry is defective.

(*1) Abnormal sample of HDMI connector : The internal terminal has bent.

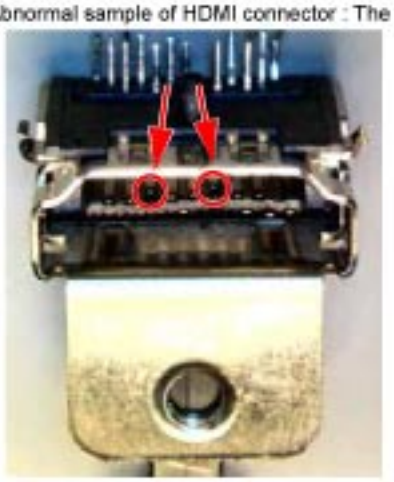

HDMI test point and waveforms

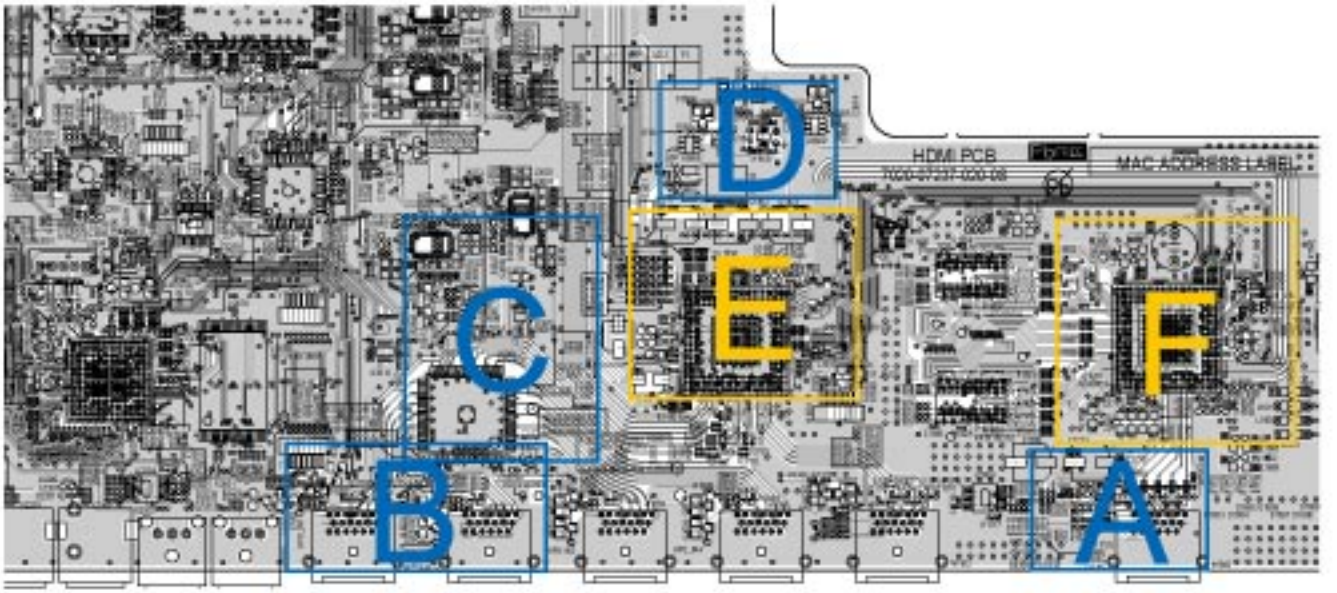

(COMPONENT SIDE)

Detail A

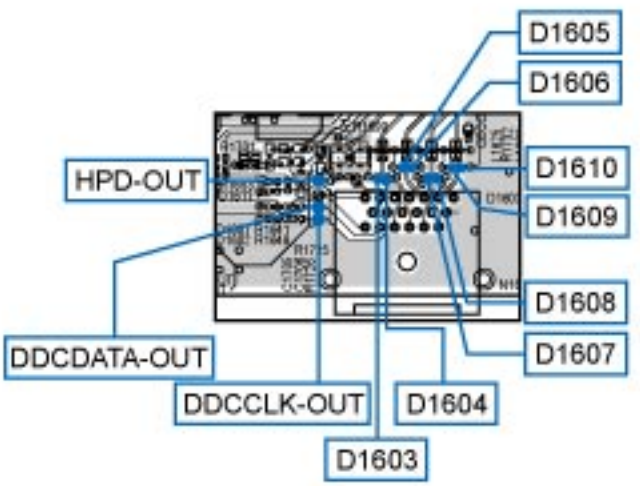

Detail B

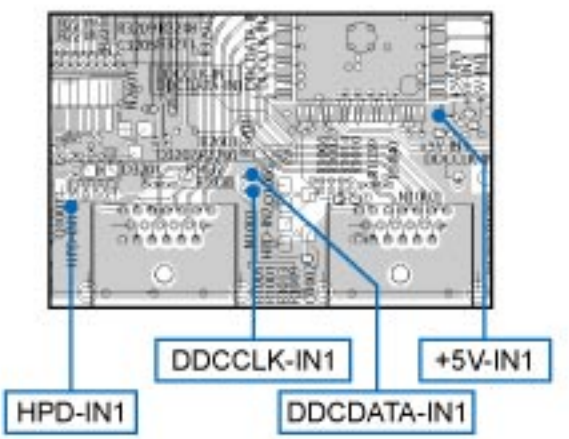

Detail C

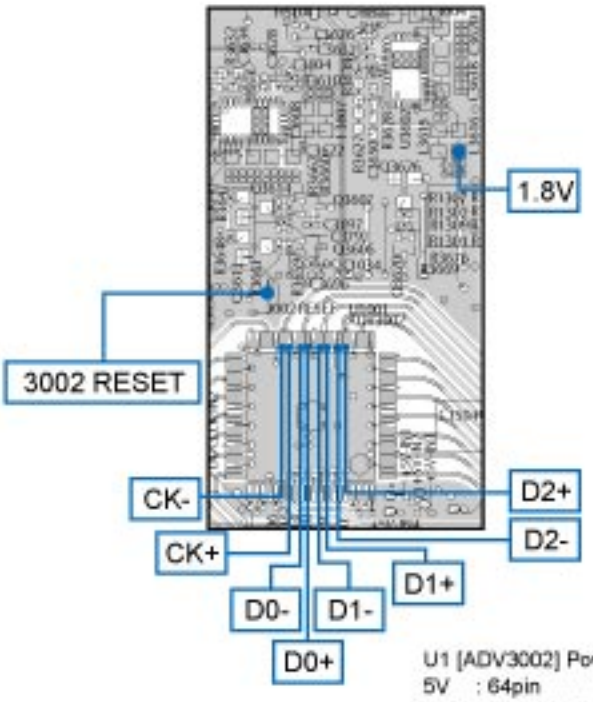

U1 [ADV3002] Power pin
5V : 64pin
3.3V : 9pin / 18pin / 33pin / 43pin /52pin

Detail D

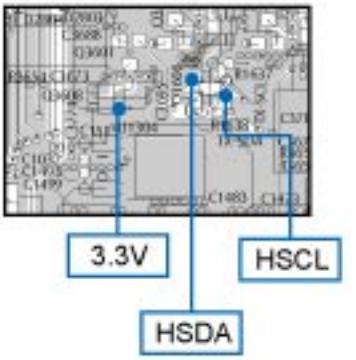

Detail E

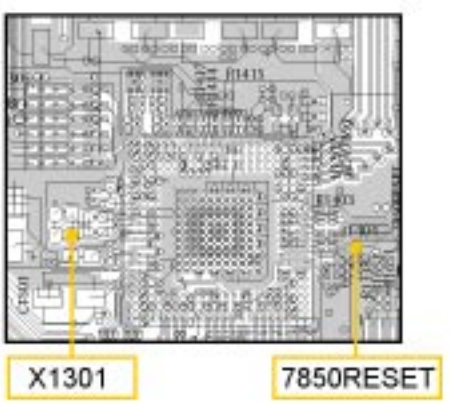

Detail F

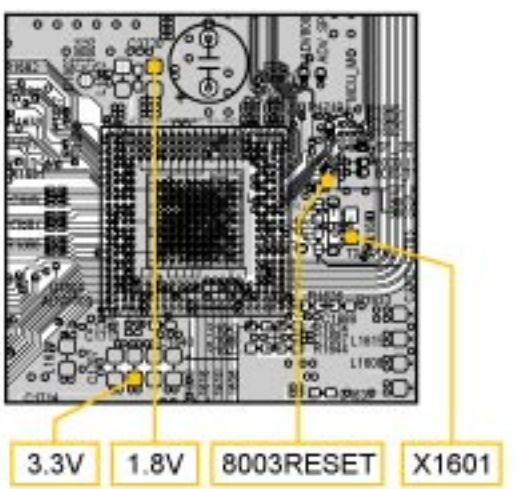

DDC_CLK/DDC_DATA/TMDS : Check items HDMI to HDMI (17)/(19)/(24)

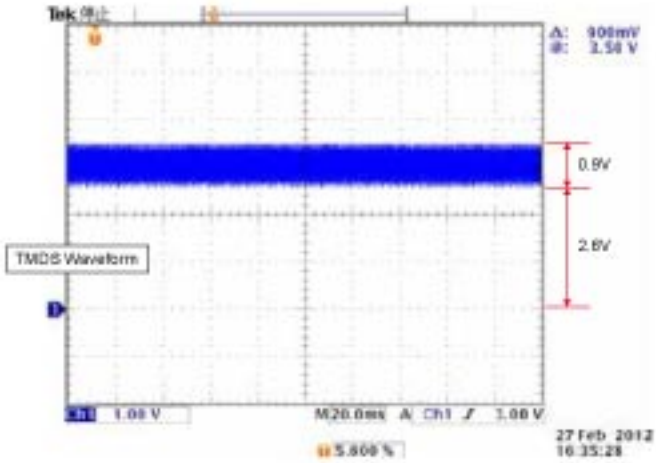

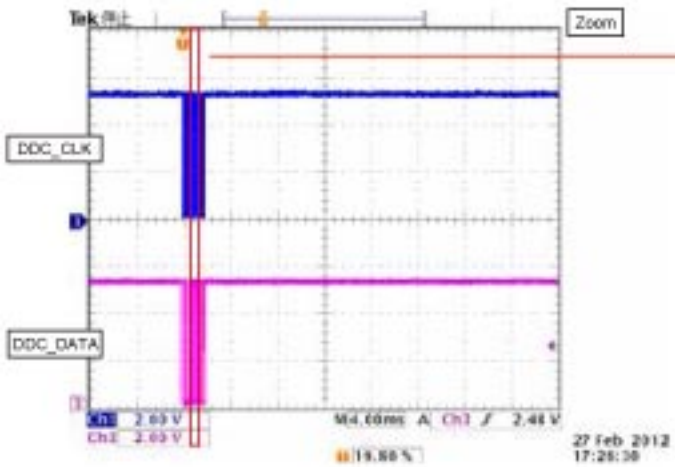

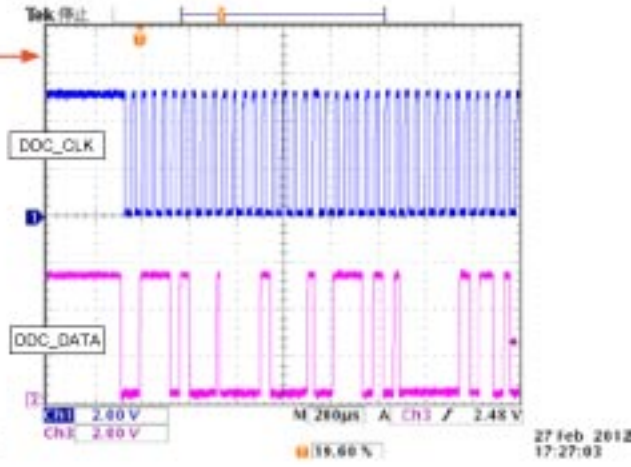

Timing waveform illustration from the start of CEC3.3V to when reset is released : Check items (22)

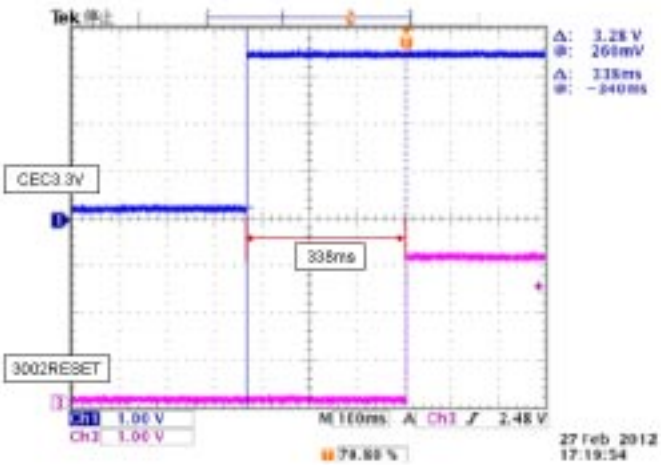

Controlled waveform (I2C), when power is turned on : Check items (23)

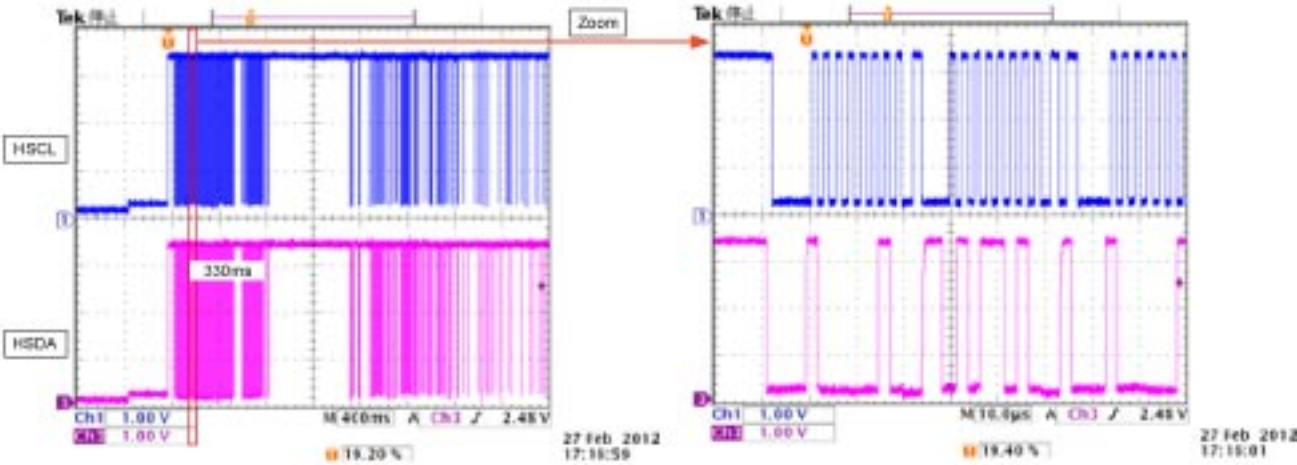

Timing waveform illustration from the start of CEC3.3V to when reset is released : Check items (27)

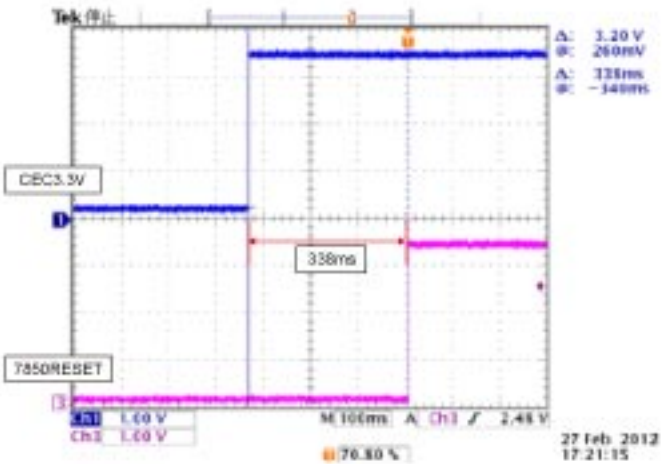

Timing waveform illustration from the start of CEC3.3V to when reset is released : Check items (30)

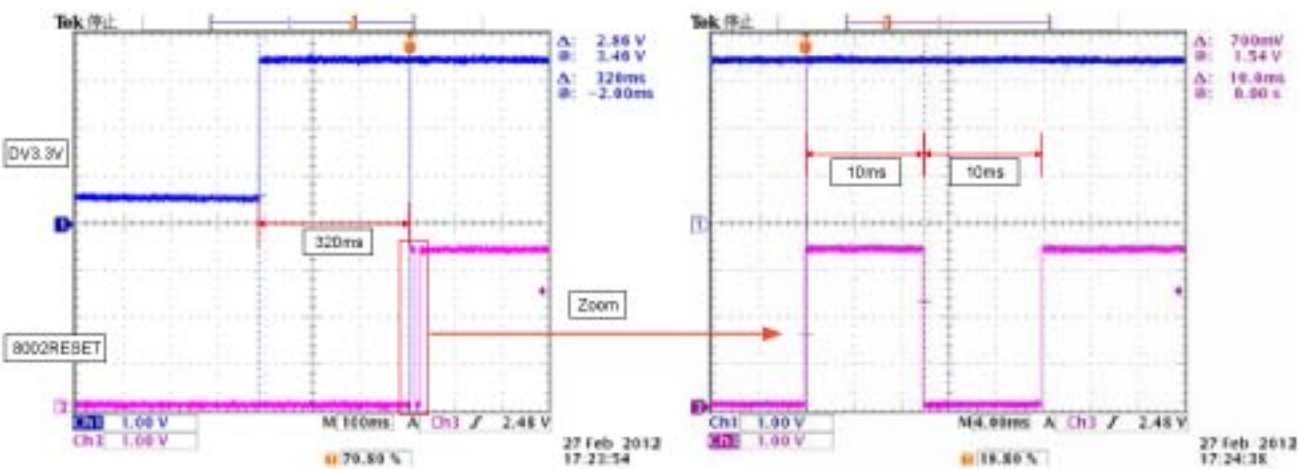

4. AUDIO

4.1. AUDIO CHECK

Audio output NG.

Refer to "Audio Check PATH" (103 page).

CHECK1	INPUT	SURROND MODE	SOURCE
Audio output OK?	ANALOG 2CH	DIRECT	ANALOG

NO → Check ANALOG audio BLOCK.

YES ↓

CHECK2	INPUT	SURROND MODE	SOURCE
Audio output OK?	COAX or OPT	Don't care	Legacy (PCM or DolbyDigital or dts...)

NO → Check Digital audio BLOCK.

YES ↓

CHECK3	INPUT	SURROND MODE	SOURCE
Audio output OK?	ANALOG 2CH	MULTICH STEREO	ANALOG

NO → Check ADC BLOCK

YES ↓

CHECK4	INPUT	SURROND MODE	SOURCE
Audio output OK?	HDMI	Don't care	Legacy (PCM2ch or DolbyDigital or dts...)

NO → Check HDMI BLOCK.

YES ↓

CHECK5	INPUT	SURROND MODE	SOURCE
Audio output OK?	HDMI	Don't care	HBR audio (DolbyTrueHD or dtsHD MA)

YES (Digital audio Block is OK) ↓

Check other factors.

NO ↓

CHECK6	INPUT	Connect	
AVR's (connected in HDMI) audio output OK?	HDMI	This unit's HDMI OUT → Other AVR's HDMI IN	
	Setting	SURROND MODE	SOURCE
	CEC STANDBY	Don't care	HBR audio(DolbyTrueHD or dtsHD MA)

YES ↓ Check Digital audio BLOCK

NO ↓ Check HDMI BLOCK.

4.2. Power AMP (AMP UNIT)

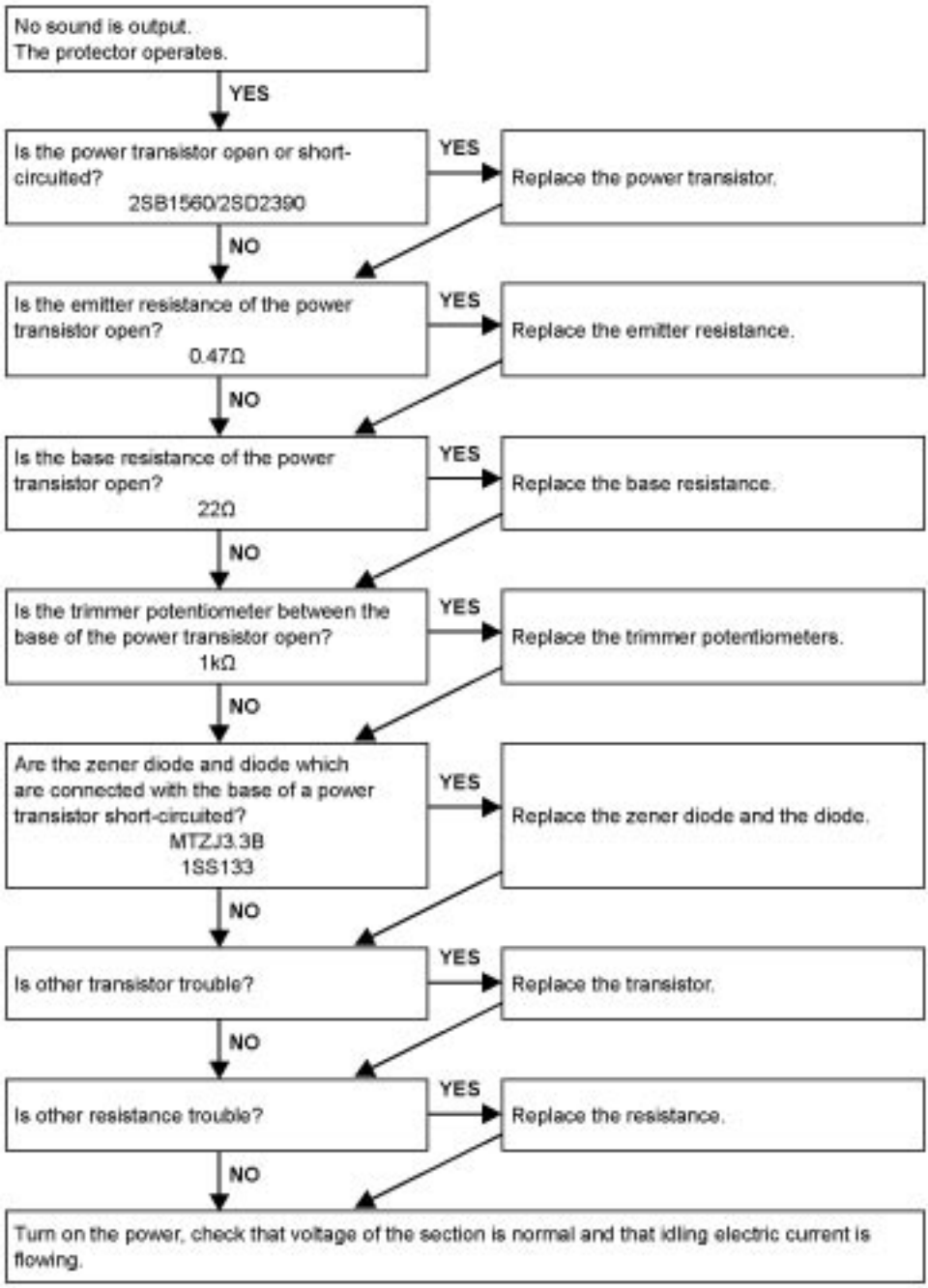

4.3. Analog audio

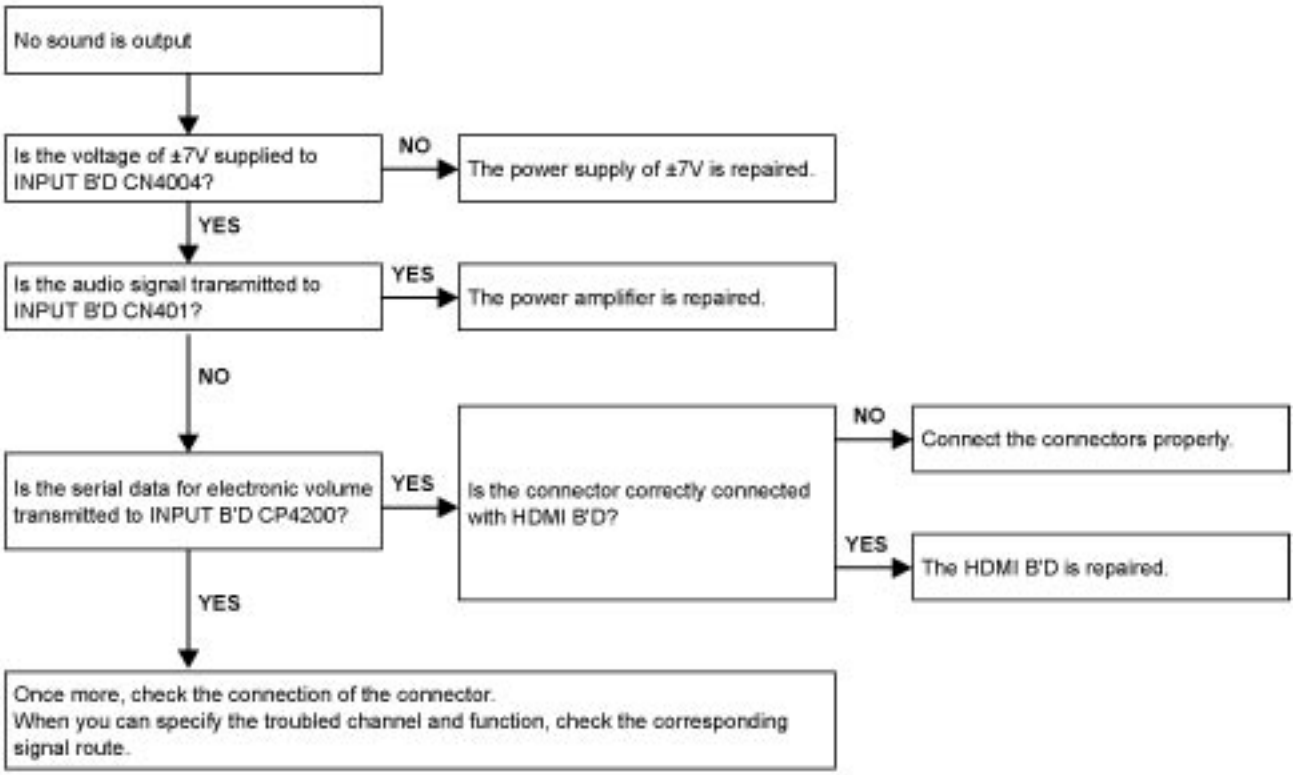

5. Network/USB

5.1. Cannot connect to network

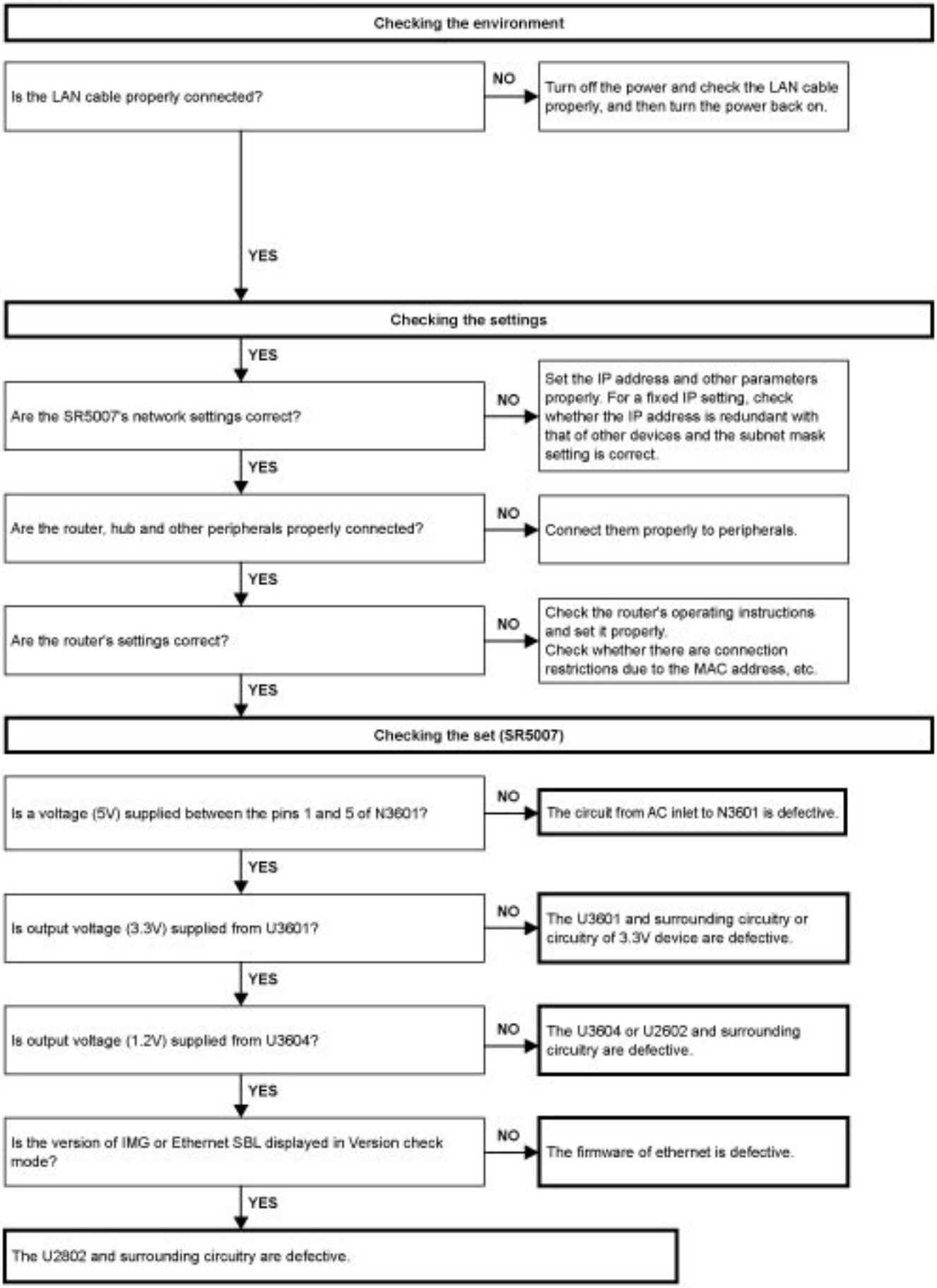

5.2. USB device is not recognized

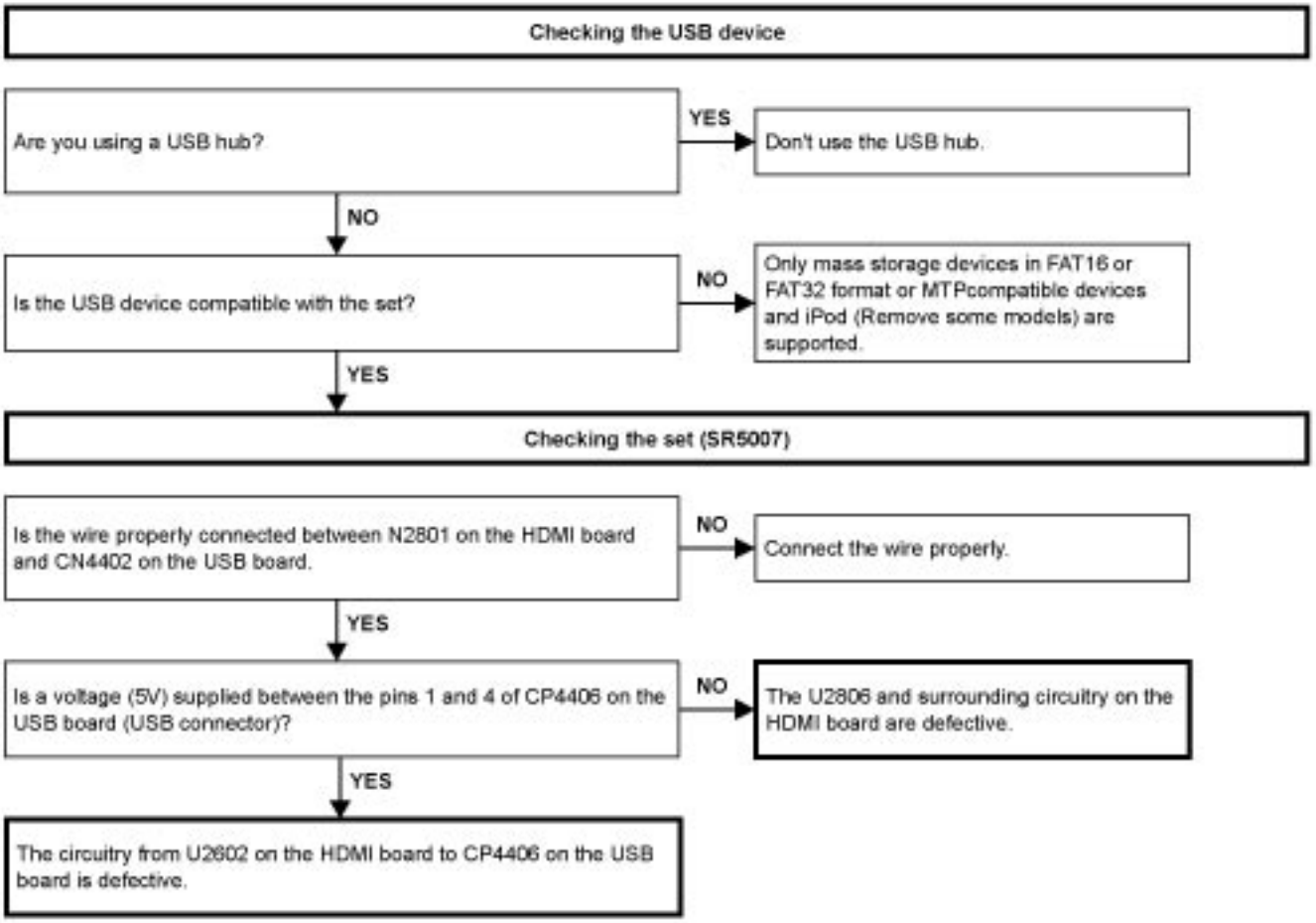

5.3. No picture or no sound is output

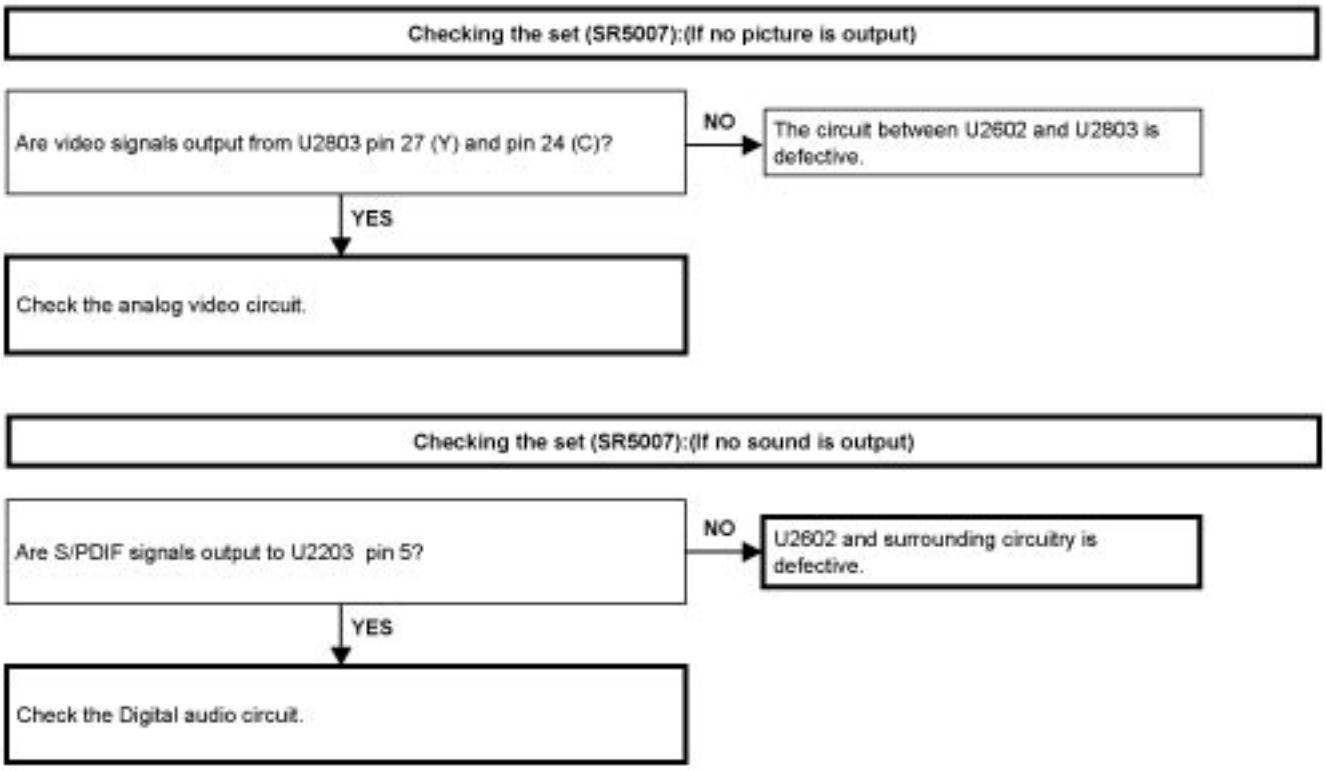

HDMI test point

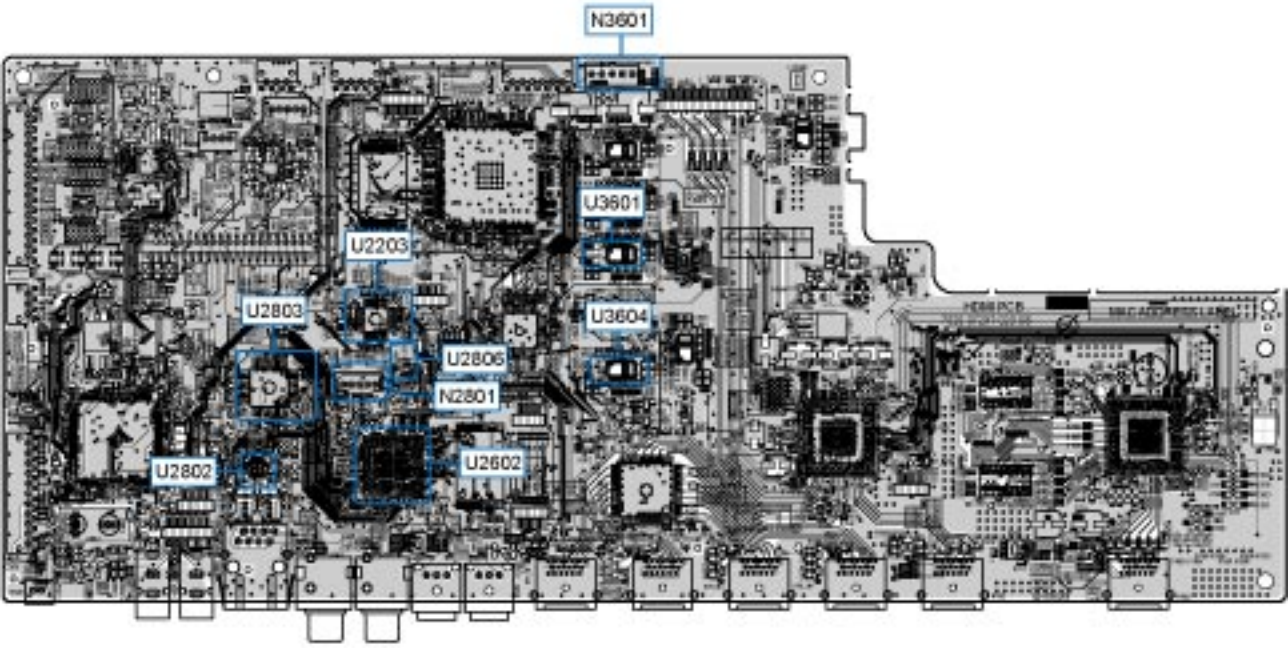

(COMPONENT SIDE)

USB test point

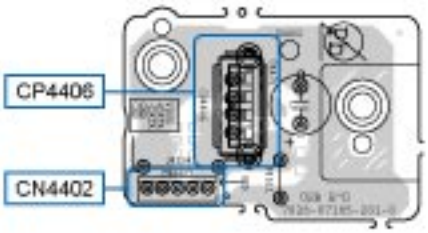

(COMPONENT SIDE)

6. SMPS

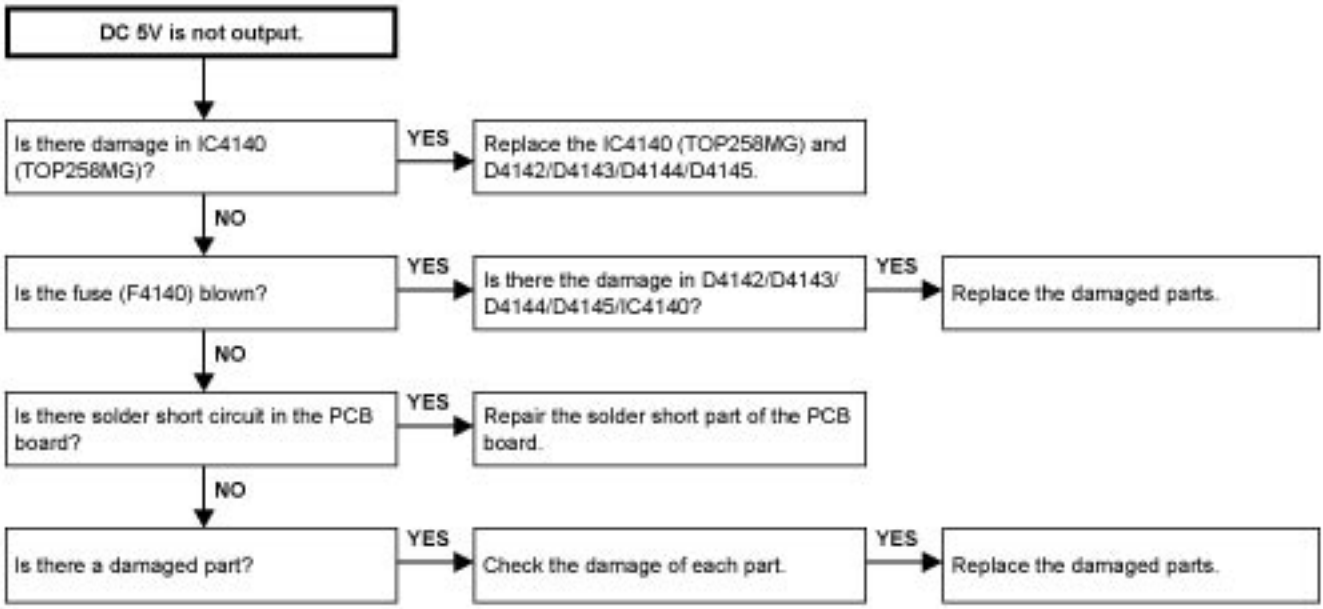
DC 5V is not output.
Is there damage in IC4140 (TOP258MG)?
YES
Replace the IC4140 (TOP258MG) and D4142/D4143/D4144/D4145.
NO
Is the fuse (F4140) blown?
YES
Is there the damage in D4142/D4143/ D4144/D4145/IC4140?
YES
Replace the damaged parts.
NO
Is there solder short circuit in the PCB board?
YES
Repair the solder short part of the PCB board.
NO
Is there a damaged part?
YES
Check the damage of each part.
YES
Replace the damaged parts.

Operation waveform for each part

SMPS B'D

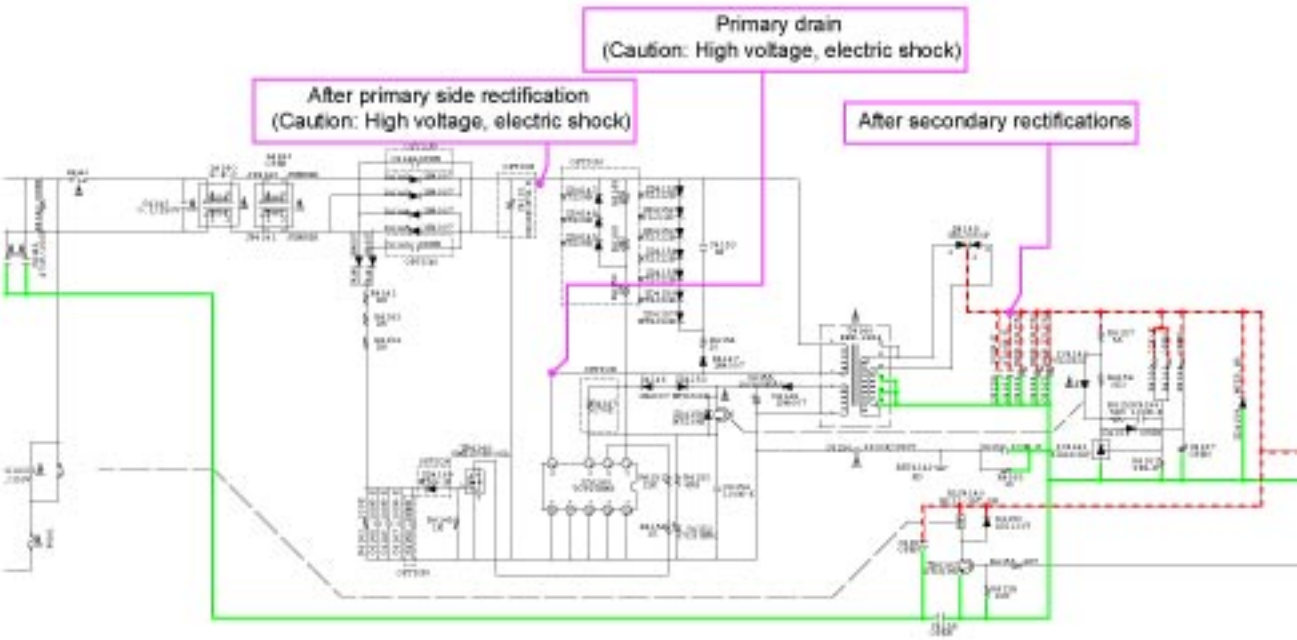

SMPS unit
(Unloaded)

A

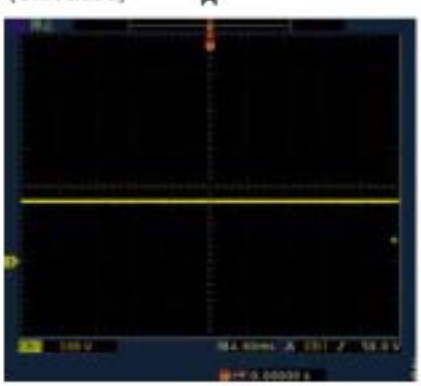

B

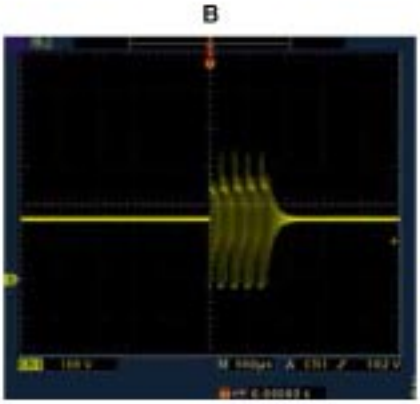

C

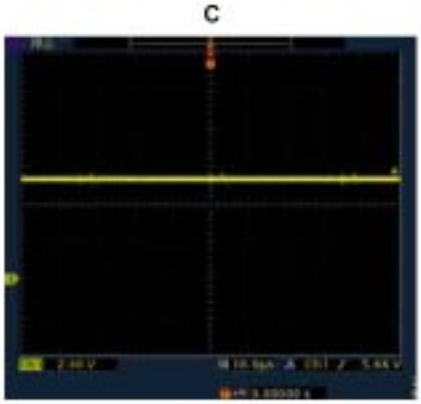

Set

A

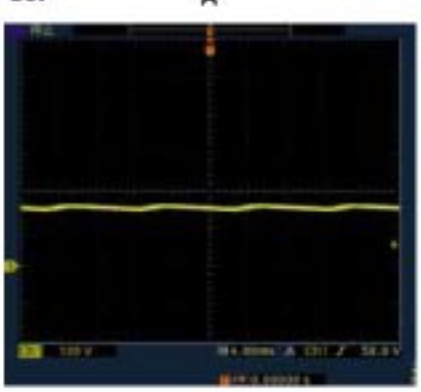

B

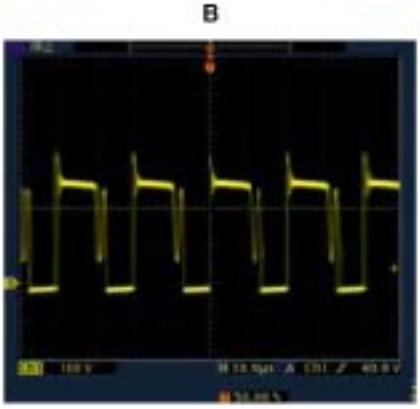

C

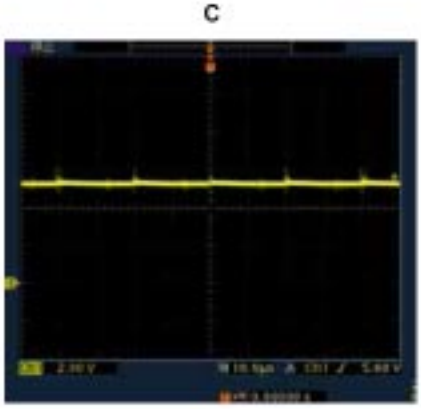

Personal notes:

Audio Check PATH

Refer to troubleshooting "**4.1. AUDIO CHECK**"(94 page).

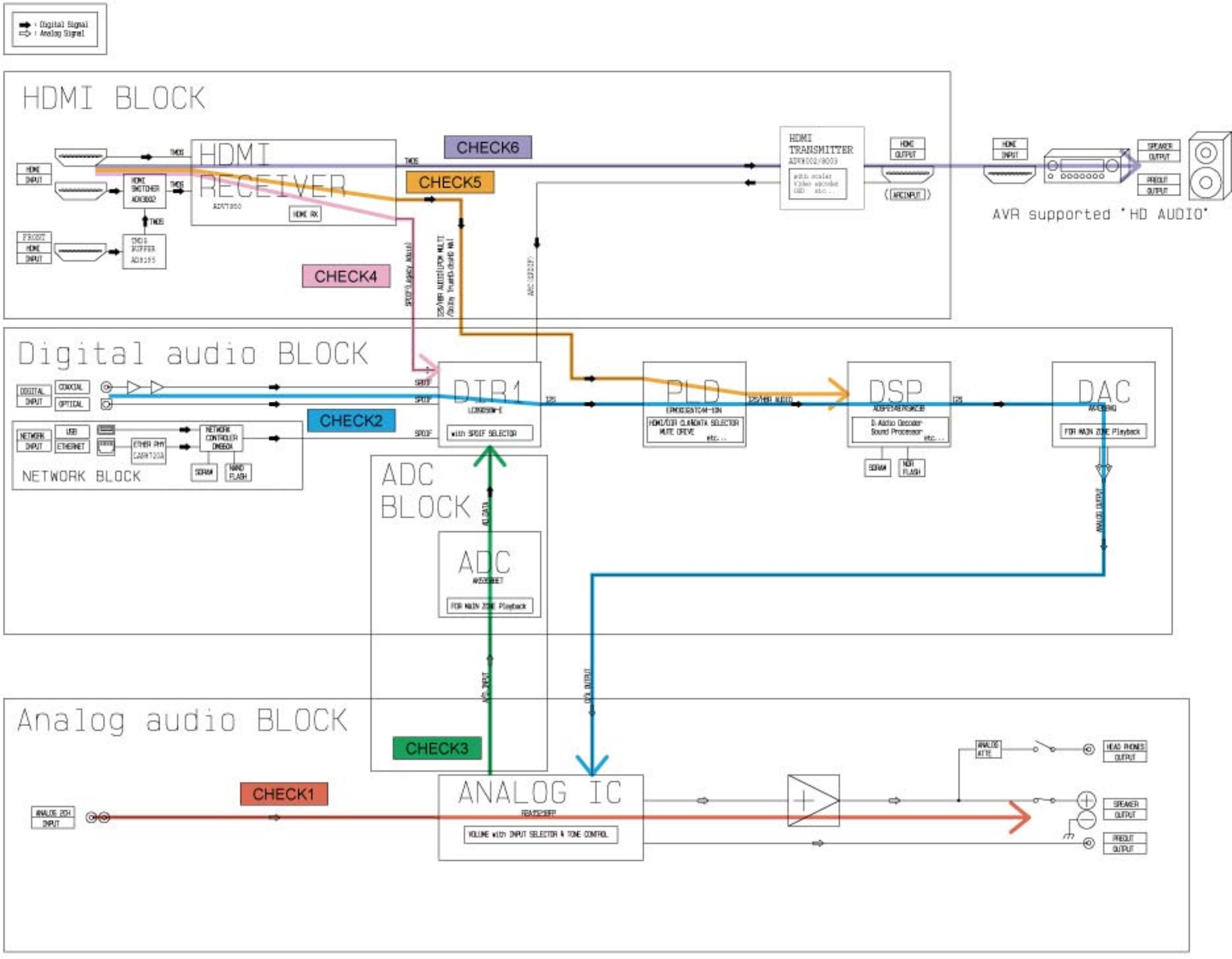

CLOCK FLOW & WAVE FORM IN DIGITAL BLOCK

WAVE FORM

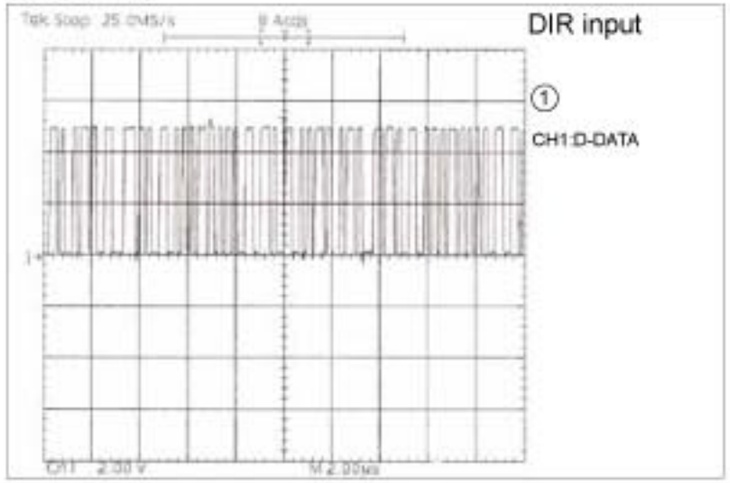

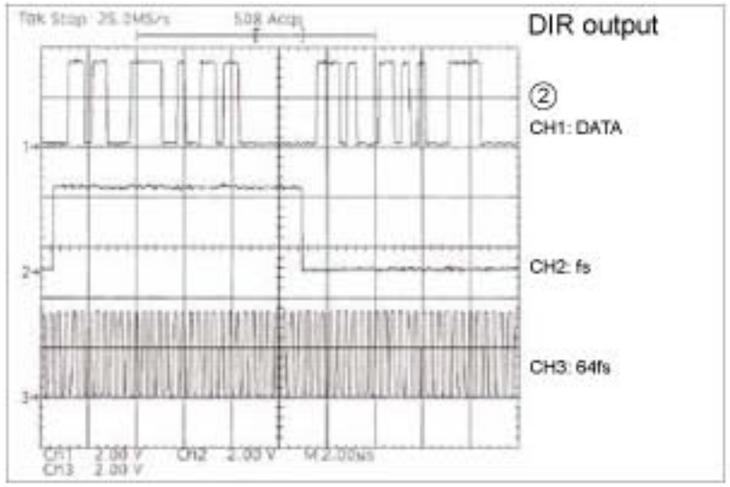

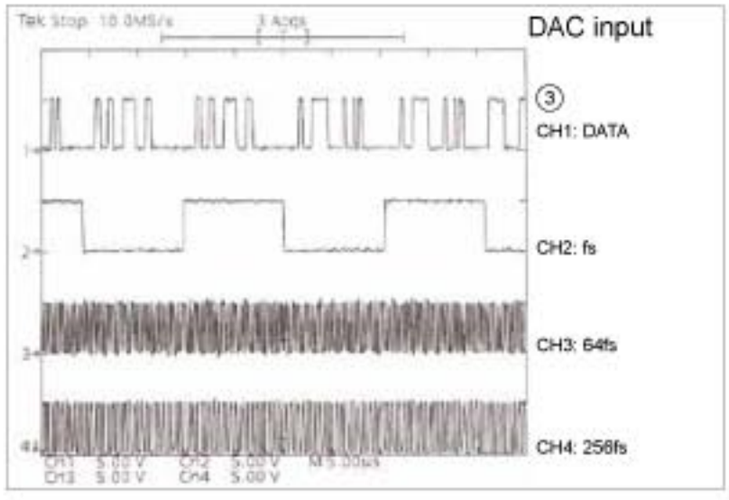

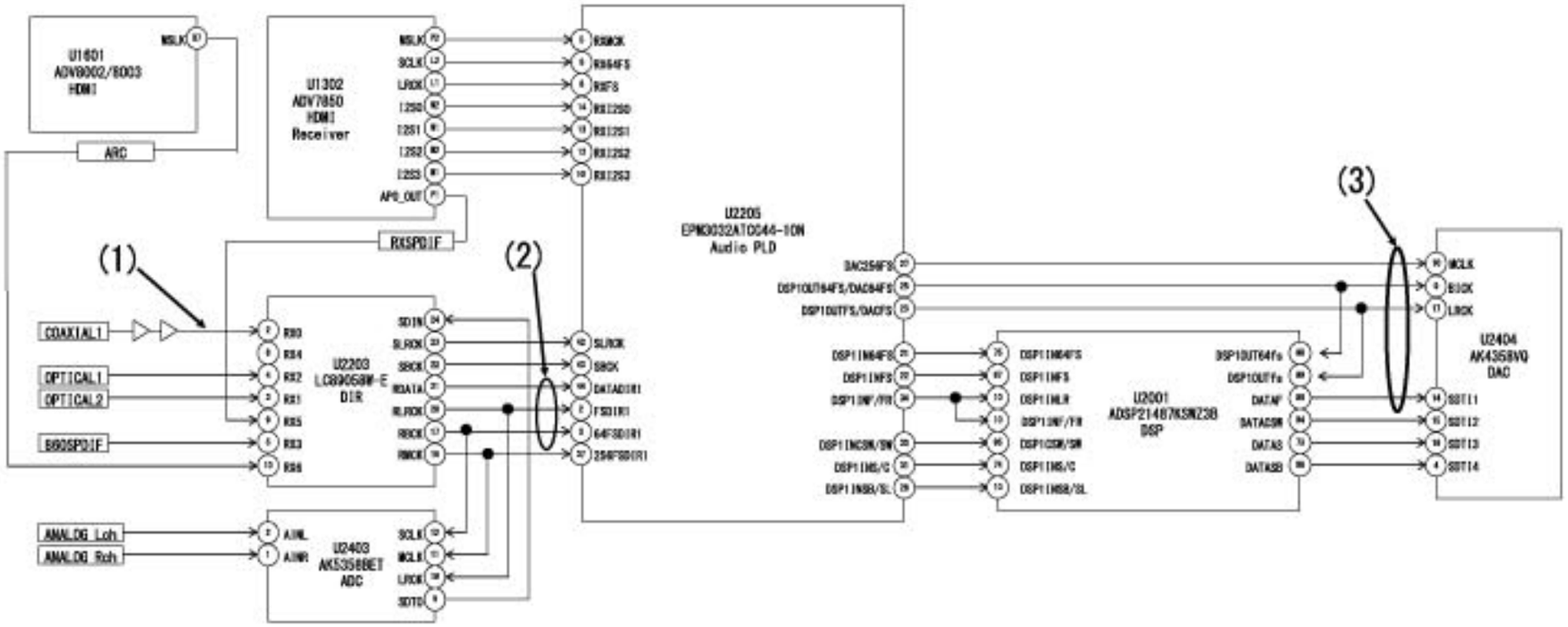

Test point

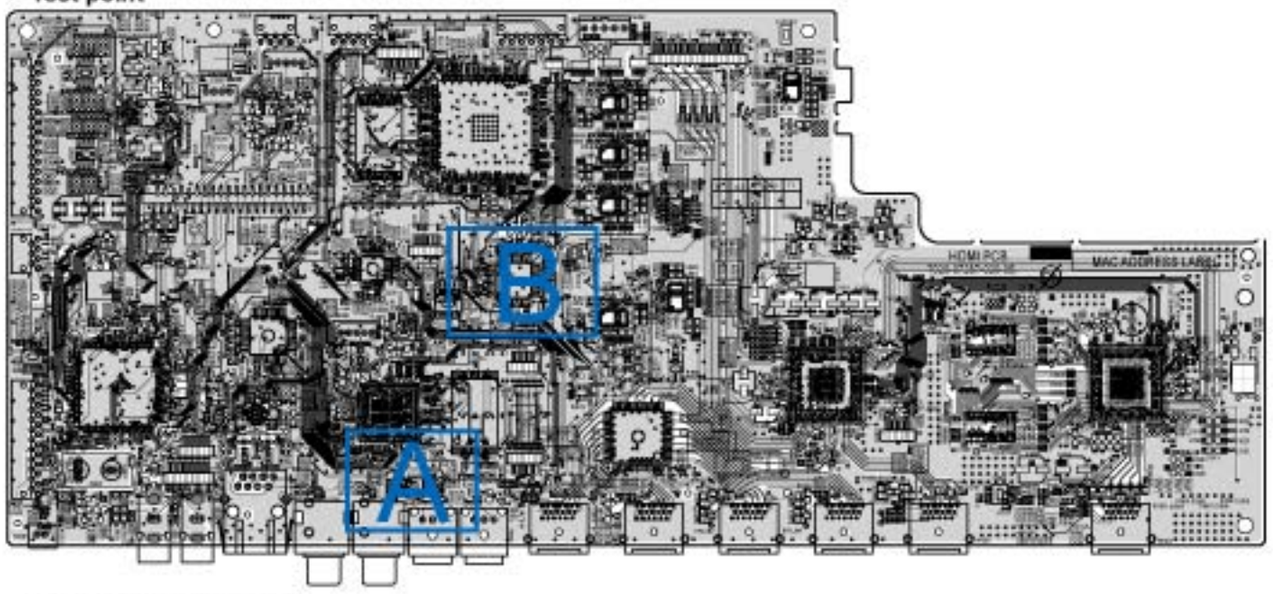

HDMI (COMPONENT SIDE)

Detail A

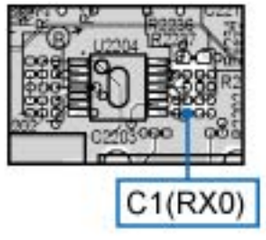

Detail B

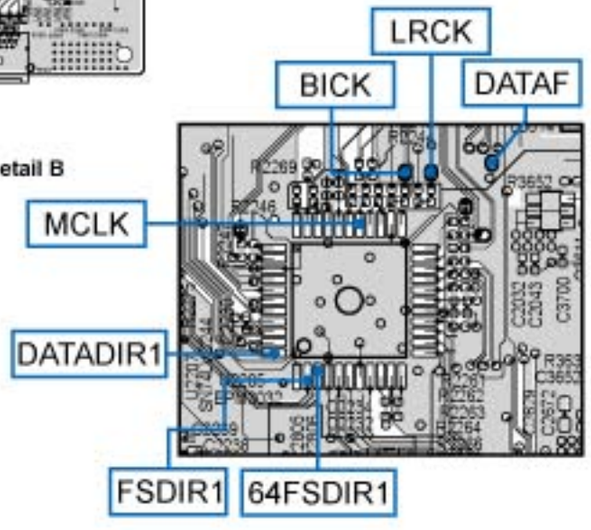

LEVEL DIAGRAM

LEVEL DIAGRAM
FRONT ch

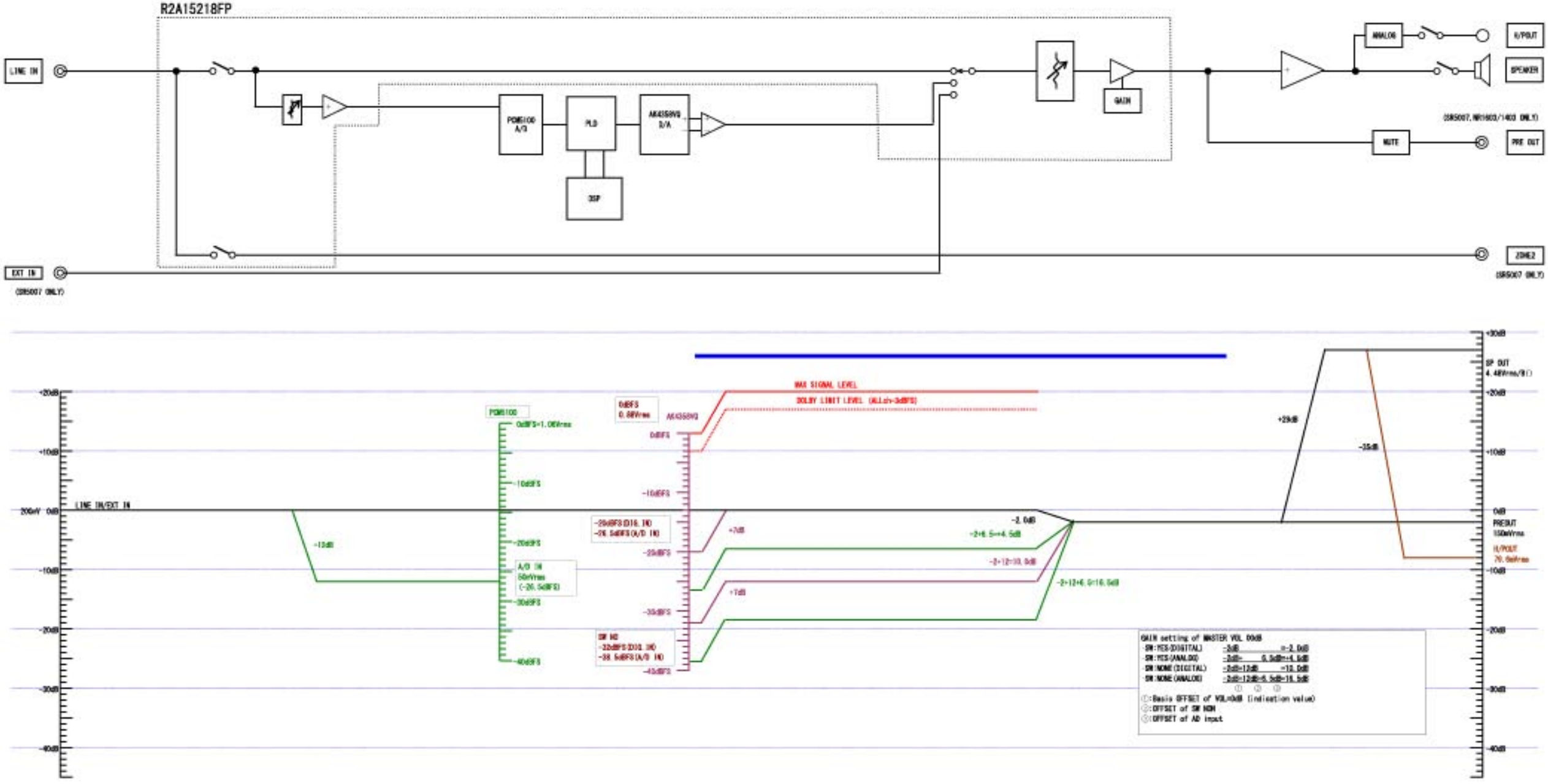

LEVEL DIAGRAM
CENTER ch

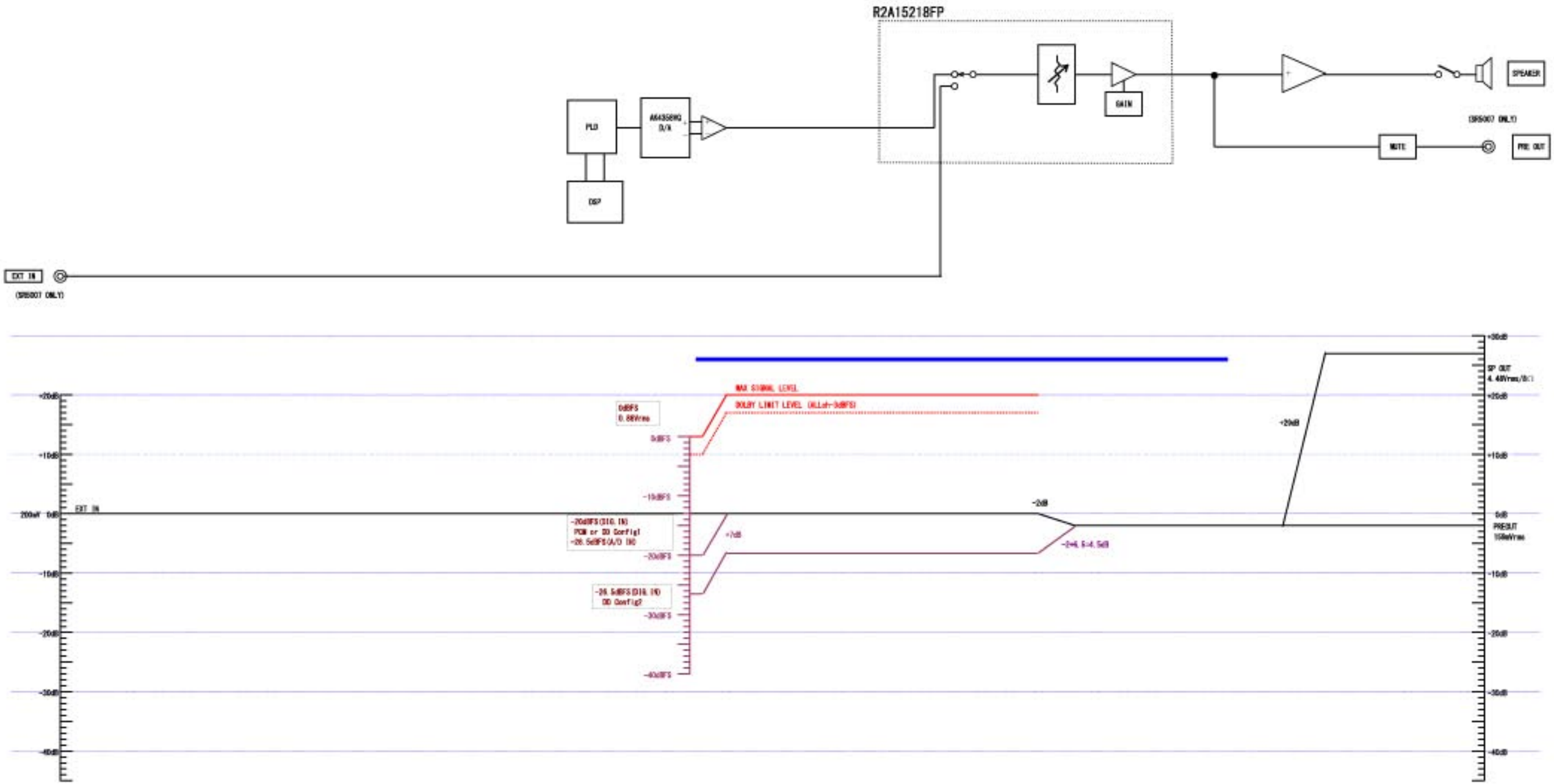

LEVEL DIAGRAM
SUBWOOFER ch

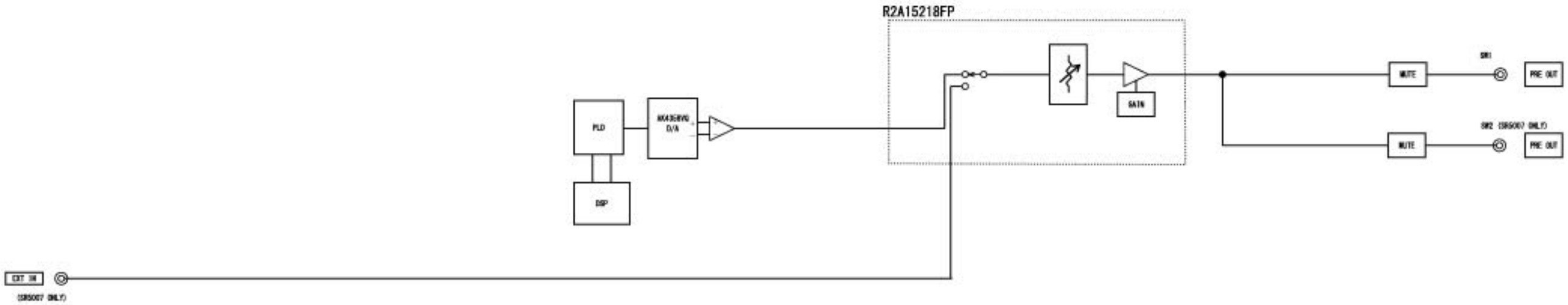

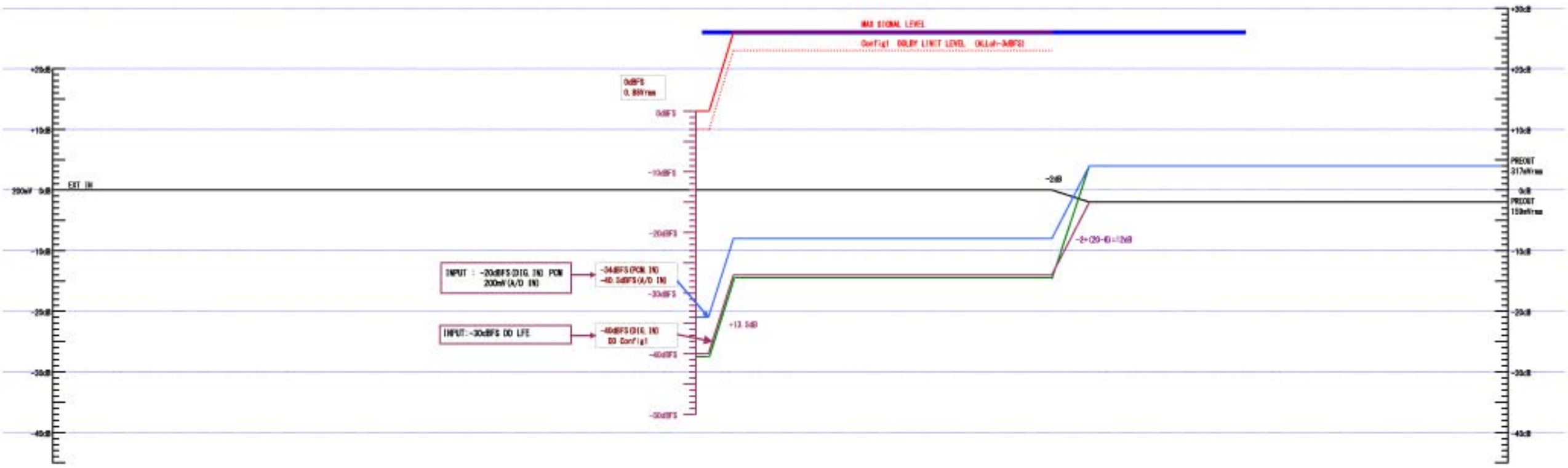

LEVEL DIAGRAM
SURROUND ch

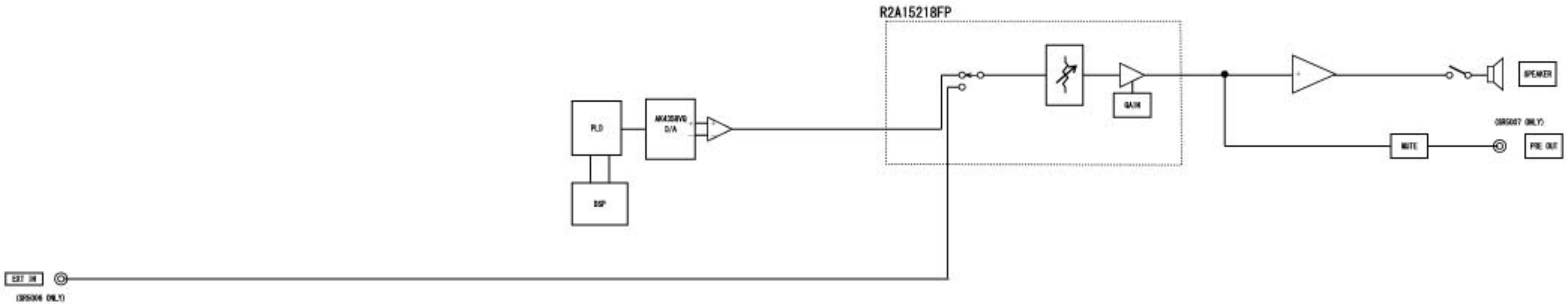

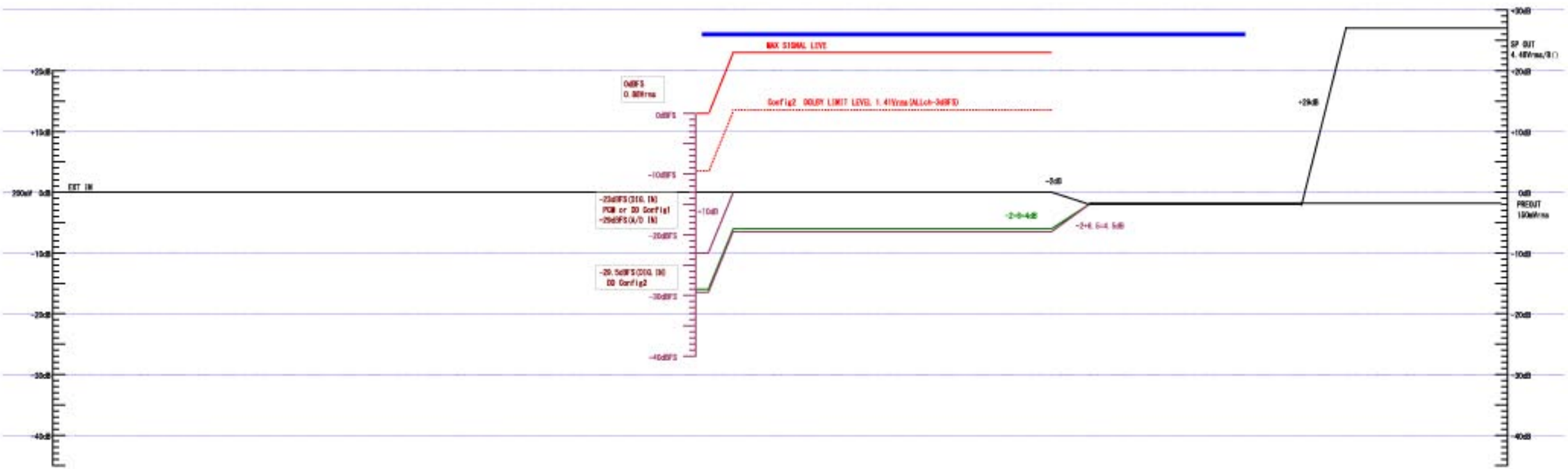

LEVEL DIAGRAM
SURR.BACK ch

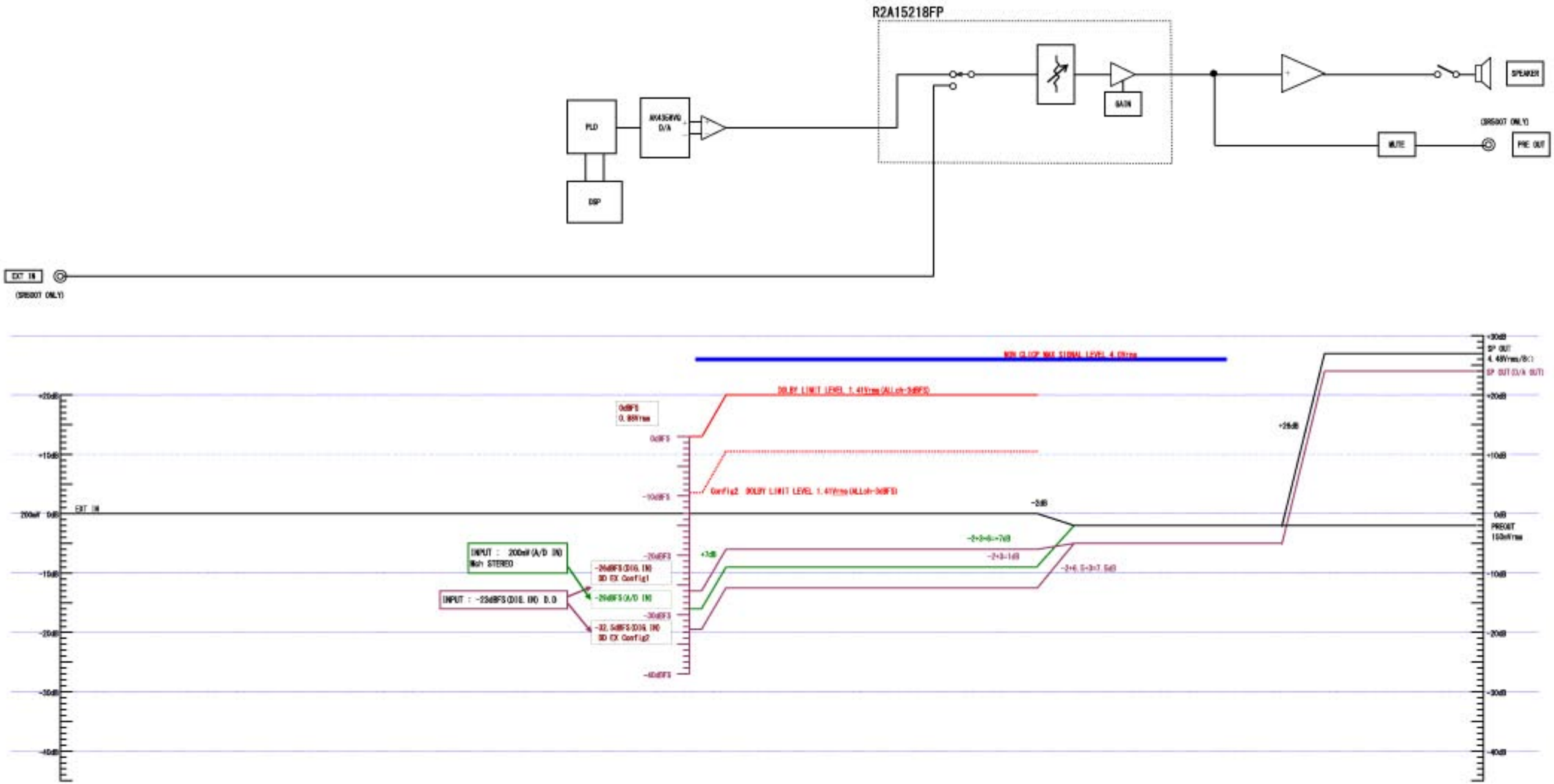

LEVEL DIAGRAM
ZONE 2

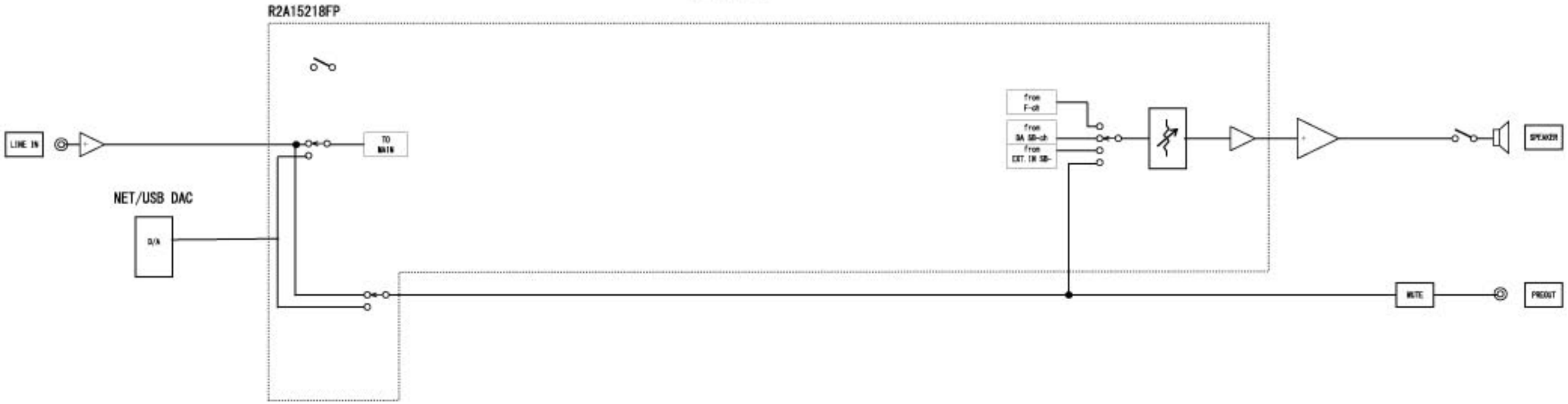

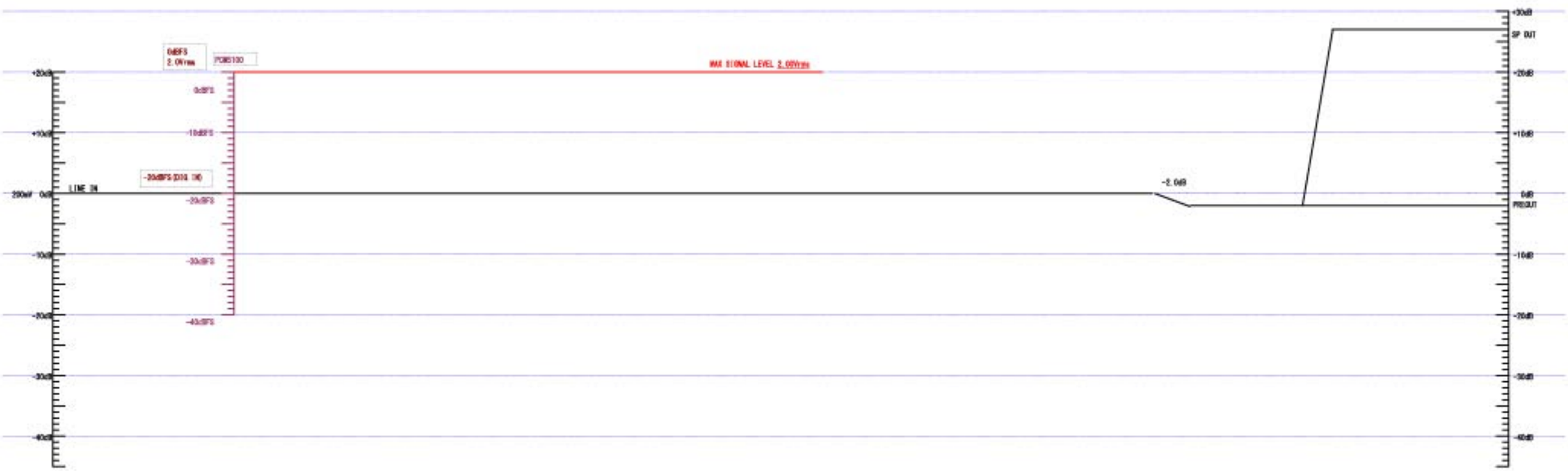

HDMI
(COMPONENT SIDE)

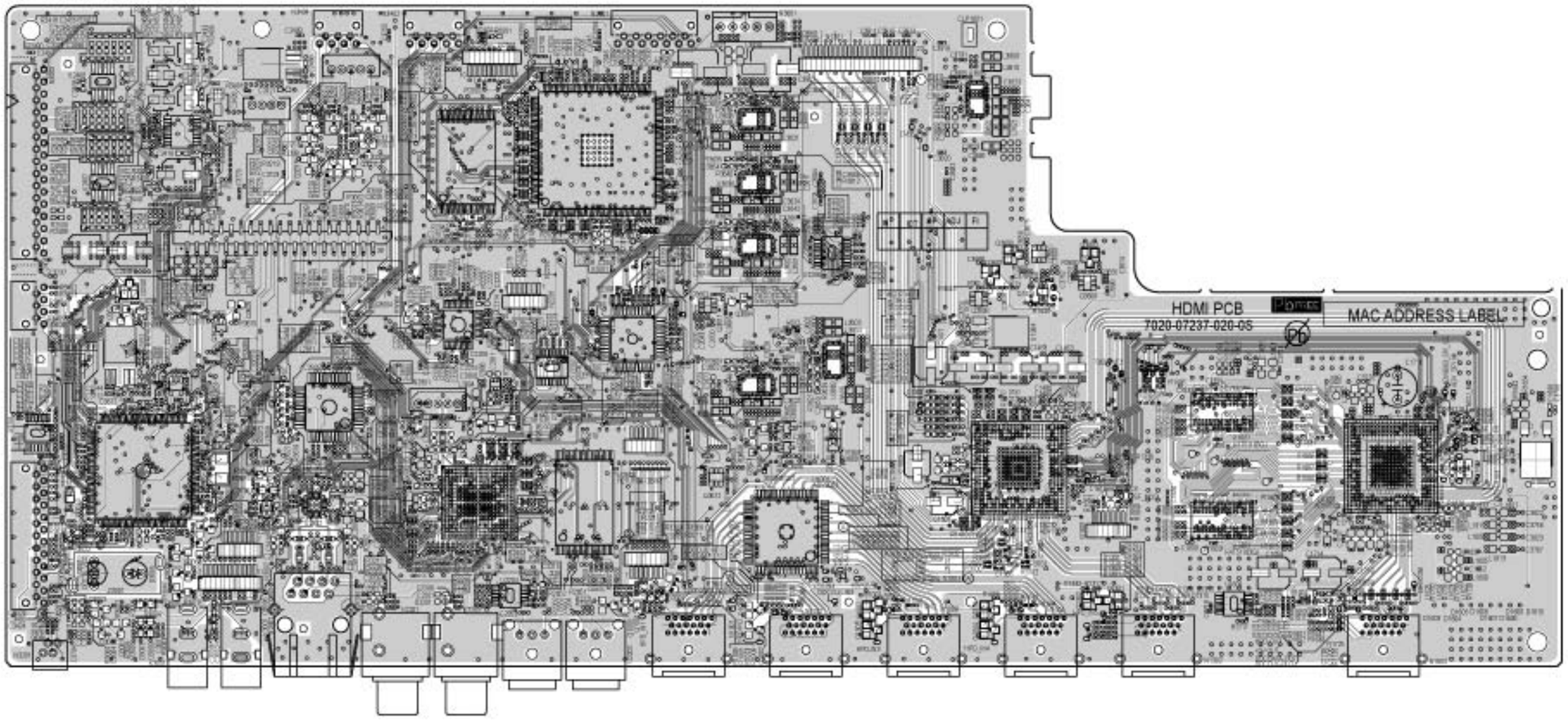

鉛フリー半田
半田付けには、鉛フリー半田 (Sn-Ag-Cu) を使用してください。

Lead-free Solder
When soldering, use the Lead-free Solder (Sn-Ag-Cu).

HDMI
(FOIL SIDE)

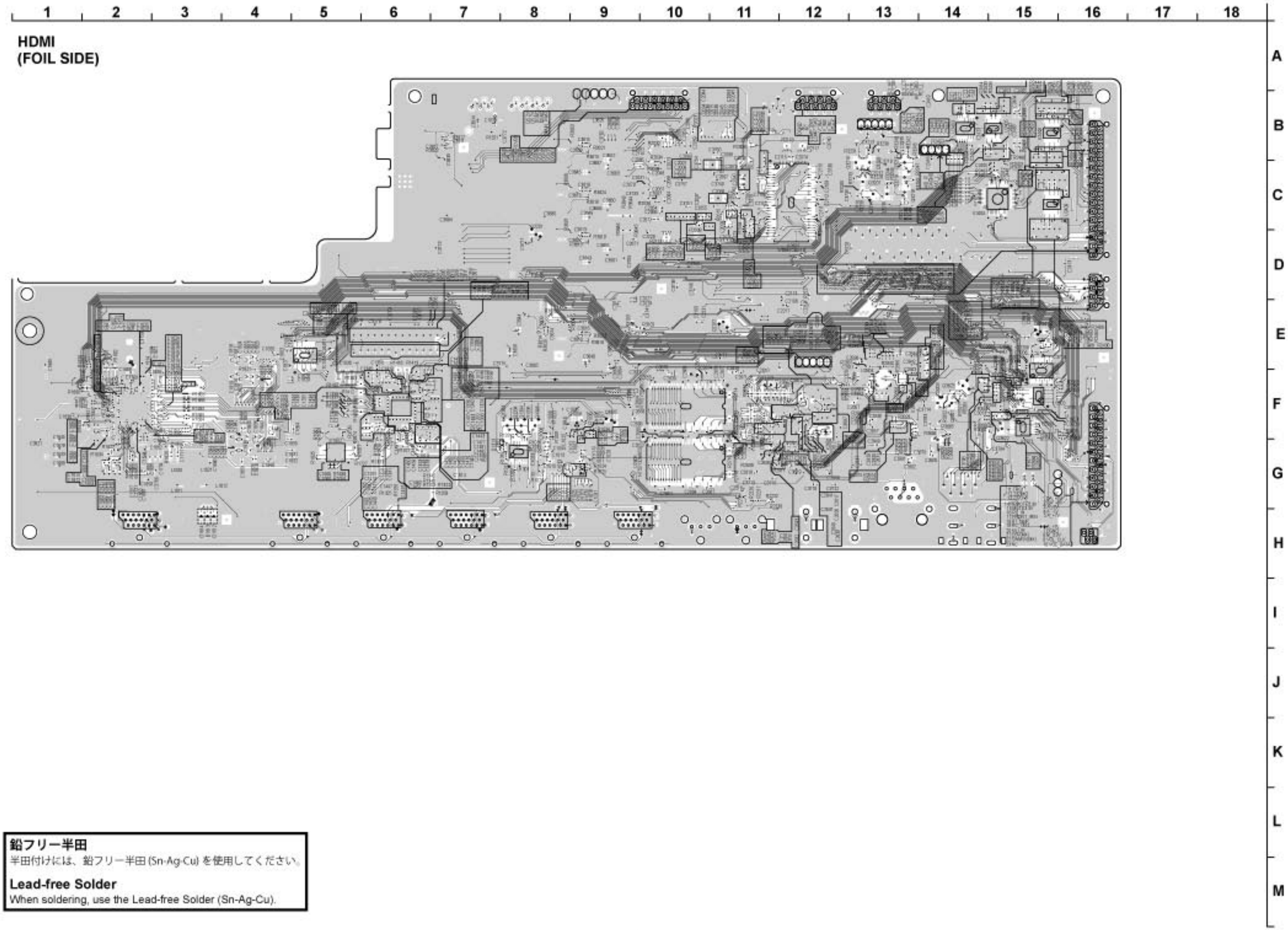

鉛フリー半田
半田付けには、鉛フリー半田 (Sn-Ag-Cu) を使用してください。

Lead-free Solder
When soldering, use the Lead-free Solder (Sn-Ag-Cu).

FRONT HDMI (COMPONENT SIDE)

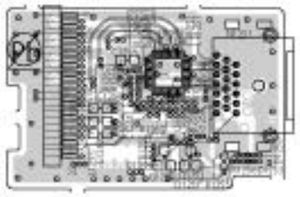

FRONT HDMI (FOIL SIDE)

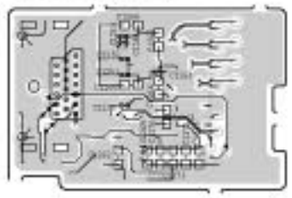

OPTIONAL CIRCUIT (COMPONENT SIDE)

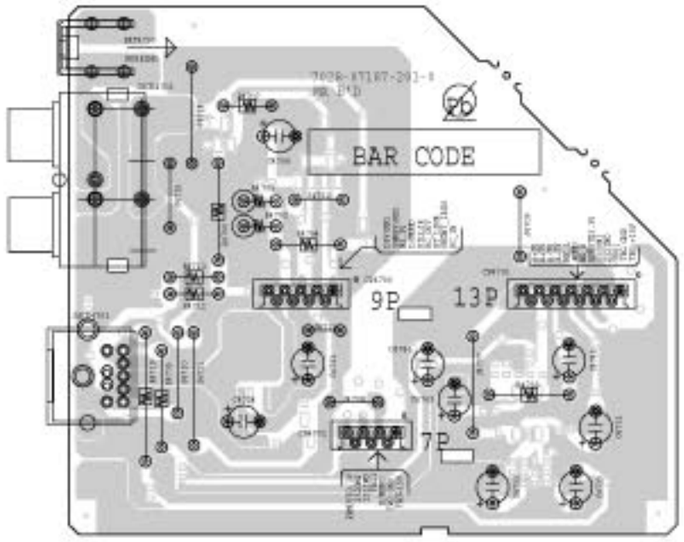

OPTIONAL CIRCUIT (FOIL SIDE)

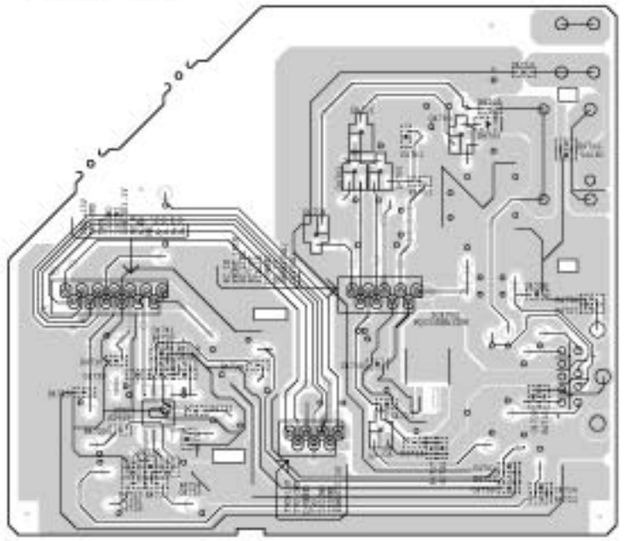

RS232 (COMPONENT SIDE)

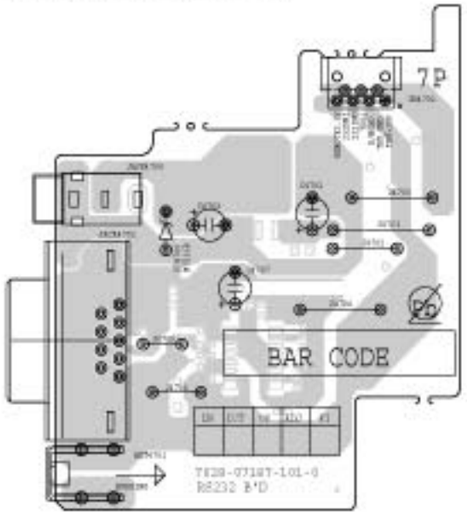

RS232 (FOIL SIDE)

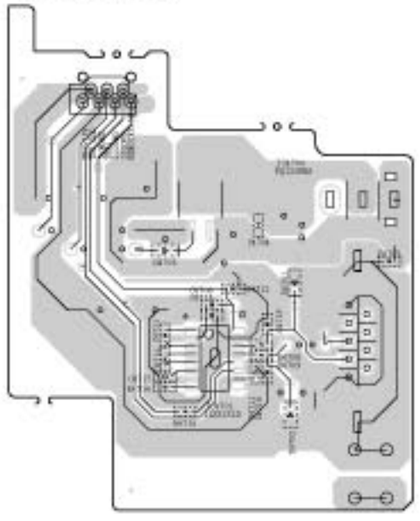

鉛フリー半田
半田付けには、鉛フリー半田 (Sn-Ag-Cu) を使用してください。

Lead-free Solder
When soldering, use the Lead-free Solder (Sn-Ag-Cu).

FRONT
(COMPONENT SIDE)

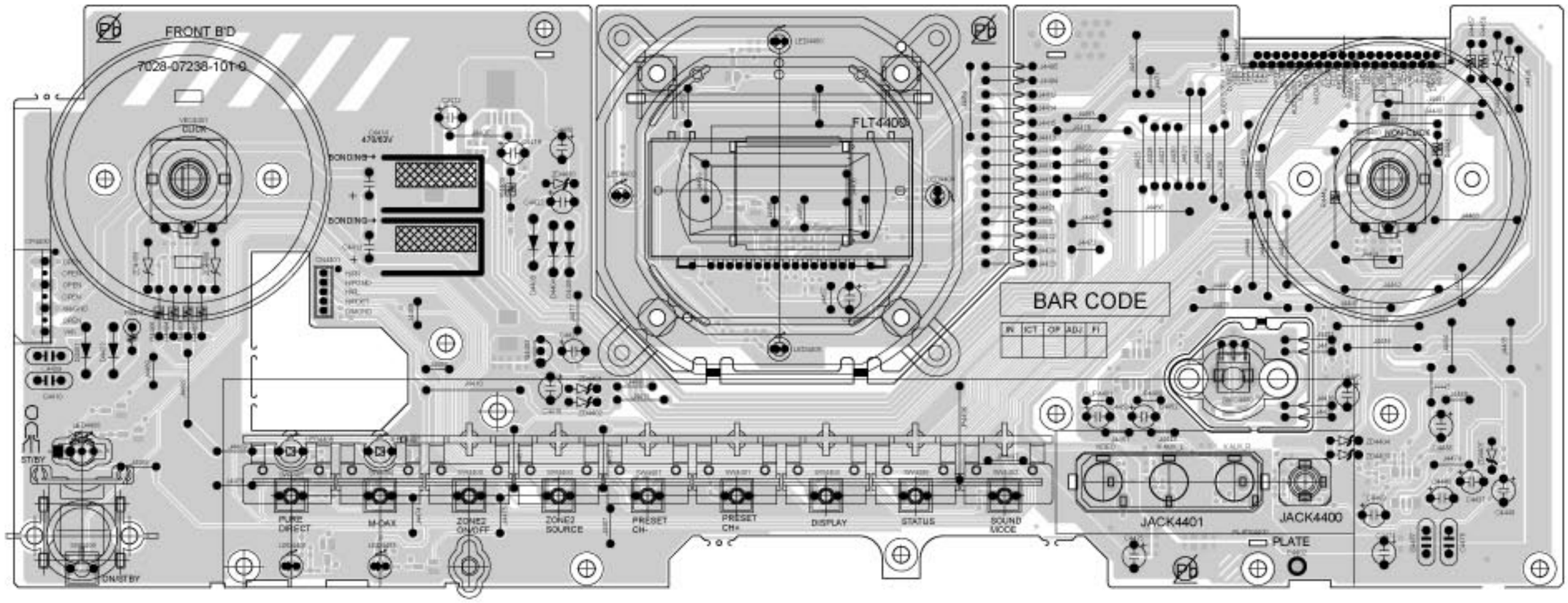

鉛フリー半田
半田付けには、鉛フリー半田 (Sn-Ag-Cu) を使用してください。

Lead-free Solder
When soldering, use the Lead-free Solder (Sn-Ag-Cu).

FRONT
(FOIL SIDE)

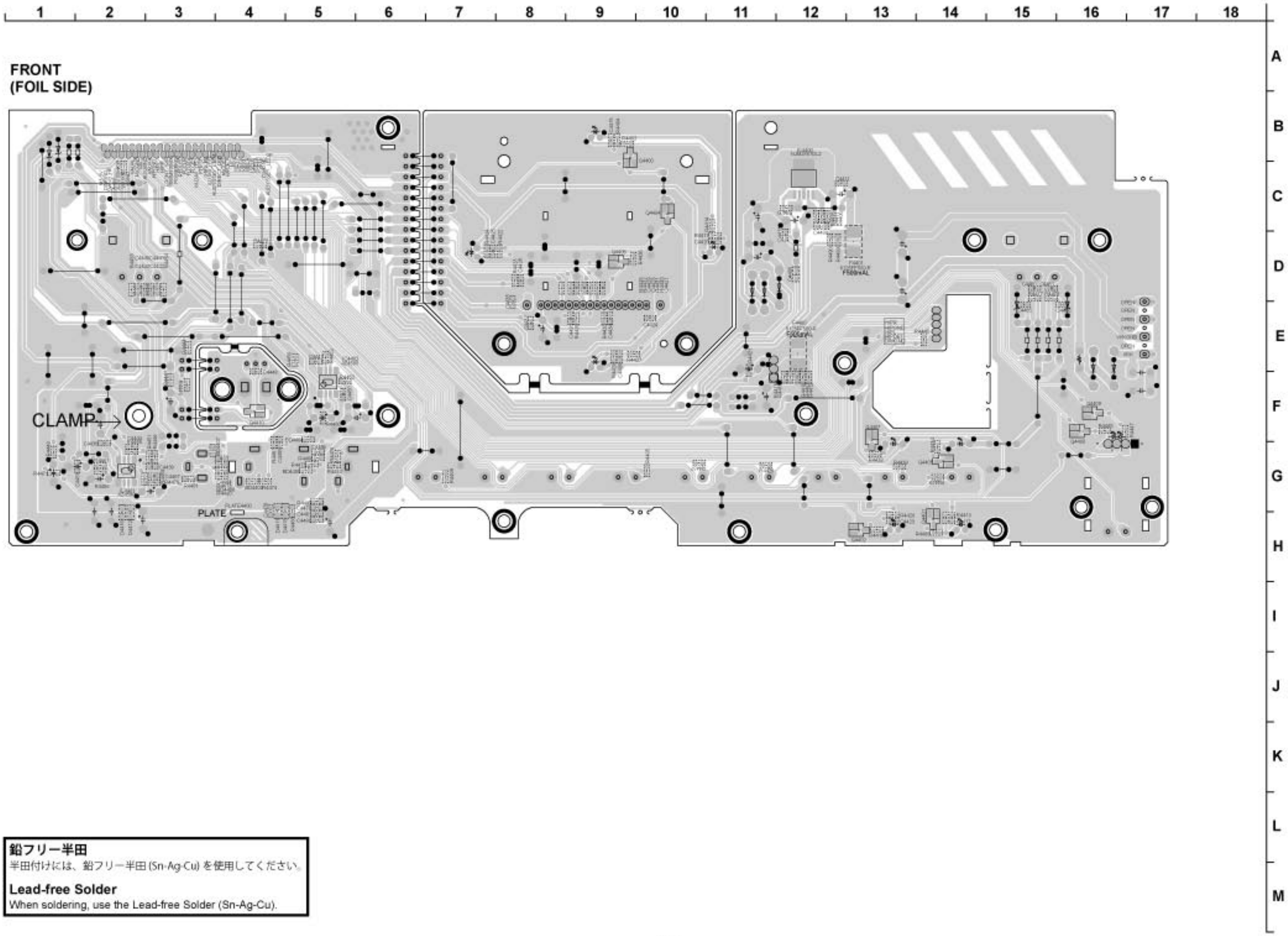

鉛フリー半田
半田付けには、鉛フリー半田 (Sn-Ag-Cu) を使用してください。

Lead-free Solder
When soldering, use the Lead-free Solder (Sn-Ag-Cu).

USB
(COMPONENT SIDE)

USB
(FOIL SIDE)

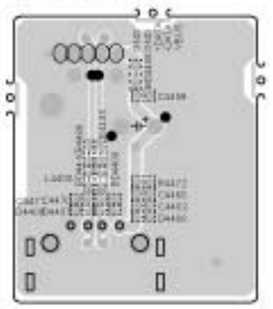

H/P
(COMPONENT SIDE)

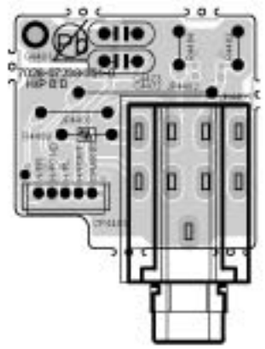

H/P
(FOIL SIDE)

TOP_GUIDE
(COMPONENT SIDE)

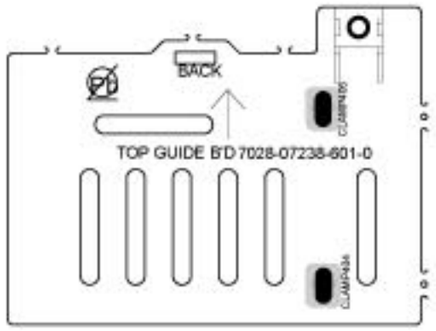

F/H _GUIDE
(COMPONENT SIDE)

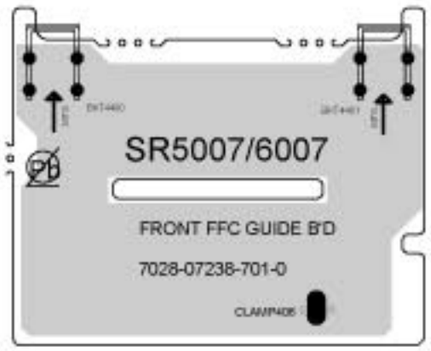

GUIDE L
(COMPONENT SIDE)

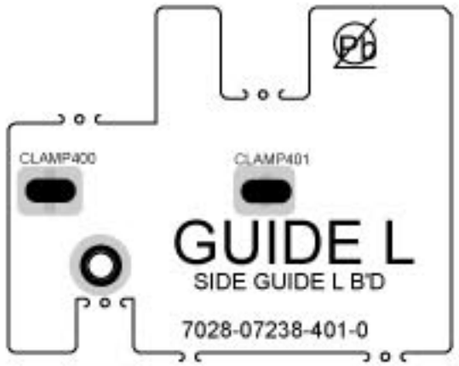

GUIDE R
(COMPONENT SIDE)

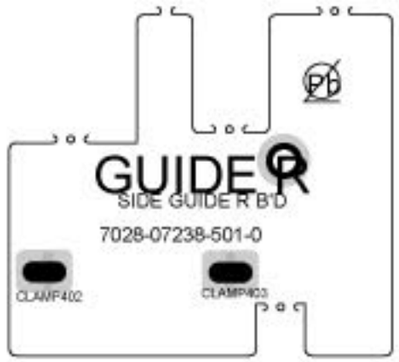

鉛フリー半田
半田付けには、鉛フリー半田 (Sn-Ag-Cu) を使用してください。

Lead-free Solder
When soldering, use the Lead-free Solder (Sn-Ag-Cu).

7CH AMP
(COMPONENT SIDE)

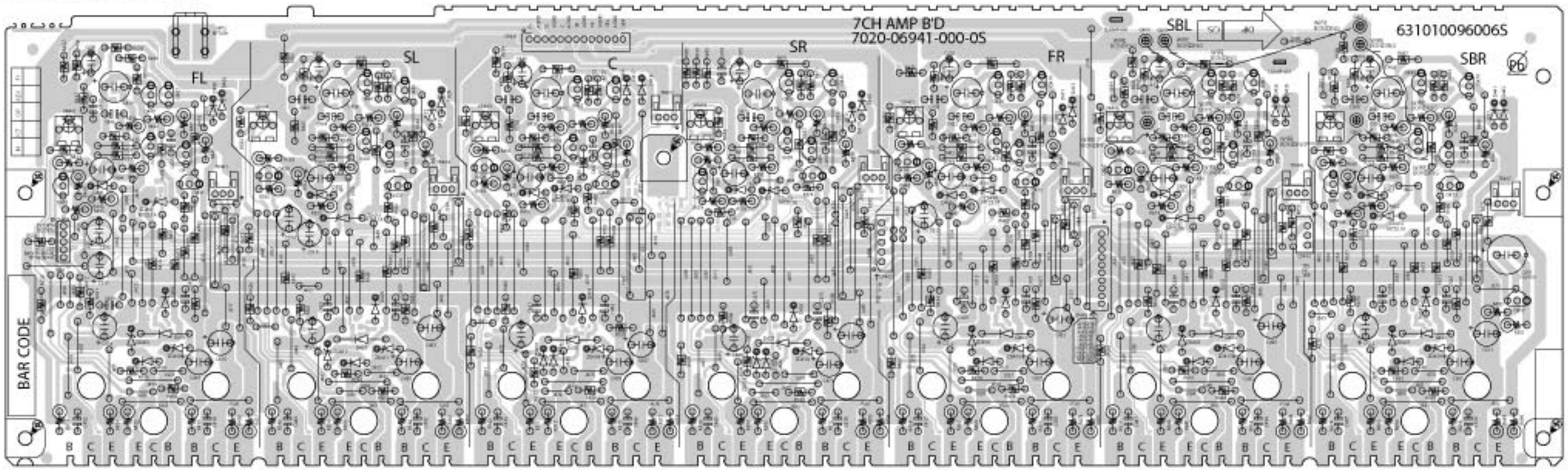

7CH AMP
(FOIL SIDE)

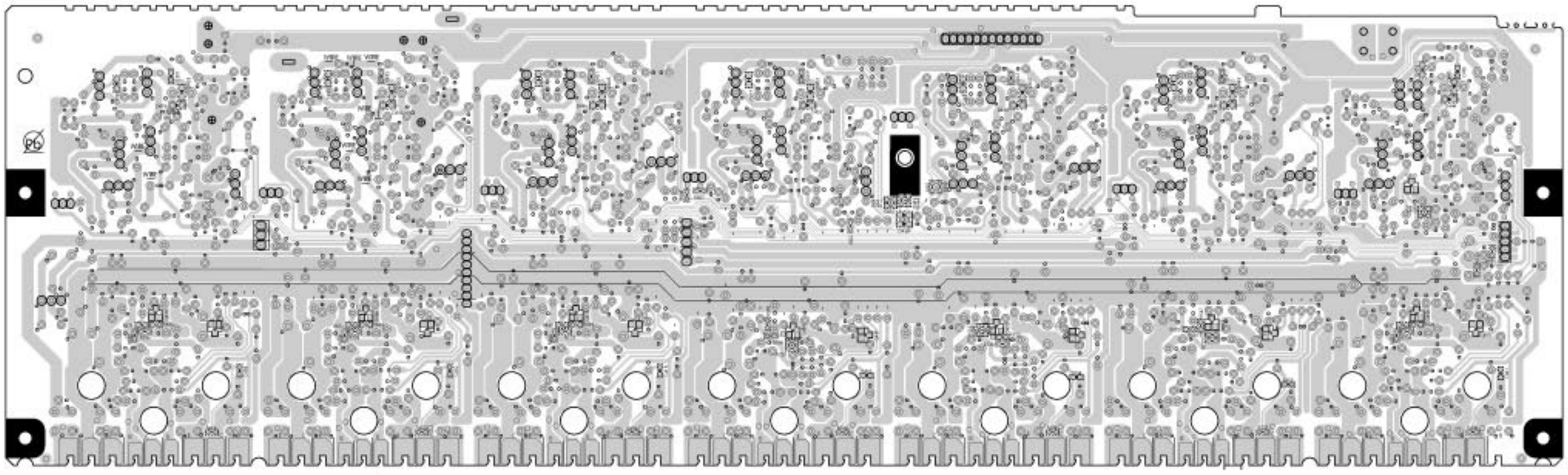

鉛フリー半田
半田付けには、鉛フリー半田 (Sn-Ag-Cu) を使用してください。

Lead-free Solder
When soldering, use the Lead-free Solder (Sn-Ag-Cu).

VIDEO
(COMPONENT SIDE)

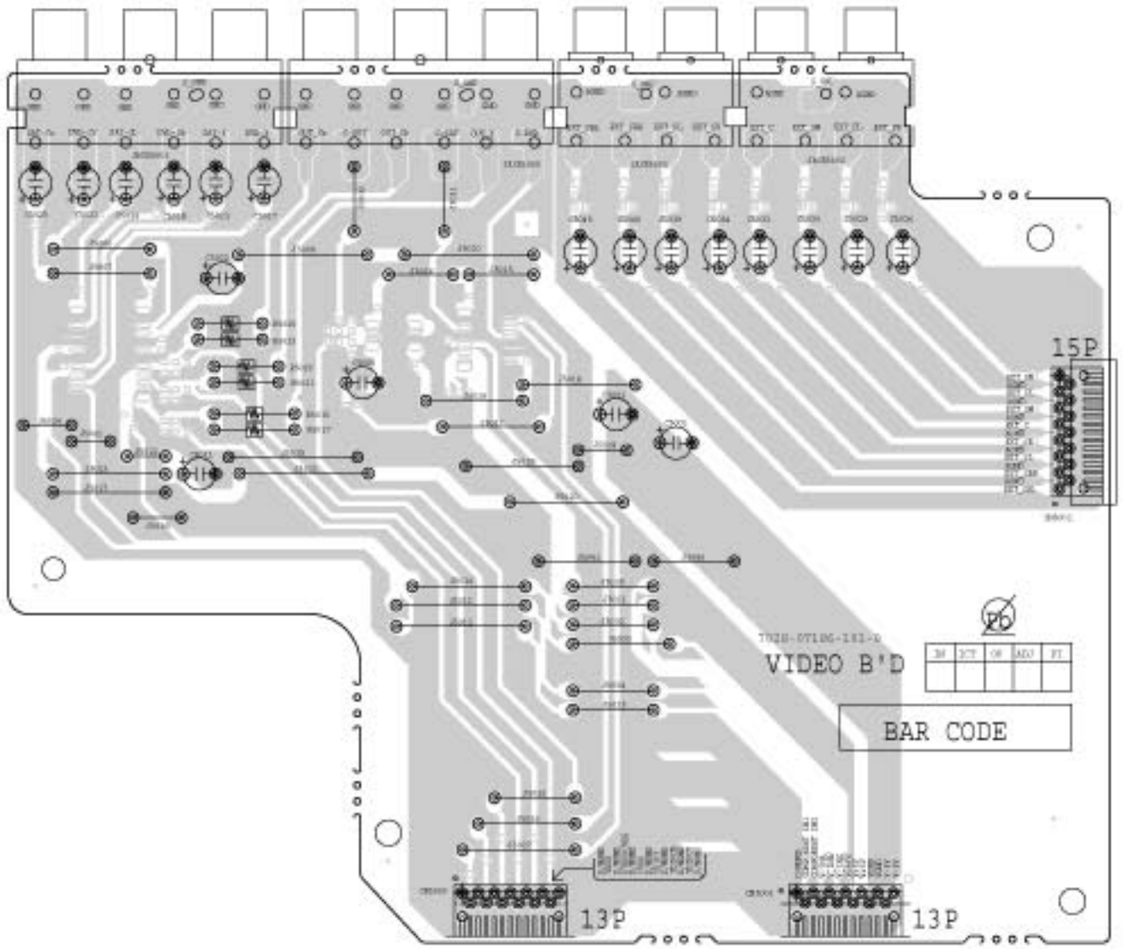

VIDEO
(FOIL SIDE)

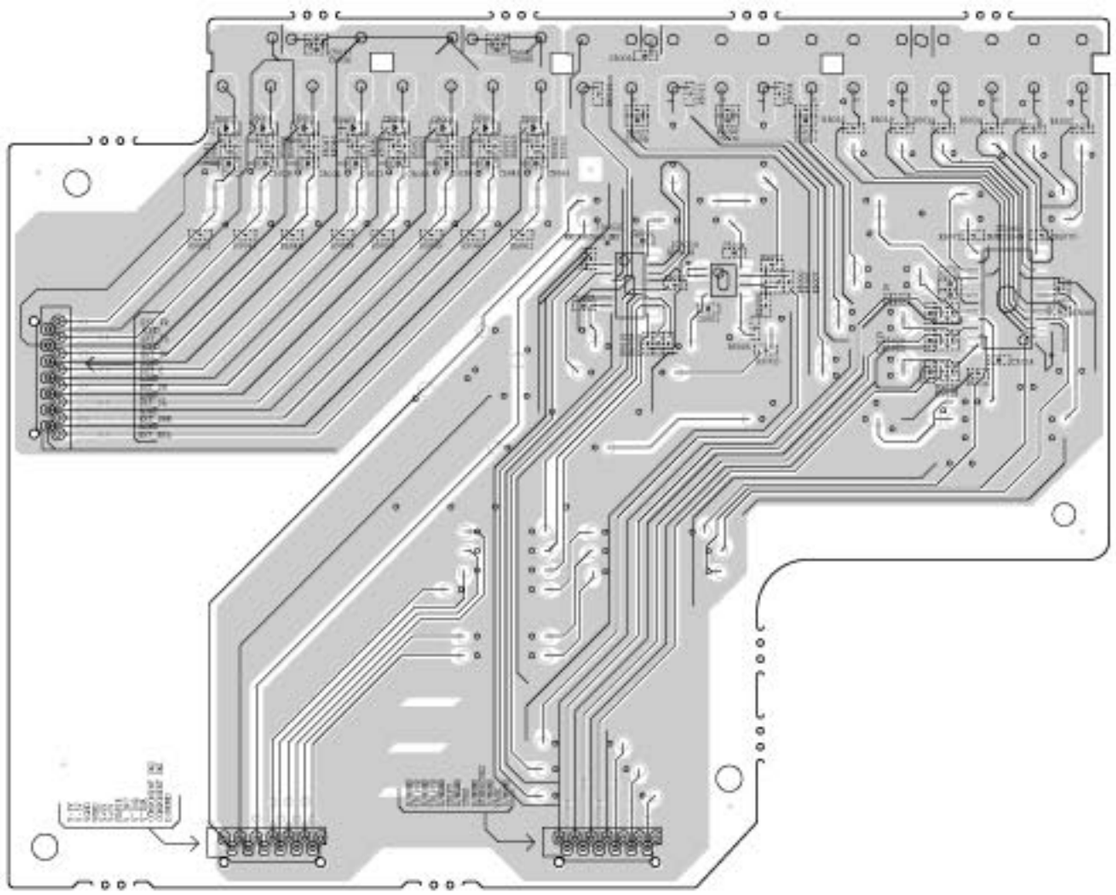

鉛フリー半田
半田付けには、鉛フリー半田 (Sn-Ag-Cu) を使用してください。

Lead-free Solder
When soldering, use the Lead-free Solder (Sn-Ag-Cu).

FRONT CNT
(COMPONENT SIDE)

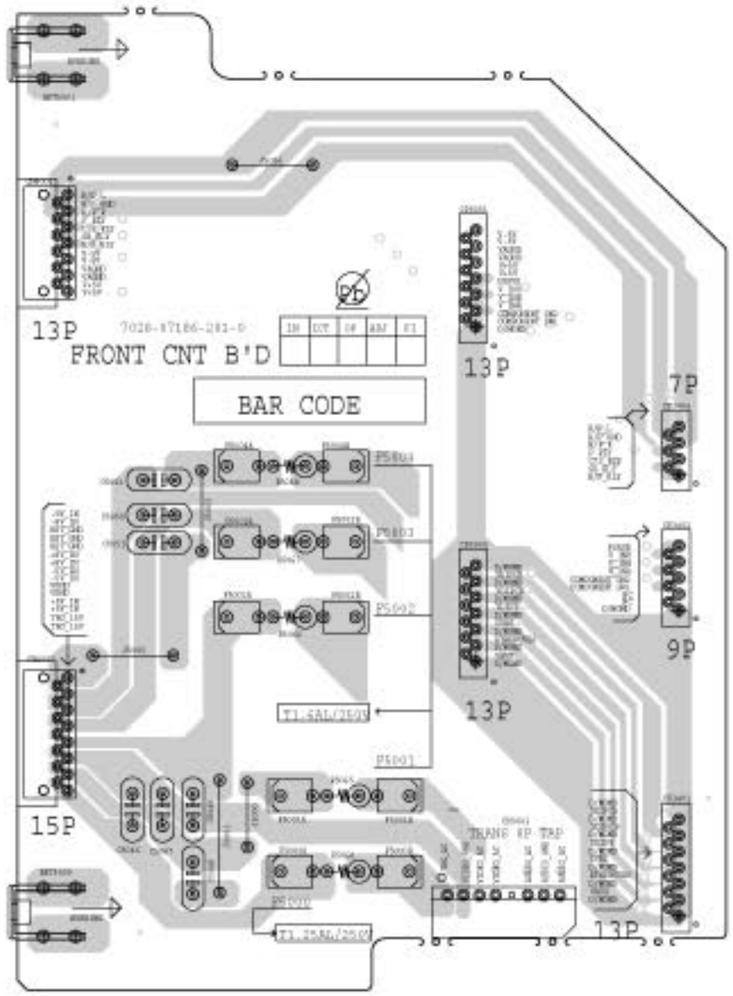

FRONT CNT
(FOIL SIDE)

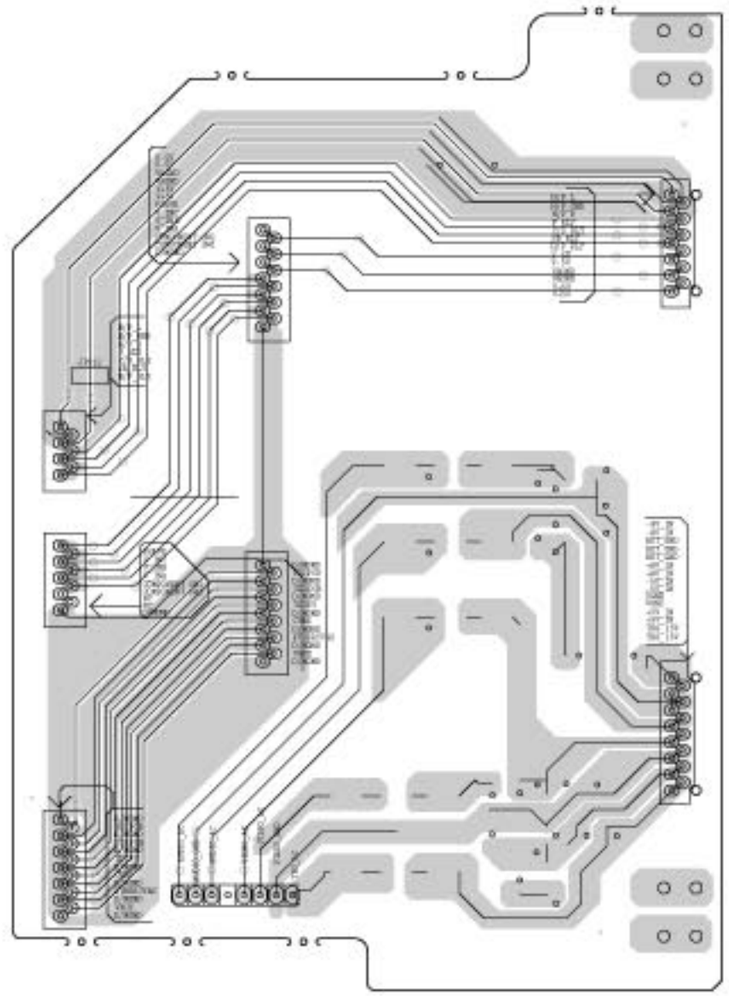

鉛フリー半田
半田付けには、鉛フリー半田 (Sn-Ag-Cu) を使用してください。

Lead-free Solder
When soldering, use the Lead-free Solder (Sn-Ag-Cu).

INPUT
(COMPONENT SIDE)

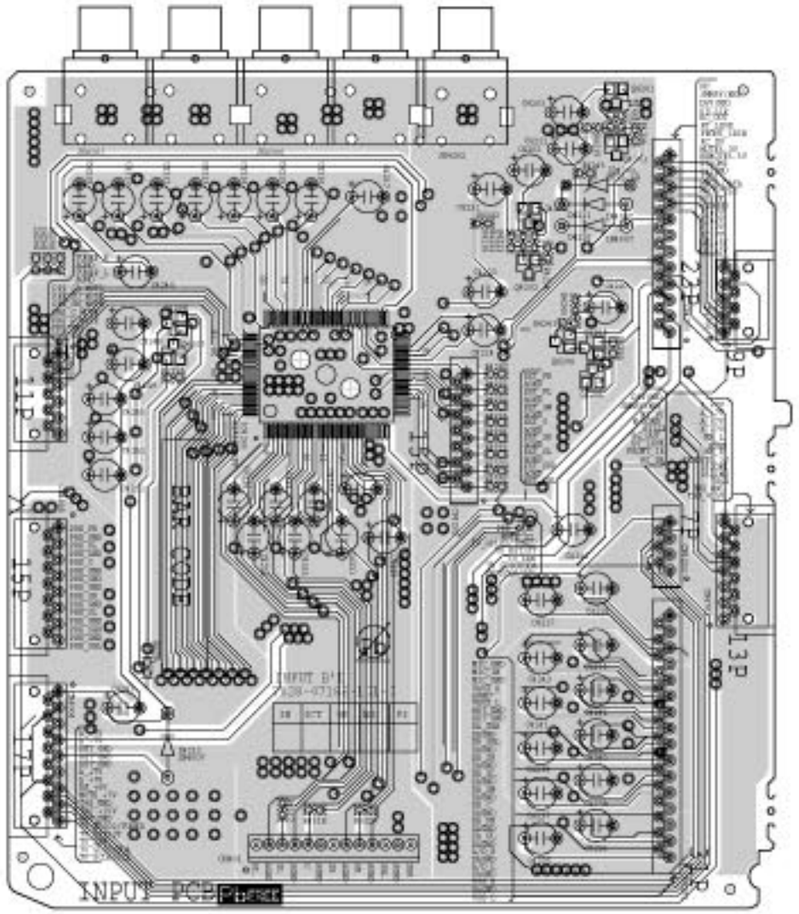

INPUT
(FOIL SIDE)

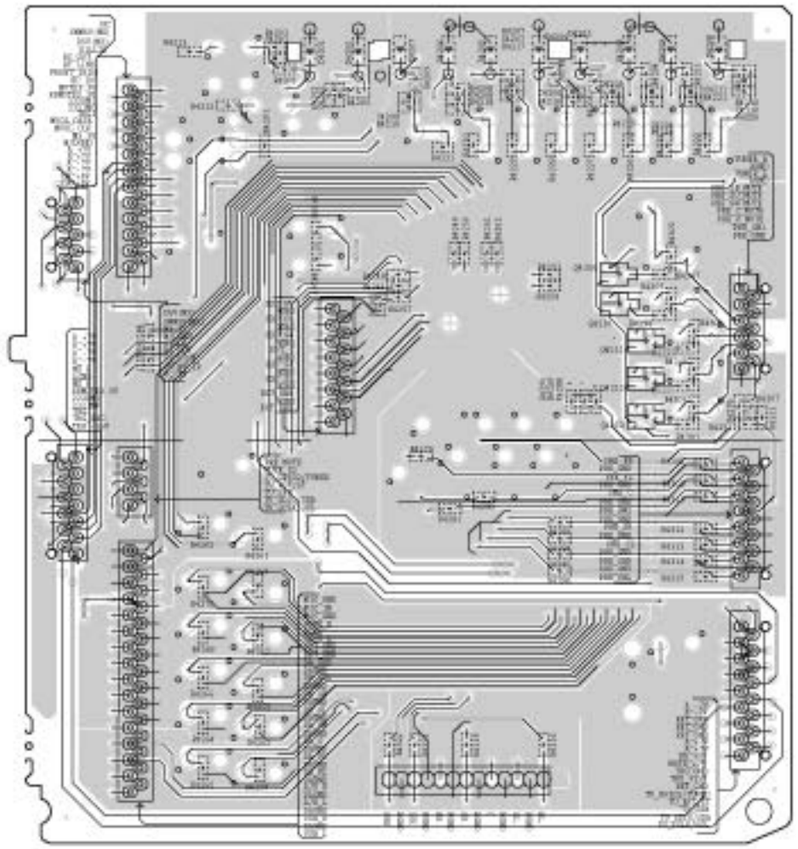

鉛フリー半田
半田付けには、鉛フリー半田 (Sn-Ag-Cu) を使用してください。

Lead-free Solder
When soldering, use the Lead-free Solder (Sn-Ag-Cu).

MAIN
(COMPONENT SIDE)

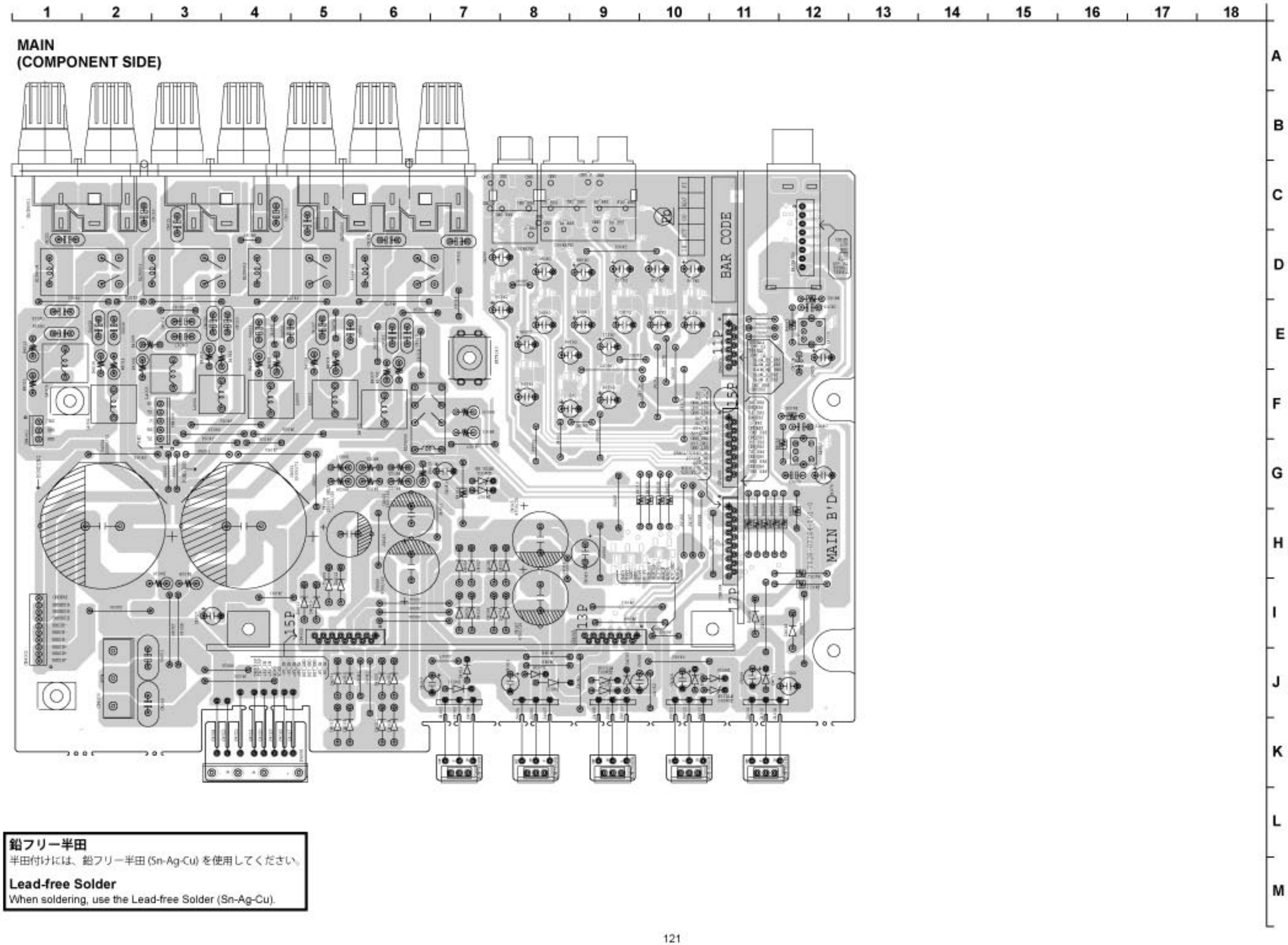

鉛フリー半田
半田付けには、鉛フリー半田 (Sn-Ag-Cu) を使用してください。

Lead-free Solder
When soldering, use the Lead-free Solder (Sn-Ag-Cu).

MAIN
(FOIL SIDE)

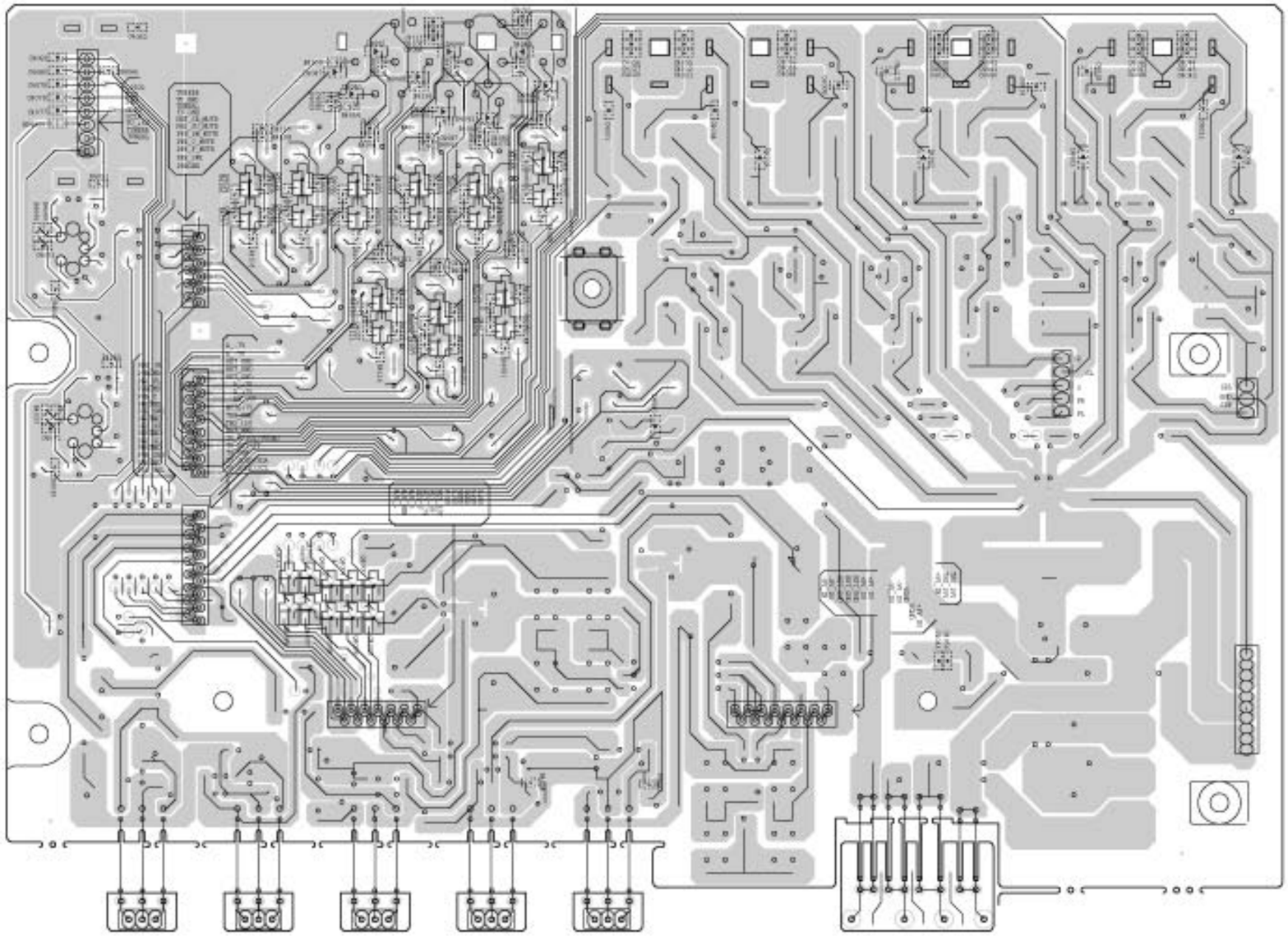

鉛フリー半田
半田付けには、鉛フリー半田 (Sn-Ag-Cu) を使用してください。

Lead-free Solder
When soldering, use the Lead-free Solder (Sn-Ag-Cu).

SMPS
(COMPONENT SIDE)

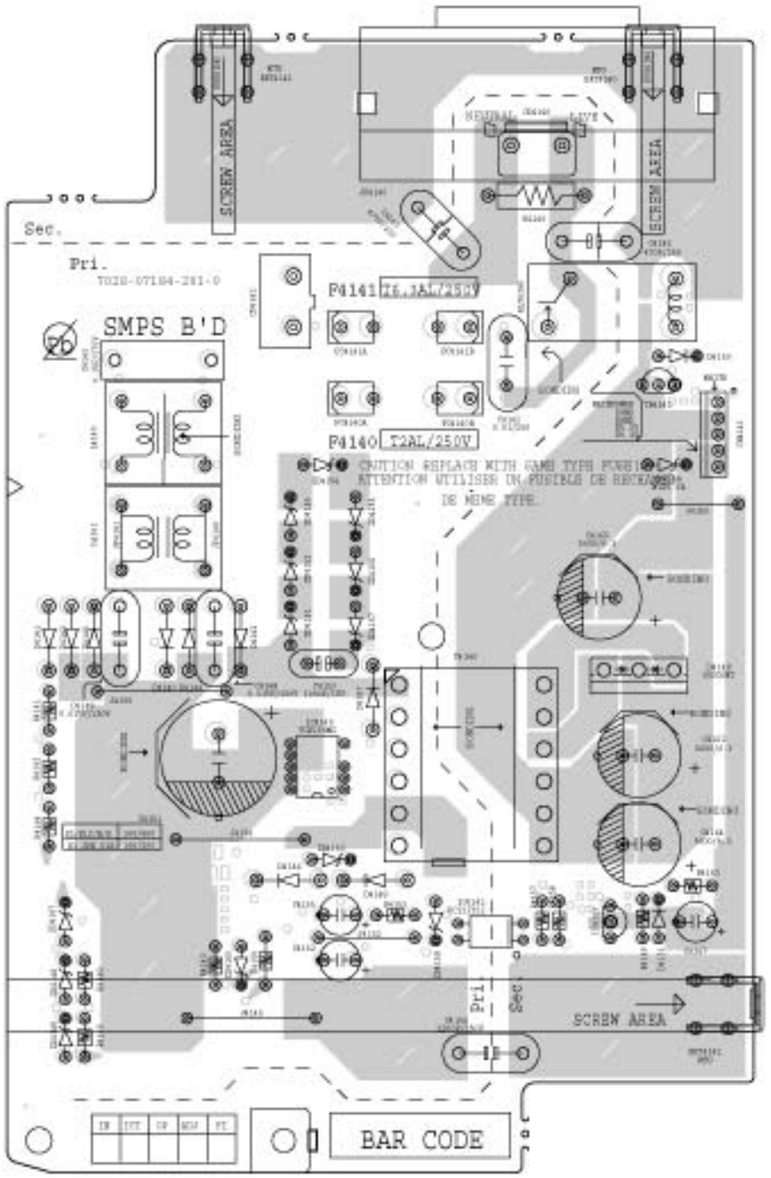

SMPS
(FOIL SIDE)

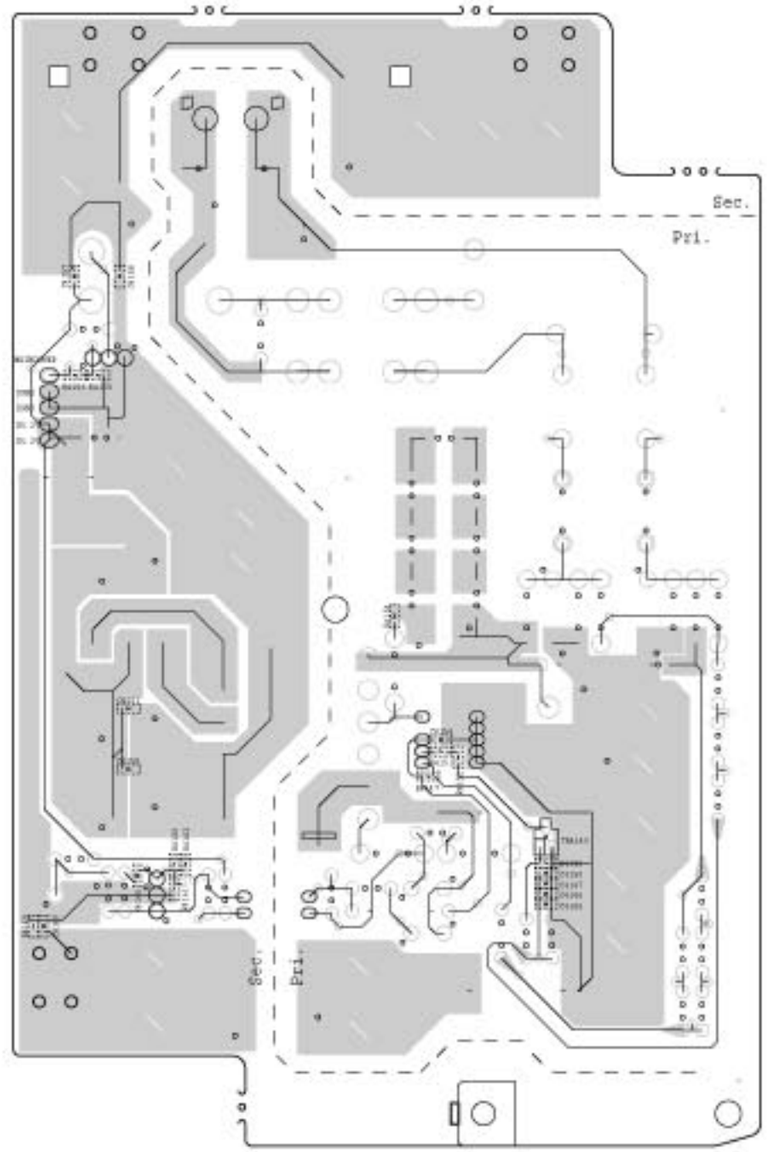

鉛フリー半田
半田付けには、鉛フリー半田 (Sn-Ag-Cu) を使用してください。

Lead-free Solder
When soldering, use the Lead-free Solder (Sn-Ag-Cu).

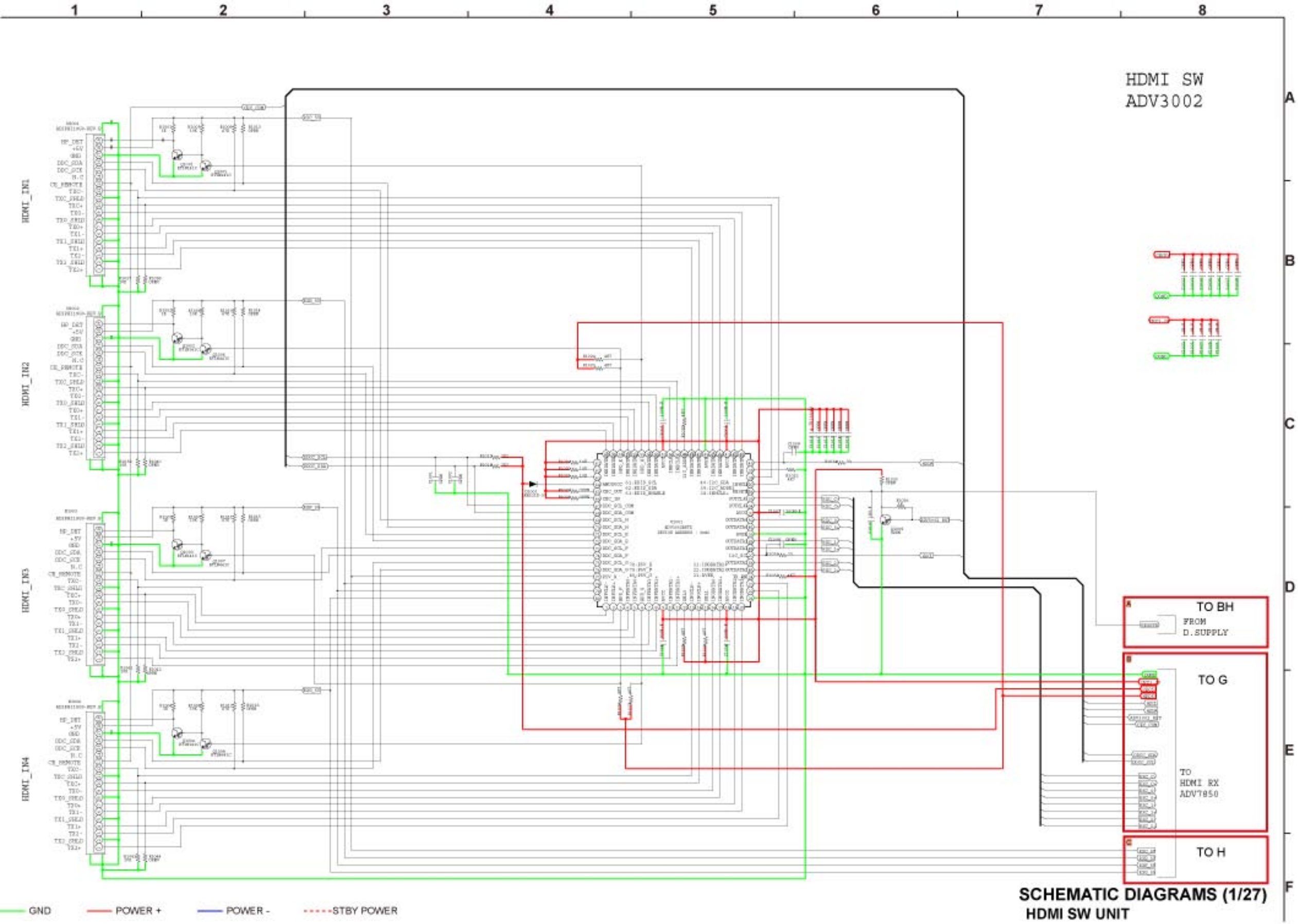

SCHEMATIC DIAGRAMS (1/27)
HDMI SW UNIT

FRONT HDMI

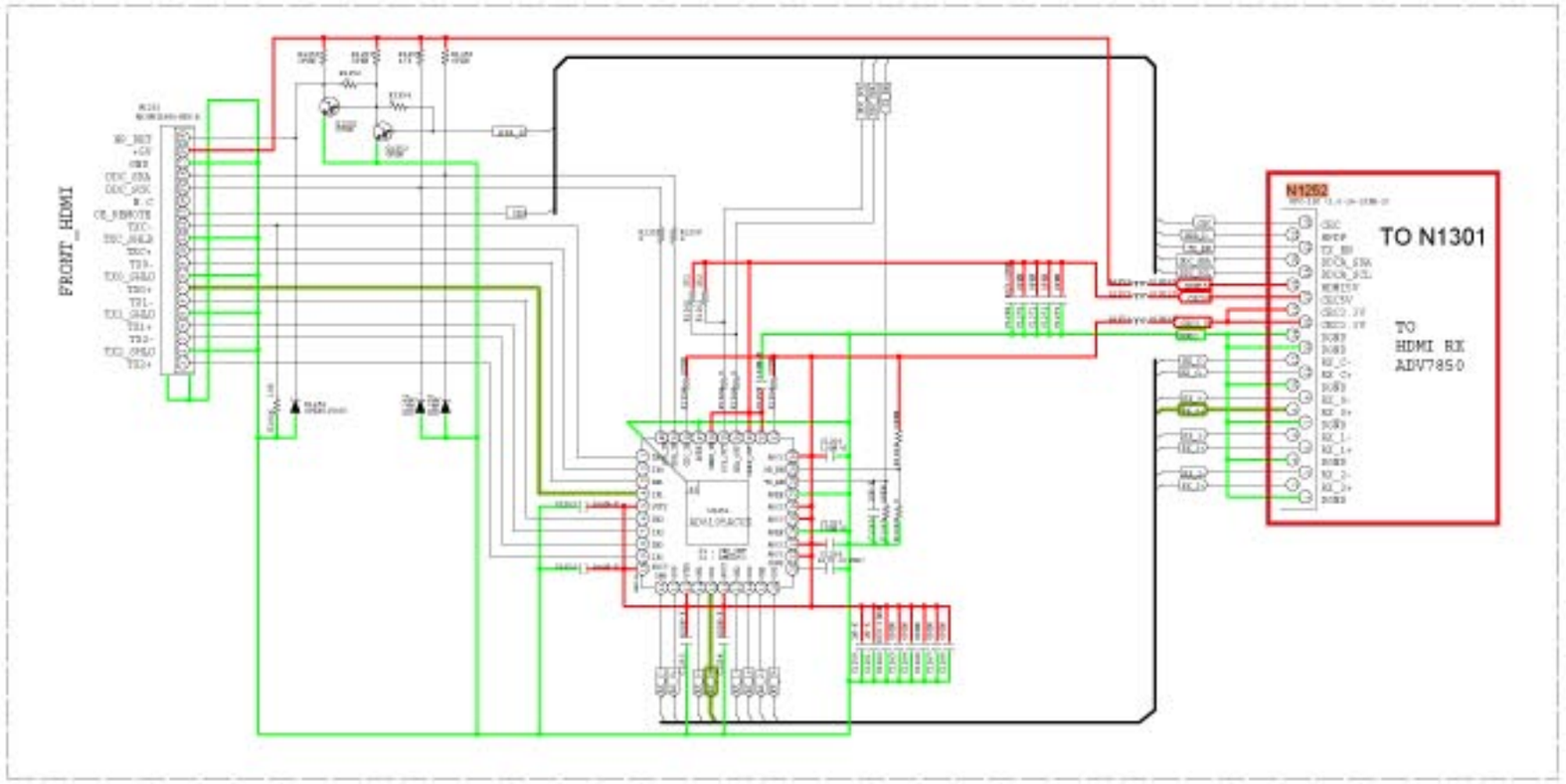

GND POWER + POWER - STBY POWER HDMI/TMDS SIGNAL LINE

SCHEMATIC DIAGRAMS (2/27)
FRONT HDMI UNIT

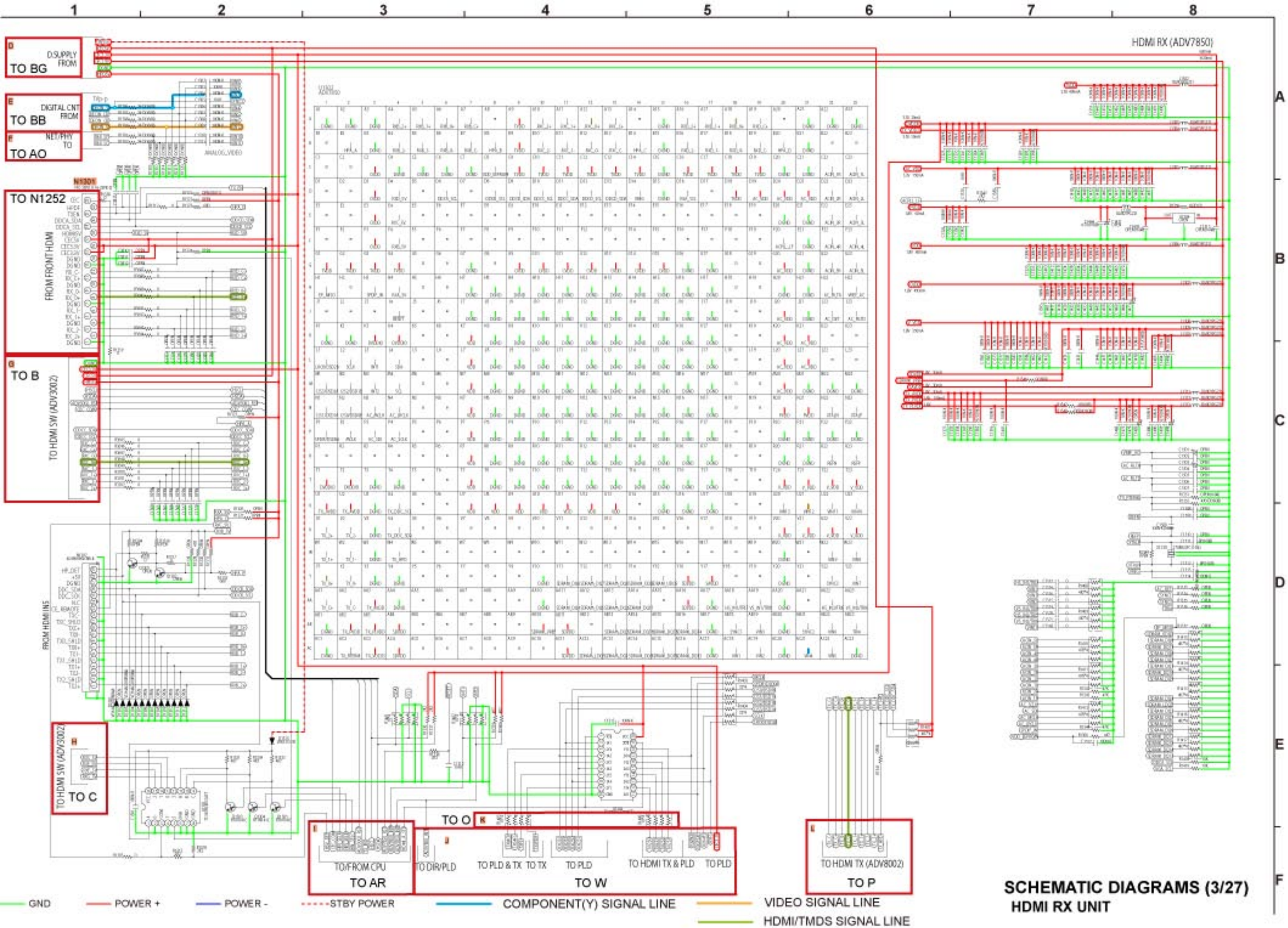

SCHEMATIC DIAGRAMS (3/27)
HDMI RX UNIT

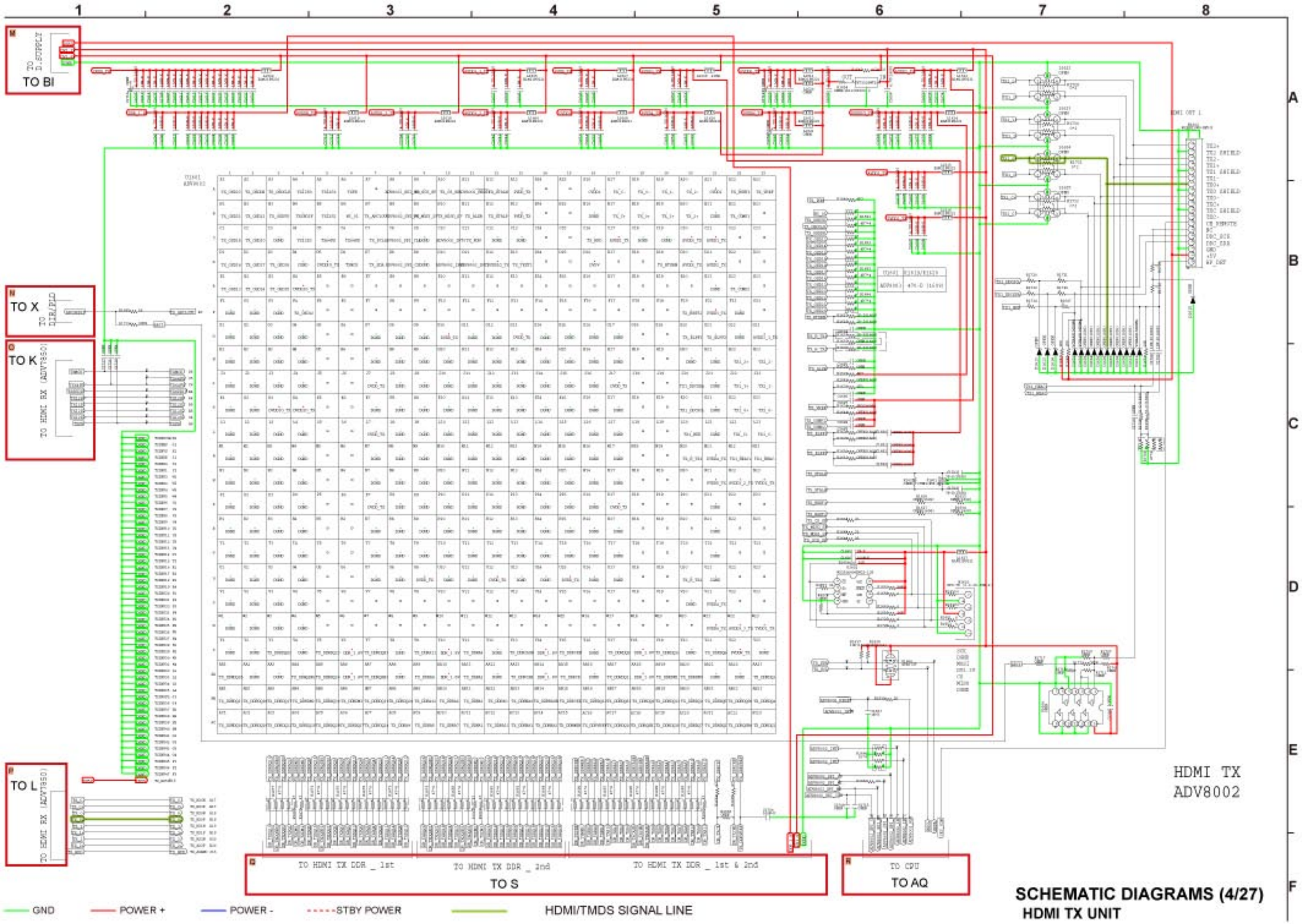

SCHEMATIC DIAGRAMS (4/27)
HDMI TX UNIT

HDMI TX DDR

GND POWER + POWER - STBY POWER

SCHEMATIC DIAGRAMS (5/27)
HDMI TX DDR UNIT

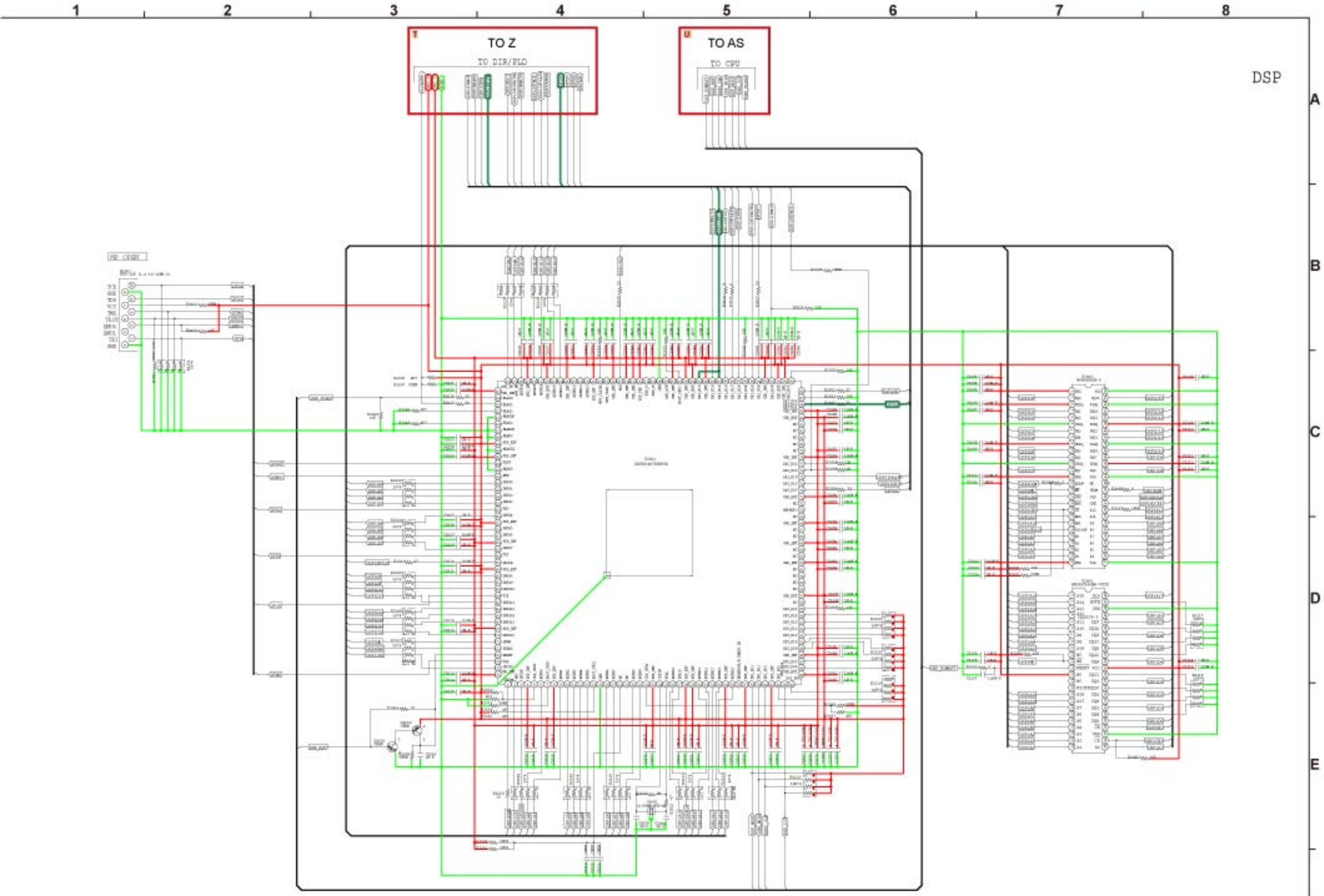

GND POWER + POWER - STBY POWER DIGITAL AUDIO SIGNAL LINE

SCHEMATIC DIAGRAMS (6/27)
DSP UNIT

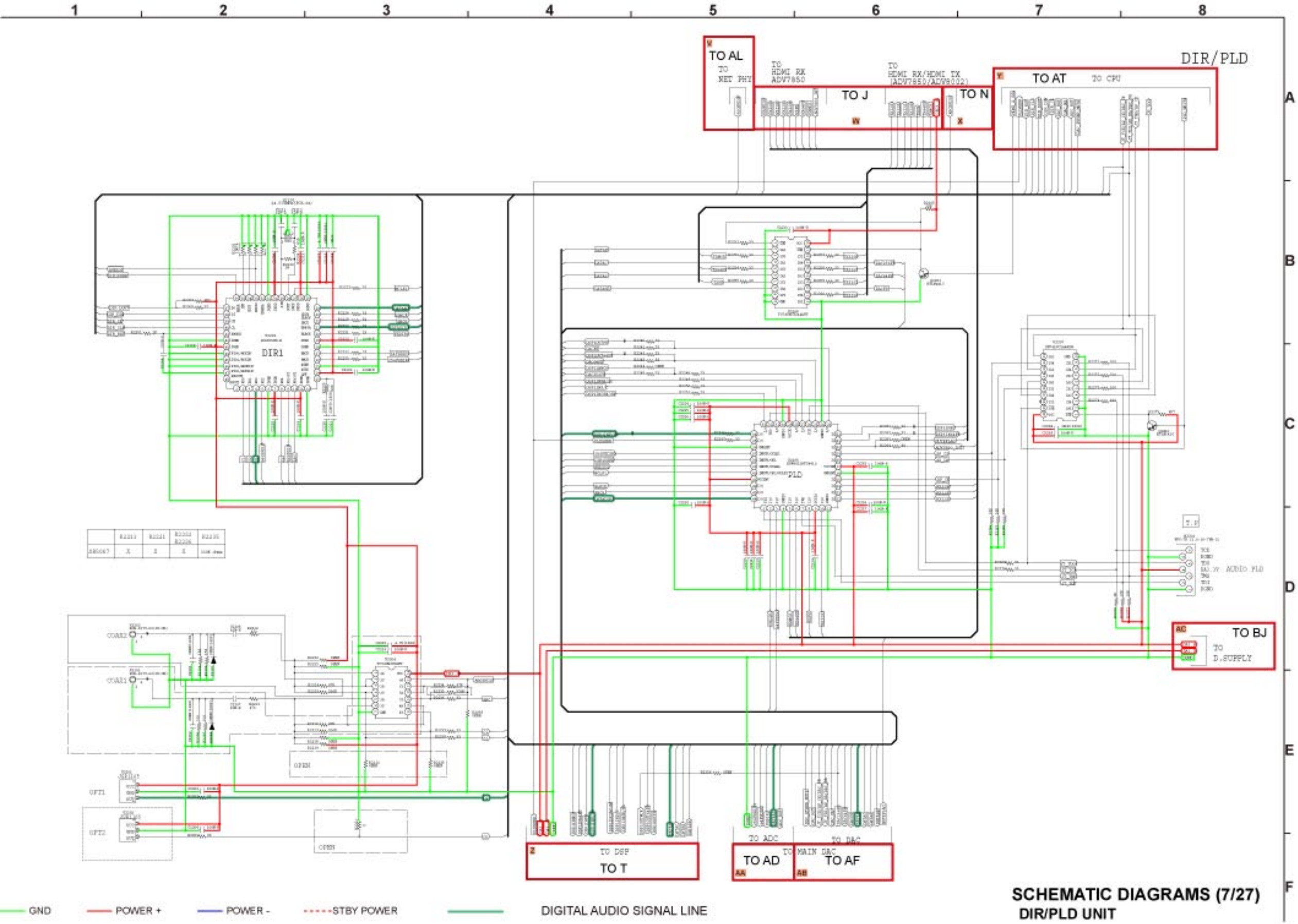

SCHEMATIC DIAGRAMS (7/27)
DIR/PLD UNIT

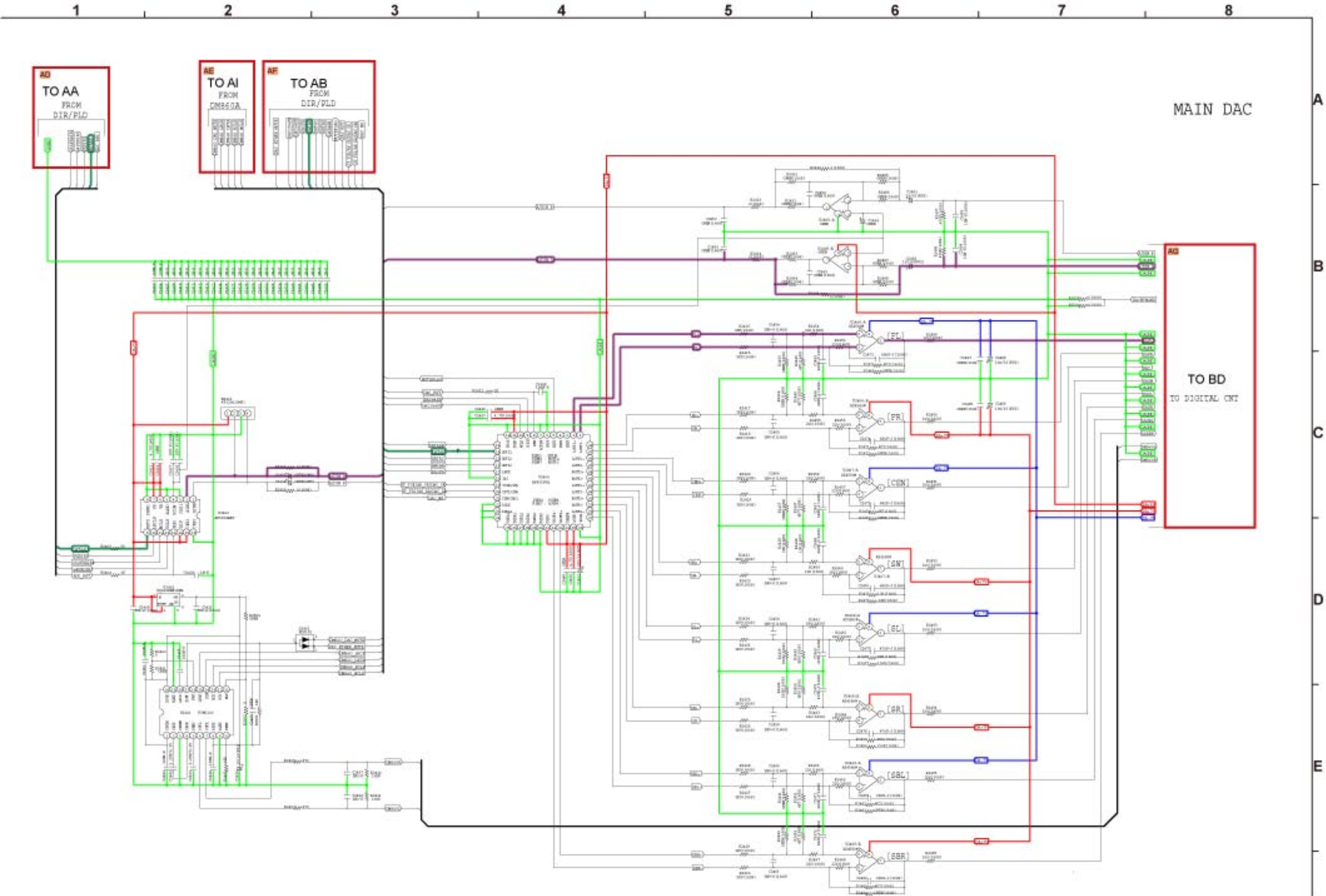

GND — POWER + — POWER - — STBY POWER — ANALOG AUDIO SIGNAL LINE — DIGITAL AUDIO SIGNAL LINE

SCHEMATIC DIAGRAMS (8/27)
MAIN DAC UNIT

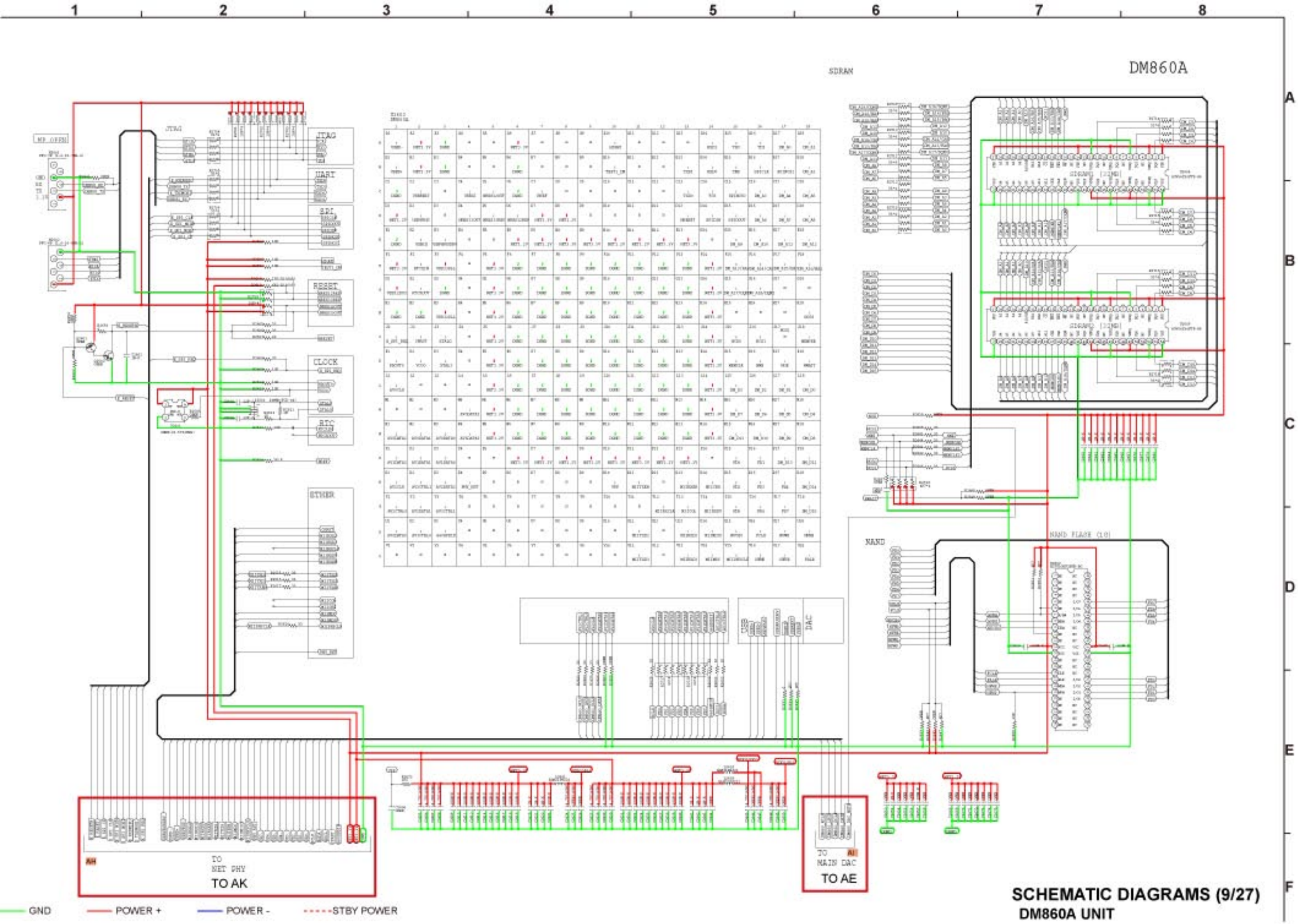

SCHEMATIC DIAGRAMS (9/27)
DM860A UNIT

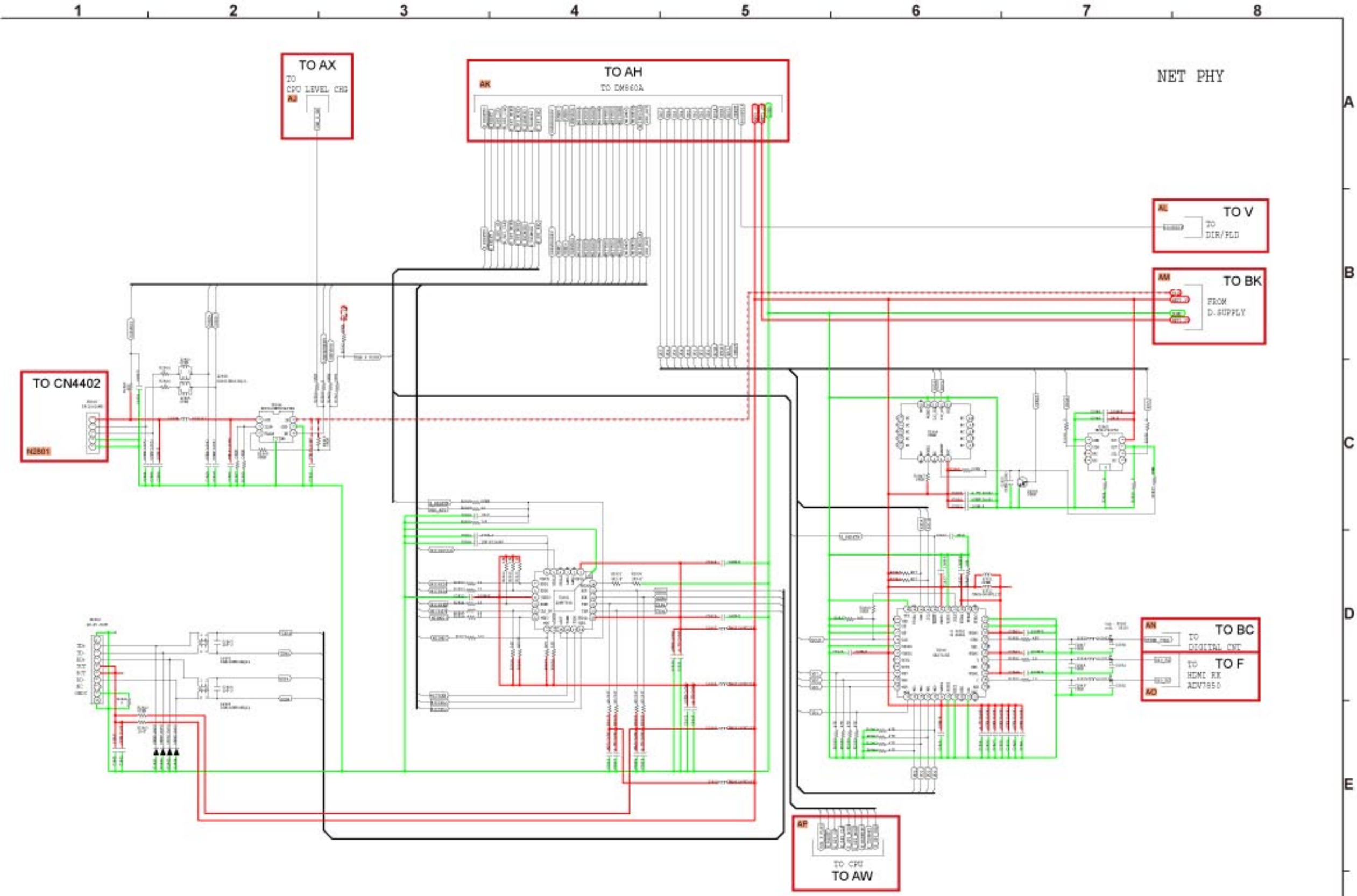

GND POWER + POWER - STBY POWER

SCHEMATIC DIAGRAMS (10/27)
NET PHY UNIT

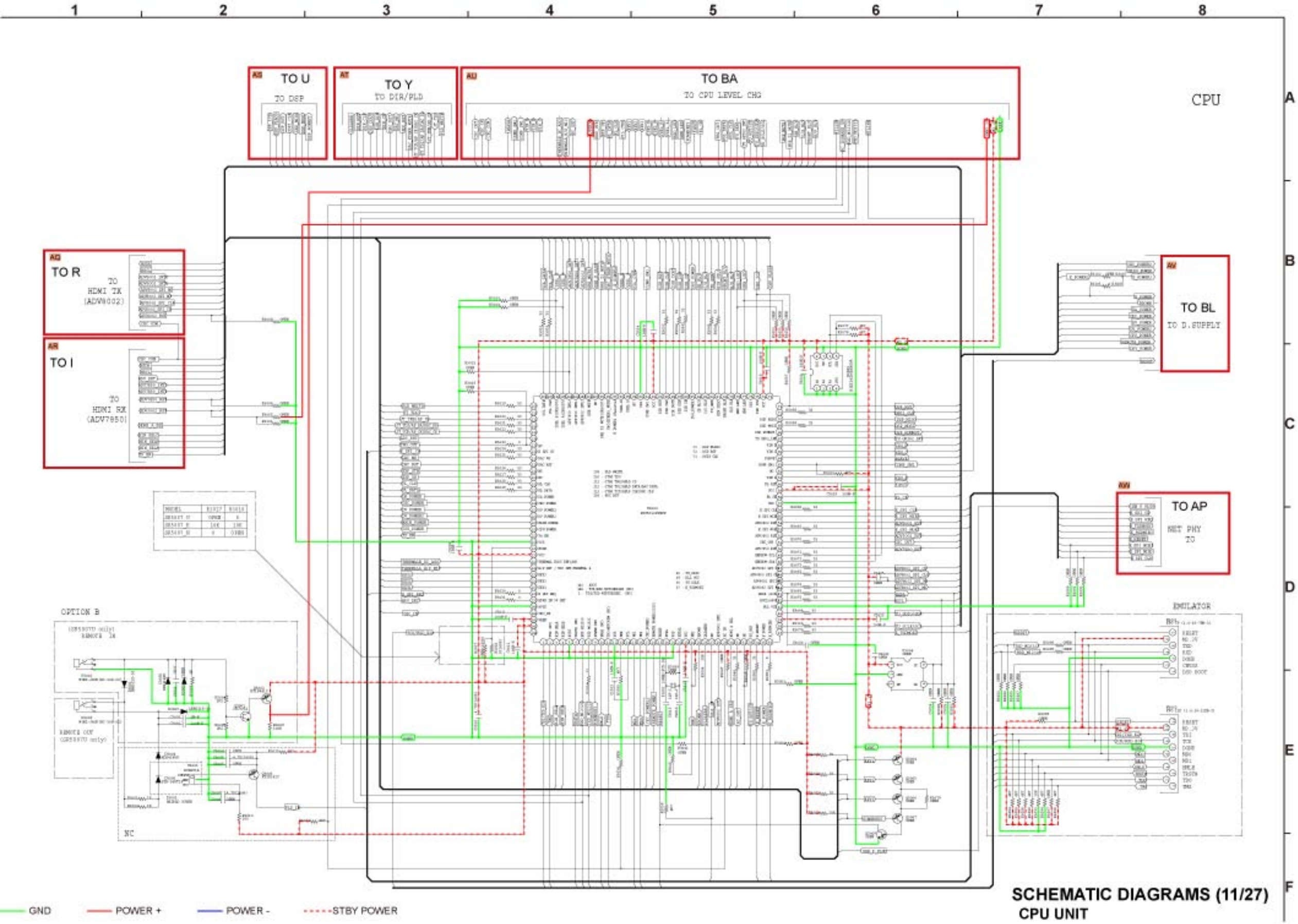

SCHEMATIC DIAGRAMS (11/27)
CPU UNIT

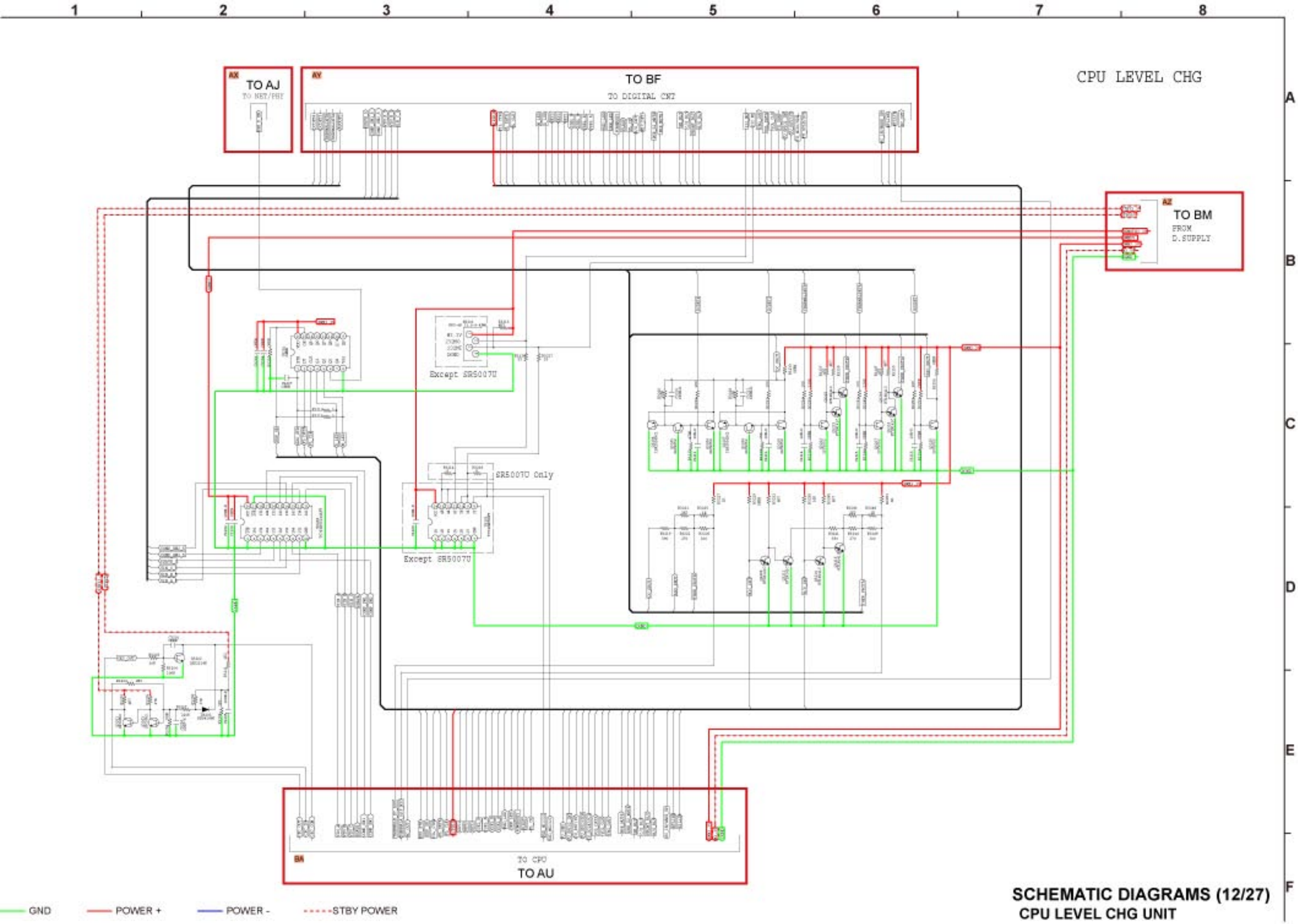

SCHEMATIC DIAGRAMS (12/27)
CPU LEVEL CHG UNIT

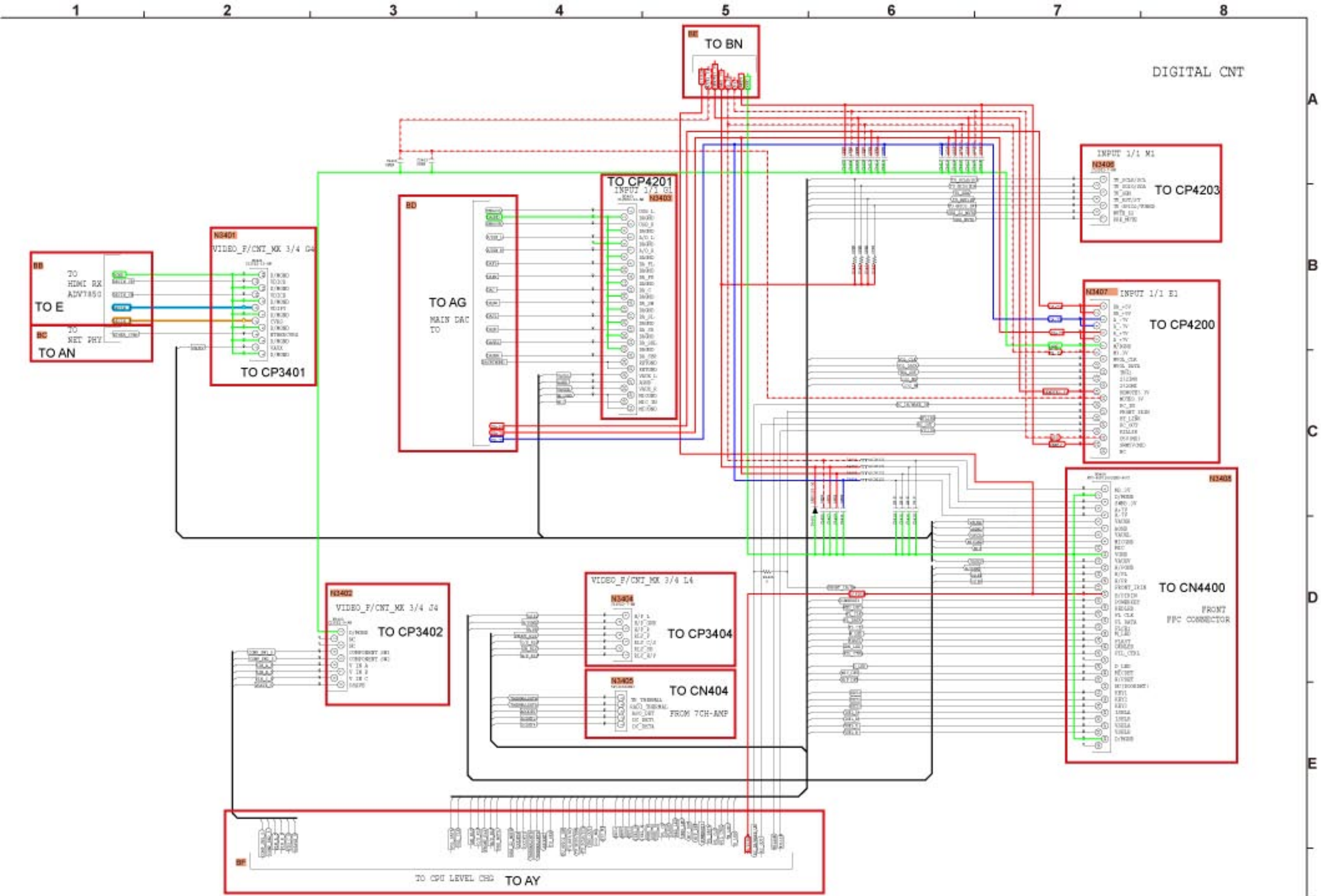

GND — POWER + — POWER - — STBY POWER — COMPONENT(Y) SIGNAL LINE — VIDEO SIGNAL LINE

SCHEMATIC DIAGRAMS (13/27)
DIGITAL CNT UNIT

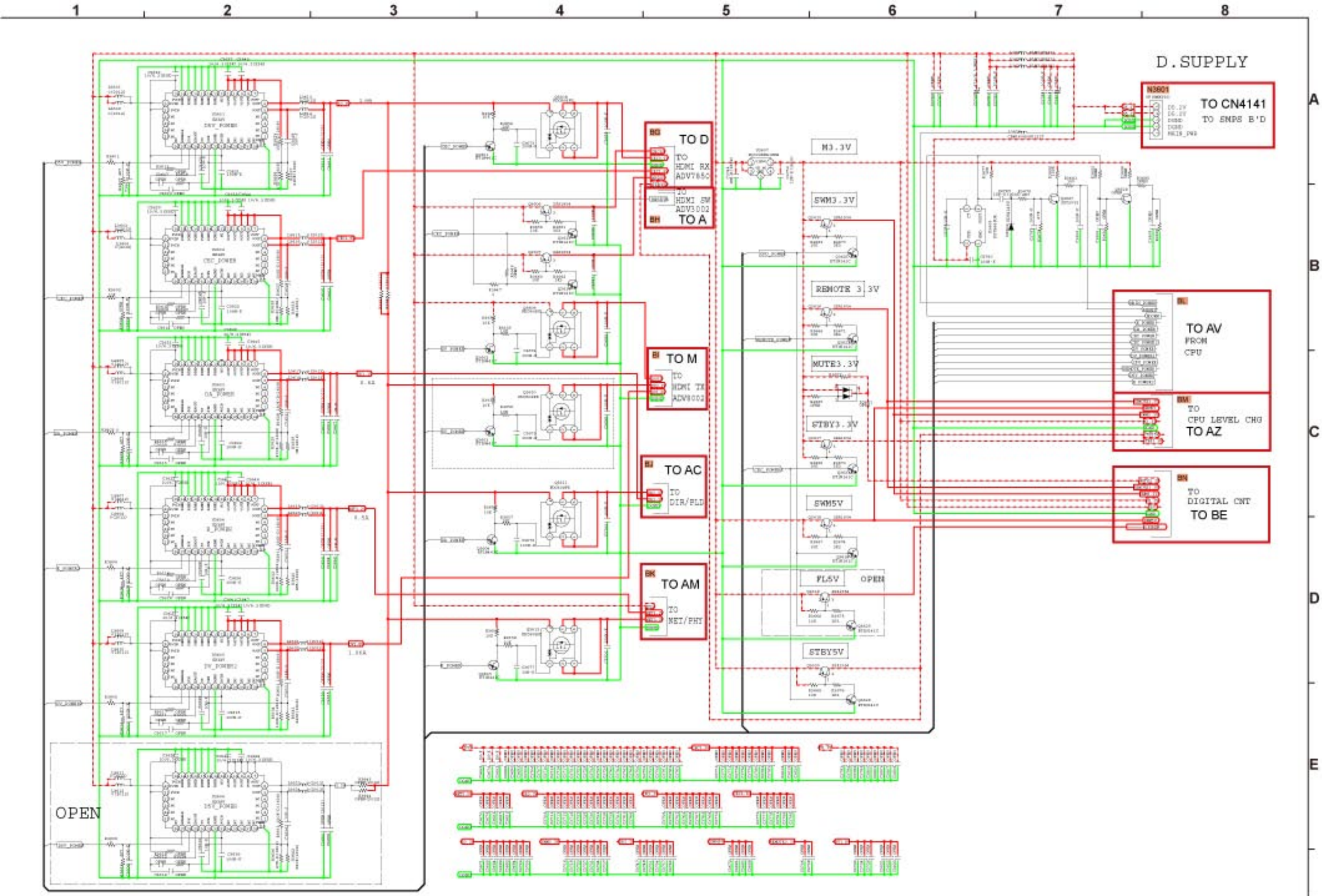

GND POWER + POWER - STBY POWER

SCHEMATIC DIAGRAMS (14/27)
D.SUPPLY UNIT

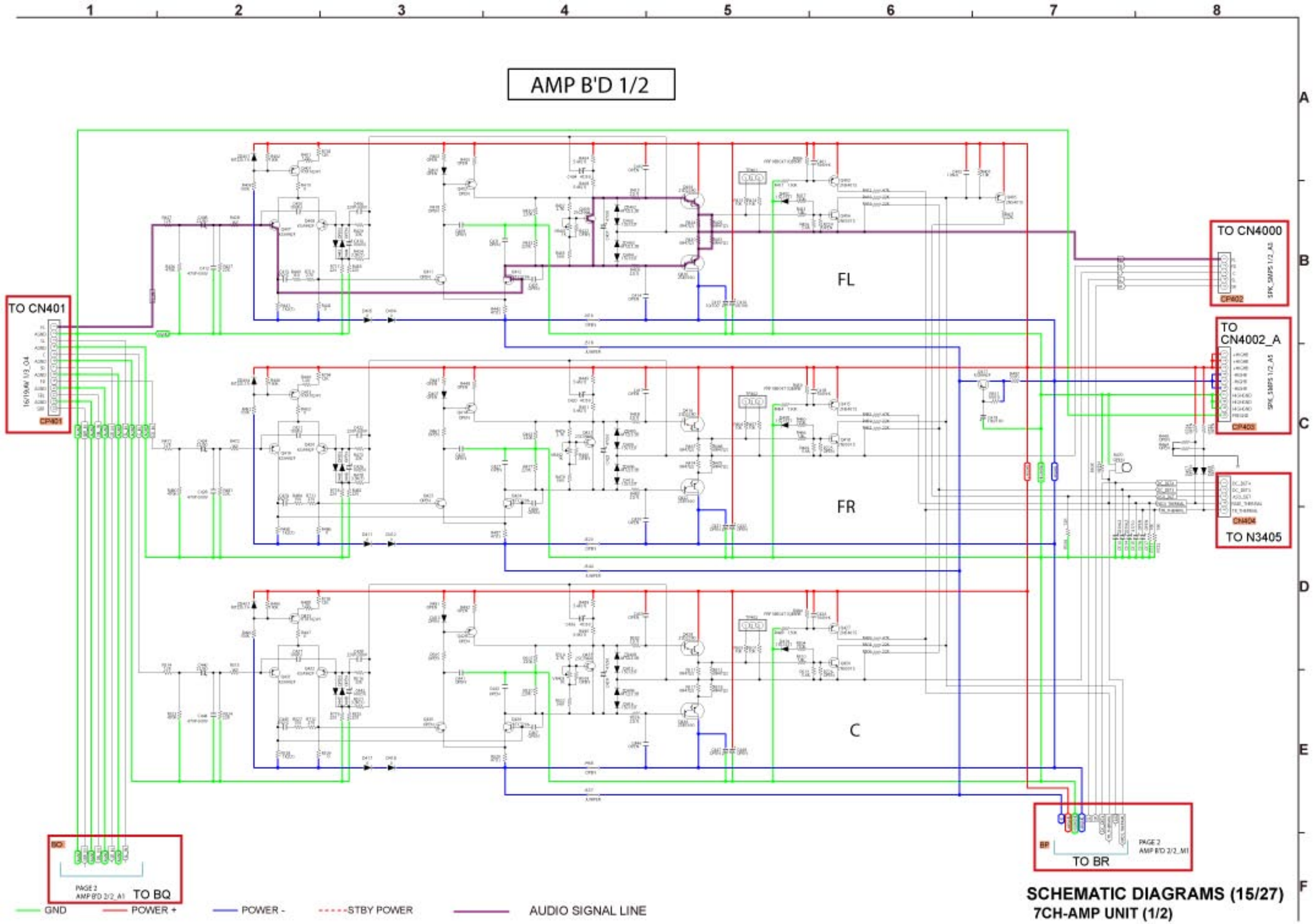

SCHEMATIC DIAGRAMS (15/27)
7CH-AMP UNIT (1/2)

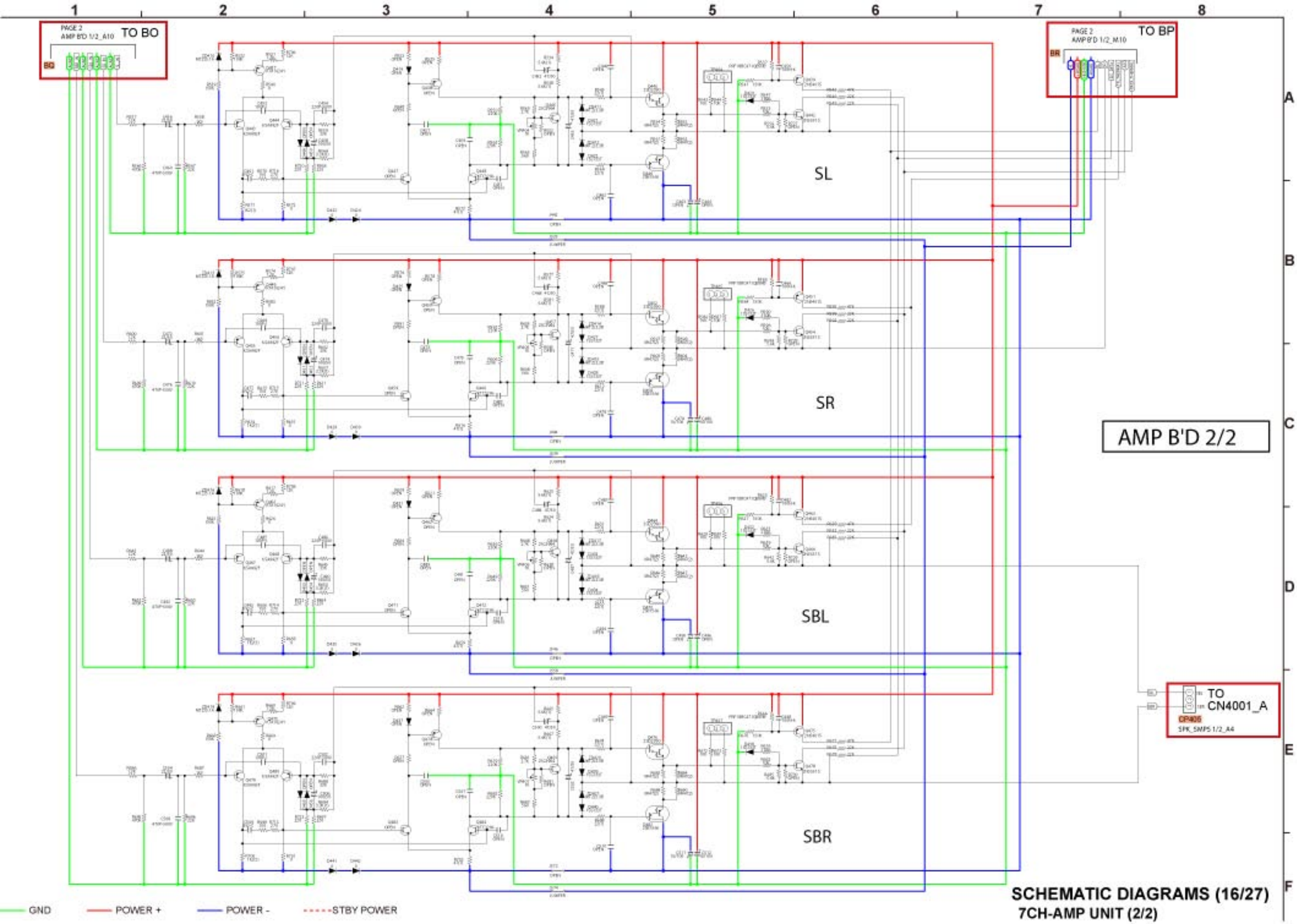

SCHEMATIC DIAGRAMS (16/27)
7CH-AMP UNIT (2/2)

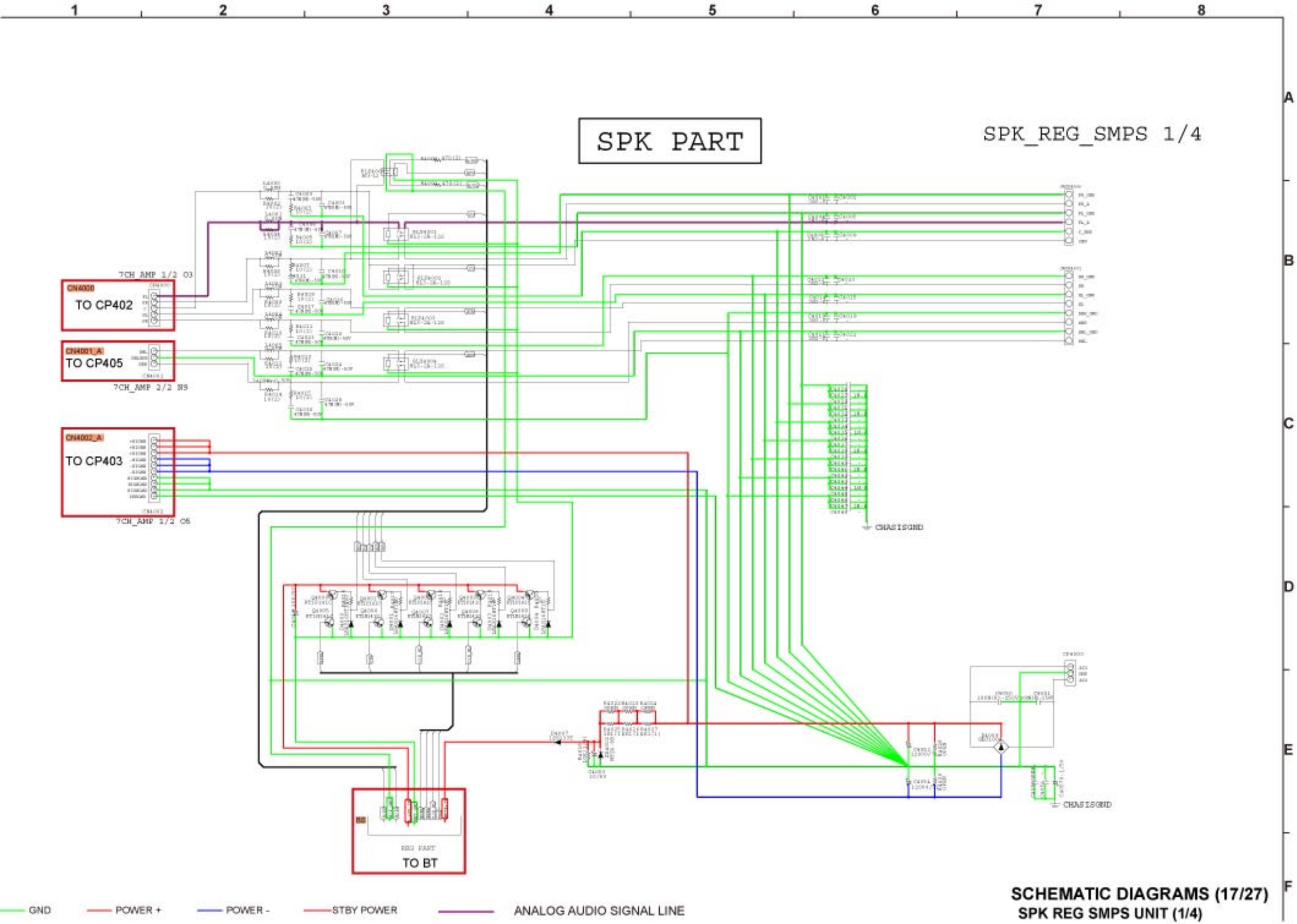

SCHEMATIC DIAGRAMS (17/27)
SPK REG SMPS UNIT (1/4)

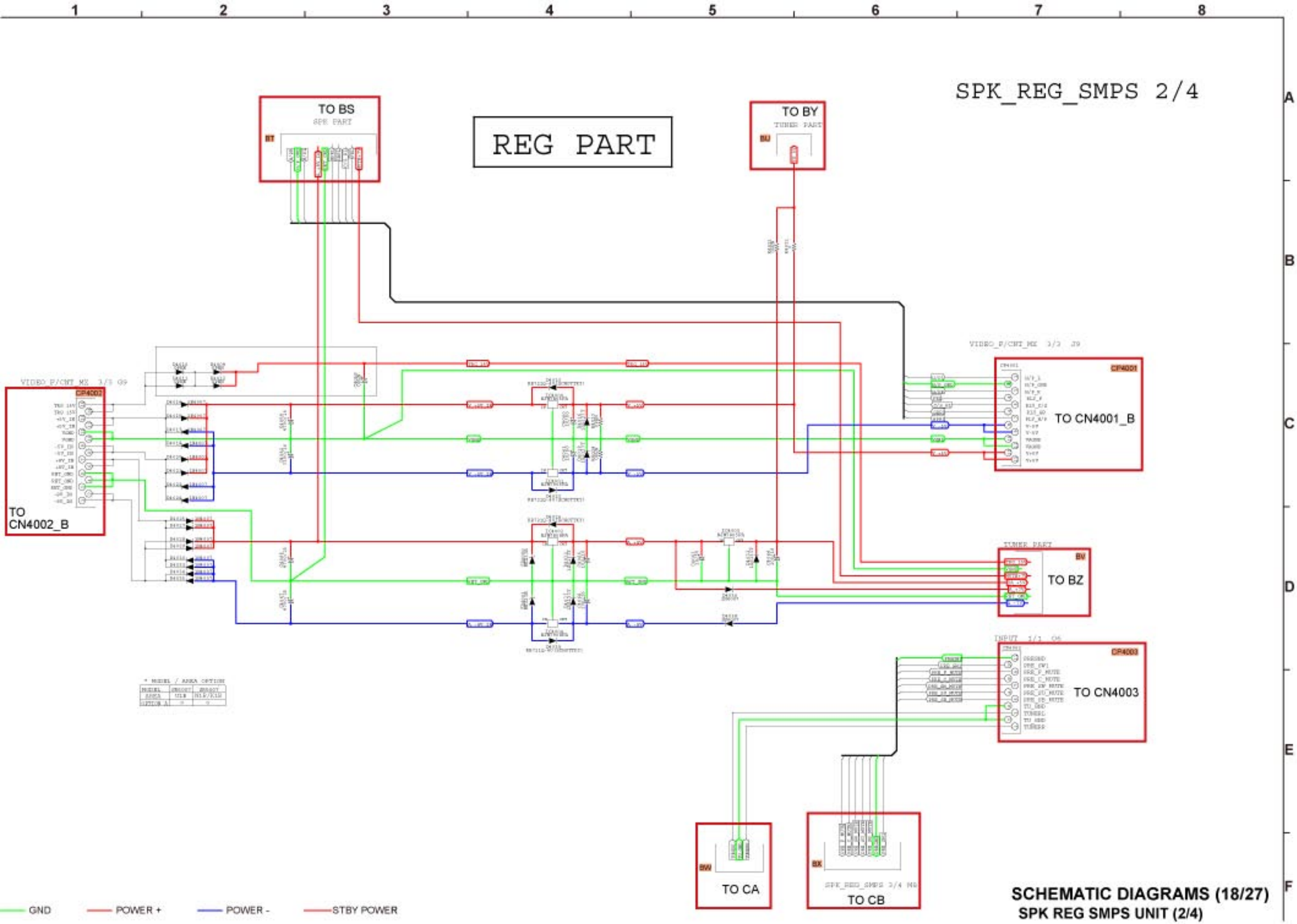

SCHEMATIC DIAGRAMS (18/27)
SPK REG SMPS UNIT (2/4)

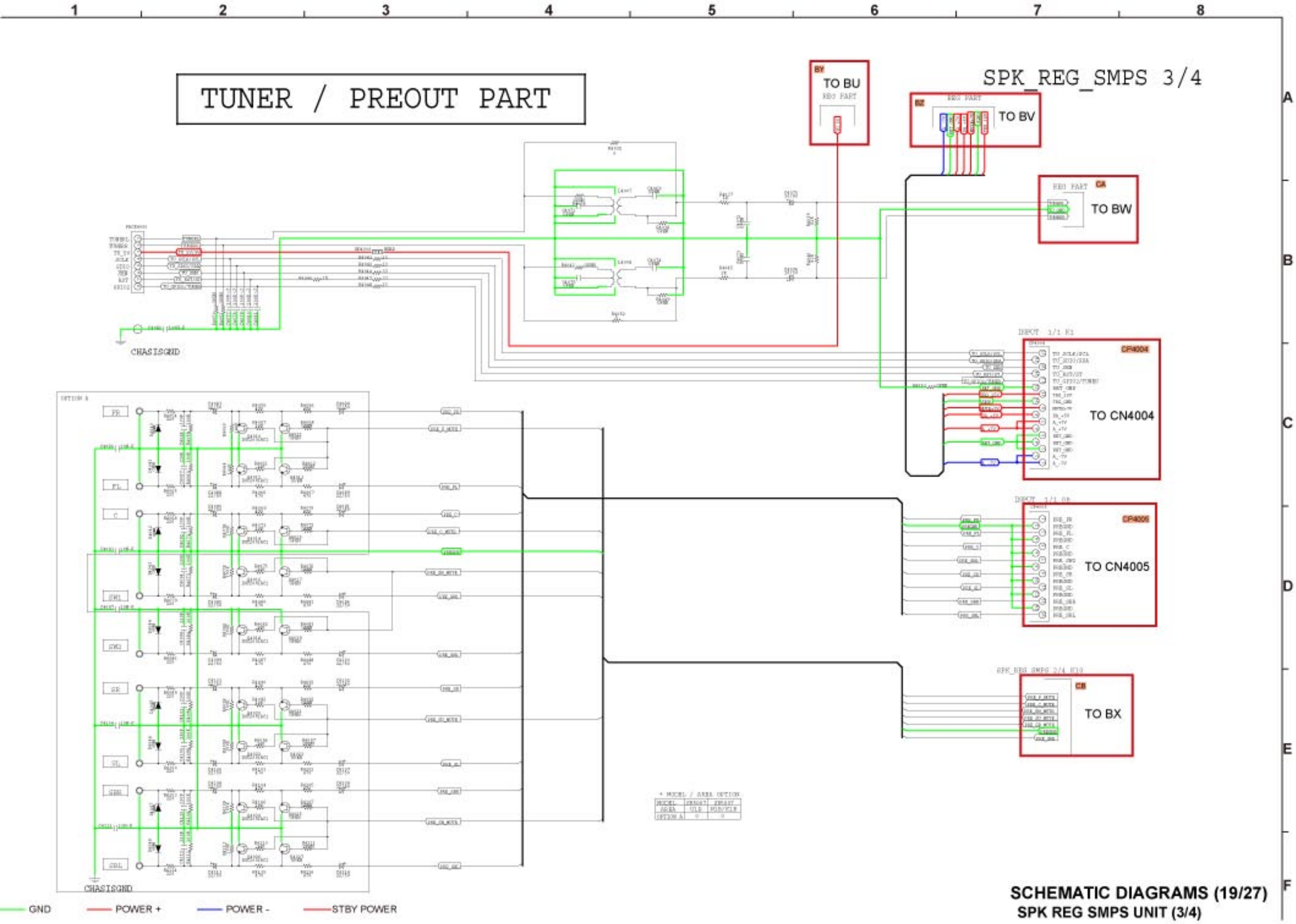

SCHEMATIC DIAGRAMS (19/27)
SPK REG SMPS UNIT (3/4)

SPK_REG_SMPS 4/4

SMPS B'D

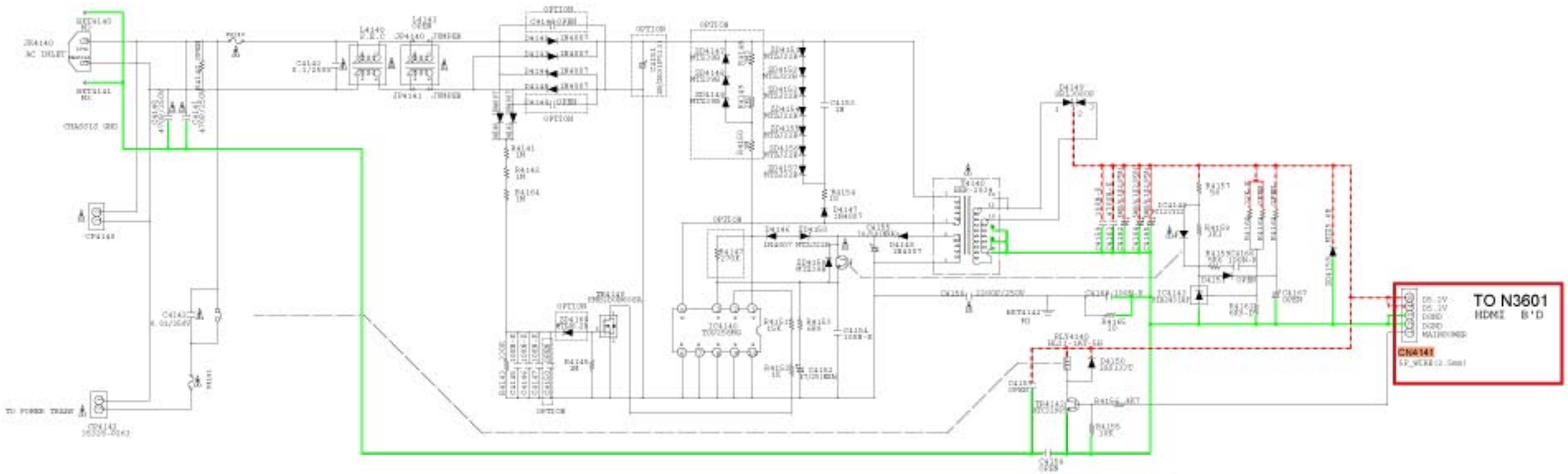

*FUSE OPTION

	R3		R10, R2	
	F4140	F4142	F4140	F4141
BR6007	2A	0.5A	1.6A	0.5A

*OPTION TABLE

	D4149	D4147	D4148	D4149	D4149	D4149	D4150	D4151	D4152	D4153	D4154	D4155
U	MTZ6.8B	MTZ12B	MTZ12B	MTZ12B	1N 1[illegible]	1N 1[illegible]	1[illegible]	1[illegible]	0.8B	0.8B	1000/	100/20
U.E	MTZ12B	0.8B	0.8B	0.8B	0.8B	0.8B	0.8B	1[illegible]	0.8	0.8	1000-8	100/400

⚠ INDICATES SAFETY CRITICAL COMPONENTS.
TO REDUCE THE RISK OF ELECTIC SHOCK, LEAKAGE CURRENT OR RESISTANCE MEASUREMENTS SHALL BE CARRIED OUT (EXPOSED PARTS ARE ACCEPTABLY INSULATED FROM THE SUPPLY CIRCUIT) BEFORE THE APPLIANCE RETURNED TO THE CUSTOMER.

GND — POWER + — POWER - — STBY POWER

SCHEMATIC DIAGRAMS (20/27)
SPK REG SMPS UNIT (4/4)

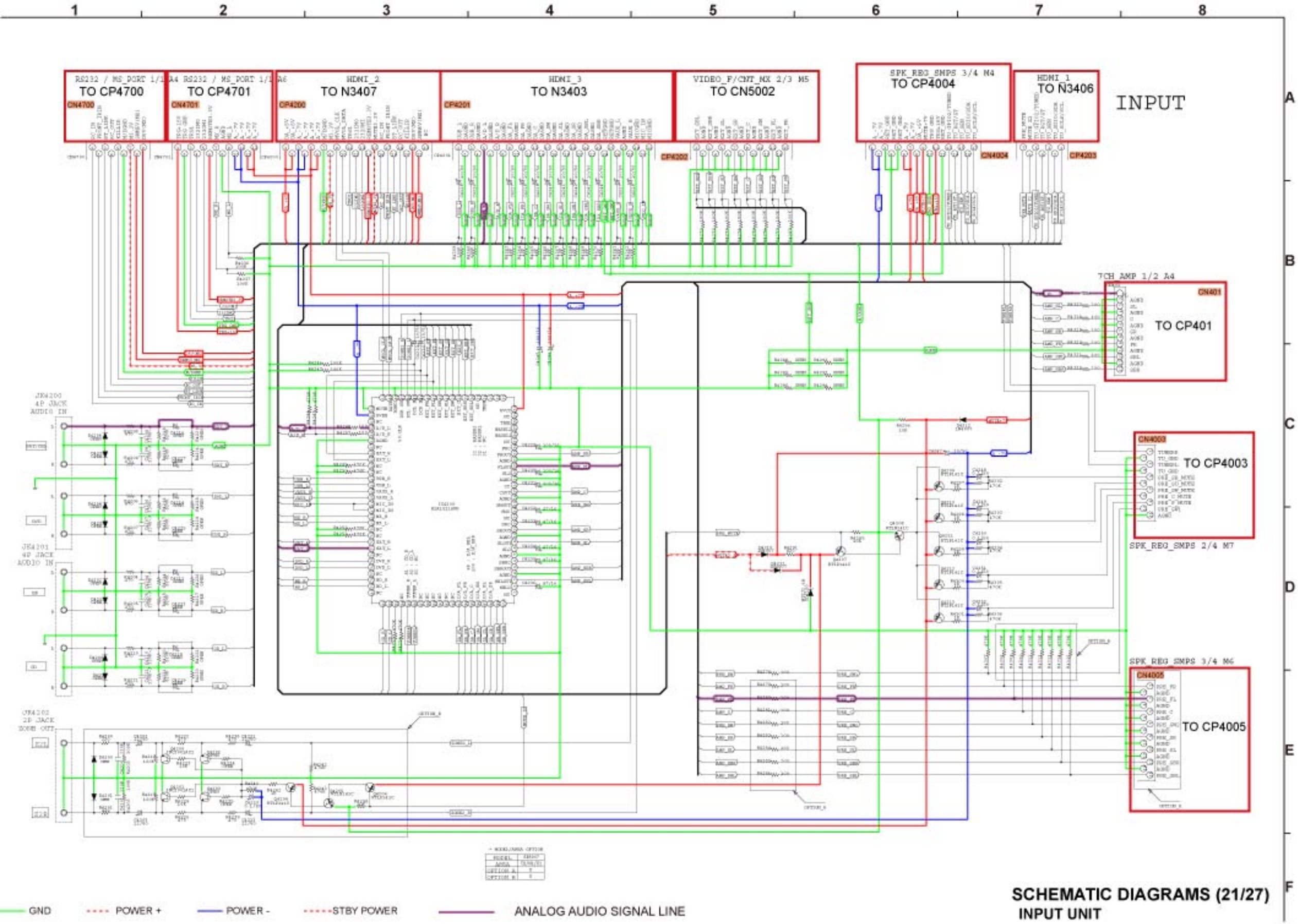

SCHEMATIC DIAGRAMS (21/27)
INPUT UNIT

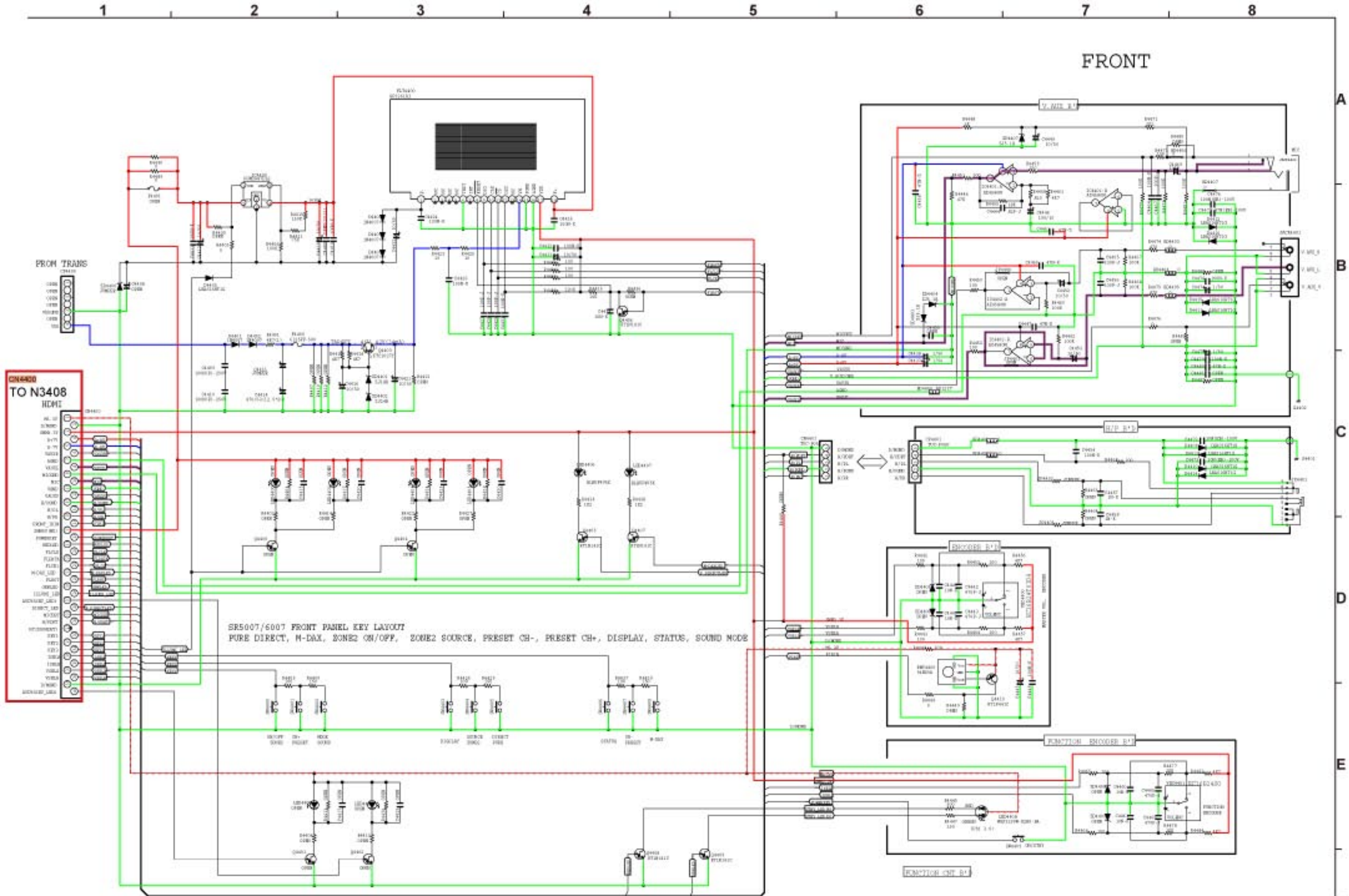

SCHEMATIC DIAGRAMS (22/27)
FRONT UNIT

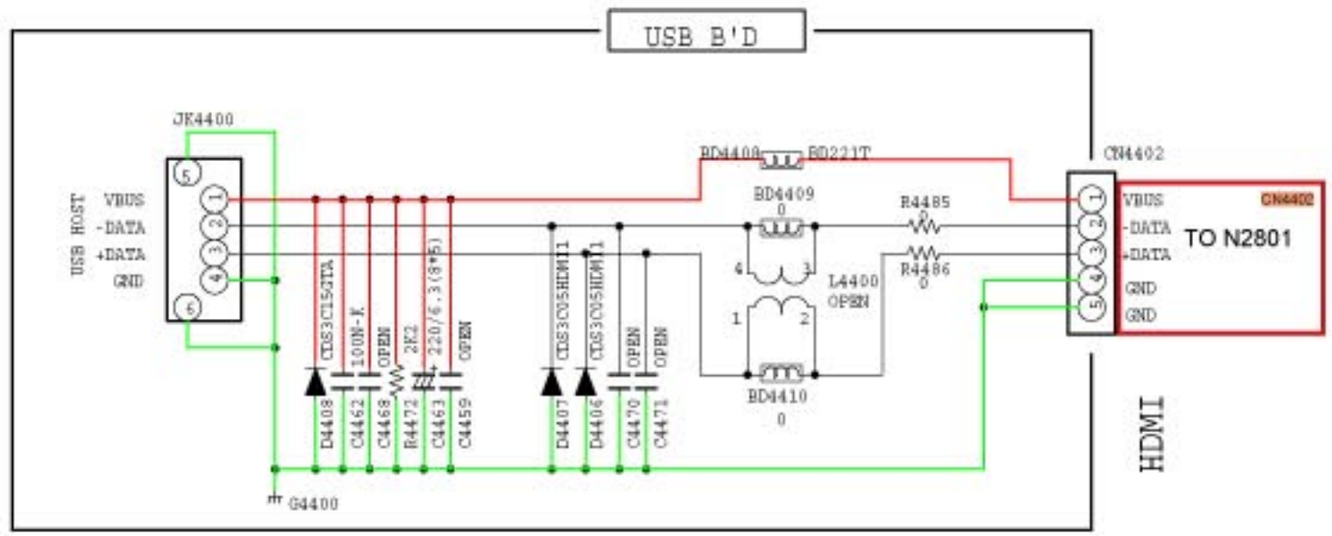

GND POWER + POWER - STBY POWER

SCHEMATIC DIAGRAMS (23/27)
FRONT HDMI UNIT

OPTIONAL CIRCUIT

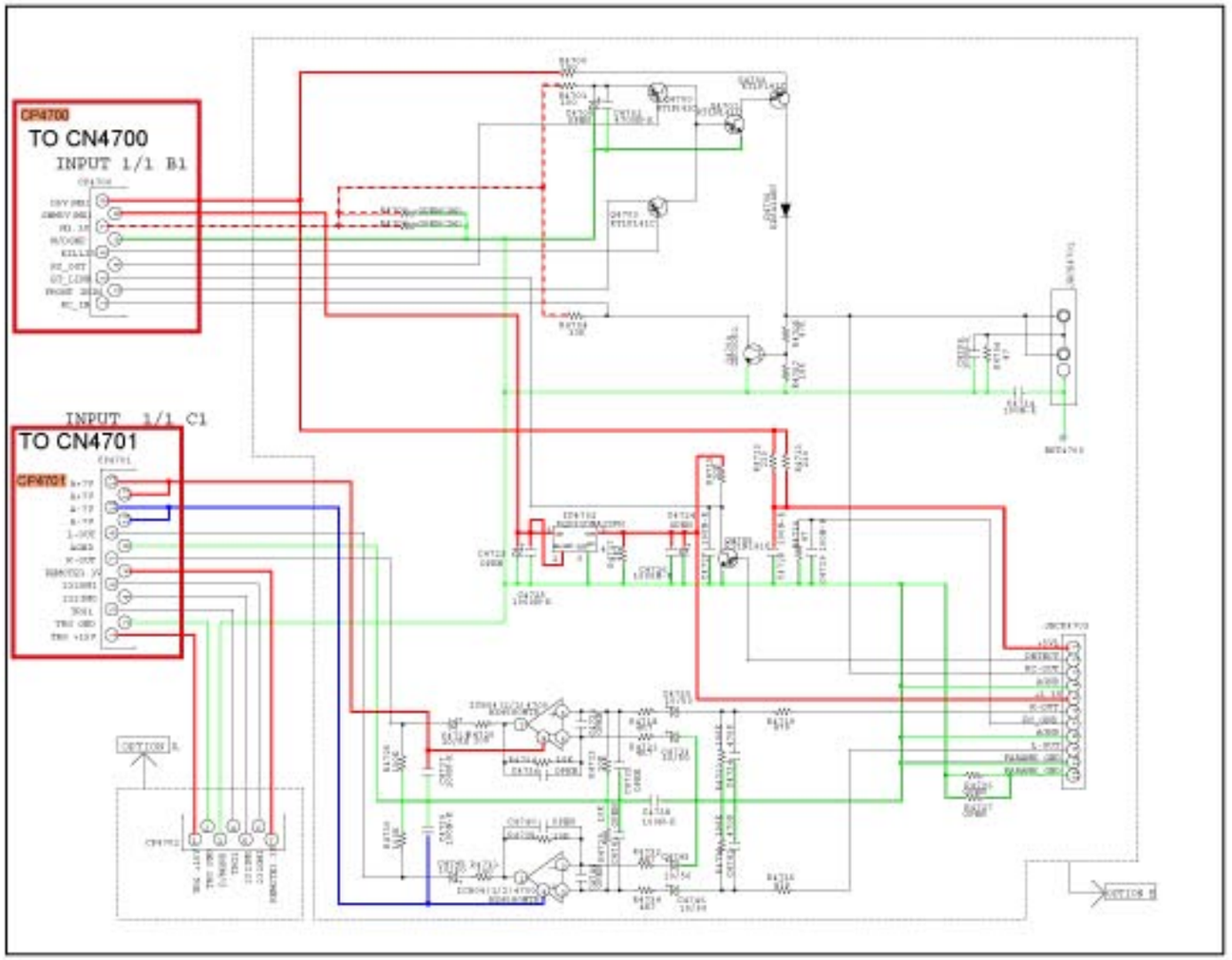

RS232 / TRI PART

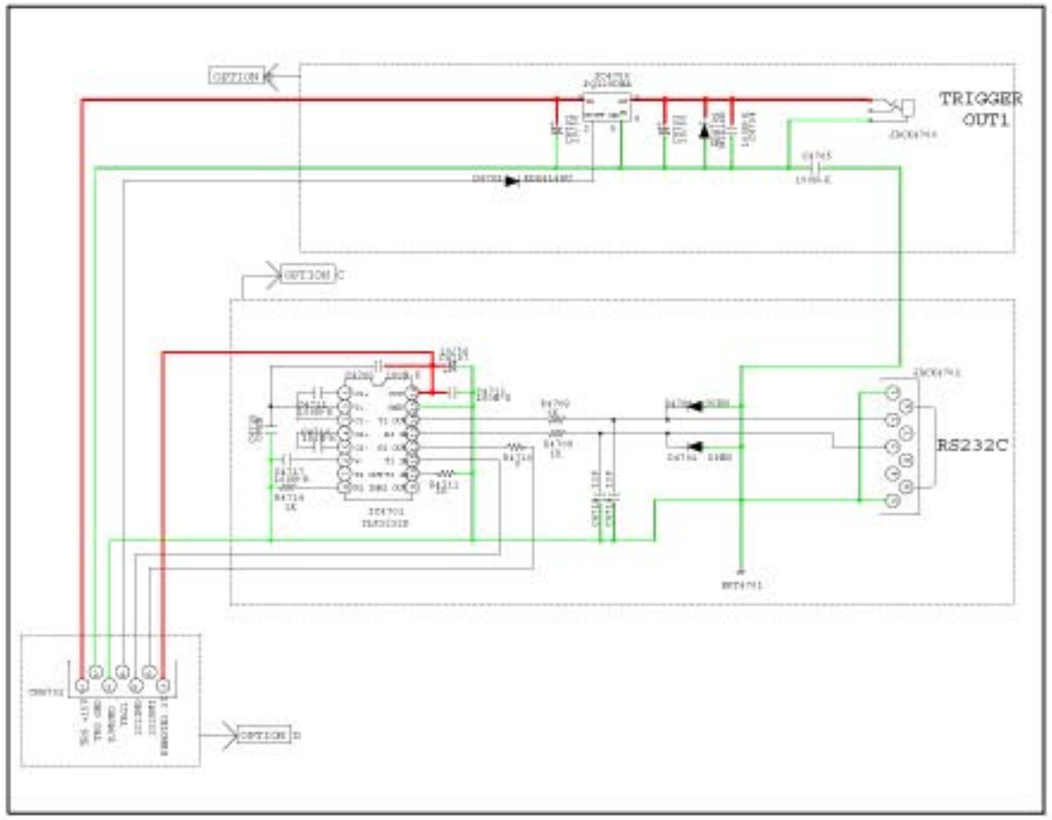

MODEL	DR5007		
AREA	U	M	K
OPTION A	O	X	X
OPTION B	X	X	X
OPTION C	O	X	X
OPTION D	O	X	X
OPTION E	X	X	X

GND POWER + POWER - STBY POWER

SCHEMATIC DIAGRAMS (24/27)
RS232 / OPTIONAL CIRCUIT UNIT

VIDEO PART

VIDEO_F/CNT

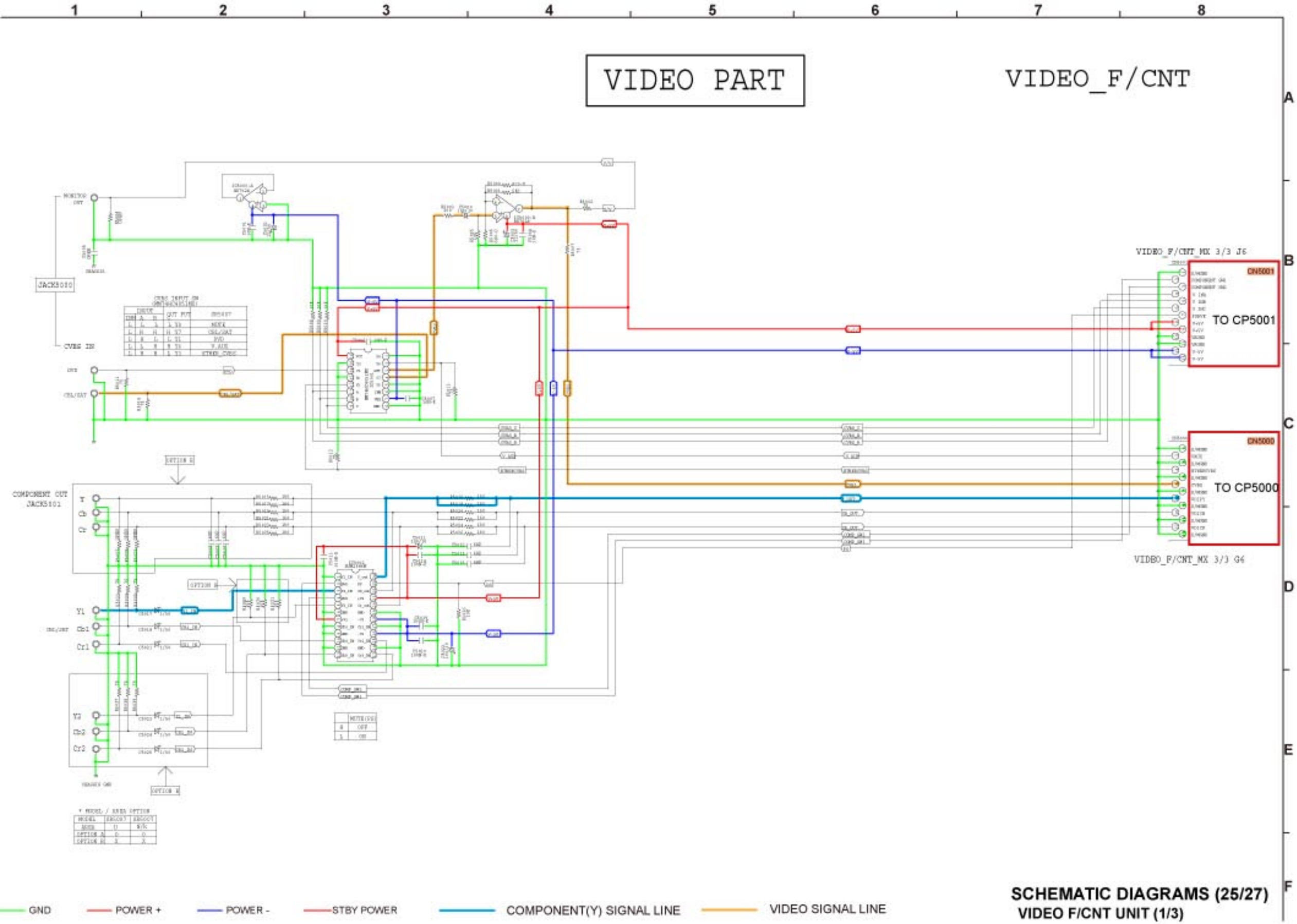

SCHEMATIC DIAGRAMS (25/27)

VIDEO F/CNT UNIT (1/3)

VIDEO_F/CNT

FRONT_CNT PART

FUSE	F5001,F5002,F5003,F5004	F5000
SR5007	T1.6A/250V	OPEN

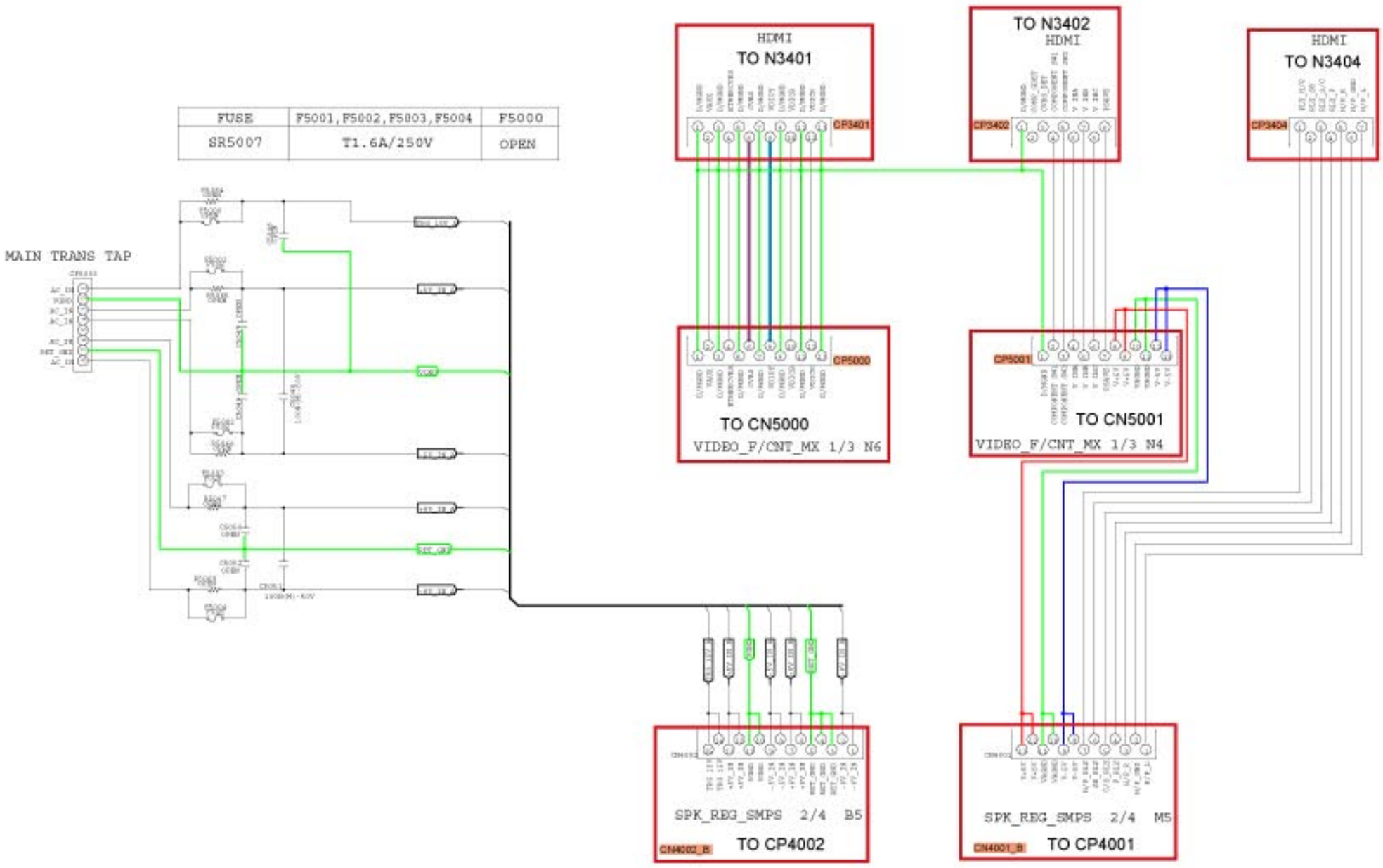

GND — POWER + — POWER - — STBY POWER — ANALOG AUDIO SIGNAL LINE — COMPONENT(Y) SIGNAL LINE

SCHEMATIC DIAGRAMS (26/27)
VIDEO F/CNT UNIT (2/3)

VIDEO_F/CNT 3/3

EXT_IN PART

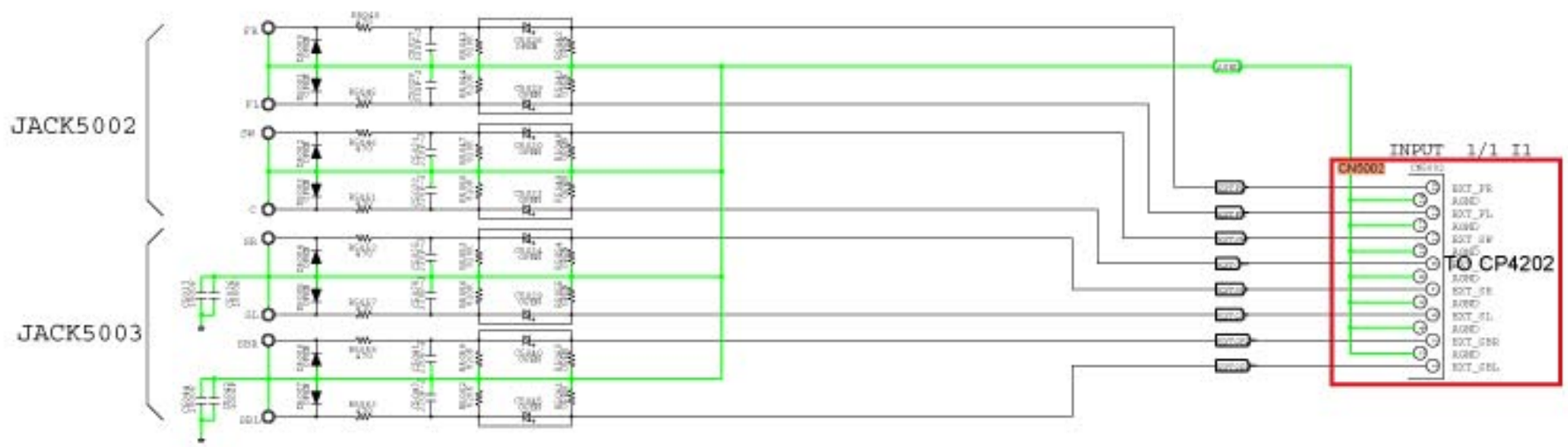

GND POWER + POWER - STBY POWER

SCHEMATIC DIAGRAMS (27/27)
VIDEO F/CNT UNIT (3/3)

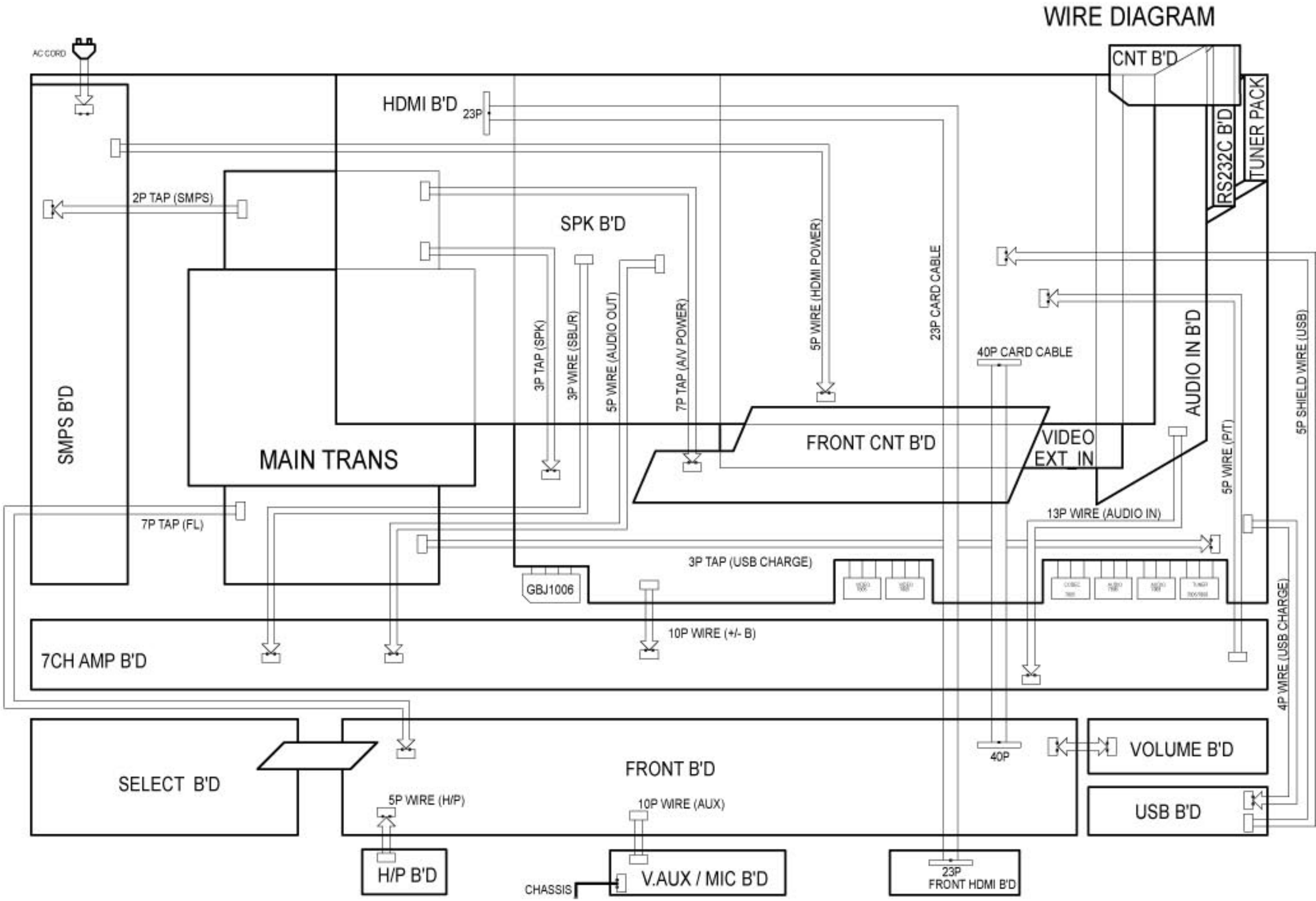
WIRE DIAGRAM
AC CORD
CNT B'D
HDMI B'D
23P
RS232C B'D
TUNER PACK
2P TAP (SMPS)
SPK B'D
5P WIRE (HDMI POWER)
23P CARD CABLE
3P TAP (SPK)
3P WIRE (SBL/R)
5P WIRE (AUDIO OUT)
7P TAP (A/V POWER)
40P CARD CABLE
AUDIO IN B'D
5P SHIELD WIRE (USB)
SMPS B'D
MAIN TRANS
FRONT CNT B'D
VIDEO EXT_IN
5P WIRE (P/T)
7P TAP (FL)
13P WIRE (AUDIO IN)
3P TAP (USB CHARGE)
GBJ1006
10P WIRE (+/- B)
4P WIRE (USB CHARGE)
7CH AMP B'D
SELECT B'D
FRONT B'D
40P
VOLUME B'D
USB B'D
5P WIRE (H/P)
10P WIRE (AUX)
H/P B'D
CHASSIS
V.AUX / MIC B'D
23P
FRONT HDMI B'D

EXPLODED VIEW

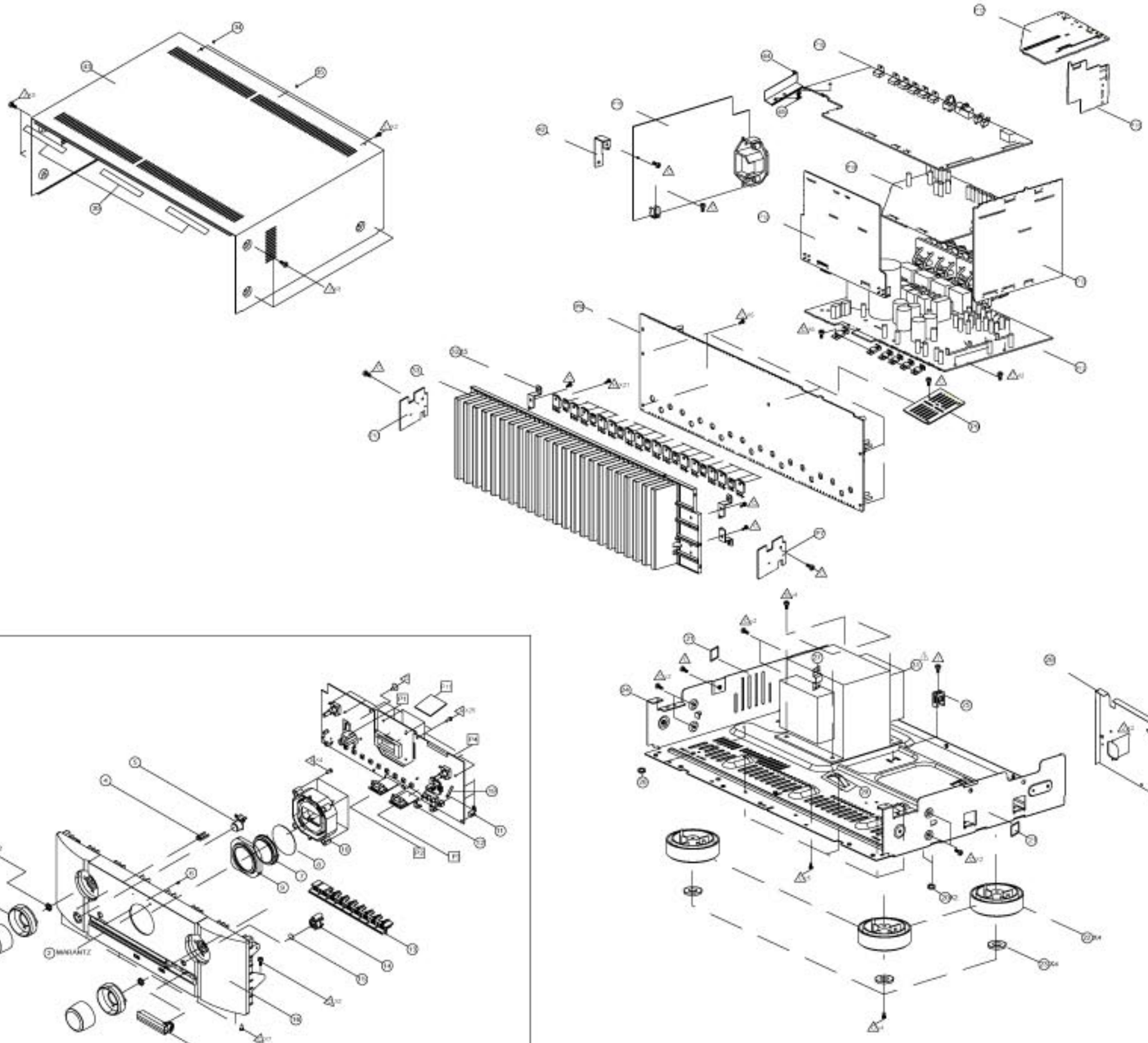

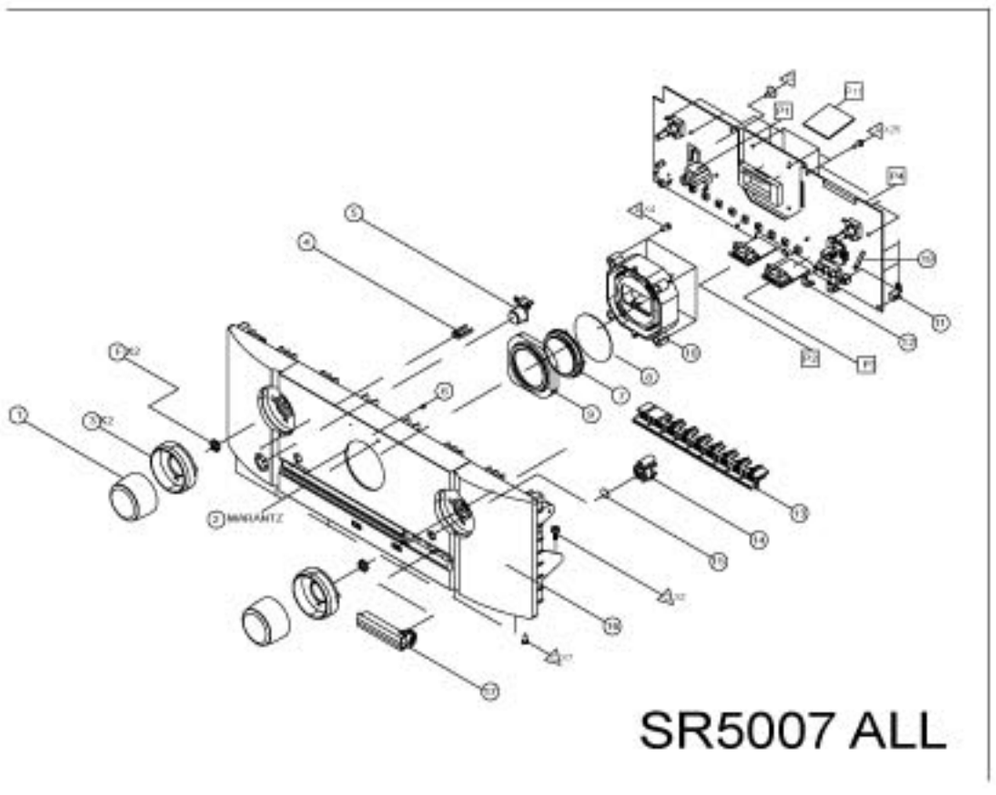

WARNING:
Parts marked with this symbol ⚠ have critical characteristics.
Use ONLY replacement parts recommended by the manufacturer.

PARTS LIST OF EXPLODED VIEW

∗Parts indicated by "nsp" on this table cannot be supplied.
∗PCB ASS'Y indicated by "nsp" on this table cannot be supplied. When repairing the PCB ASS'Y, check the board parts list and order replacement parts.
∗Parts indicated by the " ★ " mark are not illustrated in the exploded view.
∗The parts listed below are only for maintenance. Therefore they might differ from the parts used in the unit in appearances or dimensions.

NOTE: The symbols in the column "Remarks" indicate the following destinations.
U1B : U.S.A. & Canada model N1B : Europe model K1B : China model
BK : Black model SP : Premium Silver model

	Ref. No.	Part No.	Part Name	Remarks		Q'ty	New
	P4A	nsp	FRONT PCB UNIT ASS'Y		7028072381010	1	*
	P1	-	PCB H/P ASSY		-		
	P3	-	PCB USB ASSY		-		
	P4	-	PCB FRONT ASSY		-		
	P7	-	PCB GUIDE R		-		
	P9	-	PCB GUIDE TOP		-		
	P10	-	PCB GUIDE L		-		
	P11	-	PCB FH GUIDE		-		
	P12A	nsp	MAIN PCB UNIT ASS'Y	U1B	7028071841040	1	*
	P12A	nsp	MAIN PCB UNIT ASS'Y	N1B, N1SG	7028071841060	1	*
	P12A	nsp	MAIN PCB UNIT ASS'Y	K1B	7028071841070	1	*
	P12	-	PCB MAIN		-		
	P18	-	PCB SMPS ASSY	U1B	-		
	P18	-	PCB SMPS ASSY	N1B, K1B, N1SG	-		
	P19A	nsp	VIDEO PCB UNIT ASS'Y		7028071861040	1	*
	P14	-	PCB FRONT CNT		-		
	P19	-	PCB VIDEO ASSY		-		
	P15A	nsp	RS232 PCB UNIT ASS'Y	U1B, N1B, N1SG	7028071871020	1	*
	P15A	nsp	RS232 PCB UNIT ASS'Y	K1B	7028071871030	1	*
	P15	-	PCB RS232C ASSY		-		
	P17	-	PCB RC5 MX		-		
	P16A	8U6391003800M	PCB HDMI ASSY	U1B	7025HK1117015	1	*
	P16A	8U6391004500M	PCB HDMI ASSY	N1B, N1SG	7025HK1117025	1	*
	P16A	8U6391005000M	PCB HDMI ASSY	K1B	7025HK1117045	1	*
	P2	-	PCB FRONT HDMI ASSY		-		
	P16	-	PCB HDMI ASSY		-		
	P8A	nsp	7CH_AMP PCB UNIT ASS'Y		70280694110T0	1	
	P8	-	PCB AMP ASSY		-		
	P13A	nsp	INPUT PCB UNIT ASS'Y		7028071881040	1	*
	P13	-	PCB INPUT		-		
	1	96341210078OM	VOLUME KNOB	U1B, N1B, K1B	5080212691000S	2	
	1	96341210079OM	VOLUME KNOB	N1SG	5087212691100S	2	
	2	96342100620OM	BADGE(MARANTZ) SILVER/GRAY		5630210678000S	1	
	3	94342410027OM	DECORATION RING	U1B, N1B, K1B	5127210981000S	2	
	3	94342410028OM	DECORATION RING	N1SG	5127210981100S	1	
	4	00M10BW355010	LENS POWER		3710211083000S	1	

	Ref. No.	Part No.	Part Name	Remarks		Q'ty	New
	5	411510021005M	BUTTON POWER	U1B, N1B, K1B	5090213961000S	2	
	5	963411012000M	BUTTON POWER	N1SG	5097213961100S	1	
	6	943423100290M	LENS BUTTON		3070211183000S	2	
	7	416510046009M	WINDOW CENTER SR7005 A332		5070213183000S	1	
	8	416510047101M	WINDOW FILTER SR7005 A332		1217211562000S	1	
	9	943424100250M	HOLDER WINDOW	U1B, N1B, K1B	4320211091000S	1	
	9	943424100260M	HOLDER WINDOW	N1SG	4320211091100S	1	
	10	nsp	DECORATION WINDOW		5120210991000S	1	
	11	nsp	PLATE RCA		4470212216000S	1	
	12	nsp	PLATE USB		4470212206000S	1	
	13	943411101410M	BUTTON 9KEY	U1B, N1B, K1B	5097214711000S	1	
	13	943411101420M	BUTTON 9KEY	N1SG	5097214711100S	1	
	14	nsp	HOLDER REMOCON	U1B, N1B, K1B	4320211081000S	1	
	14	nsp	HOLDER REMOCON	N1SG	4320211081000S	1	
	15	481510019100M	LENS IR BL SR7005 A332		3710211173000S	1	
	16	963402102470M	PANEL FRONT	U1B, N1B, K1B	3067215281200S	1	*
	16	963402102480M	PANEL FRONT	N1SG	3067215281300S	1	*
	17	943419100320M	COVER ASSY	U1B, N1B, K1B	4318215411010	1	
	17	943419100330M	COVER ASSY	N1SG	4318215411110	1	
	19	nsp	CLAMP		4330000310000S	1	
	20	nsp	CUSHION SCREW		4050213025000S	3	
	21	nsp	CUSHION SIDE		4050213095000S	2	
	22	90M46BW056010	CUSHION FOOT		4050211175000S	4	
	23	00M46BW057210	FOOT FRONT		4007210321000S	4	
	24	nsp	CHASSIS MAIN		3200214266100S	1	*
	25	nsp	SUPPORTER PCB		4070001601010S	1	
	27	nsp	SIDE BRACKET		4010210686000S	1	
	28	nsp	CHASSIS BACK	U1B	3207214246400S	1	*
	28	nsp	CHASSIS BACK	N1B, N1SG	3207214246410S	1	*
	28	nsp	CHASSIS BACK	K1B	3207214246500S	1	*
	29	nsp	SHEET RATING CHASSIS (SEAL)		1210211909000S	1	
	30	nsp	SHEET HIMELON		1210211629000S	3	
⚠	31	963101101570S	POWER TRANS	U1B	8200960660850S	1	*
⚠	31	963101101580S	POWER TRANS	N1B, N1SG	8200960660860S	1	*
⚠	31	963101101590S	POWER TRANS	K1B	8200960660870S	1	*
	32	nsp	BRACKET HEAT SINK		4010056906010S	1	
	33	nsp	HEAT SINK		2120212048000S	1	
	34	nsp	MASK		1210211362000S	1	
	35	nsp	TOOTHED WASHER		1530210126000S	1	
	42	nsp	BRACKET		401021488600DS	1	
	43	963403100710D	CABINET TOP	U1B, N1B, K1B	3007212026000S	1	
	43	963403100720D	CABINET TOP	N1SG	3007212026010S	1	
	44	nsp	BRACKET HDMI		4010215226000S	1	
	45	nsp	SUPPORTER(4.8mm)		4070211653000S	1	
	★ 46	00D9630235204	TR 2SB1647Y	Q410, Q422, Q434, Q446, Q458, Q470, Q482	J5011647Y0170S		
	★ 47	963219003340S	TR 2SC KTC3964/TO126S-BULK	Q409, Q421, Q433, Q445, Q457, Q469, Q481	J5023964000010S		
	★ 48	00D9630235301	TR 2SD2560Y	Q404, Q416, Q428, Q440, Q452, Q464, Q476	J5032560Y0170S		

	Ref. No.	Part No.	Part Name	Remarks		Q'ty	New
SCREWS							
	A	nsp	SCREW +2S 3X10 B-TYPE ZNW/BH		B020030101B10S	29	
	C	nsp	SCREW +2S 3X8(ROUND BK/BH		B020230083B10S	50	
		nsp	SCREW +2S 3X8(ROUND)(DA CHENG) BK/BH		B020230083B10D	-	*
	D	nsp	SCREW +2S 3X8 ZnY WASHER PI12		1500001456010S	1	
	G	nsp	SCREW +3S 4X10 P+S WASHER(ROUND)BK/BH		B028940101B11S	4	
	H	nsp	SCREW 2S 3X14 P(Φ6)+S-WASHER ZNY/HH		B018230141H11S	21	
		nsp	SCREW +2S 3X14 P(Φ6)+S-WASHER ZNY/HH		B018230141H11D	-	*
	I	nsp	SCREW +2S 3X17 B-TYPE(DA CHENG) BK/BH		B020030171B10S	1	
	J	nsp	SCREW +2S 4X8 B-TYPE(DOT)(DACHENG) BK/BH		1500040083B10S	8	
	K	nsp	SCREW +2S 3X10 B-TYPE(DOT) BK/BH		B020030103B11S	27	
	L	nsp	SCREW +3S 3X6(DOT)CBTS(S)-B		B020930063B10S	12	

PACKING VIEW

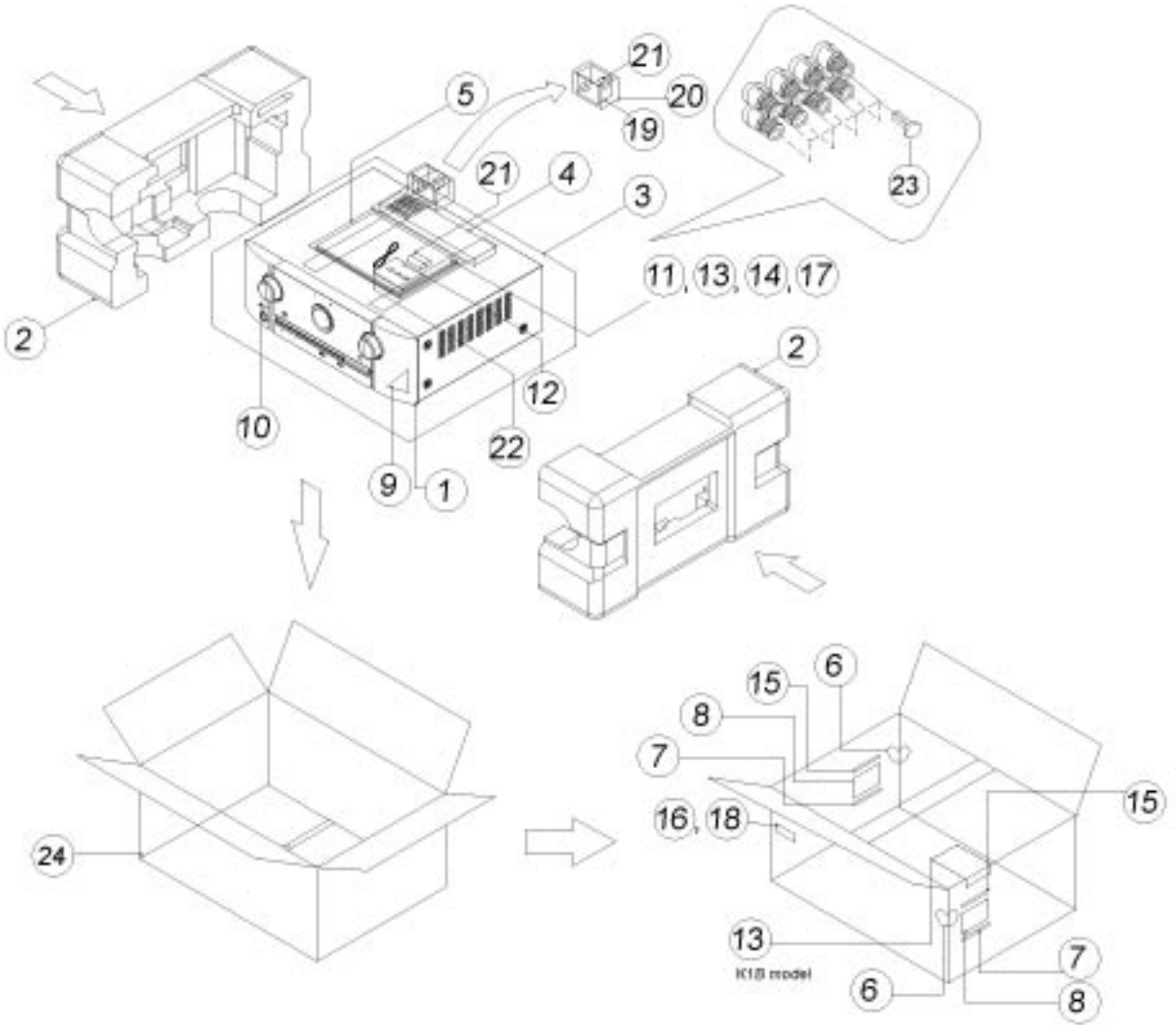

PARTS LIST OF PACKING & ACCESSORIES

*Parts indicated by "nsp" on this table cannot be supplied.
*The parts listed below are only for maintenance. Therefore they might differ from the parts used in the unit in appearances or dimensions.

NOTE: The symbols in the column "Remarks" indicate the following destinations.
U1B : U.S.A. & Canada model N1B : Europe model K1B : China model
BK : Black model SP : Premium Silver model

	Ref. No.	Part No.	Part Name	Remarks		Q'ty	New
	1	-	set		-		
	2	9635331011 80M	CUSHION SNOW L/R		6230213204000S	1	*
	3	nsp	PE SHEET		6327040059000S	1	
	4	30701009900AM	REMOCON		8300017000010S	1	*
	5	nsp	POLY BAG		6337000240010S	1	
	6	nsp	LABEL COLOR	N1SG	5507000004600S	1	
	7	nsp	LABEL MAC ADDRESS		5507000009700S	1	
	8	nsp	SHIPPING LABEL		5500000007770S	1	
	9	nsp	POP LABEL	U1B, N1B, N1SG	5507000009640S	1	*
	9	nsp	POP LABEL	K1B	-	1	*
	10	nsp	LABEL(POWER S/W)	K1B	5507000005270S	1	
	11	54111078900AM	GETTING STARTED	U1B	5707000007240S	1	*
	11	54111079100AM	GETTING STARTED	N1B, N1SG	5707000007250S	1	*
	11	54111079200AM	GETTING STARTED	K1B	5707000007260S	1	*
	12	35201009600AM	DISK CD MANUAL	U1B	6517000000980S	1	*
	12	35201009700AM	DISK CD MANUAL	N1B, N1SG	6517000000990S	1	*
	12	35201009800AM	DISK CD MANUAL	K1B	6517000001000S	1	*
	13	nsp	WARRANTY CARD	U1B	5727000000111S	1	
	13	nsp	WARRANTY CARD	K1B	5727000000310S	1	
	14	nsp	CARD WARRANTY(CANADA)		5727041650142S	1	
	15	nsp	LABEL OLD GOST	N1B, N1SG	5507000005560S	1	
	16	nsp	LAST FM LABEL	N1B, N1SG	5507000009900S	1	
	17	nsp	CARD Pass	K1B	5777000000020S	1	
	18	nsp	SIRIUS XM LABEL	U1B	5507000009890S	1	*
	19	32401000600AD	MIC CONDENSER	ACM1HB	M040000310080S	1	
	20	nsp	POLY BAG ACCESSORY		6330210222000S	1	
	21	nsp	BATTERY,DRY		G670001R50240S	2	
	22	963116100080S	ANTENNA,WIRE		E605010140010S	1	
	23	nsp	BUSHING TERMINAL		2410040353010S	14	
	24	963531102520M	BOX,GIFT		6007212150040S	1	*
⚠	★ 25	90M-ZC000470R	CORD ASSY	U1B	L068125130010S	1	
⚠	★ 25	90M-ZC000600R	CORD ASSY	N1B, N1SG	L068250160020S	1	
⚠	★ 25	963611004880S	CORD ASSY	K1B	L068250100050S	1	
	★ 26	544510081006M	LABEL HOT-SURFACE		5507000003730S	1	

SEMICONDUCTORS

Only major semiconductors are shown. General semiconductors etc. are omitted from list.
The semiconductors which have a detailed drawing in a schematic diagram are omitted from list.

1. IC's

R5F56108VNFP (HDMI : U3002)

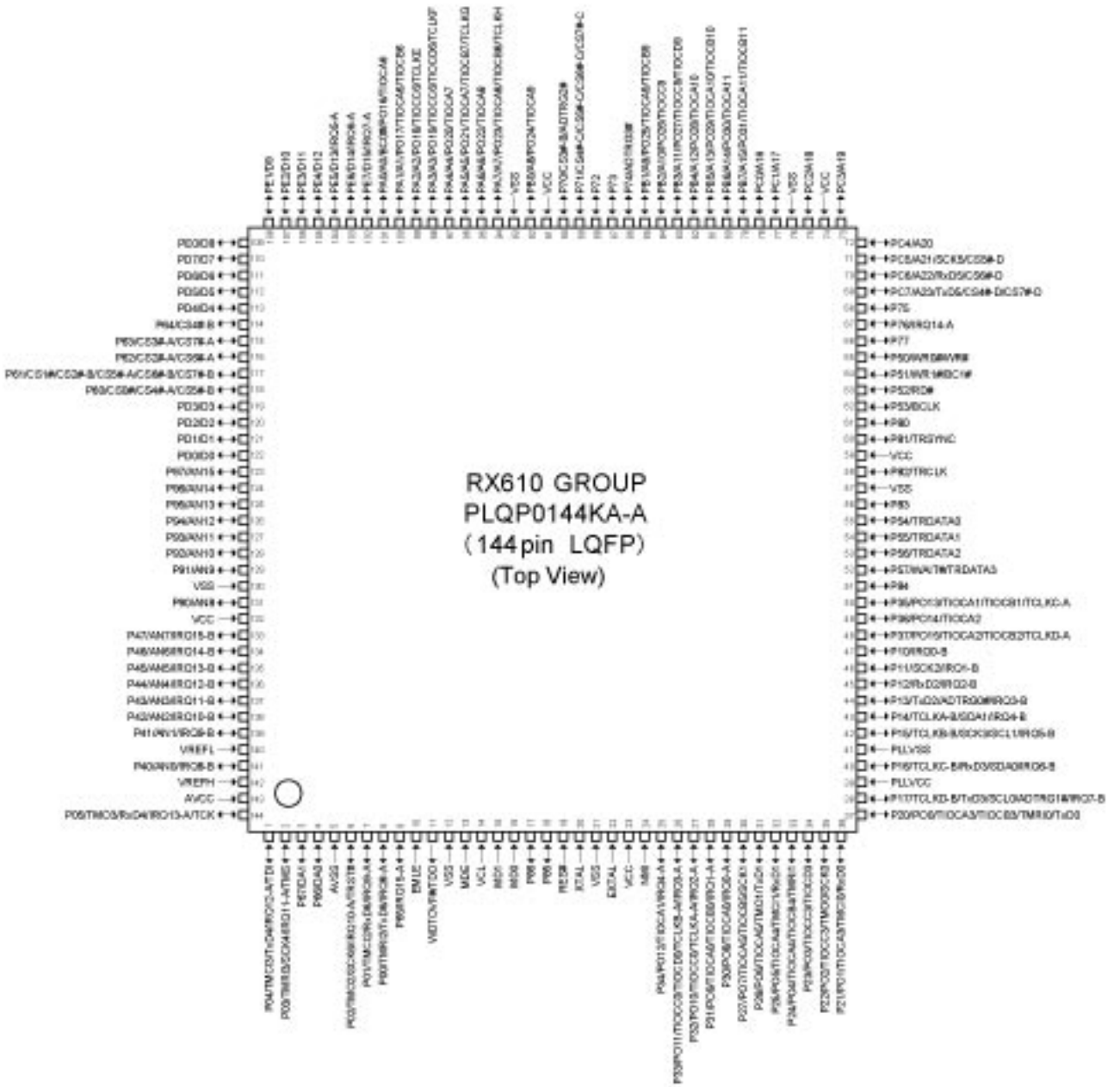

R5F56108VNFP Terminal Functions

Pin	Pin Name	Symbol	I/O	Pull up/ down	LvCnv	STBY	STOP	CEC STBY	Function
1	P04/IRQ12-A/TMCI3/ TxD4/TDI	NC	I	M3VPu	-	I	I	I	NC
2	P03/IRQ11-A/TMRI3/ SCK4/TMS	NC	I	M3VPu	-	I	I	I	NC
3	P67/DA1	HIN SELA	O	-	-	L	L	L	TC74VHC4051AFT control pin. (Control the detection of HDMI 5V INPUT for CEC STANDBY.)
4	P66/DA0	HIN SELB	O	-	-	L	L	L	TC74VHC4051AFT control pin. (Control the detection of HDMI 5V INPUT for CEC STANDBY.)

Pin	Pin Name	Symbol	I/O	Pull up/ down	LvCnv	STBY	STOP	CEC STBY	Function
5	AVSS	AVSS	-	-	-	-	-	-	GND
6	P02/IRQ10-A/TMO2/ SCK6/TRST#	NC	I	Pd	-	I	I	I	NC
7	P01/IRQ9-A/TMCI2/ RxD6	RXD MI232O	I	M3VPu	-	I	I	I	Data received from the external pin(AMX)/Use for firmware upgrading by DFW.
8	P00/IRQ8-A/TMRI2/ TxD6	TXD MO232I	O	-	-	L	L	L	Data transfer to external pin(AMX)/Use for firmware upgrading by DFW.
9	P65/IRQ15-A	POWER KEY	I	M3VPu	-	I	I	I	POWER KEY (Waiting Mode cancel, interrupt port)
10	EMLE	NC	I	Pd	-	-	-	-	NC
11	WDTOVF#/TDO	NC	O/O	-	-	-	-	-	NC
12	VSS	VSS	I	-	-	-	-	-	GND
13	MDE	MDE	I	Pd	-	-	-	-	NC
14	VCL	VCL	I	-	-	-	-	-	Smoothing capacitor connection pin
15	MD1	MD1	I	M3VPu	-	-	-	-	NC
16	MD0	MD0	I	M3VPu	-	-	-	-	NC
17	P86	(CEC POWER2)	O	-	-	L	L	H	Reserve (CEC POWER2 control)
18	P85	REMOTE POWER(232C)	O	-	-	L	L	L	232C POWER SUPPLY (REMOTE 3.3V) control pin.(ON: H)
19	RES#	RESET	I	-	-	-	-	-	Reset input (reset: L)
20	XTAL	XTAL	I	-	-	-	-	-	Clock input
21	VSS	VSS	-	-	-	-	-	-	GND
22	EXTAL	EXTAL	-	-	-	-	-	-	Clock output
23	VCC	VCC	-	-	-	-	-	-	+3.3V
24	NMI	NMI	I	M3VPu	-	-	-	-	NC
25	P34/IRQ4-A/PO12/ TIOCA1	BDOWN	I	-	-	I	I	I	Power failure detection pin(Power failure:L)
26	P33/IRQ3-A/PO11/ TIOCC0/TIOCD0/ TCLKB-A	PLDAERR	I	-	-	L	L	L	PLD ERROR detection pin
27	P32/IRQ2-A/PO10/ TIOCC0/TCLKA-A	FLASHER IN (U Only)	I	-	-	I	I	I	FLASHER (RC-5) input pin (NR1603 : U Version Only , SR5007 : All Version)
28	P31/IRQ1-A/PO9/ TIOCA0/TIOCB0	ADV8002 (NR1603) or ADV8003 (SR5007) INT1	I	-	-	I	I	I	HDMI transmitter / OSD (NR1603=ADV8002/ SR5006=ADV8003) INT1 output pin
29	P30/IRQ0-A/PO8/ TIOCA0	RC IN	I	-	-	I	I	I	Remote control signal input pin
30	P27/PO7/TIOCA5/ TIOCB5/SCK1	HDMI A SEL	O	-	-	L	L	L	TC74VHCT244AFT control pin. (Control the HDMI Audio input. H : DSP signal path / L : HDMI Rx -> Tx)
31	P26/PO6/TIOCA5/ TMO1/TxD1	RC OUT	O	-	-	H	L	H	RC-5 CODE output pin
32	P25/PO5/TIOCA4/ TMCI1/RxD1	KILL IR	O	-	-	L	L	L	RC input Disable/Enable control pin
33	P24/PO4/TIOCA4/ TIOCB4/TMRI1	TU RST	O	SW3VPu	-	L	L	L	TUNER RESET pin
34	P23/PO3/TIOCC3/ TIOCD3	E RESET	O	N3VPu	-	L	L	L	ETHERNET RESET control pin (DM860)
35	P22/PO2/TIOCC3/ TMO0/SCK0	E POWER	O	-/-	-	L	L	L	ETHERNET POWER SUPPLY (NET3.3V) control pin.(ON:H)
36	P21/PO1/TIOCA3/ TMCI0/RxD0	E_RXDMIEO	I	-/-	-	I	I	I	ETHERNET communication control pin (DM860)
37	P20/PO0/TIOCA3/ TIOCB3/TMRI0/TxD0	E_TXDMOEI	O	-/-	-	L	L	L	ETHERNET communication control pin (DM860)
38	P17/IRQ7-B/TCLKD-B/ TxD3/SCL0/ADTRG1#	TU SCLK	O	-	-	L	L	L	TUNER control pin

Pin	Pin Name	Symbol	I/O	Pull up/ down	LvCnv	STBY	STOP	CEC STBY	Function
39	PLLVCC	PLLVCC	-	-	-	-	-	-	+3.3V
40	P16/IRQ6-B/TCLKC-B/ RxD3/SDA0	TU SDIO	I_O	-	-	L	L	L	TUNER control pin
41	PLLVSS	PLLVSS	-	-	-	-	-	-	GND
42	P15/IRQ5-B/TCLKB-B/ SCK3/SCL1	HSCL (400k)	O	CEC3VPu	-	L	L	L	VIDEO I2C Control for - HDMI SW (ADV3002) / HDMI RX , A to H Decoder (ADV7850) / HDMI ip Scaler , TX (ADV8002 or ADV8003)
43	P14/IRQ4-B/TCLKA-B/ SDA1	HSDA (400k)	I_O	CEC3VPu	-	L	L	L	VIDEO I2C Control for - HDMI SW (ADV3002) / HDMI RX , A to H Decoder (ADV7850) / HDMI ip Scaler , TX (ADV8002 or ADV8003)
44	P13/IRQ3-B/TxD2/ ADTRG0#	ADV8002 (NR1603) or ADV8003 (SR5007) SPI MO	O	-	-	L	L	L	OSD control pin (ADV8002 or ADV8003)
45	P12/IRQ2-B/RxD2	ADV8002 (NR1603) or ADV8003 (SR5007) SPI MI	I	-	-	L	L	L	OSD control pin (ADV8002 or ADV8003)
46	P11/IRQ1-B/SCK2	ADV8002 (NR1603) or ADV8003 (SR5007) SPI CLK	O	-	-	L	L	L	OSD control pin (ADV8002 or ADV8003)
47	P10/IRQ0-B	ADV8002 (NR1603) or ADV8003 (SR5007) SPI CS	O	-	-	L	L	L	OSD control pin (ADV8002 or ADV8003)
48	P37/PO15/TIOCA2/ TIOCB2/TCLKD-A	EEPROM SDA	I_O	M3VPu	-	I	I	I	EEPROM control pin
49	P36/PO14/TIOCA2	EEPROM SCL	O	M3VPu	-	I	I	I	EEPROM control pin
50	P35/PO13/TIOCA1/ TIOCB1/TCLKC-A	ADV7850 RST	O	-	-	L	L	L	HDMI RX , A to H Decoder (ADV7850) RESET control pin
51	P84	CEC_OUT	O	-	-	L	L	-	CEC-D signal output pin
52	P57/WAIT#/TRDATA3	ADV3002 RST	O	SW3VPu	-	L	L	L	HDMI switcher RESET control pin (ADV3002)
53	P56/TRDATA2	E SPI MOEI	O	N3VPu	-	L	L	L	ETHERNET communication control pin (DM860)
54	P55/TRDATA1	ADV8002 (NR1603) or ADV8003 (SR5007) RST	O	SW3VPu	-	L	L	L	HDMI Tx/ip Scaler/OSD RESET control pin (ADV8003)
55	P54/TRDATA0	E SPI MIEO	I	N3VPu	-	I	L	I	ETHERNET communication control pin (DM860)
56	P83	E SPI CLK	O	N3VPu	-	L	L	L	ETHERNET communication control pin (DM860)
57	VSS	VSS	-	-	-	-	-	-	GND
58	P82/TRCLK	FL CE	O	-	-	L	L	L	VFD control pin
59	VCC	VCC	-	-	-	-	-	-	+3.3V
60	P81/TRSYNC	FL RST	O	-	-	L	L	L	VFD control pin
61	P80	VIN A	O	-	3->5	L	L	L	A-VIDEO (CVBS) switcher control pin (MM74HC4051MX)
62	BCLK/P53	BT LINK	I	-	-	I	I	I	Bluetooth (M-Xport) detection pin
63	P52/RD#	COMP SW1	O	-	3->5	L	L	L	A-VIDEO (COMPONENT) switcher control pin (NJM2586M)
64	P51/WR1#/BC1#	PSAVE	O	-	3->5	L	L	L	A-VIDEO (COMPONENT) switcher control pin (NJM2586M) (H=Output Enable / L=Output Disable)

Pin	Pin Name	Symbol	I/O	Pull up/ down	LvCnv	STBY	STOP	CEC STBY	Function
65	P50/WR0#/WR#	VIN C	O	-	3->5	L	L	L	A-VIDEO (CVBS) switcher control pin (MM74HC4051MX)
66	P77	VIN B	O	-	3->5	L	L	L	A-VIDEO (CVBS) switcher control pin (MM74HC4051MX)
67	P76/IRQ14-A	TU GPO2_INT	I	-	-	L	L	L	TUNER GPIO2 input pin
68	P75	DSP ROMRST	O	-	-	I	I	I	Memory reset for DSP (Reset : L)
69	PC7/A23/CS4#-D/ CS7#-D/TxD5	DSP MOSI	O	DA3VPu	-	L	L	L	DSP control pin (ADSP21487KSWZ-3B)
70	PC6/A22/CS6#-D/ RxD5	DSP MISO	I	DA3VPu	-	L	L	L	DSP control pin (ADSP21487KSWZ-3B)
71	PC5/A21/CS5#-D/ SCK5	DSPI CLK	O	DA3VPu	-	L	L	L	DSP control pin (ADSP21487KSWZ-3B)
72	PC4/A20	DSP RST	O	-	-	L	L	L	DSP(ADSP21487KSWZ-3B) reset output pin (Reset : L)
73	PC3/A19	DSP FLAG0	I	Pd	-	L	L	L	DSP control pin (ADSP21487KSWZ-3B)
74	VCC	VCC	-	-	-	-	-	-	+3.3V
75	PC2/A18	DSP ICS	O	DA3VPu	-	L	L	L	DSP control pin (ADSP21487KSWZ-3B)
76	VSS	VSS	-	-	-	-	-	-	GND
77	PC1/A17	GRN LED	O	-	-	L	L	L	POWER LED control pin(ON:H)
78	PC0/A16	RED LED	O	-	-	L	L	H	POWER/STANDBY LED control pin (ON:H)
79	PB7/A15/PO31/ TIOCA11/TIOCB11	H/P RLY	O	-	-	L	L	L	HEADPHONE RLY control pin
80	PB6/A14/PO30/ TIOCA11	FRONT RLY	O	-	-	L	L	L	FRONT Ch RELAY control pin
81	PB5/A13/PO29/ TIOCA10/TIOCB10	HIN SELC	O	-	-	L	L	L	TC74VHC4051AFT control pin. (Control the detection of HDMI 5V INPUT for CEC STANDBY.)
82	PB4/A12/PO28/ TIOCA10	TU_SEN	O	-	-	L	L	L	TUNER control pin
83	PB3/A11/PO27/ TIOCC9/TIOCD9	C/S RLY	O	-	-	L	L	L	CENTER/SURROUND Ch RELAY control pin
84	PB2/A10/PO26/ TIOCC9	SB RLY	O	-	-	L	L	L	SURROUND-BACK Ch RELAY control pin
85	PB1/A9/PO25/ TIOCA9/TIOCB9	D5V POWER	O	-	-	L	L	L	DIGITAL POWER SUPPLY (D3.3V) control pin (ON:H)
86	P74/ADTRG3#	DIR CE	O	-	-	L	L	L	DIR control pin (LC89058W-E)
87	P73	DIR DIN	O	-	-	L	L	L	DIR control pin (LC89058W-E)
88	P72	DIR DOUT	I	DA3VPu	-	I	I	I	DIR control pin (LC89058W-E)
89	P71/CS4#-C/CS5#-C/ CS6#-C/CS7#-C	DIR CLK	O	-	-	L	L	L	DIR control pin (LC89058W-E)
90	P70/CS3#-B/ ADTRG2#	DIR RST	O	-	-	L	L	L	DIR RESET pin (LC89058W-E)
91	VCC	VCC	-	-	-	-	-	-	+3.3V
92	PB0/A8/PO24/TIOCA9	COMP SW2	O	-	3->5	L	L	L	A-VIDEO (COMPONENT) switcher control pin (NJM2586M)
93	VSS	VSS	-	-	-	-	-	-	GND
94	PA7/A7/PO23/ TIOCA8/TIOCB8/ TCLKH	FIL_CTRL (SR5007 Only)	O	-/-	-	L	L	L	FLD Filament voltage on/off pin (SR5007 only)
95	PA6/A6/PO22/TIOCA8	VSEL A	I	-	-	I	I	I	Master Volume rotation detection pin(Rotary encoder)
96	PA5/A5/PO21/ TIOCA7/TIOCB7/ TCLKG	VSEL B	I	-	-	I	I	I	Master Volume rotation detection pin(Rotary encoder)
97	PA4/A4/PO20/TIOCA7	E POWER 2 (Reserve)	O	-/-	-	L	L	L	Unused
98	PA3/A3/PO19/ TIOCC6/TIOCD6/ TCLKF	DAC(ETHER) MUTE	O	-	-	L	L	L	DAC (ETHER) MUTE control pin (PCM5100 for DM860)

Pin	Pin Name	Symbol	I/O	Pull up/ down	LvCnv	STBY	STOP	CEC STBY	Function
99	PA2/A2/PO18/ TIOCC6/TCLKE	PRE Z2 MUTE	O	-	-	L	L	L	Z2 PRE OUT MUTE control pin (SR5006 Only)
100	PA1/A1/PO17/ TIOCA6/TIOCB6	NC	O	-	-	L	L	L	Unused
101	PA0/A0/BC0#/PO16/ TIOCA6	PRE MUTE	O	-	-	L	L	L	PRE OUT MUTE control pin
102	PE7/IRQ7-A/D15	ADV8002 (NR1603) or ADV8003 (SR5007) INT2	I	-	-	I	I	I	HDMI TX INT2 input pin (ADV8002 or ADV8003)
103	PE6/IRQ6-A/D14	ADV7850 INT1	I	-	-	I	I	I	HDMI RX INT1 input pin (ADV7850)
104	PE5/IRQ5-A/D13	ADV7850 INT2	I	-	-	L	L	L	HDMI RX INT2 input pin (ADV7850)
105	PE4/D12	ISEL A	I	-	-	L	L	L	Input Selector rotation detection pin(Rotary encoder)
106	PE3/D11	ISEL B	I	-	-	L	L	L	Input Selector rotation detection pin(Rotary encoder)
107	PE2/D10	VOL CLK	O	-	-	L	L	L	FUNCTION / VOLUME control pin (R2A15218)
108	PE1/D9	VOL DATA	O	-	-	L	L	L	FUNCTION / VOLUME control pin (R2A15218)
109	PE0/D8	PLD WRITE	O	-	-	L	L	L	A.PLD /JTAG switching control pin
110	PD7/D7	JTAG TDO	I	-	-	L	L	L	A.PLD rewriting control pin (JTAG)
111	PD6/D6	JTAG TMS/ APLD CS	O/O	-	-	L	L	L	A.PLD rewriting & control pin
112	PD5/D5	JTAG TDI/ APLD DATA/ DAC DATA	O/O	-	-	L	L	L	A.PLD rewriting & control /DAC control pin
113	PD4/D4	JTAG TCK/ APLD CLK/ DAC CLK	O/O	-	-	L	L	L	A.PLD rewriting & control /DAC control pin
114	P64/CS4#-B	ADC RST	O	-	-	L	L	L	A/D converter control pin (AK5358B)
115	P63/CS3#-A/CS7#-A	TRIGGER OUT	O	-	-	L	L	L	DC OUTPUT (12Vdc OUT/Rear Panel) control pin
116	P62/CS2#-A/CS6#-A	E SPI CS	O	N3VPu	-	L	L	L	ETHERNET communication control pin(DM860)
117	P61/CS1#/CS2#-B/ CS5#-A/CS6#-B/ CS7#-B	DAC MS	O	-	-	L	L	L	D/A converter control pin (AK4358VQ)
118	P60/CS0#/CS4#-A/ CS5#-B	DAC RST	O	-	-	L	L	L	D/A converter control pin (AK4358VQ)
119	PD3/D3	DIRECT LED	O	-	-	L	L	L	DIRECT LED Control pin
120	PD2/D2	M-DAX LED	O	-	-	L	L	L	M-DAX LED Control pin
121	PD1/D1	FL CLK	O	-	-	L	L	L	VFD control pin
122	PD0/D0	FL DATA	O	-	-	L	L	L	VFD control pin
123	P97/AN15	DA POWER	O	-	-	L	L	L	DIGITAL AUDIO POWER SUPPLY (DA3.3V & DA1.2V) control pin.(ON:H)
124	P96/AN14	CEC POWER	O	-	-	L	L	H	HDMI CEC POWER SUPPLY (CEC5V & CEC3.3V & CEC1.8V) control pin. (ON:H)
125	P95/AN13	DV POWER1	O	-	-	L	L	※	Digital VIDEO POWER SUPPLY (DV5V & DV3.3V) control pin. *CEC STANDBY : MODE1=H , MODE2=L , MODE3=L
126	P94/AN12	DV POWER2	O	-	-	L	L	※	Digital VIDEO POWER SUPPLY (DV1.8V) control pin. *CEC STANDBY : MODE1=H , MODE2=L , MODE3=L
127	P93/AN11	MAIN POWER	O	-	-	L	L	L	MAIN POWER control pin
128	P92/AN10	CPU POWER	O	-	-	L	L	L	CPU INTERFACE POWER SUPPLY (SWM3.3V & SWM5V) control pin (POWER ON: H , CEC ON STANDBY: H)

Pin	Pin Name	Symbol	I/O	Pull up/ down	LvCnv	STBY	STOP	CEC STBY	Function
129	P91/AN9	TX EN	O	-	-	L	L	L	Front HDMI INPUT (AD8195) control pin
130	VSS	VSS	-	-	-	-	-	-	GND
131	P90/AN8	MODE	I	-	-	I	I	I	Destination detection pin
132	VCC	VCC	-	-	-	-	-	-	+3.3V
133	P47/IRQ15-B/AN7	THERMAL B/ DC DET/ASO	I	-	-	I	I	I	ASO PROTECT / DC PROTECT / HEAT PROTECT-B detection pin
134	P46/IRQ14-B/AN6	H/P DET / MIC DET/THERMAL A	I	-	-	I	I	I	MIC detection / Headphone detection / HEAT PROTECT-A detection pin
135	P45/IRQ13-B/AN5	KEY3	I	SW3VPu	-	I	I	I	Button input 3
136	P44/IRQ12-B/AN4	KEY2	I	SW3VPu	-	I	I	I	Button input 2
137	P43/IRQ11-B/AN3	KEY1	I	SW3VPu	-	I	I	I	Button input 1
138	P42/IRQ10-B/AN2	E SPI REQ	I	Pd	-	I	L	I	ETHERNET communication control pin(DM860)
139	P41/IRQ9-B/AN1	HDMI IN 5V SET	I	-	-	I	I	I	HDMI INPUT 5V (for EDID / HOT PLUG) detection pin
140	AVSS	AVSS	-	-	-	-	-	-	GND
141	P40/IRQ8-B/AN0	CEC_IN	I	SW3VPu	-	I	I	I	CEC-D signal input pin
142	VREF	VREF	-	-	-	-	-	-	Reference voltage (+3.3V) input pin for A/D port
143	AVCC	AVCC	-	-	-	-	-	-	+3.3V
144	P05/IRQ13-A/TMO3/ RxD4/TCK	NC	I	M3VPu	-	I	I	I	NC

ADV3002BSTZ (HDMI : U1001)

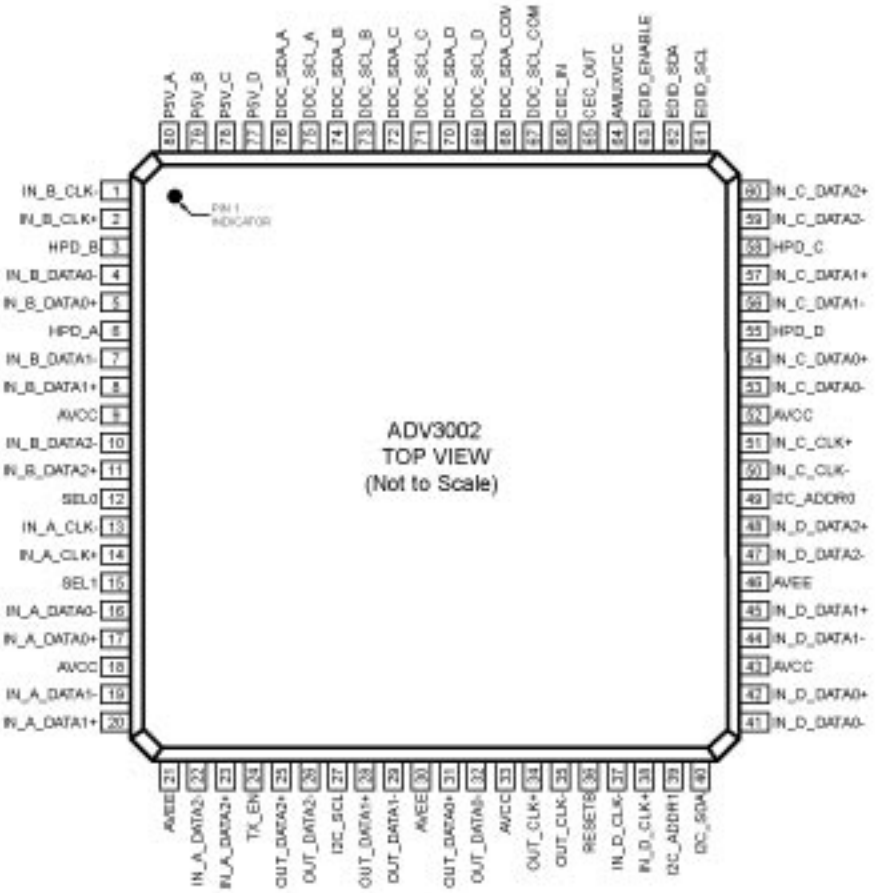

ADV3002BSTZ Block diagram

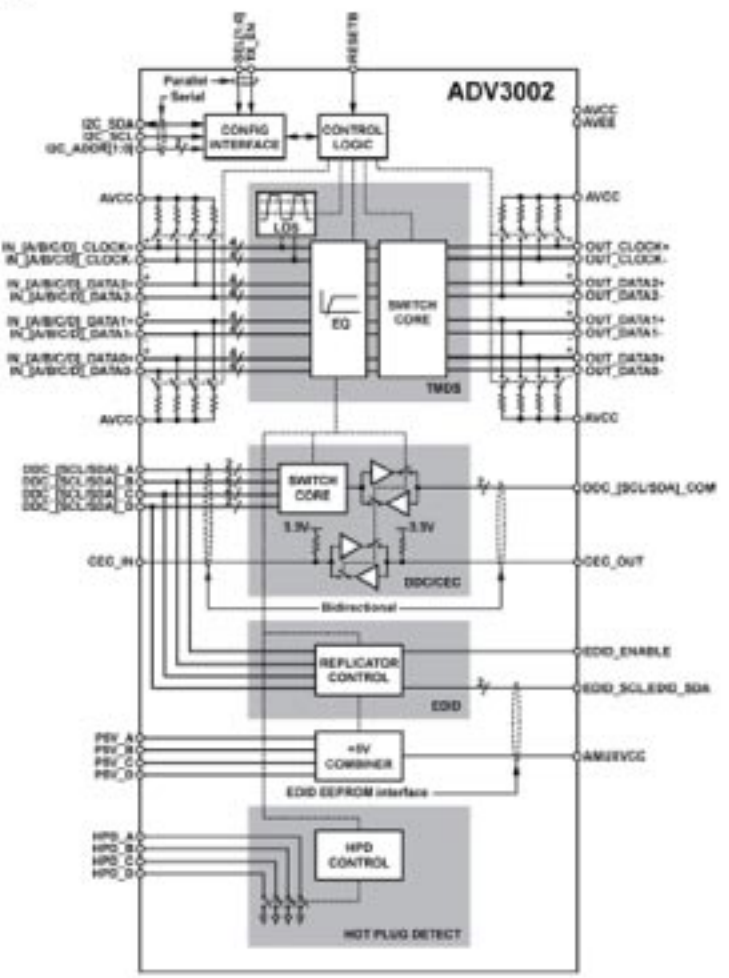

AD8195ACPZ (HDMI : U1201)

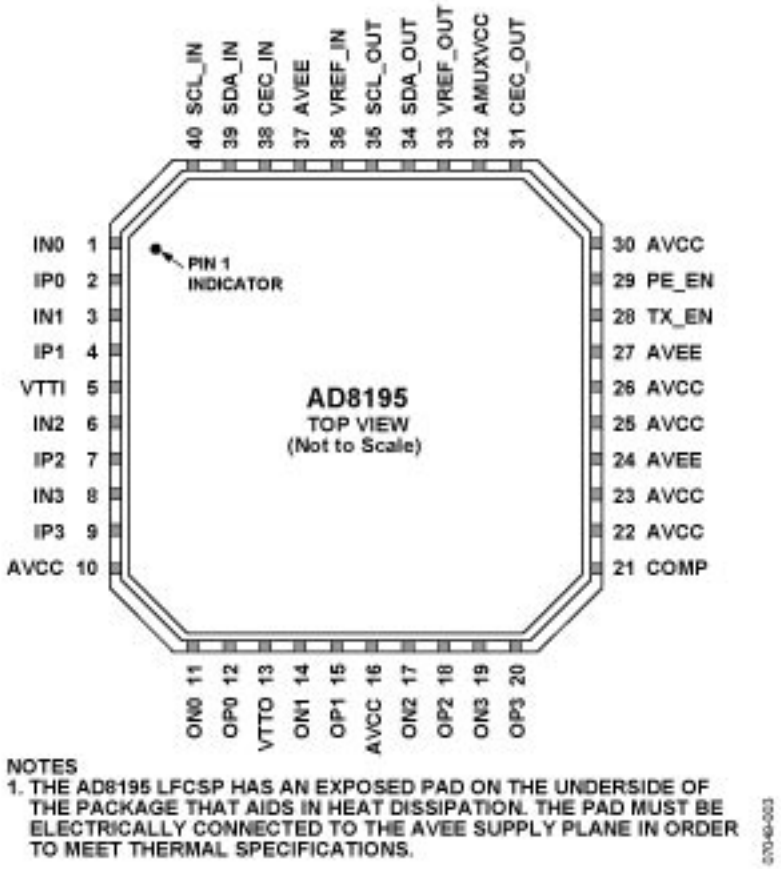

NOTES
1. THE AD8195 LFCSP HAS AN EXPOSED PAD ON THE UNDERSIDE OF THE PACKAGE THAT AIDS IN HEAT DISSIPATION. THE PAD MUST BE ELECTRICALLY CONNECTED TO THE AVEE SUPPLY PLANE IN ORDER TO MEET THERMAL SPECIFICATIONS.

AD8195ACPZ Terminl Function

Pin No.	Mnemonic	Type[1]	Description
1	IN0	HS I	High Speed Input Complement.
2	IP0	HS I	High Speed Input.
3	IN1	HS I	High Speed Input Complement.
4	IP1	HS I	High Speed Input.
5	VTTI	Power	Input Termination Supply. Nominally connected to AVCC.
6	IN2	HS I	High Speed Input Complement.
7	IP2	HS I	High Speed Input.
8	IN3	HS I	High Speed Input Complement.
9	IP3	HS I	High Speed Input.
10, 16, 22, 23, 25, 26, 30	AVCC	Power	Positive Analog Supply. 3.3 V nominal.
11	ON0	HS O	High Speed Output Complement.
12	OP0	HS O	High Speed Output.
13	VTTO	Power	Output Termination Supply. Nominally connected to AVCC.
14	ON1	HS O	High Speed Output Complement.
15	OP1	HS O	High Speed Output.
17	ON2	HS O	High Speed Output Complement.
18	OP2	HS O	High Speed Output.
19	ON3	HS O	High Speed Output Complement.
20	OP3	HS O	High Speed Output.
21	COMP	Control	Power-On Compensation Pin. Bypass to ground through a 10 µF capacitor.
24, 27, 37, Exposed Pad	AVEE	Power	Negative Analog Supply. 0 V nominal.
28	TX_EN	Control	High Speed Output Enable Parallel Interface.
29	PE_EN	Control	High Speed Preemphasis Enable Parallel Interface.
31	CEC_OUT	LS I/O	CEC Output Side.
32	AMUXVCC	Power	Positive Auxiliary Buffer Supply. 5 V nominal.

AD8195ACPZ Block diagram

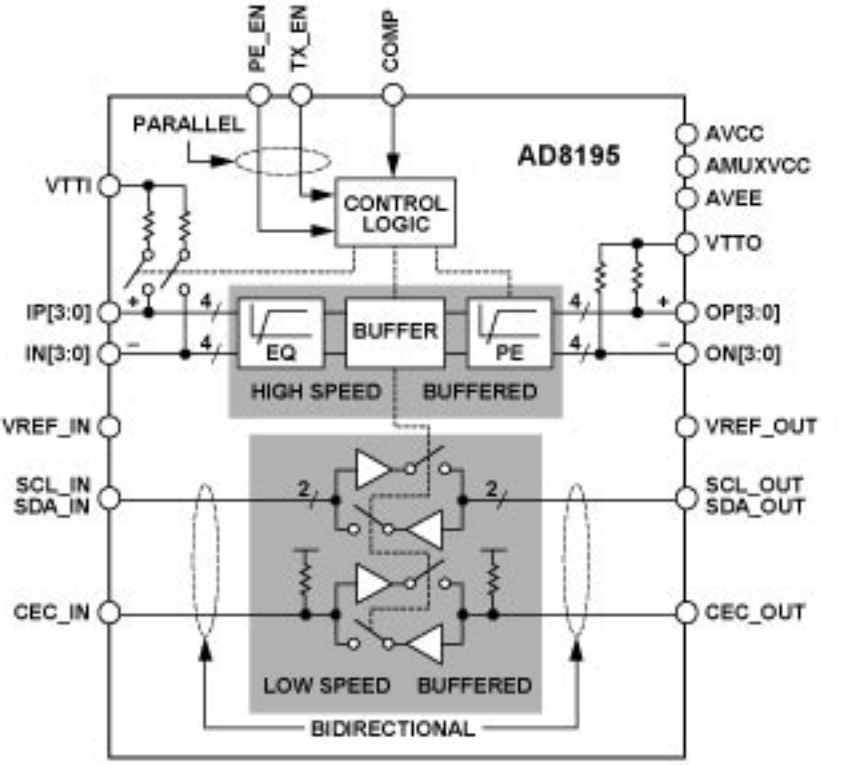

LC89058W-E (HDMI : U2203)

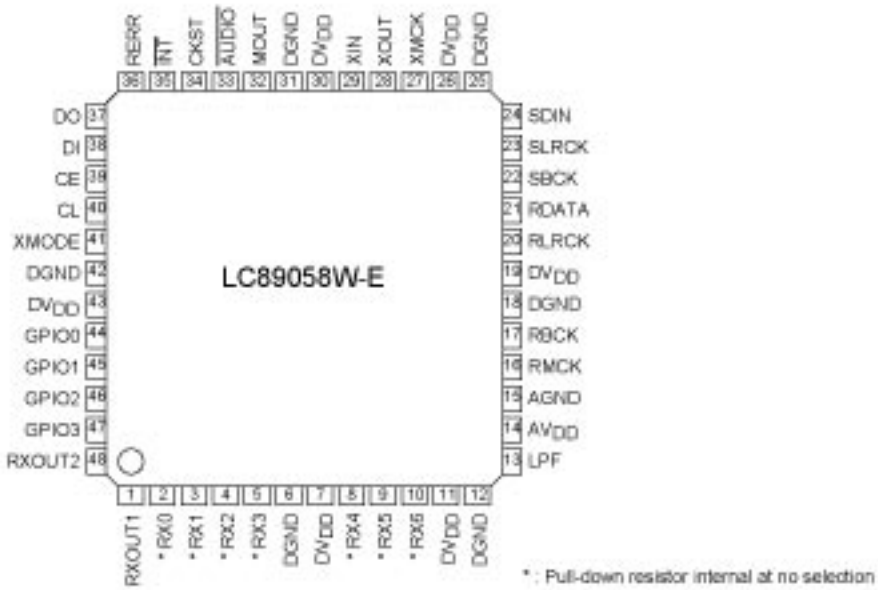

Pin Functions

Pin No.	Name	I/O	Function
1	RXOUT1	O	RX0-6 input S/PDIF through output pin 1
2	RX0	I_{ll}(pd)	5V withstand voltage TTL input level compatible S/PDIF input pin (connected to GND when RX1 is set)
3	RX1	I(pd)	Co-axial compatible S/PDIF input pin (supported demodulation sampling frequency of up to 96kHz)
4	RX2	I_{ll}(pd)	5V withstand voltage TTL input level compatible S/PDIF input pin (connected to GND when RX1 is set)
5	RX3	I_{ll}(pd)	5V withstand voltage TTL input level compatible S/PDIF input pin
6	DGND		Digital GND
7	DV_{DD}		Digital power supply (3.3V)
8	RX4	I_{ll}(pd)	5V tolerable TTL input level compatible S/PDIF input pin
9	RX5	I_{ll}(pd)	5V tolerable TTL input level compatible S/PDIF input pin
10	RX6	I_{ll}(pd)	5V tolerable TTL input level compatible S/PDIF input pin
11	DV_{DD}		Digital power supply (3.3V)
12	DGND		Digital GND
13	LPF	O	PLL loop filter connection pin
14	AV_{DD}		Analog power supply (3.3V)
15	AGND		Analog GND
16	RMCK	O	R system clock output pin (VCO, 512fs, XIN)
17	RBCK	O/I	R system bit clock I/O pin (64fs)
18	DGND		Digital GND
19	DV_{DD}		Digital power supply (3.3V)
20	RLRCK	O/I	R system LR clock I/O pin (fs)
21	RDATA	O	Serial audio data output pin
22	SBCK	O	S system bit clock output pin (16fs, 32fs, 64fs, 128fs)
23	SLRCK	O	S system LR clock output pin (fs/4, fs/2, fs, 2fs)
24	SDIN	I_h	External serial audio data input pin

Pin No.	Name	I/O	Function
25	DGND		Digital GND
26	DV_{DD}		Digital power supply (3.3V)
27	XMCK	O	Oscillation amplifier clock output pin
28	XOUT	O	Output pin connected to the resonator
29	XIN	I	External clock input pin, connected to the resonator (12.288MHz/24.576MHz)
30	DV_{DD}		Digital power supply
31	DGND		Digital GND
32	MOUT	I/O	Emphasis information || Input fs monitor output || Chip address setting input pin
33	$\overline{AUDIO}$	I/O	Channel status bit 1 output || Chip address setting input pin
34	CKST	I/O	Clock switching transition period signal output || Master/slave setting input pin
35	$\overline{INT}$	I/O	Microcontroller interrupt signal output || Pins44-48 I/O setting input pin
36	RERR	O	PLL lock error, data error flag output pin
37	DO	O	CCB microcontroller I/F, read data output pin (3-state)
38	DI	I_5	CCB microcontroller I/F, write data input pin
39	CE	I_5	CCB microcontroller I/F, chip enable input pin
40	CL	I_5	CCB microcontroller I/F, clock input pin
41	XMODE	I_5	System reset input pin
42	DGND		Digital GND
43	DV_{DD}		Digital power supply (3.3V)
44	GPIO0	O/I	General-purpose I/O pin || Selector input pin (output referred to RDATA pin)
45	GPIO1	O/I	General-purpose I/O pin || Selector input pin (output referred to RLRCK pin)
46	GPIO2	O/I	General-purpose I/O pin || Selector input pin (output referred to RBCK pin)
47	GPIO3	O/I	General-purpose I/O pin || Selector input pin (output referred to RMCK pin)
48	RXOUT2	O	RX0-6 input S/PDIF through output pin 2

* Input voltage: I= -0.3 to 3.6V, I_5 = -0.3 to 5.5V
* Output voltage: O= -0.3 to 3.6V
* Pins 2, 4, 5, 8, 9, 10, 24, 38, 39, 40, and 41 have an internal pull-down resistor (pd).
  Their level is fixed when they are unselected.
* Pins 32 and 33 are input pins for chip address setting when pin 41 is held at the low level.
* Pin 34 serves as the input pin for designating as the master or slave when pin 41 is held at the low level.
* Pin 35 serves as the input pin for configuring the I/O of pins 44 to 47 when pin 41 is held at the low level.
* The DV_{DD} and AV_{DD} pins must be held at the same level and turned on and off at the same timing to preclude Latch-up conditions.

LC89058W-E Block diagram

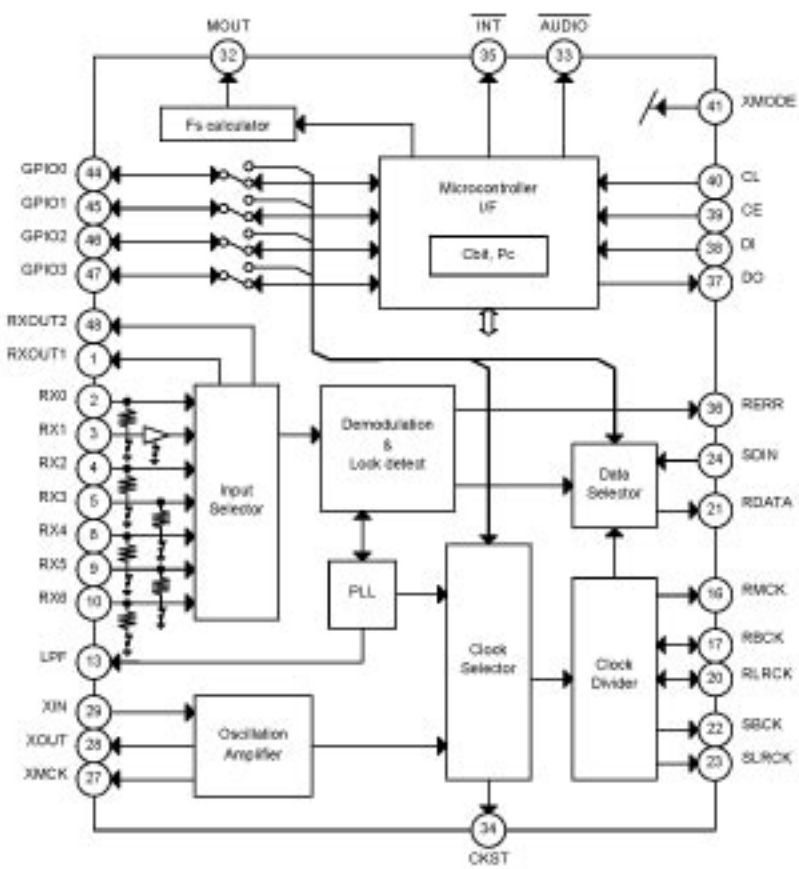

ADSP21487KSWZ3B (HDMI : U2001)

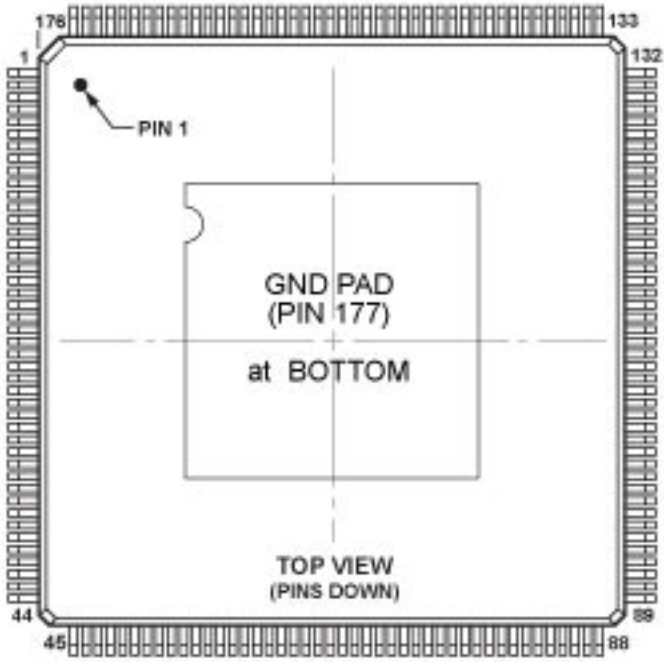

ADSP21487KSWZ3B Terminal Function

Pin Name	Pin No.	Pin Name	Pin No.	Pin Name	Pin No.	Pin Name	Pin No.
SDDQM	1	V_{DD_SIT}	45	DAI_P10	89	V_{DD_INT}	133
MS5	2	DPI_P08	46	V_{DD_INT}	90	FLAG0	134
SDCKE	3	DPI_P07	47	V_{DD_EXT}	91	FLAG1	135
V_{DD_INT}	4	V_{DD_INT}	48	DAI_P20	92	FLAG2	136
CLK_CFG1	5	DPI_P09	49	V_{DD_INT}	93	NC	137
ADDR0	6	DPI_P10	50	DAI_P08	94	FLAG3	138
BOOT_CFG0	7	DPI_P11	51	DAI_P14	95	NC	139
V_{DD_EXT}	8	DPI_P12	52	DAI_P04	96	NC	140
ADDR1	9	DPI_P13	53	DAI_P18	97	V_{DD_EXT}	141
ADDR2	10	DPI_P14	54	DAI_P17	98	NC	142
ADDR3	11	DAI_P03	55	DAI_P16	99	V_{DD_INT}	143
ADDR4	12	NC	56	DAI_P12	100	TRST	144
ADDR5	13	V_{DD_SIT}	57	DAI_P15	101	NC	145
BOOT_CFG1	14	NC	58	V_{DD_INT}	102	EMU	146
GND	15	NC	59	DAI_P11	103	DATA0	147
ADDR6	16	NC	60	V_{DD_SIT}	104	DATA1	148
ADDR7	17	NC	61	V_{DD_INT}	105	DATA2	149
NC	18	V_{DD_INT}	62	BOOT_CFG2	106	DATA3	150
NC	19	NC	63	V_{DD_INT}	107	TDO	151
ADDR8	20	NC	64	AMI_ACK	108	DATA4	152
ADDR9	21	V_{DD_INT}	65	GND	109	V_{DD_DDR}	153
CLK_CFG0	22	NC	66	THD_M	110	DATA5	154
V_{DD_INT}	23	NC	67	THD_P	111	DATA6	155
CLKIN	24	V_{DD_INT}	68	V_{DD_THD}	112	V_{DD_INT}	156
XTAL	25	NC	69	V_{DD_INT}	113	DATA7	157
ADDR10	26	WDTRSTO	70	V_{DD_INT}	114	TDI	158
SDA10	27	NC	71	MST	115	SDCLK	159
V_{DD_SIT}	28	V_{DD_SIT}	72	V_{DD_INT}	116	V_{DD_DDR}	160
V_{DD_INT}	29	DAI_P07	73	WDT_CLKO	117	DATA8	161
ADDR11	30	DAI_P13	74	WDT_CLKIN	118	DATA9	162
ADDR12	31	DAI_P19	75	V_{DD_EXT}	119	DATA10	163
ADDR17	32	DAI_P01	76	ADDR23	120	TCK	164
ADDR13	33	DAI_P02	77	ADDR22	121	DATA11	165
V_{DD_INT}	34	V_{DD_INT}	78	ADDR21	122	DATA12	166
ADDR18	35	NC	79	V_{DD_INT}	123	DATA14	167
RESETOUT/RUNRSTIN	36	NC	80	ADDR20	124	DATA13	168
V_{DD_INT}	37	NC	81	ADDR19	125	V_{DD_INT}	169
DPI_P01	38	NC	82	V_{DD_SIT}	126	DATA15	170
DPI_P02	39	NC	83	ADDR16	127	SDWE	171
DPI_P03	40	V_{DD_EXT}	84	ADDR15	128	SDRAS	172
V_{DD_INT}	41	V_{DD_INT}	85	V_{DD_INT}	129	RESET	173
DPI_P05	42	DAI_P06	86	ADDR14	130	TMS	174
DPI_P04	43	DAI_P05	87	AMI_WR	131	SDCAS	175
DPI_P06	44	DAI_P09	88	AMI_RD	132	V_{DD_INT}	176
						GND	177*

* at BOTTOM

W9864G6JH-6 (HDMI : U2002)

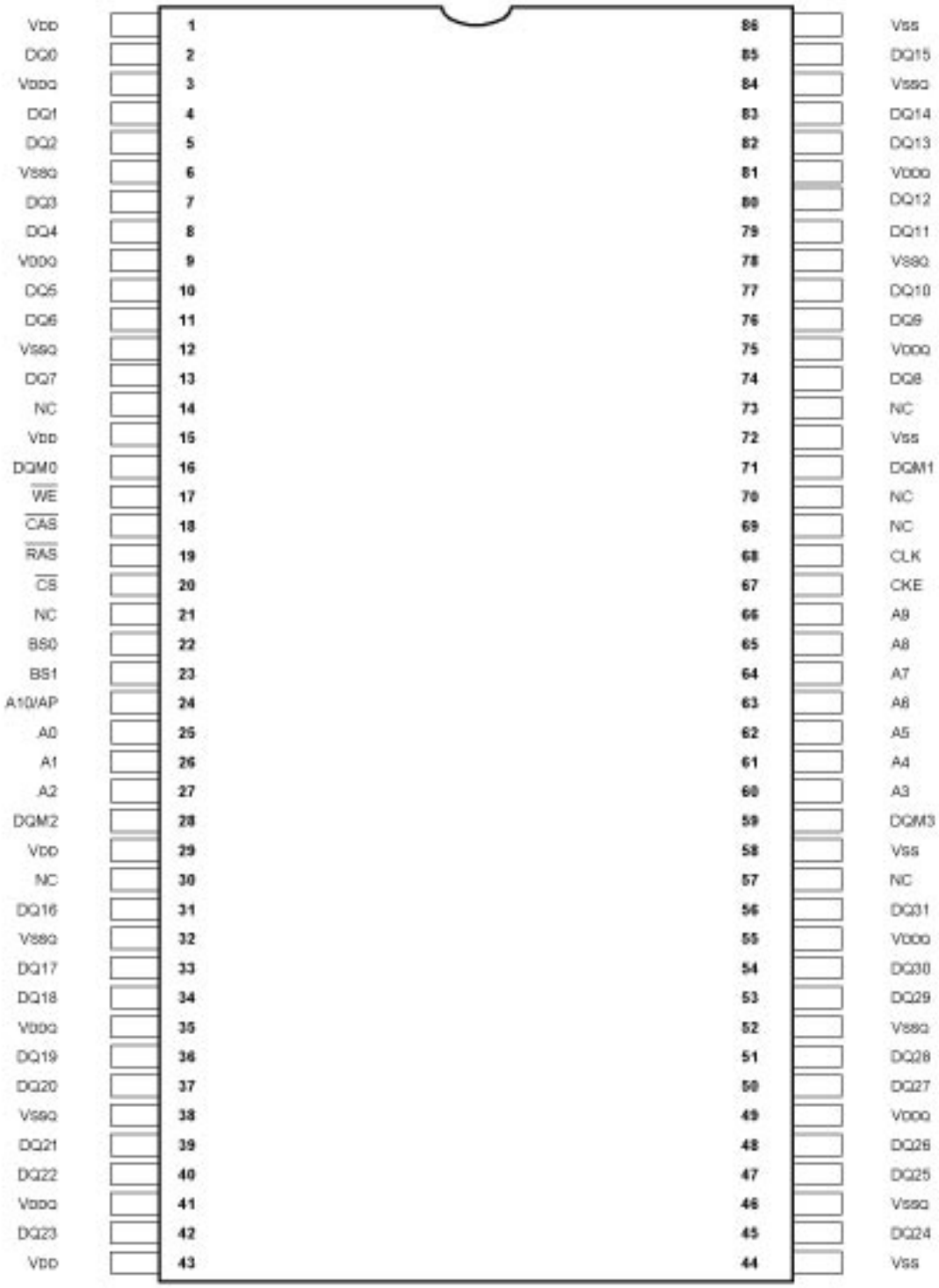

W9864G6JH-6 Pin description

PIN NUMBER	PIN NAME	FUNCTION	DESCRIPTION
24, 25, 26, 27, 60, 61, 62, 63, 64, 65, 66	A0–A10	Address	Multiplexed pins for row and column address. Row address: A0–A10. Column address: A0–A7. A10 is sampled during a precharge command to determine if all banks are to be precharged or bank selected by BS0, BS1.
22, 23	BS0, BS1	Bank Select	Select bank to activate during row address latch time, or bank to read/write during address latch time.
2, 4, 5, 7, 8, 10, 11, 13, 31, 33, 34, 36, 37, 39, 40, 42, 45, 47, 48, 50, 51, 53, 54, 56, 74, 76, 77, 79, 80, 82, 83, 85	DQ0–DQ31	Data Input/ Output	Multiplexed pins for data output and input.
20	$\overline{CS}$	Chip Select	Disable or enable the command decoder. When command decoder is disabled, new command is ignored and previous operation continues.
19	$\overline{RAS}$	Row Address Strobe	Command input. When sampled at the rising edge of the clock $\overline{RAS}$, $\overline{CAS}$ and $\overline{WE}$ define the operation to be executed.
18	$\overline{CAS}$	Column Address Strobe	Referred to $\overline{RAS}$
17	$\overline{WE}$	Write Enable	Referred to $\overline{RAS}$
16, 28, 59, 71	DQM0–DQM3	Input/Output Mask	The output buffer is placed at Hi-Z (with latency of 2) when DQM is sampled high in read cycle. In write cycle, sampling DQM high will block the write operation with zero latency.
68	CLK	Clock Inputs	System clock used to sample inputs on the rising edge of clock.
67	CKE	Clock Enable	CKE controls the clock activation and deactivation. When CKE is low, Power Down mode, Suspend mode, or Self Refresh mode is entered.
1, 15, 29, 43	V_{DD}	Power	Power for input buffers and logic circuit inside DRAM.
44, 58, 72, 86	V_{SS}	Ground	Ground for input buffers and logic circuit inside DRAM.
3, 9, 35, 41, 49, 55, 75, 81	V_{DDQ}	Power for I/O Buffer	Separated power from VDD, to improve DQ noise immunity.
6, 12, 32, 38, 46, 52, 78, 84	V_{SSQ}	Ground for I/O Buffer	Separated ground from VSS, to improve DQ noise immunity.
14, 21, 30, 57, 69, 70, 73	NC	No Connection	No connection.

W9864G6JH-6 Block diagram

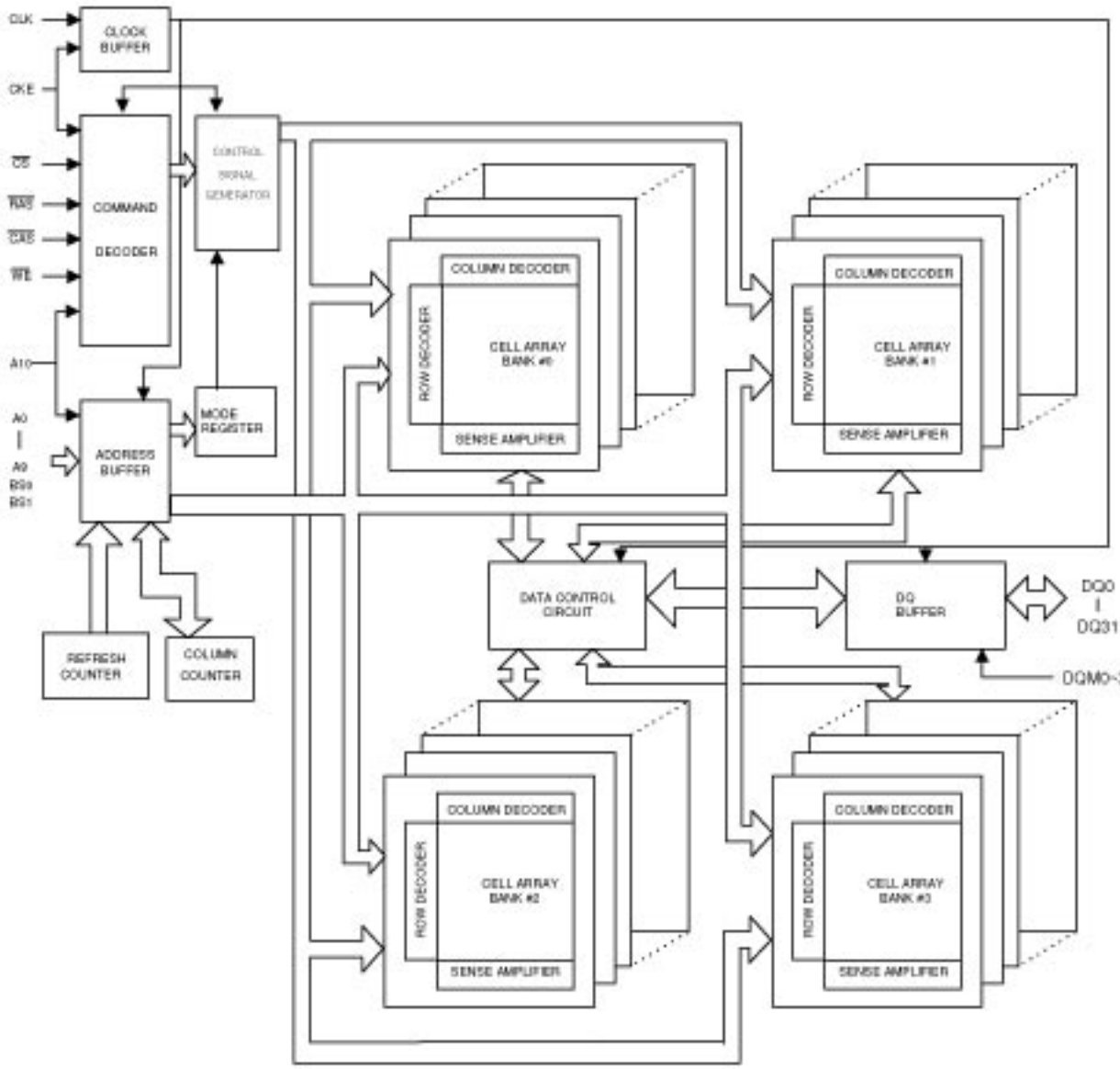

EN29LV160BB-70TIP (HDMI : U2003)

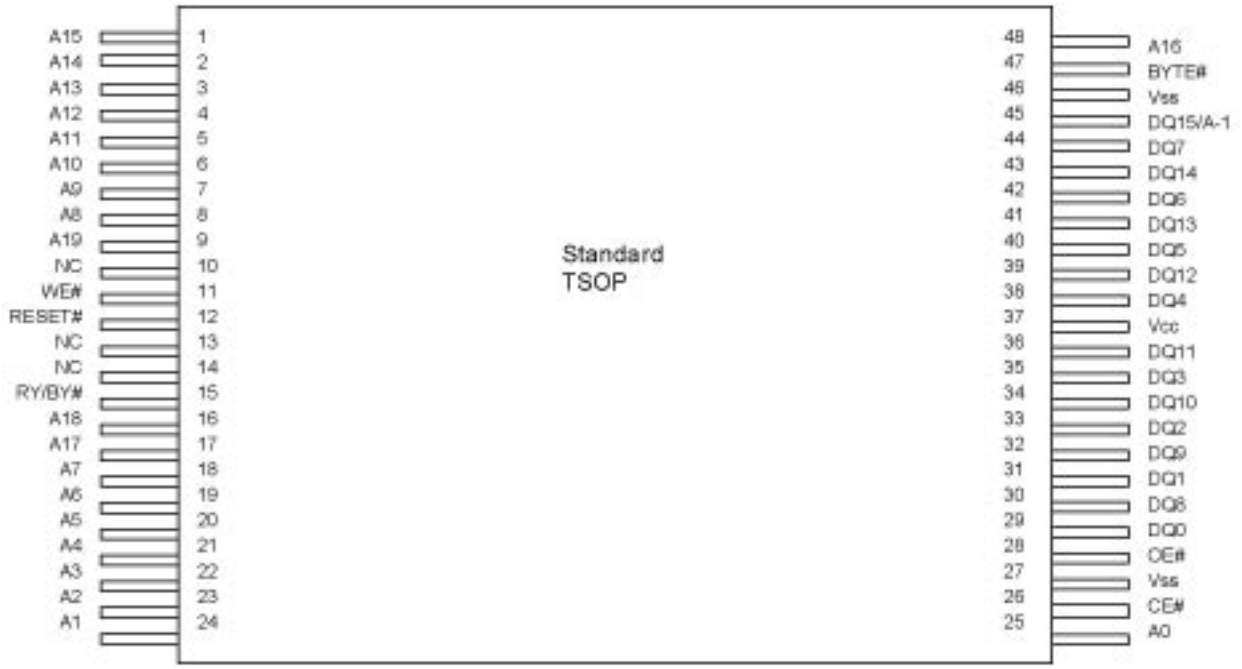

EN29LV160BB-70TIP Block Diagram

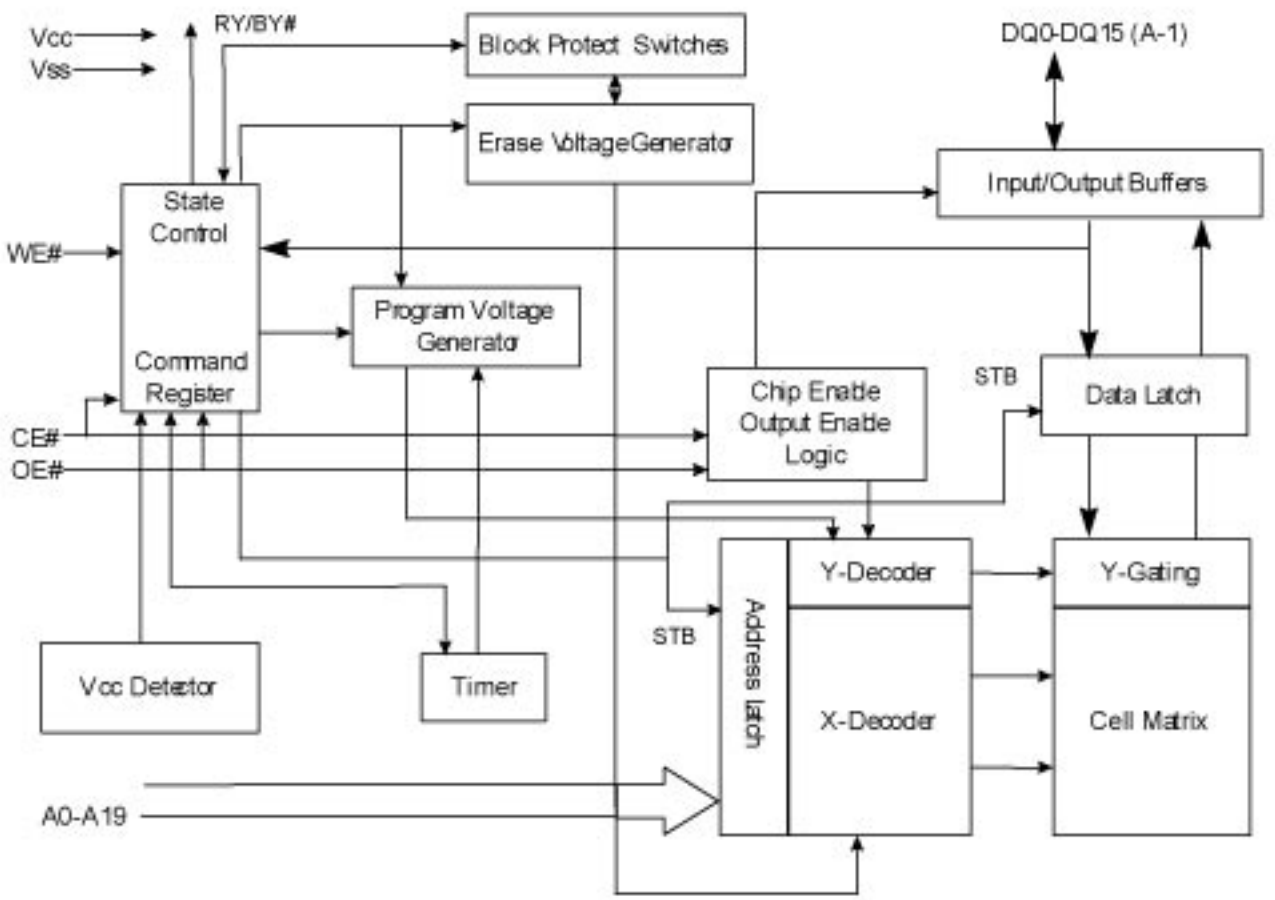

AK5358BET (HDMI : U2403)

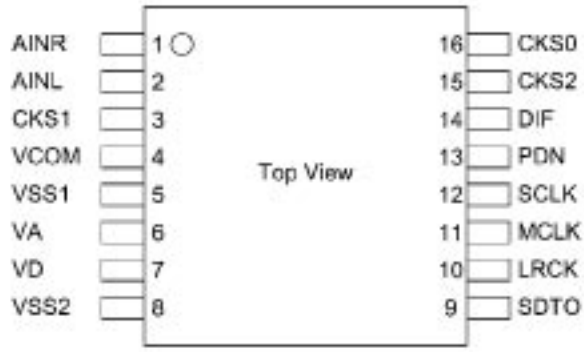

AK5358BET Pin Function

No.	Pin Name	I/O	Function
1	AINR	I	Rch Analog Input Pin
2	AINL	I	Lch Analog Input Pin
3	CKS1	I	Mode Select 1 Pin
4	VCOM	O	Common Voltage Output Pin, VA/2 Bias voltage of ADC input.
5	VSS1	-	Ground Pin
6	VA	-	Analog Power Supply Pin, 4.5 ~ 5.5V
7	VD	-	Digital Power Supply Pin, 2.7 ~ 5.5V
8	VSS2	-	Ground Pin
9	SDTO	O	Audio Serial Data Output Pin "L" Output at Power-down mode.
10	LRCK	I/O	Output Channel Clock Pin "L" Output in Master Mode at Power-down mode.
11	MCLK	I	Master Clock Input Pin
12	SCLK	I/O	Audio Serial Data Clock Pin "L" Output in Master Mode at Power-down mode.
13	PDN	I	Power Down Mode & Reset Pin "H": Power up, "L": Power down & Reset
14	DIF	I	Audio Interface Format Pin "H": 24bit I^2S Compatible, "L": 24bit MSB justified
15	CKS2	I	Mode Select 2 Pin
16	CKS0	I	Mode Select 0 Pin

PCM5100 (HDMI:U2401)

PCM510X (top view)

Table 2. TERMINAL FUNCTIONS, PCM510x

TERMINAL		I/O	DESCRIPTION
NAME	NO.		
CPVDD	1	-	Charge pump power supply, 3.3V
CAPP	2	O	Charge pump flying capacitor terminal for positive rail
CPGND	3	-	Charge pump ground
CAPM	4	O	Charge pump flying capacitor terminal for negative rail
VNEG	5	O	Negative charge pump rail terminal for decoupling, -3.3V
OUTL	6	O	Analog output from DAC left channel
OUTR	7	O	Analog output from DAC right channel
AVDD	8	-	Analog power supply, 3.3V
AGND	9	-	Analog ground
DEMP	10	I	De-emphasis control for 44.1kHz sampling rate(1): Off (Low) / On (High)
FLT	11	I	Filter select : Normal latency (Low) / Low latency (High)
SCK	12	I	System clock input
BCK	13	I	Audio data bit clock input
DIN	14	I	Audio data input
LRCK	15	I	Audio data word clock input
FMT	16	I	Audio format selection : I^2S (Low) / Left justified (High)
XSMT	17	I	Soft mute control : Soft mute (Low) / soft un-mute (High)
LDOO	18	-	Internal logic supply rail terminal for decoupling
DGND	19	-	Digital ground
DVDD	20	-	Digital power supply, 3.3V

(1) Failsafe LVCMOS Schmitt trigger input

PCM5100 Block Diagram

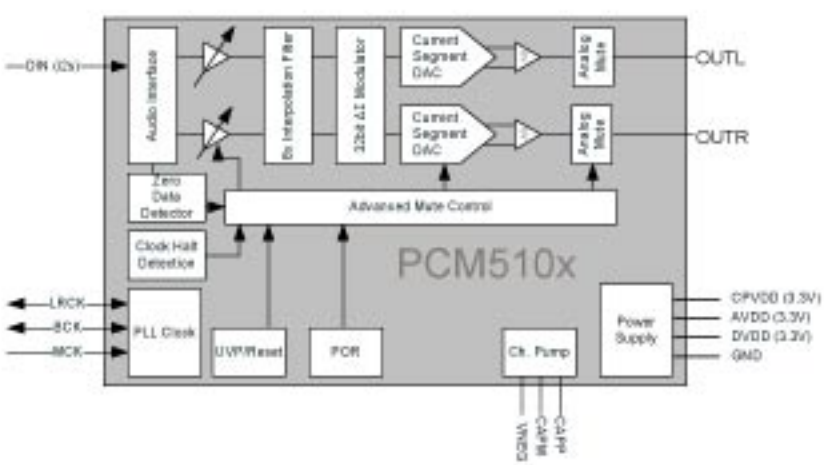

Figure 1. PCM510x Functional Block Diagram

AK4358VQ (HDMI : U2404)

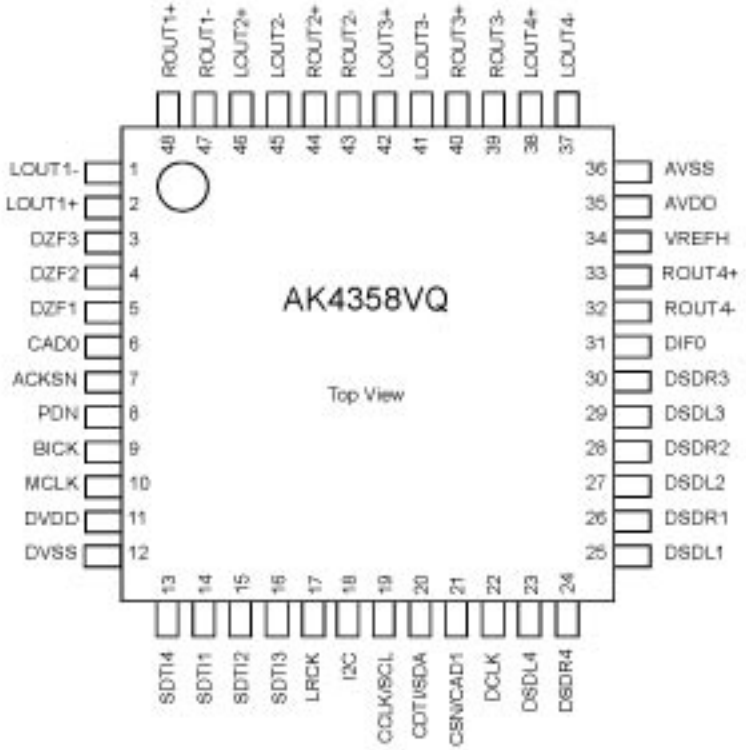

AK4358VQ Pin Function

No.	Pin Name	I/O	Function
1	LOUT1-	O	DAC1 Lch Negative Analog Output Pin
2	LOUT1+	O	DAC1 Lch Positive Analog Output Pin
3	DZF3	O	Zero Input Detect 3 Pin
4	DZF2	O	Zero Input Detect 2 Pin
5	DZF1	O	Zero Input Detect 1 Pin
6	CAD0	I	Chip Address 0 Pin
7	ACKSN	I	Auto Setting Mode Disable Pin (Pull-down Pin) "L": Auto Setting Mode, "H": Manual Setting Mode
8	PDN	I	Power-Down Mode Pin When at "L", the AK4358 is in the power-down mode and is held in reset. The AK4358 should always be reset upon power-up.
9	BICK	I	Audio Serial Data Clock Pin
10	MCLK	I	Master Clock Input Pin An external TTL clock should be input on this pin.
11	DVDD	-	Digital Power Supply Pin, +4.75~+5.25V
12	DVSS	-	Digital Ground Pin
13	SDTI4	I	DAC4 Audio Serial Data Input Pin
14	SDTI1	I	DAC1 Audio Serial Data Input Pin
15	SDTI2	I	DAC2 Audio Serial Data Input Pin
16	SDTI3	I	DAC3 Audio Serial Data Input Pin
17	LRCK	I	L/R Clock Pin
18	I2C	I	Control Mode Select Pin "L": 3-wire Serial, "H": I^2C Bus
19	CCLK/SCL	I	Control Data Clock Pin I2C = "L": CCLK (3-wire Serial), I2C = "H": SCL (I^2C Bus)
20	CDTI/SDA	I/O	Control Data Input Pin I2C = "L": CDTI (3-wire Serial), I2C = "H": SDA (I^2C Bus)
21	CSN/CAD1	I	Chip Select Pin I2C = "L": CSN (3-wire Serial), I2C = "H": CAD1 (I^2C Bus)
22	DCLK	I	DSD Clock Pin
23	DSDL4	I	DAC4 DSD Lch Data Input Pin
24	DSDR4	I	DAC4 DSD Rch Data Input Pin
25	DSDL1	I	DAC1 DSD Lch Data Input Pin
26	DSDR1	I	DAC1 DSD Rch Data Input Pin
27	DSDL2	I	DAC2DSD Lch Data Input Pin
28	DSDR2	I	DAC2 DSD Rch Data Input Pin

29	DSDL3	I	DAC3 DSD Lch Data Input Pin
30	DSDR3	I	DAC3 DSD Rch Data Input Pin
31	DIF0	I	Audio Data Interface Format 0 Pin
32	ROUT4-	O	DAC4 Rch Negative Analog Output Pin
33	ROUT4+	O	DAC4 Rch Positive Analog Output Pin
34	VREFH	I	Positive Voltage Reference Input Pin
35	AVDD	-	Analog Power Supply Pin, +4.75~+5.25V
36	AVSS	-	Analog Ground Pin
37	LOUT4-	O	DAC4 Lch Negative Analog Output Pin
38	LOUT4+	O	DAC4 Lch Positive Analog Output Pin
39	ROUT3-	O	DAC3 Rch Negative Analog Output Pin
40	ROUT3+	O	DAC3 Rch Positive Analog Output Pin
41	LOUT3-	O	DAC3 Lch Negative Analog Output Pin
42	LOUT3+	O	DAC3 Lch Positive Analog Output Pin
43	ROUT2-	O	DAC2 Rch Negative Analog Output Pin
44	ROUT2+	O	DAC2 Rch Positive Analog Output Pin
45	LOUT2-	O	DAC2 Lch Negative Analog Output Pin
46	LOUT2+	O	DAC2 Lch Positive Analog Output Pin
47	ROUT1-	O	DAC1 Rch Negative Analog Output Pin
48	ROUT1+	O	DAC1 Rch Positive Analog Output Pin

Note: All input pins except pull-down pin should not be left floating.

H27U1G8F2BTR-BC (HDMI : U2603)

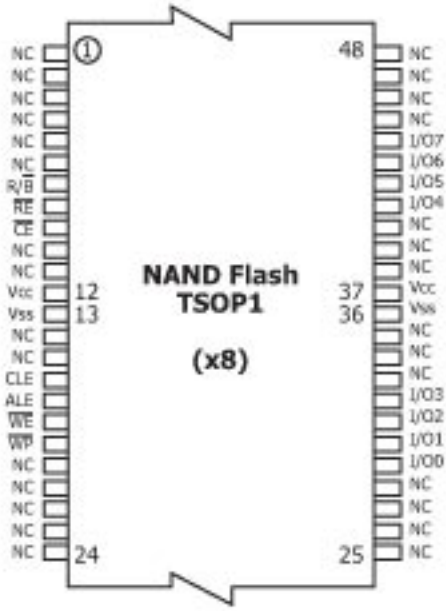

H27U1G8F2BTR-BC Pin Function

Pin Name	Description
IO0 ~ IO7	**DATA INPUTS/OUTPUTS** The IO pins allow to input command, address and data and to output data during read / program operations. The inputs are latched on the rising edge of Write Enable ($\overline{WE}$). The I/O buffer float to High-Z when the device is deselected or the outputs are disabled.
CLE	**COMMAND LATCH ENABLE** This input activates the latching of the IO inputs inside the Command Register on the Rising edge of Write Enable ($\overline{WE}$).
ALE	**ADDRESS LATCH ENABLE** This input activates the latching of the IO inputs inside the Address Register on the Rising edge of Write Enable ($\overline{WE}$).
$\overline{CE}$	**CHIP ENABLE** This input controls the selection of the device.
$\overline{WE}$	**WRITE ENABLE** This input acts as clock to latch Command, Address and Data. The IO inputs are latched on the rise edge of $\overline{WE}$.
$\overline{RE}$	**READ ENABLE** The $\overline{RE}$ input is the serial data-out control, and when active drives the data onto the I/O bus. Data is valid tREA after the falling edge of $\overline{RE}$ which also increments the internal column address counter by one.
$\overline{WP}$	**WRITE PROTECT** The $\overline{WP}$ pin, when Low, provides an Hardware protection against undesired modify (program / erase) operations.
R/$\overline{B}$	**READY BUSY** The Ready/Busy output is an Open Drain pin that signals the state of the memory.
Vcc	**SUPPLY VOLTAGE** The Vcc supplies the power for all the operations (Read, Write, Erase).
Vss	GROUND
NC	NO CONNECTION

H27U1G8F2BTR-BC Block Diagram

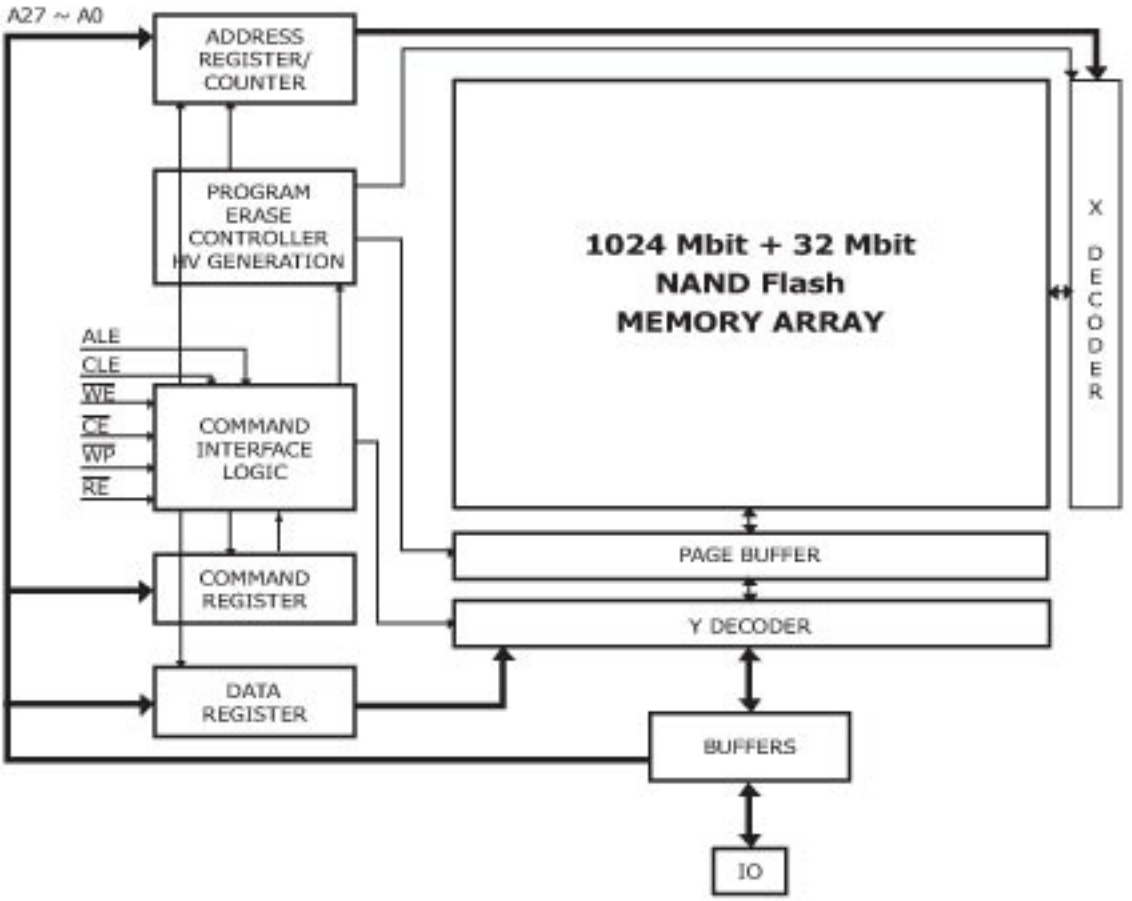

A3V56S30FTP-G6 (HDMI:U2604,2605)

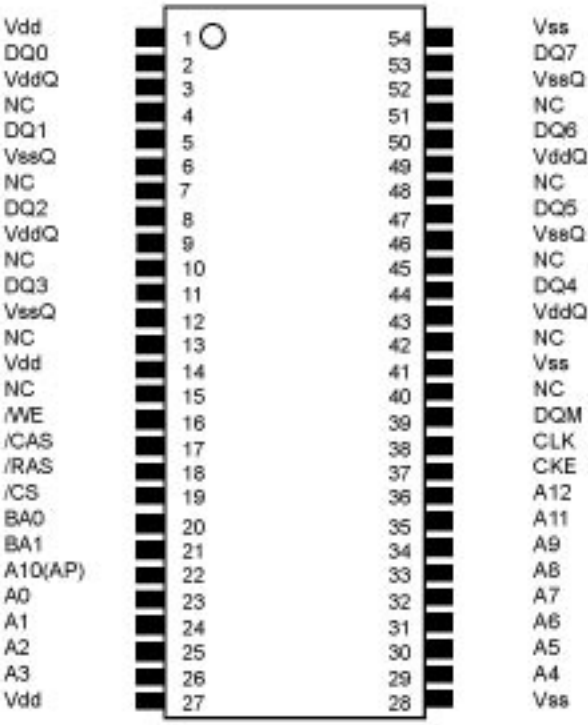

Pin Descriptions

SYMBOL	TYPE	DESCRIPTION
CLK	Input	Clock: CLK is driven by the system clock. All SDRAM input signals are sampled on the positive edge of CLK. CLK also increments the internal burst counter and controls the output registers.
CKE	Input	Clock Enable: CKE activates (HIGH) and deactivates (LOW) the CLK signal. Deactivating the clock provides PRECHARGE POWER-DOWN and SELF REFRESH operation (all banks idle), ACTIVE POWER-DOWN (row active in any bank), or CLOCK SUSPEND operation (burst / access in progress). CKE is synchronous except after the device enters self refresh mode, where CKE becomes asynchronous until after exiting the same mode. The input buffers, including CLK, are disabled during self refresh mode, providing low standby power. CKE may be tied HIGH.
/CS	Input	Chip Select: /CS enables (registered LOW) and disables (registered HIGH) the command decoder. All commands are masked when /CS is registered HIGH. /CS provides for external bank selection on systems with multiple banks. /CS is considered part of the command code.
/CAS, /RAS, /WE	Input	Command Inputs: /CAS, /RAS, and /WE (along with /CS) define the command being entered.
DQM, DQML, DQMU,	Input	Input / Output Mask: DQM is sampled HIGH and is an input mask signal for write accesses and an output disable signal for read accesses. Input data is masked during a WRITE cycle. The output buffers are placed in a High-Z state (two-clock latency) when during a READ cycle. DQM corresponds to DQ0–DQ7 (A3V56S30FTP). DQML corresponds to DQ0–DQ7, DQMU corresponds to DQ8–DQ15 (A3V56S40FTP).
BA0, BA1	Input	Bank Address Input(s): BA0 and BA1 define to which bank the ACTIVE, READ, WRITE or PRECHARGE command is being applied.
A0–A12	Input	A0-12 specify the Row / Column Address in conjunction with BA0,1. The Row Address is specified by A0-12. The Column Address is specified by A0-9(x8) and A0-8(x16). A10 is also used to indicate precharge option. When A10 is high at a read / write command, an auto precharge is performed. When A10 is high at a precharge command, all banks are precharged.
DQ0–DQ15	I/O	Data Input / Output: Data bus.
NC	–	Internally Not Connected: These could be left unconnected, but it is recommended they be connected or Vss.
VddQ	Supply	Data Output Power: Provide isolated power to output buffers for improved noise immunity.
VssQ	Supply	Data Output Ground: Provide isolated ground to output buffers for improved noise immunity.
Vdd	Supply	Power for the input buffers and core logic.
Vss	Supply	Ground for the input buffers and core logic.

A3V56S30FTP-G6 Block Diagram

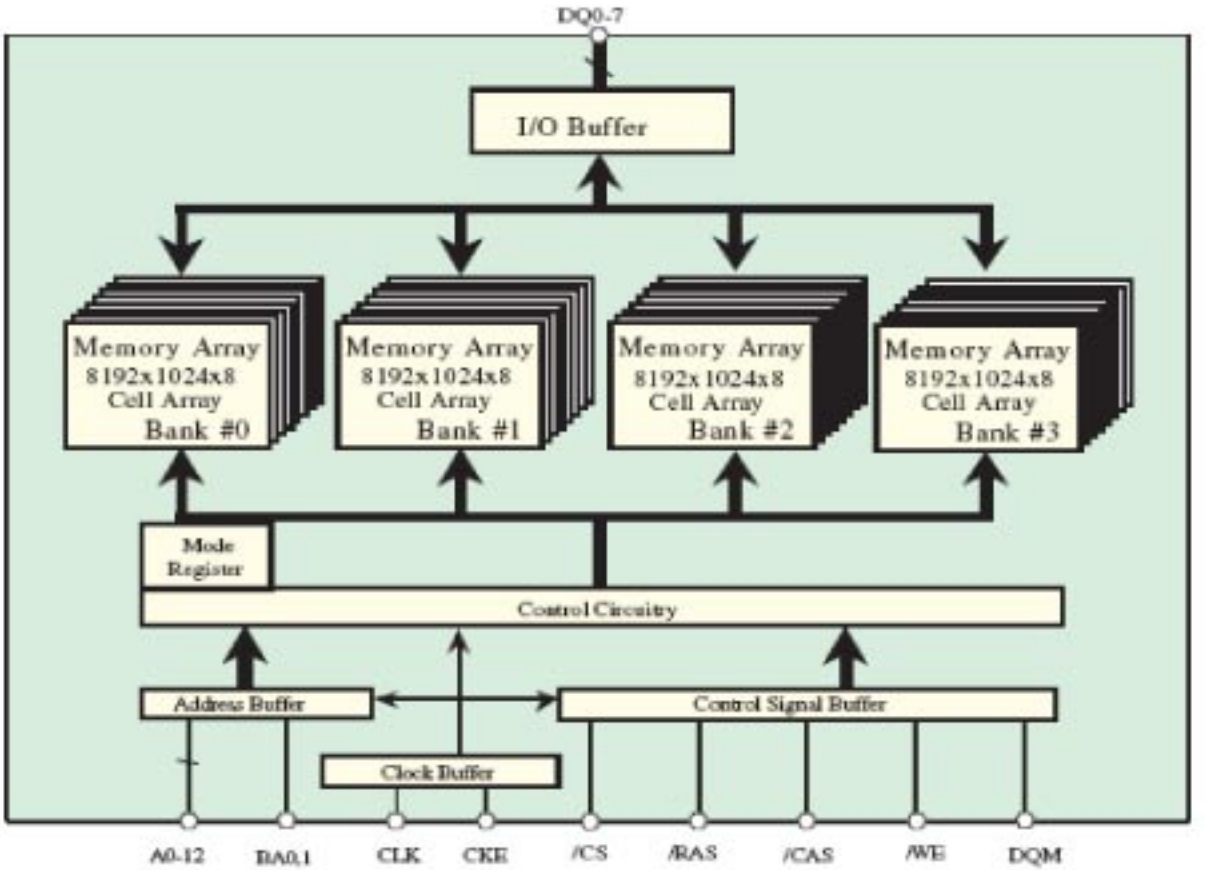

LAN8720A (HDMI:U2802)

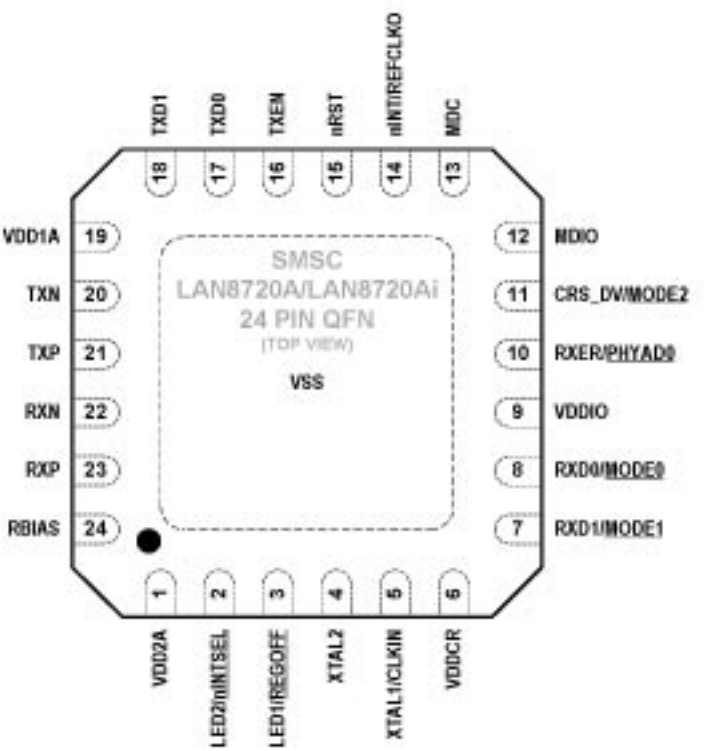

LAN8720A Pin Function

Table 2.8 24-QFN Package Pin Assignments

PIN NUM	PIN NAME	PIN NUM	PIN NAME
1	VDD2A	13	MDC
2	LED2/nINTSEL	14	nINT/REFCLKO
3	LED1/REGOFF	15	nRST
4	XTAL2	16	TXEN
5	XTAL1/CLKIN	17	TXD0
6	VDDCR	18	TXD1
7	RXD1/MODE1	19	VDD1A
8	RXD0/MODE0	20	TXN
9	VDDIO	21	TXP
10	RXER/PHYAD0	22	RXN
11	CRS_DV/MODE2	23	RXP
12	MDIO	24	RBIAS

LAN8720A Block Diagram

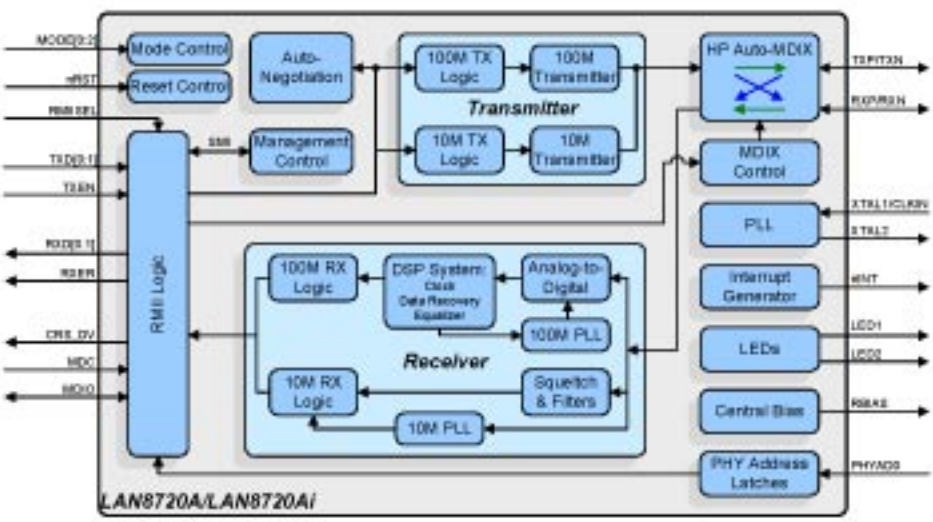

Figure 1.2 Architectural Overview

SAA7121H (HDMI : U2803)

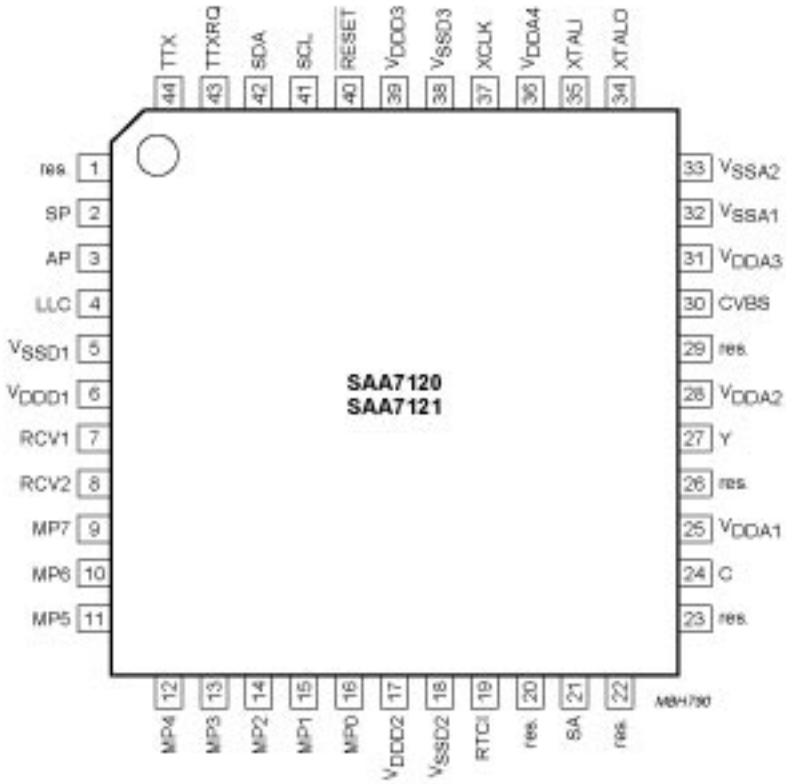

SAA7121H Block Diagram

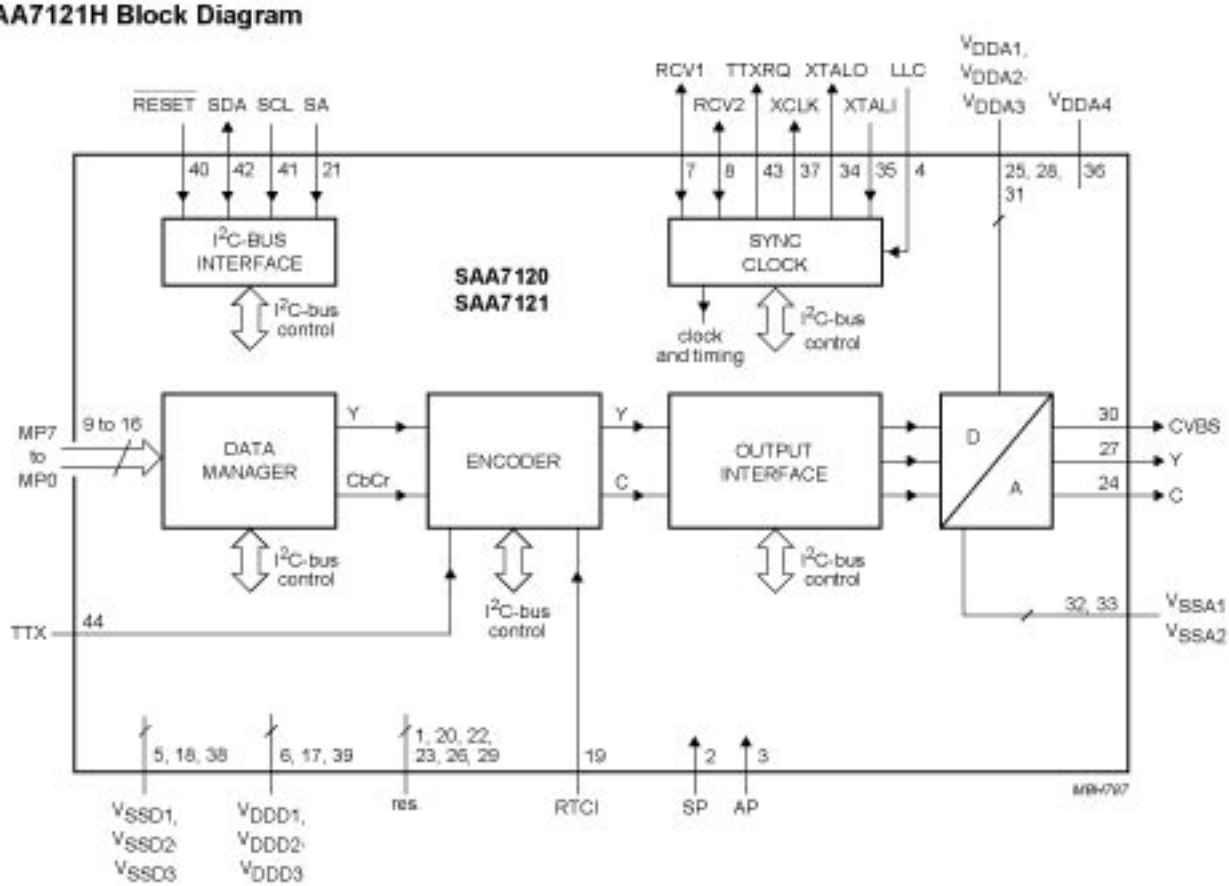

SAA7121H Pin Description

SYMBOL	PIN	I/O	DESCRIPTION
res.	1	–	reserved
SP	2	I	test pin; connected to digital ground for normal operation
AP	3	I	test pin; connected to digital ground for normal operation
LLC	4	I	line-locked clock; this is the 27 MHz master clock for the encoder
V_{SSD1}	5	I	digital ground 1
V_{DDD1}	6	I	digital supply voltage 1
RCV1	7	I/O	raster control 1 for video port; this pin receives/provides a VS/FS/FSEQ signal
RCV2	8	I/O	raster control 2 for video port; this pin provides an HS pulse of programmable length or receives an HS pulse
MP7	9	I	MPEG port; it is an input for *"CCIR 656"* style multiplexed Cb Y, Cr data
MP6	10	I	
MP5	11	I	
MP4	12	I	
MP3	13	I	
MP2	14	I	
MP1	15	I	
MP0	16	I	
V_{DDD2}	17	I	digital supply voltage 2
V_{SSD2}	18	I	digital ground 2
RTCI	19	I	Real Time Control input; if the LLC clock is provided by an SAA7111 or SAA7151B, RTCI should be connected to pin RTCO of the decoder to improve the signal quality
res.	20	–	reserved
SA	21	I	the I^2C-bus slave address select input pin; LOW: slave address = 88H, HIGH = 8CH
res.	22	–	reserved
res.	23	–	reserved
C	24	O	analog output of the chrominance signal
V_{DDA1}	25	I	analog supply voltage 1 for the C DAC
res.	26	–	reserved
Y	27	O	analog output of VBS signal
V_{DDA2}	28	I	analog supply voltage 2 for the Y DAC
res.	29	–	reserved
CVBS	30	O	analog output of the CVBS signal
V_{DDA3}	31	I	analog supply voltage 3 for the CVBS DAC
V_{SSA1}	32	I	analog ground 1 for the DACs
V_{SSA2}	33	I	analog ground 2 for the oscillator and reference voltage
XTALO	34	O	crystal oscillator output (to crystal)
XTALI	35	I	crystal oscillator input (from crystal); if the oscillator is not used, this pin should be connected to ground
V_{DDA4}	36	I	analog supply voltage 4 for the oscillator and reference voltage
XCLK	37	O	clock output of the crystal oscillator

R2A15218FP (INPUT : IC4200)

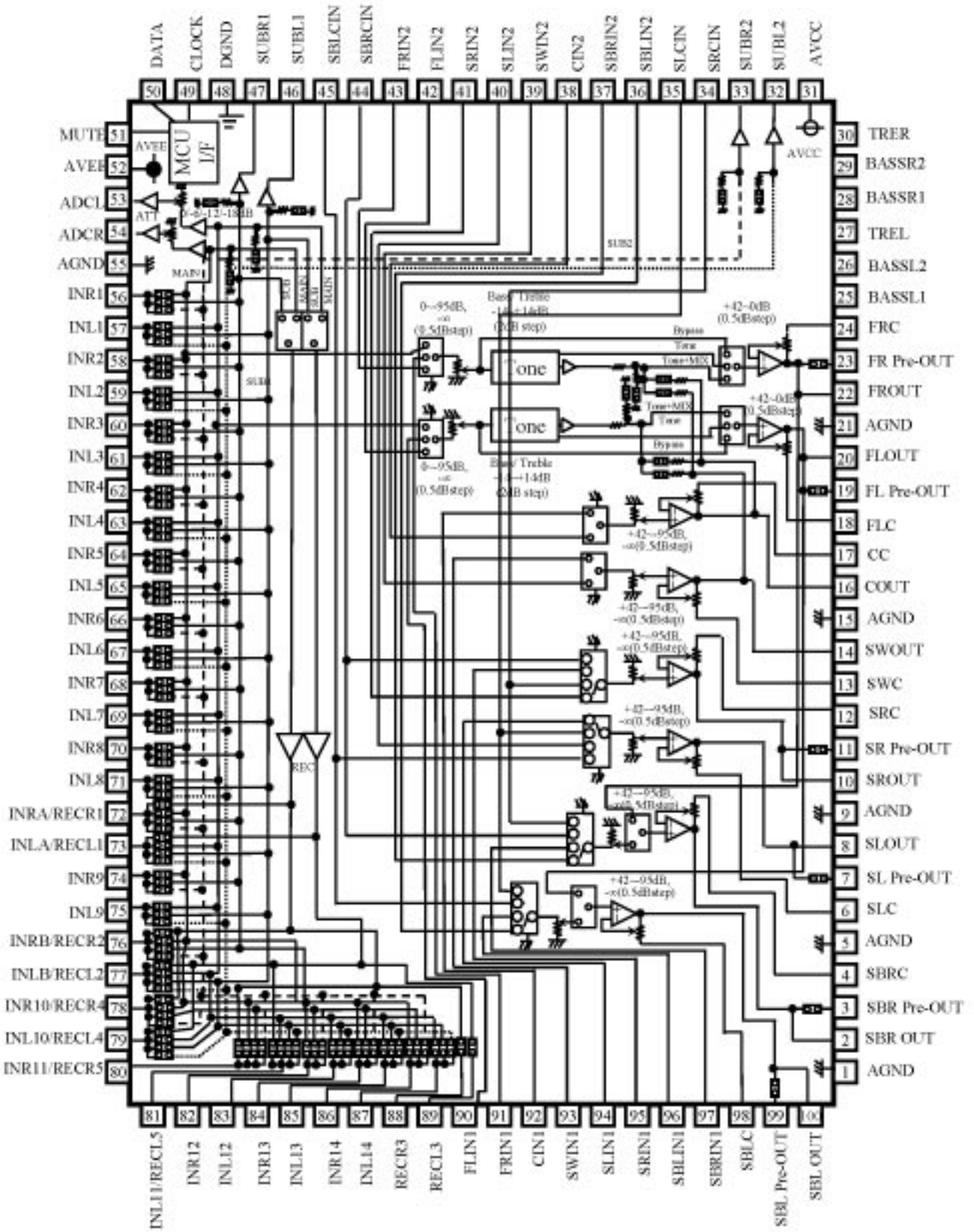

R2A15218FP Pin Function

PIN No.	Name	Function
22,20, 16,14, 10, 8, 2, 100	FROUT,FLOUT, COUT,SWOUT, SROUT, SLOUT, SBROUT,SBLOUT	Output pin of FL/FR/C/SW/SL/SR/SBL/SBR channel
23,19, 11, 7, 3, 99	FR Pre-out,FL Pre-out, SR Pre-out, SL Pre-out, SBR Pre-out,SBL Pre-out	Pre-output pin of FL/FR/SL/SR/SBL/SBR channel
24,18, 17,13, 12, 6, 4, 98	FRC,FLC, CC,SWC, SRC,SLC, SBRC,SBLC	Connects capacitor for reducing click noise of L/R/C/SW/SL/SR/SBL/SBR channel volume
1,5,9,15, 21,55,98	AGND	Analog ground of internal circuit
27,30	TREL, TRER	Frequency characteristic setting pin of L/R channel tone control (Treble)
25,26, 28,29	BASSL1,BASSL2 BASSR1,BASSR2	Frequency characteristic setting pin of L/R channel tone control (Bass)
31	AVCC	Positive power supply to internal circuit
43,42, 41,40, 39,38, 37,36	FRIN2, FLIN2, SRN2,SLIN2, SWIN2,CIN2, SBRIN2,SBLIN2	Multi Input pin of L/R/C/SW/SL/SR/SBL/SBR channel (Multi IN 1/2)
90,91, 92,93, 94,95, 96,97	FLIN1, FRIN1, CIN1,SWIN1, SLIN1,SRIN1, SBLIN1,SBRIN1	
48	DGND	Digital ground of internal circuit
49	DATA	Input pin of control data
50	CLOCK	Input pin of control clock
52	AVEE	Negative power supply to internal circuit
57,59,61,63, 65,67,69,71, 75,83,85,87	INL1,INL2, INL3,INL4, INL5,INL6,INL7,INL8, INL9,INL12,INL13,INL14	Input pin of L/R channel (Input Selector)
56,58,60,62, 64,6668,70, 74,82,84,86	INR1,INR2, INR3,INR4, INR5,INR6,INR7,INR8, INR9,INR12,INR13,INR14	
51	MUTE	Outside Mute Control PIN
44,45 34,35	SBRCIN,SBLCIN SRCIN,SLCIN	3rd Multi Input pin for SBL/SBR/SL/SR channel Volume that is able to swap SBR/SBL with SR/SL
46,47 33,32	SUBL1,SUBR1 SUBL2,SUBR2	Output pin for L/R channel SUB1/SUB2 Output
53,54	ADCL, ADCR	Output pin for L/R channel ADC
88,89	RECR3,RECL3	Output pin for L/R channel REC Output
72,73, 76,77, 78,79 80,81	INRA/RECR1,INLA/RECL1, INRB/RECR2,INLB/RECL2, INR10/RECR4,INL10/RECL4, INR11/RECR5,INL11/RECL5	Input pin of L/R channel (Input Selector)/ Output pin for L/R channel REC Output

NJM2586AM (VIDEO : IC5002)

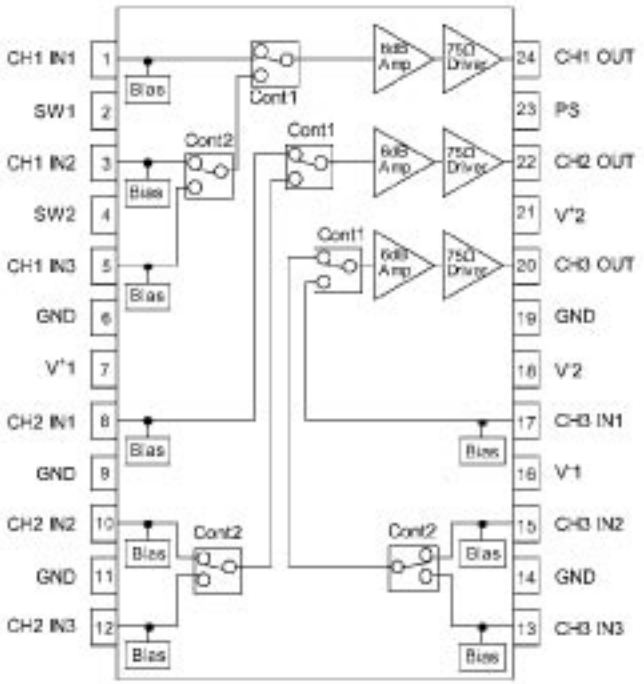

2. FL DISPLAY

FLD (GP1261AI) (FRONT : FLT4400)

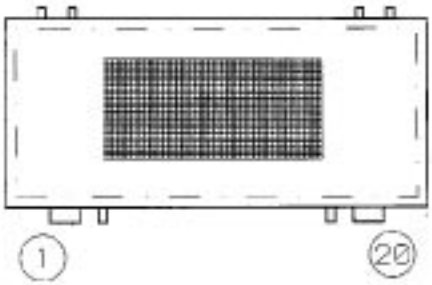

PIN CONNECTION

PIN NO.	1	2	3	4	5	6	7	8	9	10	11	12	13	14	15	16	17	18	19	20
CONNECTION	F-P	NC	NC	NC	NC	NC	TEST	FILTER	SEGMENT	DOT	CLOCK	CS	DIO	NC	VH	PGND	LGND	VDD	DSC	F+

NOTE
1) F-,F+ --- Filament
2) NP ------ No pin
3) DL ------ Datum Line
4) VDD ----- Logic Voltage Supply pin
5) LGND ---- Logic GND pin
6) PGND ---- Power GND pin
7) VH ------ High Voltage Supply pin
8) OSC ----- Pin for self-oscillation
9) CS ------ Chip Select Input pin
10) CLK ----- Shift Register Clock
11) DIO ------- Serial Data Input
12) RESET --- Reset Input
13) INT ---- Int pin
14) TEST --- Test pin
15) Solder composition is Sn-3Ag-0.5Cu.
16) NC ------ No connection
(NC pin should be electrically open on the PC board)

PATTERN DETAIL

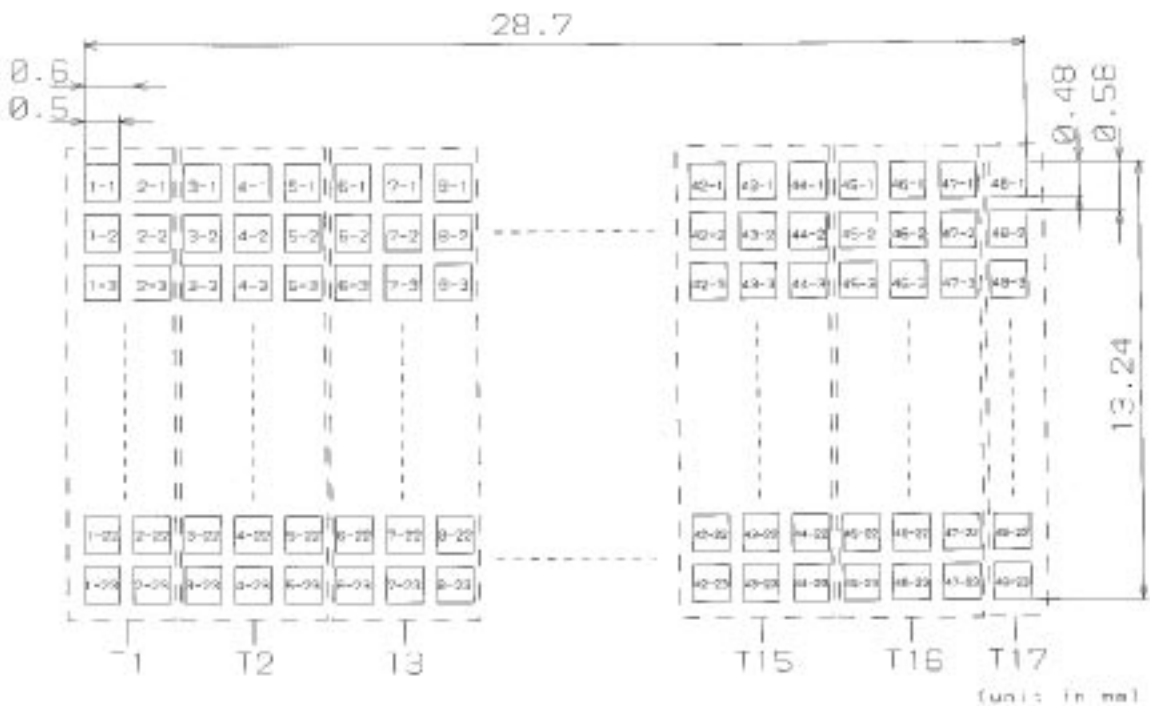

COLOR OF ILLUMINATION
Green (G, x=0.24,y=0.41) - - AOK graphics.

PARTS LIST OF PCB UNIT

*Parts indicated by "nsp" on this table cannot be supplied.
*The parts listed below are only for maintenance. Therefore they might differ from the parts used in the unit in appearances or dimensions.

NOTE: The symbols in the column "Remarks" indicate the following destinations.

U1B : U.S.A. & Canada model N1B : Europe model K1B : China model
BK : Black model SP : Premium Silver model

7CH_AMP PCB UNIT ASS'Y

	Ref. No.	Part No.	Part Name		Remarks	Q'ty	New
SEMICONDUCTORS GROUP							
	Q401,402	00D2710314903	TR 2SA KTA1024Y	J5001024Y0050S			
	Q403	00D2710318909	TR 2SA 2N5401S	J520254010010S			
	Q405	00D2710318909	TR 2SA 2N5401S	J520254010010S			
	Q406	00D2730479909	TR 2SC 2N5551S	J522255510010S			
	Q407,408	00D9600196205	TR 2SA KSA992F	J5000992F0050S			
	Q411,412	00D2730471907	TR 2SC KTC3206Y	J5023206Y0050S			
	Q413,414	00D2710314903	TR 2SA KTA1024Y	J5001024Y0050S			
	Q415	00D2710318909	TR 2SA 2N5401S	J520254010010S			
	Q418	00D2730479909	TR 2SC 2N5551S	J522255510010S			
	Q419,420	00D9600196205	TR 2SA KSA992F	J5000992F0050S			
	Q423,424	00D2730471907	TR 2SC KTC3206Y	J5023206Y0050S			
	Q425,426	00D2710314903	TR 2SA KTA1024Y	J5001024Y0050S			
	Q427	00D2710318909	TR 2SA 2N5401S	J520254010010S			
	Q430	00D2730479909	TR 2SC 2N5551S	J522255510010S			
	Q431,432	00D9600196205	TR 2SA KSA992F	J5000992F0050S			
	Q435,436	00D2730471907	TR 2SC KTC3206Y	J5023206Y0050S			
	Q437,438	00D2710314903	TR 2SA KTA1024Y	J5001024Y0050S			
	Q439	00D2710318909	TR 2SA 2N5401S	J520254010010S			
	Q442	00D2730479909	TR 2SC 2N5551S	J522255510010S			
	Q443,444	00D9600196205	TR 2SA KSA992F	J5000992F0050S			
	Q447,448	00D2730471907	TR 2SC KTC3206Y	J5023206Y0050S			
	Q449,450	00D2710314903	TR 2SA KTA1024Y	J5001024Y0050S			
	Q451	00D2710318909	TR 2SA 2N5401S	J520254010010S			
	Q454	00D2730479909	TR 2SC 2N5551S	J522255510010S			
	Q455,456	00D9600196205	TR 2SA KSA992F	J5000992F0050S			
	Q459,460	00D2730471907	TR 2SC KTC3206Y	J5023206Y0050S			
	Q461,462	00D2710314903	TR 2SA KTA1024Y	J5001024Y0050S			
	Q463	00D2710318909	TR 2SA 2N5401S	J520254010010S			
	Q466	00D2730479909	TR 2SC 2N5551S	J522255510010S			
	Q467,468	00D9600196205	TR 2SA KSA992F	J5000992F0050S			
	Q471,472	00D2730471907	TR 2SC KTC3206Y	J5023206Y0050S			
	Q473,474	00D2710314903	TR 2SA KTA1024Y	J5001024Y0050S			
	Q475	00D2710318909	TR 2SA 2N5401S	J520254010010S			
	Q478	00D2730479909	TR 2SC 2N5551S	J522255510010S			
	Q479,480	00D9600196205	TR 2SA KSA992F	J5000992F0050S			
	Q483,484	00D2730471907	TR 2SC KTC3206Y	J5023206Y0050S			
	D401-442	00D2760401905	D,SWITCHING 1SS133T	K000013300520S			
	D457,458	963201500170D	D,SWITCHING CHIP LBAS16HT1G FAST	K005041480230S			
	ZD401	963202500300D	D,ZENER ZJ5.1A-0.5W	K06005R134522S			
	ZD402,403	963202500410S	D,ZENER ZJ4.7B-0.5W	K06004R744522S			
	ZD404	963202500300D	D,ZENER ZJ5.1A-0.5W	K06005R134522S			
	ZD405,406	963202500410S	D,ZENER ZJ4.7B-0.5W	K06004R744522S			

	Ref. No.	Part No.	Part Name		Remarks	Q'ty	New
	ZD407	963202500300D	D,ZENER ZJ5.1A-0.5W	K06005R134522S			
	ZD408,409	963202500410S	D,ZENER ZJ4.7B-0.5W	K06004R744522S			
	ZD410	963202500300D	D,ZENER ZJ5.1A-0.5W	K06005R134522S			
	ZD411,412	963202500410S	D,ZENER ZJ4.7B-0.5W	K06004R744522S			
	ZD413	963202500300D	D,ZENER ZJ5.1A-0.5W	K06005R134522S			
	ZD414,415	963202500410S	D,ZENER ZJ4.7B-0.5W	K06004R744522S			
	ZD416	963202500300D	D,ZENER ZJ5.1A-0.5W	K06005R134522S			
	ZD417,418	963202500410S	D,ZENER ZJ4.7B-0.5W	K06004R744522S			
	ZD419	963202500300D	D,ZENER ZJ5.1A-0.5W	K06005R134522S			
	ZD420,421	963202500410S	D,ZENER ZJ4.7B-0.5W	K06004R744522S			
RESISTORS GROUP							
	R403	nsp	R,METAL FILM 270-J,1W	C060027165060S	FLAME RETARDANT		
	R405	nsp	R,METAL FILM 270-J,1W	C060027165060S	FLAME RETARDANT		
	R406	963252100150S	POSISTOR DHPTHF1608 471P 115T	F320471001150S			
	R415	963125012630S	R,METAL FILM 22-J,1W	C060022065050S	FLAME RETARDANT		
	R418	963125010690S	R,METAL FILM 15K-J,2W	C060015366050S			
	R424,425	00D9630345903	R,FIXED 2WJ-0.47	N1131366478205	FLAME RETARDANT		
	R430,431	00D9630345903	R,FIXED 2WJ-0.47	N1131366478205	FLAME RETARDANT		
	R434	nsp	R,METAL FILM 3.3K-J,1W	C060033265050S			
	R439	963125012630S	R,METAL FILM 22-J,1W	C060022065050S	FLAME RETARDANT		
	R441,442	nsp	R,METAL FILM 1K-J,1W	C060010265050S			
	R443	nsp	R,METAL FILM 270-J,1W	C060027165060S	FLAME RETARDANT		
	R447,448	nsp	R,METAL FILM 270-J,1W	C060027165060S	FLAME RETARDANT		
	R449	963252100140D	POSISTOR DHPTHF1608 471P 95T	F320471000950S			
	R450	963252100150S	POSISTOR DHPTHF1608 471P 115T	F320471001150S			
	R458	963125012630S	R,METAL FILM 22-J,1W	C060022065050S	FLAME RETARDANT		
	R461	963125010690S	R,METAL FILM 15K-J,2W	C060015366050S			
	R464	963252100140D	POSISTOR DHPTHF1608 471P 95T	F320471000950S			
	R467,468	00D9630345903	R,FIXED 2WJ-0.47	N1131366478205	FLAME RETARDANT		
	R474,475	00D9630345903	R,FIXED 2WJ-0.47	N1131366478205	FLAME RETARDANT		
	R478	nsp	R,METAL FILM 3.3K-J,1W	C060033265050S			
	R483	963125012630S	R,METAL FILM 22-J,1W	C060022065050S	FLAME RETARDANT		
	R485,486	nsp	R,METAL FILM 1K-J,1W	C060010265050S			
	R487	nsp	R,METAL FILM 270-J,1W	C060027165060S	FLAME RETARDANT		
	R491,492	nsp	R,METAL FILM 270-J,1W	C060027165060S	FLAME RETARDANT		
	R494	963252100150S	POSISTOR DHPTHF1608 471P 115T	F320471001150S			
	R502	963125012630S	R,METAL FILM 22-J,1W	C060022065050S	FLAME RETARDANT		
	R505	963125010690S	R,METAL FILM 15K-J,2W	C060015366050S			
	R511,512	00D9630345903	R,FIXED 2WJ-0.47	N1131366478205	FLAME RETARDANT		
	R517,518	00D9630345903	R,FIXED 2WJ-0.47	N1131366478205	FLAME RETARDANT		
	R521	nsp	R,METAL FILM 3.3K-J,1W	C060033265050S			
	R526	963125012630S	R,METAL FILM 22-J,1W	C060022065050S	FLAME RETARDANT		
	R528,529	nsp	R,METAL FILM 1K-J,1W	C060010265050S			
	R530	nsp	R,METAL FILM 270-J,1W	C060027165060S	FLAME RETARDANT		
	R533	nsp	R,METAL FILM 270-J,1W	C060027165060S	FLAME RETARDANT		
	R535	nsp	R,METAL FILM 270-J,1W	C060027165060S	FLAME RETARDANT		
	R537	963252100150S	POSISTOR DHPTHF1608 471P 115T	F320471001150S			
	R545	963125012630S	R,METAL FILM 22-J,1W	C060022065050S	FLAME RETARDANT		
	R548	963125010690S	R,METAL FILM 15K-J,2W	C060015366050S			
	R554,555	00D9630345903	R,FIXED 2WJ-0.47	N1131366478205	FLAME RETARDANT		
	R561,562	00D9630345903	R,FIXED 2WJ-0.47	N1131366478205	FLAME RETARDANT		

	Ref. No.	Part No.	Part Name		Remarks	Q'ty	New
	R564	nsp	R,METAL FILM 3.3K-J,1W	C0600332650505			
	R569	9631250126305	R,METAL FILM 22-J,1W	C0600220650505	FLAME RETARDANT		
	R571,572	nsp	R,METAL FILM 1K-J,1W	C0600102650505			
	R573	nsp	R,METAL FILM 270-J,1W	C0600271650605	FLAME RETARDANT		
	R576	nsp	R,METAL FILM 270-J,1W	C0600271650605	FLAME RETARDANT		
	R578	nsp	R,METAL FILM 270-J,1W	C0600271650605	FLAME RETARDANT		
	R580	9632521001505	POSISTOR DHPTHF1608 471P 115T	F3204710011505			
	R588	9631250126305	R,METAL FILM 22-J,1W	C0600220650505	FLAME RETARDANT		
	R591	9631250106905	R,METAL FILM 15K-J,2W	C0600153660505			
	R597,598	00D9630345903	R,FIXED 2WJ-0.47	N1131366478205	FLAME RETARDANT		
	R603,604	00D9630345903	R,FIXED 2WJ-0.47	N1131366478205	FLAME RETARDANT		
	R607	nsp	R,METAL FILM 3.3K-J,1W	C0600332650505			
	R612	9631250126305	R,METAL FILM 22-J,1W	C0600220650505	FLAME RETARDANT		
	R614,615	nsp	R,METAL FILM 1K-J,1W	C0600102650505			
	R616	nsp	R,METAL FILM 270-J,1W	C0600271650605	FLAME RETARDANT		
	R619	nsp	R,METAL FILM 270-J,1W	C0600271650605	FLAME RETARDANT		
	R621	nsp	R,METAL FILM 270-J,1W	C0600271650605	FLAME RETARDANT		
	R623	9632521001505	POSISTOR DHPTHF1608 471P 115T	F3204710011505			
	R631	9631250126305	R,METAL FILM 22-J,1W	C0600220650505	FLAME RETARDANT		
	R634	9631250106905	R,METAL FILM 15K-J,2W	C0600153660505			
	R640,641	00D9630345903	R,FIXED 2WJ-0.47	N1131366478205	FLAME RETARDANT		
	R646,647	00D9630345903	R,FIXED 2WJ-0.47	N1131366478205	FLAME RETARDANT		
	R650	nsp	R,METAL FILM 3.3K-J,1W	C0600332650505			
	R655	9631250126305	R,METAL FILM 22-J,1W	C0600220650505	FLAME RETARDANT		
	R657,658	nsp	R,METAL FILM 1K-J,1W	C0600102650505			
	R659	nsp	R,METAL FILM 270-J,1W	C0600271650605	FLAME RETARDANT		
	R662	nsp	R,METAL FILM 270-J,1W	C0600271650605	FLAME RETARDANT		
	R664	nsp	R,METAL FILM 270-J,1W	C0600271650605	FLAME RETARDANT		
	R666	9632521001505	POSISTOR DHPTHF1608 471P 115T	F3204710011505			
	R674	9631250126305	R,METAL FILM 22-J,1W	C0600220650505	FLAME RETARDANT		
	R677	9631250106905	R,METAL FILM 15K-J,2W	C0600153660505			
	R683,684	00D9630345903	R,FIXED 2WJ-0.47	N1131366478205	FLAME RETARDANT		
	R689,690	00D9630345903	R,FIXED 2WJ-0.47	N1131366478205	FLAME RETARDANT		
	R694	nsp	R,METAL FILM 3.3K-J,1W	C0600332650505			
	R698	9631250126305	R,METAL FILM 22-J,1W	C0600220650505	FLAME RETARDANT		
	R700,701	nsp	R,METAL FILM 1K-J,1W	C0600102650505			
	R702	nsp	R,METAL FILM 270-J,1W	C0600271650605	FLAME RETARDANT		
	VR401-407	9631610124005	VR,SEMI CARBON EVN-DCAA03B 1KB	C5411023150005			
	CAPACITORS GROUP						
	C401	nsp	C,CERAMIC 0.1UF-K/50V	D0111045771605			
	C403	nsp	C,CERAMIC 0.01UF-K/50V	D0101037771605			
	C405	nsp	C,CERAMIC 220PF-J/50V	D0102211671605			
	C406	nsp	C,CERAMIC SL220PF-J/500V	D00022106D051S			
	C407	00D2544574922	C,ELECT 100UF-M/50V	D0401010870605			
	C408	00D2544573994	C,ELECT 22UF-M/50V	D0402200873305			
	C409	nsp	C,CERAMIC SL220PF-J/500V	D00022106D051S			
	C410	00D2544574922	C,ELECT 100UF-M/50V	D0401010870605			
	C411,412	nsp	C,CERAMIC 470PF-K/500V	D00447127D050S			

	Ref. No.	Part No.	Part Name		Remarks	Q'ty	New
	C413	nsp	C,CERAMIC X7R2200PF-K/50V	D0112227772005			
	C415,416	00D9630234302	C,ELECT 10UF-M/100V	D04010008C050S			
	C418	nsp	C,CERAMIC 0.1UF-K/50V	D011104577160S			
	C421	nsp	C,CERAMIC 220PF-J/50V	D010221167160S			
	C422	nsp	C,CERAMIC SL220PF-J/500V	D00022106D051S			
	C423	00D2544574922	C,ELECT 100UF-M/50V	D0401010870605			
	C424	00D2544573994	C,ELECT 22UF-M/50V	D0402200873305			
	C425	nsp	C,CERAMIC SL220PF-J/500V	D00022106D051S			
	C426	00D2544574922	C,ELECT 100UF-M/50V	D0401010870605			
	C427,428	nsp	C,CERAMIC 470PF-K/500V	D00447127D050S			
	C429	nsp	C,CERAMIC X7R2200PF-K/50V	D0112227772005			
	C431,432	00D9630234302	C,ELECT 10UF-M/100V	D04010008C050S			
	C434	nsp	C,CERAMIC 0.1UF-K/50V	D011104577160S			
	C437	nsp	C,CERAMIC 220PF-J/50V	D010221167160S			
	C438	nsp	C,CERAMIC SL220PF-J/500V	D00022106D051S			
	C439	00D2544574922	C,ELECT 100UF-M/50V	D0401010870605			
	C440	00D2544573994	C,ELECT 22UF-M/50V	D0402200873305			
	C441	nsp	C,CERAMIC SL220PF-J/500V	D00022106D051S			
	C442	00D2544574922	C,ELECT 100UF-M/50V	D0401010870605			
	C443,444	nsp	C,CERAMIC 470PF-K/500V	D00447127D050S			
	C445	nsp	C,CERAMIC X7R2200PF-K/50V	D0112227772005			
	C447,448	00D9630234302	C,ELECT 10UF-M/100V	D04010008C050S			
	C450	nsp	C,CERAMIC 0.1UF-K/50V	D011104577160S			
	C453	nsp	C,CERAMIC 220PF-J/50V	D010221167160S			
	C454	nsp	C,CERAMIC SL220PF-J/500V	D00022106D051S			
	C455	00D2544574919	C,ELECT 47UF-M/50V (Pb Free)	D0404700870705			
	C456	00D9630224503	C,ELECT 22UF-M/50V	D0402200870605			
	C457	nsp	C,CERAMIC SL220PF-J/500V	D00022106D051S			
	C458	00D2544574922	C,ELECT 100UF-M/50V	D0401010870605			
	C459,460	nsp	C,CERAMIC 470PF-K/500V	D00447127D050S			
	C461	nsp	C,CERAMIC X7R2200PF-K/50V	D0112227772005			
	C463,464	00D9630234302	C,ELECT 10UF-M/100V	D04010008C050S			
	C466	nsp	C,CERAMIC 0.1UF-K/50V	D011104577160S			
	C469	nsp	C,CERAMIC 220PF-J/50V	D010221167160S			
	C470	nsp	C,CERAMIC SL220PF-J/500V	D00022106D051S			
	C471	00D2544574919	C,ELECT 47UF-M/50V (Pb Free)	D0404700870705			
	C472	00D9630224503	C,ELECT 22UF-M/50V	D0402200870605			
	C473	nsp	C,CERAMIC SL220PF-J/500V	D00022106D051S			
	C474	00D2544574922	C,ELECT 100UF-M/50V	D0401010870605			
	C475,476	nsp	C,CERAMIC 470PF-K/500V	D00447127D050S			
	C477	nsp	C,CERAMIC X7R2200PF-K/50V	D0112227772005			
	C479,480	00D9630234302	C,ELECT 10UF-M/100V	D04010008C050S			
	C482	nsp	C,CERAMIC 0.1UF-K/50V	D011104577160S			
	C485	nsp	C,CERAMIC 220PF-J/50V	D010221167160S			
	C486	nsp	C,CERAMIC SL220PF-J/500V	D00022106D051S			
	C487	00D2544574919	C,ELECT 47UF-M/50V (Pb Free)	D0404700870705			
	C488	00D9630224503	C,ELECT 22UF-M/50V	D0402200870605			
	C489	nsp	C,CERAMIC SL220PF-J/500V	D00022106D051S			
	C490	00D2544574922	C,ELECT 100UF-M/50V	D0401010870605			
	C491,492	nsp	C,CERAMIC 470PF-K/500V	D00447127D050S			
	C493	nsp	C,CERAMIC X7R2200PF-K/50V	D0112227772005			
	C495,496	00D9630234302	C,ELECT 10UF-M/100V	D04010008C050S			
	C498	nsp	C,CERAMIC 0.1UF-K/50V	D011104577160S			

	Ref. No.	Part No.	Part Name		Remarks	Q'ty	New
	C501	nsp	C,CERAMIC 220PF-J/50V	D010221167160S			
	C502	nsp	C,CERAMIC SL220PF-J/500V	D00022106D051S			
	C503	00D2544574919	C,ELECT 47UF-M/50V (Pb Free)	D040470087070S			
	C504	00D9630224503	C,ELECT 22UF-M/50V	D040220087060S			
	C505	nsp	C,CERAMIC SL220PF-J/500V	D00022106D051S			
	C506	00D2544574922	C,ELECT 100UF-M/50V	D040101087060S			
	C507,508	nsp	C,CERAMIC 470PF-K/500V	D00447127D050S			
	C509	nsp	C,CERAMIC X7R2200PF-K/50V	D011222777200S			
	C511,512	00D9630234302	C,ELECT 10UF-M/100V	D04010008C050S			
	C513,514	00D9630338402	C,ELECT 330UF-M/6.3V	D040331081050S			
	C515	00D2544538913	C,ELECT 22UF-M/16V	D040220083070S			
OTHERS PARTS GROUP							
	BKT400	nsp	BRACKET 0.8t/SCREW	4010210196100S			
	CN404	963612504740D	CN,WIRE 2MM 170MM/5P	L002171050060S			
	CP401	nsp	CN.WAFER 13P STRAIGHT	L101200101310S			
	CP402	nsp	CN.WAFER 5P 5267-05A	L102526700500S			
	CP403	nsp	CN.WAFER 10P STRAIGHT	L101200101010S			
	CP405	nsp	CN.WAFER 3P 5267-03A	L102526700300S			
	G400-402	nsp	CN,WIRE 1P	L000600010050S			
	J538	nsp	CN.WIRE 1P	L045061000050S			
	TP401-407	nsp	CN.WAFER 3P	L101200100320S			

MAIN PCB UNIT ASS'Y

	Ref. No.	Part No.	Part Name		Remarks	Q'ty	New
SEMICONDUCTORS GROUP							
	IC4000	00D2630553006	IC NJM7805FA	J126780500130S			
	IC4001	00D2630554005	IC NJM7905FA	J126790500020S			
	IC4002	00D2630810008	IC NJM7808FA	J126780800030S			
	IC4003	00D2630553006	IC NJM7805FA	J126780500130S			
	IC4004	00D2630503001	IC NJM7908FA	J126790800020S			
⚠	IC4140	231010091708S	IC,LINEAR POWER TOP258MG SDIP10	J122258001010S			
⚠	IC4142	00D2623047008	IC PC123X2YFZ (DIP4P SHARP)	K614123000010S			
	IC4143	212050010508S	IC KIA2431AP	J126243118010S			
	Q4000-4004	943215500020S	TR 2SA RT1P141C	J520101411210S			
	Q4005-4009	943216500020S	TR 2SC RT1N141C	J522101411210S			
	Q4010	943214500030S	TR 2SC INC2001AC1	J522020011210S			
	Q4012	943214500030S	TR 2SC INC2001AC1	J522020011210S			
	Q4014	943214500030S	TR 2SC INC2001AC1	J522020011210S			
	Q4016	943214500030S	TR 2SC INC2001AC1	J522020011210S			
	Q4018	943214500030S	TR 2SC INC2001AC1	J522020011210S			
	Q4020	943214500030S	TR 2SC INC2001AC1	J522020011210S			
	Q4022	943214500030S	TR 2SC INC2001AC1	J522020011210S			
	Q4024	943214500030S	TR 2SC INC2001AC1	J522020011210S			
	Q4026	943214500030S	TR 2SC INC2001AC1	J522020011210S			
	D4000-4004	963201500170D	D,SWITCHING CHIP LBAS16HT1G FAST	K005041480230S			
	D4007	00D2760401905	D,SWITCHING 1SS133T	K000013300520S			
	D4008	963203500300D	D,RECTIFIER BRIDGE DIODE	K047100600220S			
	D4009-4012	963201500160D	D,SWITCHING 1N4007 52REEL	K000400700220S			
	D4013	00D9630236504	D,SCHOTTKY RB721Q-40	K120072140010S			
	D4014,4015	963201500160D	D,SWITCHING 1N4007 52REEL	K000400700220S			
	D4016	00D2760401905	D,SWITCHING 1SS133T	K000013300520S			
	D4017,4018	963201500160D	D,SWITCHING 1N4007 52REEL	K000400700220S			
	D4019	00D2760401905	D,SWITCHING 1SS133T	K000013300520S			
	D4020-4022	963201500160D	D,SWITCHING 1N4007 52REEL	K000400700220S			
	D4023	00D9630236504	D,SCHOTTKY RB721Q-40	K120072140010S			
	D4024,4025	963201500160D	D,SWITCHING 1N4007 52REEL	K000400700220S			
	D4026	00D9630236504	D,SCHOTTKY RB721Q-40	K120072140010S			
	D4027-4030	963201500160D	D,SWITCHING 1N4007 52REEL	K000400700220S			
	D4031,4032	00D2760401905	D,SWITCHING 1SS133T	K000013300520S			
	D4033-4036	963201500160D	D,SWITCHING 1N4007 52REEL	K000400700220S			
	D4037	00D2760401905	D,SWITCHING 1SS133T	K000013300520S			
	D4038	963201500160D	D,SWITCHING 1N4007 52REEL	K000400700220S			
	D4039	00D9630236504	D,SCHOTTKY RB721Q-40	K120072140010S			
	D4140-4148	963201500160D	D,SWITCHING 1N4007 52REEL	K000400700220S			
	D4149	963204500210D	D,SCHOTTKY S30SC6MT 60V 30A	K120300600010S			
	D4150	00D2760401905	D,SWITCHING 1SS133T	K000013300520S			
	ZD4000,4001	963202500360D	D,ZENER ZJ33B-0.5W/5MA-52MM	K06033R044522S			
	ZD4002	963202500330D	D,ZENER ZJ6.8B-0.5W	K06006R844522S			
	ZD4147-4149	963202500370D	D,ZENER ZJ39B-0.5W/5MA-52MM	K06039R044522S	U1B		
	ZD4150-4157	963202500350D	D,ZENER ZJ22B-0.5W	K06022R044522S			

	Ref. No.	Part No.	Part Name		Remarks	Q'ty	New
	ZD4158	963202500370D	D,ZENER ZJ39B-0.5W/5MA-52MM	K06039R044522S			
	ZD4159	963202500320D	D,ZENER ZJ5.6B-0.5W/5MA-52MM	K06005R644522S			
	ZD4160	00D9600095704	ZENER DIODE MTZJ6.2B-0.5W	K06006R244520S	U1B		
	ZD4160	00D2760665903	ZENER DIODE MTZJ16B-0.5W	K06016R044520S	N1B, N1SG, K1B		
	RESISTORS GROUP						
	R4000,4001	963125010110S	R,METAL FILM 470-J,2W	C060047166060S			
	R4002-4015	963125010100S	R,METAL FILM 10-J 2W	C060010066050S			
	R4025-4027	963125500070D	R,METAL FILM 100PPM 1.1K-J	C060011265050S			
	R4029	nsp	R,METAL FILM 10K-J,1/4W	C060103063050S			
	R4147	nsp	270K-J,1/16W-1608	C20002746M160S	U1B		
	R4147	nsp	56K-J,1/16W-1608	C20005636M160S	N1B, N1SG, K1B		
	R4148,R4149	nsp	2.2M-J,1/5W-52RE-AX	C00002256P520S	U1B		
	R4150	nsp	1M-J,1/5W-52RE-AX	C00001056P520S	U1B		
CAPACITORS GROUP							
	C4000	nsp	C,FILM MI-0.047UF-J/50V	D020473167050S			
	C4001	nsp	C,CERAMIC 2200PF-K/50V	D011222777160S			
	C4003	nsp	C,FILM MI-0.047UF-J/50V	D020473167050S			
	C4004	nsp	C,CERAMIC 2200PF-K/50V	D011222777160S			
	C4006,4007	nsp	C,FILM MI-0.047UF-J/50V	D020473167050S			
	C4008	nsp	C,CERAMIC 2200PF-K/50V	D011222777160S			
	C4010,4011	nsp	C,FILM MI-0.047UF-J/50V	D020473167050S			
	C4012	nsp	C,CERAMIC 2200PF-K/50V	D011222777160S			
	C4014	nsp	C,CERAMIC 2200PF-K/50V	D011222777160S			
	C4016,4017	nsp	C,FILM MI-0.047UF-J/50V	D020473167050S			
	C4018	nsp	C,CERAMIC 2200PF-K/50V	D011222777160S			
	C4020	nsp	C,FILM MI-0.047UF-J/50V	D020473167050S			
	C4021	nsp	C,CERAMIC 2200PF-K/50V	D011222777160S			
	C4023-4025	nsp	C,FILM MI-0.047UF-J/50V	D020473167050S			
	C4027	nsp	C,CERAMIC 1000PF-K/50V	D011102777160S			
	C4028	nsp	C,FILM MI-0.047UF-J/50V	D020473167050S			
	C4030	nsp	C,FILM MI-0.047UF-J/50V	D020473167050S			
	C4032	nsp	C,CERAMIC 1000PF-K/50V	D011102777160S			
	C4035	nsp	C,CERAMIC 1000PF-K/50V	D011102777160S			
	C4038	nsp	C,CERAMIC 1000PF-K/50V	D011102777160S			
	C4041	nsp	C,CERAMIC 1000PF-K/50V	D011102777160S			
	C4044	nsp	C,CERAMIC 1000PF-K/50V	D011102777160S			
	C4047	nsp	C,CERAMIC 1000PF-K/50V	D011102777160S			
	C4049	00D2544574922	C,ELECT 100UF-M/50V	D040101087060S			
	C4050,4051	nsp	C,FILM 0.1UF-K/250V	D02010407H080S			
	C4052	963134501800D	C,ELECT GE 85C 10000UF-M/71V	D040103089220S			
	C4053	00D2544573981	C,ELECT 10UF-M/50V	D040100087070S			
	C4054	963134501800D	C,ELECT GE 85C 10000UF-M/71V	D040103089220S			
	C4057	00D9630244606	C,ELECT 0.1UF-M/50V (Pb Free)	D040R10087080S			
	C4058	963134010700S	C,ELECT 2200UF-M/25V	D040222084030S			
	C4059	963134011290S	C,ELECT 4700UF-M/16V	D040472083020S			
	C4060,4061	00D2544573981	C,ELECT 10UF-M/50V	D040100087070S			
	C4062	00D9630217002	C,ELECT 3300UF-M/16V	D040332083010S			
	C4063	00D2544573981	C,ELECT 10UF-M/50V	D040100087070S			

	Ref. No.	Part No.	Part Name		Remarks	Q'ty	New
	C4064	00D9630333203	C,ELECT 100UF-M/16V	D040101083090S			
	C4065	90M-OA000500R	C,ELECT 4700UF-M/25V(MHA)	D040472084240S			
	C4066	00D9630333203	C,ELECT 100UF-M/16V	D040101083090S			
	C4067	90M-OA000500R	C,ELECT 4700UF-M/25V(MHA)	D040472084240S			
	C4068	00D9630333203	C,ELECT 100UF-M/16V	D040101083090S			
	C4070	00D2544573981	C,ELECT 10UF-M/50V	D040100087070S			
	C4076	00D2544573981	C,ELECT 10UF-M/50V	D040100087070S			
	C4077-4081	nsp	C,CERAMIC 100PF-J/50V	D010101167160S			
	C4082	nsp	C,CERAMIC 0.1UF-K/50V	D011104577160S			
	C4083,4084	00D9630224503	C,ELECT 22UF-M/50V	D040220087060S			
	C4085	nsp	C,CERAMIC 330PF-J/50V	D010331167160S			
	C4086	nsp	C,CERAMIC 0.01UF-K/50V	D010103777160S			
	C4087	nsp	C,CERAMIC 330PF-J/50V	D010331167160S			
	C4088-4091	00D9630224503	C,ELECT 22UF-M/50V	D040220087060S			
	C4092	nsp	C,CERAMIC 330PF-J/50V	D010331167160S			
	C4093	nsp	C,CERAMIC 0.01UF-K/50V	D010103777160S			
	C4094	nsp	C,CERAMIC 330PF-J/50V	D010331167160S			
	C4095,4096	00D9630224503	C,ELECT 22UF-M/50V	D040220087060S			
	C4097	nsp	C,CERAMIC 0.01UF-K/50V	D010103777160S			
	C4098	nsp	C,CERAMIC 330PF-J/50V	D010331167160S			
	C4099-4102	00D9630224503	C,ELECT 22UF-M/50V	D040220087060S			
	C4103	nsp	C,CERAMIC 330PF-J/50V	D010331167160S			
	C4104	nsp	C,CERAMIC 0.01UF-K/50V	D010103777160S			
	C4105	nsp	C,CERAMIC 330PF-J/50V	D010331167160S			
	C4106-4109	00D9630224503	C,ELECT 22UF-M/50V	D040220087060S			
	C4110	nsp	C,CERAMIC 330PF-J/50V	D010331167160S			
	C4111	nsp	C,CERAMIC 0.01UF-K/50V	D010103777160S			
	C4112	nsp	C,CERAMIC 330PF-J/50V	D010331167160S			
	C4113,4114	00D9630224503	C,ELECT 22UF-M/50V	D040220087060S			
⚠	C4140,4141	963134011730S	C,CERAMIC DE1B3KX471KB4BL01	D00847127H010S			
⚠	C4142	963132011940S	C,CERAMIC DE2F3KY103MB3BM02	D006103589010S			
	C4143	nsp	C,FILM 0.1UF-K/275V	D02110407H010S			
	C4145-4147	nsp	C,CERAMIC 0.1UF-K/25V	D011104774161S			
⚠	C4148,C4149	963132011940S	C,CERAMIC DE2F3KY103MB3BM02	D006103589010S	N1B, N1SG, K1B		
	C4150	nsp	C,CERAMIC 0.1UF-K/25V	D011104774161S	N1B, N1SG, K1B		
	C4151	943134501590S	C,ELECT GE 105C 100UF-M/200V	D04110108G000S	U1B		
	C4151	963134010200S	C,ELECT 100UF-M/400V	D04110108K000S	N1B, N1SG, K1B		
	C4152	963134010210S	C,ELECT 47UF-M/25V	D041470084050S			
	C4153	963132010120S	C,CERAMIC DEHR33A102KB2B	D00810207Q010S			
	C4154	nsp	C,CERAMIC 0.1UF-K/25V	D011104774161S			
	C4155	963134010190S	C,ELECT 10UF-M/50V	D041100087050S			
⚠	C4156	963132011930S	C,CERAMIC DE1E3KX222MB4BL01	D00822248H010S			
	C4159,4160	nsp	C,CERAMIC 0.1UF-K/25V	D011104774161S			
	C4161	nsp	C,CERAMIC 4.7UF-K/6.3V	D011475571160S			
	C4162	963134010220S	C,ELECT5600UF-M/6.3V	D041562081001S			
	C4164,4165	963134010220S	C,ELECT5600UF-M/6.3V	D041562081001S			
	C4166	nsp	C,CERAMIC 0.1UF-K/25V	D011104774161S			
OTHERS PARTS GROUP							
	BD4000	nsp	COIL,BEAD CBW160808U121T	D340160811210S			
	BKT4141	nsp	BRACKET 0.8t/SCREW	4010210196100S			

	Ref. No.	Part No.	Part Name		Remarks	Q'ty	New
	BKT4142	nsp	BRACKET SCREW	4010210196000S			
	BKT4143	nsp	BRACKET t1.0+Sn plating /PCB MTG	4010214876000S			
	CN4000	nsp	CN,WIRE 160MM/5P 5264-05	L000161050060S			
	CN4001	nsp	CN,WIRE 260MM/3P 5264-03	L000261030110S			
	CN4002	nsp	CN,WIRE 2MM 120MM/10P 20010HS-10	L002121102620S			
	CN4141	nsp	CN,WIRE 330MM/5P SMH250-05	L000331050110S			
	CP4000	nsp	CN.WAFER 7.92MM 35328-0360	L108353280360S			
	CP4001	nsp	CN,WAFER C125Z1-13 13P	L109012511320S			
	CP4002	nsp	CN,WAFER C125Z1-15 15P	L109012511520S			
	CP4003	nsp	CN,WAFER C125Z1-11 11P	L109012511120S			
	CP4004	nsp	CN,WAFER C125Z1-17 17P	L109012511720S			
	CP4005	nsp	CN,WAFER C125Z1-15 15P	L109012511520S			
	CP4142	nsp	CN.WAFER 7.92MM LWBP1143-02P	L108011430210S			
⚠	F4140	963652010510S	FUSE T2A/250V	N7515020011160S	U1B		
⚠	F4140	963652010500S	FUSE T1.6A/250V	N7515016011160S	N1B, N1SG, K1B		
⚠	F4141	963652010520S	FUSE T6.3A/250V	N7515063011160S	U1B		
⚠	F4141	963652010910S	FUSE T3.15A/250V	N7515031511160S	N1B, N1SG, K1B		
	JACK4000	963643101950S	TER,BOARD SCREW 6P	G613602A1W02YS			
	JACK4001	963643101960S	TER,BOARD SCREW 8P	G614801AW020YS			
	JACK4002	963643010330S	TER,RCA 6PIN	G603615A0700YS			
	JACK4003	963643101830S	TER,RCA 3PIN	G606305B2300YS			
⚠	JK4140	963641011240S	SOCKET,POWER AC (INLET JACK)	G4300152P0001S			
	L4000-4006	nsp	SP-2507 1.0 PI*2UEW TURNS	D3309000013 30S			
⚠	L4140	963111100420D	COIL,LINE FILTER SQ2014 27mH	D3202014055 10S			
	RLY4000	00D9630218409	RELAY BC3-12 24V 2A	G6802402020 30S			
	RLY4001-4004	963682100280D	RELAY JZC-42F/012-2HST	G6800601030 10S			
⚠	RLY4140	963682100290D	RELAY JZC-36FD/005-HLT	G6800601030 30S			
	PACK4000	943183100200S	TUNER,FM KST-MW004FV1-S63SV	E9000040100 30S	U1B		⚠
	PACK4000	943183100210S	TUNER,FM KST-MW104FV1-S63V	E900104011630S	N1B, N1SG		⚠
	PACK4000	943183100220S	TUNER,FM KST-MW004FV1-S63	E9000040106 30S	K1B		⚠
	FC4140A	nsp	HOLDER,FUSE CLIP	G6450000050010S			
	FC4140B	nsp	HOLDER,FUSE CLIP	G6450000050010S			
	FC4141A	nsp	HOLDER,FUSE CLIP	G6450000050010S			
	FC4141B	nsp	HOLDER,FUSE CLIP	G6450000050010S			
⚠	T4140	963102100020S	TRANS,SWITCHING EER2834	E0602834065 20S			
	TR4140	963222500150D	SEMI,FET CHIP KMB2D0N60SA	J5432060055 10S			
	TR4142	963213500170D	SEMI,TR/GE NPN 2SC KTC3198G	J5023198G0000S			

VIDEO PCB UNIT ASS'Y

	Ref. No.	Part No.	Part Name	Remarks		Q'ty	New
SEMICONDUCTORS GROUP							
	IC5000	2328100055045	IC BD7628F-E2		J127762800010S		
	IC5001	963239100770S	IC,LOGIC TC4051BF SINGLE BCH		J040405101110S		
	IC5002	963239003470S	IC NJM2586AM		J171258600010S		
CAPACITORS GROUP							
	C5000	00D9630293709	C,ELECT 100UF-M/10V		D0401010820705		
	C5001	nsp	C,CERAMIC 0.01UF-K/50V		D0101037771605		
	C5002,5003	00D9630224503	C,ELECT 22UF-M/50V		D0402200870605		
	C5004	nsp	C,CERAMIC 0.01UF-K/50V		D0101037771605		
	C5006,5007	nsp	C,CERAMIC 0.01UF-K/50V		D0101037771605		
	C5008-5010	nsp	C,CERAMIC 68PF-J/50V		D0106801671605		
	C5011	00D9630293709	C,ELECT 100UF-M/10V		D0401010820705		
	C5012	nsp	C,CERAMIC 68PF-J/50V		D0106801671605		
	C5013,5014	nsp	C,CERAMIC 0.1UF-K/50V		D0111045771605		
	C5015,5016	nsp	C,CERAMIC 68PF-J/50V		D0106801671605		
	C5017,5018	00D9630293602	C,ELECT 1UF-M/50V (Pb Free)		D0400100871505		
	C5019,5020	nsp	C,CERAMIC 0.1UF-K/50V		D0111045771605		
	C5021	00D9630293602	C,ELECT 1UF-M/50V (Pb Free)		D0400100871505		
	C5022	00D9630293709	C,ELECT 100UF-M/10V		D0401010820705		
	C5023-5025	00D9630293602	C,ELECT 1UF-M/50V (Pb Free)		D0400100871505		
	C5027,5028	nsp	C,CERAMIC 330PF-J/50V		D0103311671605		
	C5031,5032	nsp	C,CERAMIC 330PF-J/50V		D0103311671605		
	C5035	nsp	C,CERAMIC 330PF-J/50V		D0103311671605		
	C5036,5037	nsp	C,CERAMIC 1000PF-K/50V		D0111027771605		
	C5038	nsp	C,CERAMIC 330PF-J/50V		D0103311671605		
	C5041	nsp	C,CERAMIC 330PF-J/50V		D0103311671605		
	C5042	nsp	C,CERAMIC 1000PF-K/50V		D0111027771605		
	C5043	nsp	C,CERAMIC 330PF-J/50V		D0103311671605		
	C5044	nsp	C,CERAMIC 1000PF-K/50V		D0111027771605		
	C5048	nsp	C,FILM 0.1UF-J/50V		D0201041670505		
	C5051	nsp	C,FILM 0.1UF-J/50V		D0201041670505		
OTHERS PARTS GROUP							
	BKT5000,5001	nsp	BRACKET 0.8t/SCREW		40102101961005		
	CN4001	nsp	CN,WAFER C125Z2-13 13P		L109012521320S		
	CN4002	nsp	CN,WAFER C125Z2-15 15P		L109012521520S		
	CN5000,5001	nsp	CN,WAFER C125Z2-13 13P		L109012521320S		
	CN5002	nsp	CN,WAFER C125Z2-15 15P		L109012521520S		
	CP3401	nsp	CN,WAFER C125Z1-13 13P		L109012511320S		
	CP3402	nsp	CN,WAFER C125Z1-09 9P		L109012510920S		
	CP3404	nsp	CN,WAFER C125Z1-07 7P		L109012510720S		
	CP5000,5001	nsp	CN,WAFER C125Z1-13 13P		L109012511320S		
	CP5003	nsp	CN.WAFER 2.5MM 8P		L102526808010S		
⚠	F5000	963652500120S	FUSE T1.25A/250V		N751501251160S		
	F5000A	nsp	HOLDER,FUSE CLIP		G645000050010S		
	F5000B	nsp	HOLDER,FUSE CLIP		G645000050010S		

	Ref. No.	Part No.	Part Name	Remarks		Q'ty	New
⚠	F5001	9636520105005	FUSE T1.6A/250V		N751501601160S		
	F5001A	nsp	HOLDER,FUSE CLIP		G645000050010S		
	F5001B	nsp	HOLDER,FUSE CLIP		G645000050010S		
⚠	F5002	9636520105005	FUSE T1.6A/250V		N751501601160S		
	F5002A	nsp	HOLDER,FUSE CLIP		G645000050010S		
	F5002B	nsp	HOLDER,FUSE CLIP		G645000050010S		
⚠	F5003	9636520105005	FUSE T1.6A/250V		N751501601160S		
	F5003A	nsp	HOLDER,FUSE CLIP		G645000050010S		
	F5003B	nsp	HOLDER,FUSE CLIP		G645000050010S		
⚠	F5004	9636520105005	FUSE T1.6A/250V		N751501601160S		
	F5004A	nsp	HOLDER,FUSE CLIP		G645000050010S		
	F5004B	nsp	HOLDER,FUSE CLIP		G645000050010S		
	JACK5000	963643101850S	TER,RCA 6PIN RCA-603B-95		G603603B9500YS		
	JACK5001	00D9630146306	RCA-603B-26(GN,BL,RD,GN,BL,RD)	TER,RCA 6PIN	G603603B2600YS		
	JACK5002	00D9630387505	TER,RCA 4PIN RCA-405B-55		G602405B5500YS		
	JACK5003	00D9630132103	TER,RCA 4PIN RCA-405B-04		G602405B0400YS		
	JP212	nsp	R,CHIP 0-J,1/8W		C2000000613005		

FRONT PCB UNIT ASS'Y

	Ref. No.	Part No.	Part Name	Remarks		Q'ty	New
SEMICONDUCTORS GROUP							
	IC4400	963231101200S	IC,LINEAR-REGULATOR		J1262887000010S		
	IC4401,4402	00D2631289900	IC AZ4580M		J1214580000020S		
	Q4403	00D9630226705	TR KTC1027Y		J5021027Y0020S		
	Q4405-4409	943216500020S	TR 2SC RT1N141C		J522101411210S		
	Q4410	943215500030S	TR 2SA RT1P441C		J520104411210S		
	D4400	963201500170D	D,SWITCHING CHIP LBAS16HT1G FAST		K005041480230S		
	D4401-4405	963201500160D	D,SWITCHING 1N4007 52REEL		K000400700220S		
	D4406,4407	963209003510S	D,ESD CDS3C05HDMI1		K067030500010S		
	D4408	963209500020S	D,ESD CDS3C15GTA		K067031500010S		
	D4409-4416	963201500170D	D,SWITCHING CHIP LBAS16HT1G FAST		K005041480230S		
	ZD4401	963202500420S	D,ZENER ZJ18B-0.5W		K06018R044522S		
	ZD4402	963202500430S	D,ZENER ZJ24B-0.5W		K06024R044522S		
	ZD4403,4404	963202500310D	D,ZENER ZJ5.1B-0.5W		K06005R144522S		
	ZD4407	963202500310D	D,ZENER ZJ5.1B-0.5W		K06005R144522S		
	LED4406,4407	963263012110S	LED BL-BUF4V5K-1-AV-FP3.5 3PI RED		K500032000160S		
	LED4408	963263100510S	LED WEJ3290W-R2H0-BA 3PI		K500032451010S		
RESISTORS GROUP							
	R4401	00D9639006272	R,FIXED RSD-R1-1WJ-4.7		N113135647920S		
CAPACITORS GROUP							
	C4409,4410	nsp	C,FILM 0.1UF-K/250V		D02010407H080S		
	C4411	nsp	C,CERAMIC 0.1UF-K/50V		D011104577160S		
	C4412	00D2544573981	C,ELECT 10UF-M/50V		D040100087070S		
	C4414	00D9630157900	C,ELECT 470UF-M/63V		D040471088010S		
	C4416	00D2544573981	C,ELECT 10UF-M/50V		D040100087070S		
	C4418	nsp	C,CERAMIC 0.1UF-K/50V		D011104577160S		
	C4419	00D2544573981	C,ELECT 10UF-M/50V		D040100087070S		
	C4421,4422	00D2544573981	C,ELECT 10UF-M/50V		D040100087070S		
	C4424	nsp	C,CERAMIC 0.1UF-K/50V		D011104577160S		
	C4426	nsp	C,CERAMIC 0.1UF-K/50V		D011104577160S		
	C4427-4429	nsp	C,CERAMIC 100PF-J/50V		D010101167160S		
	C4431,4432	nsp	C,CERAMIC 0.1UF-K/50V		D011104577160S		
	C4433	00D2544573981	C,ELECT 10UF-M/50V		D040100087070S		
	C4434	nsp	C,CERAMIC0.01UF-K/50V		D011103777160S		
	C4435	nsp	C,CERAMIC 0.1UF-K/50V		D011104577160S		
	C4436	nsp	C,CERAMIC 0.047UF-Z/50V		D011473597160S		
	C4437,4438	00D9630293602	C,ELECT 1UF-M/50V (Pb Free)		D040010087150S		
	C4440,4441	nsp	C,CERAMIC0.01UF-K/50V		D011103777160S		
	C4442,4443	nsp	C,CERAMIC 470PF-J/50V		D010471167160S		
	C4444	nsp	C,CERAMIC COG82PF-J/50V		D010820167160S		
	C4445	00D2544573981	C,ELECT 10UF-M/50V		D040100087070S		
	C4446	00D9630293709	C,ELECT 100UF-M/10V		D040101082070S		

	Ref. No.	Part No.	Part Name	Remarks		Q'ty	New
	C4447	nsp	C,CERAMIC0.047UF-K/25V		D0114737741615		
	C4448	nsp	C,CERAMIC 0.1UF-K/50V		D0111045771605		
	C4449	00D2544573981	C,ELECT 10UF-M/50V		D0401000870705		
	C4450	nsp	C,CERAMIC0.047UF-K/25V		D0114737741615		
	C4451	nsp	C,CERAMIC 0.047UF-Z/50V		D0114735971605		
	C4452,4453	00D2544573981	C,ELECT 10UF-M/50V		D0401000870705		
	C4454	nsp	C,CERAMIC 0.1UF-K/50V		D0111045771605		
	C4455,4456	nsp	C,CERAMIC 330PF-J/50V		D0103311671605		
	C4457,4458	nsp	C,CERAMIC 1000PF-K/50V		D0111027771605		
	C4460,4461	nsp	C,CERAMIC0.01UF-K/50V		D0111037771605		
	C4462	nsp	C,CERAMIC 0.1UF-K/50V		D0111045771605		
	C4463	nsp	C,ELECT 220UF-M/6.3V		D0402210810705		
	C4464	nsp	C,CERAMIC 0.1UF-K/50V		D0111045771605		
	C4465,4466	nsp	C,CERAMIC 470PF-J/50V		D0104711671605		
	C4467	nsp	C,CERAMIC 100PF-J/50V		D0101011671605		
	C4469	00D9630293602	C,ELECT 1UF-M/50V (Pb Free)		D0400100871505		
	C4472,4473	nsp	C,FILM ST-0.01UF-J/100V		D02010306C0605		
	C4474,4475	00D9630293602	C,ELECT 1UF-M/50V (Pb Free)		D0400100871505		
	C4476	nsp	C,FILM 0.1UF-J/100V		D02010406C0605		
	C4477	nsp	C,FILM 0.047UF-J/100V		D02047306C0605		
	C4478,4479	nsp	C,CERAMIC 0.1UF-K/50V		D0111045771605		
	C4480	nsp	C,CERAMIC 0.047UF-Z/50V		D0114735971605		
OTHERS PARTS GROUP							
	BD4400	nsp	COIL,BEAD CBW160808U121T		D3401608112105		
	BD4401-4407	nsp	CHIP RES. 0-J 1/16W-1608REEL		C20000006M1605		
	BD4408	nsp	COIL,BEAD BLM21PG221SN1		D3402012122105		
	BD4409,4410	nsp	CHIP RES. 0-J 1/16W-1608REEL		C20000006M1605		
	BKT4001	nsp	BRACKET USB		40102152160005		
	BKT4400,4401	nsp	BRACKET SCREW		40102101960005		
	CLAMP401	nsp	CLAMP WIRE(SOLDER)		43300001200005		
	CLAMP403	nsp	CLAMP WIRE(SOLDER)		43300001200005		
	CLAMP405	nsp	CLAMP WIRE(SOLDER)		43300001200005		
	CN4400	nsp	CN.FPC 1.0MM 1.0-11S-40PW 40P		L130100114050S		
	CN4401	nsp	CN.WAFER 5P TUC-P05X		L101100030510S		
	CN4402	nsp	CN,WIRE 2MM 500MM/5P		L002501050040S		
	CP4400	nsp	CN.WAFER 5268-07A 7P		L102526800700S		
	CP4401	nsp	CN.WAFER 5P TUC-P05P		L101100040510S		
⚠	F4400	963652500020S	FUSE 6125FF500-R 500mA		G6576125050305		
	G4401	nsp	RING,TER WIRE 160MM		84101610101205		
	JACK4400	963643101150S	JACK,D3.5 JALCO(YKB21-5442V)		G401KB215442VS		
	JACK4401	963643101160S	TER,RCA 3PIN RCA-328H-1-03(BK,BK,BK)		G606328H0300YS		

	Ref. No.	Part No.	Part Name	Remarks		Q'ty	New
	JK4400	963643101840S	CN,PLUG CONTACT USB A		G480040001010S		
	JK4401	963643101120S	JACK,D6.5 PHONE (YUQIU) D6.5 9P		G402PJ612A09YS		
	RMC4400	963262012130S	MODULE,REMOCON R34ES9A		E940349003610S		
	SW4400-4409	00D9630095305	SW,TACT SKHV10910D01		G180040500010S		
	VEC4400	963667012360S	SW,ENCODER EC16B24T01D4ZZZ		G121162400060S		
	VEC4401	00D9630387408	SW,ENCODER EC16B24SO		G121162400070S		
	FLT4400	172010008005S	DISPLAY,FLT GP1261AI		K530126100010S		
		nsp	HOLDER ASSY SR6007U1B(MARANTZ)		4328211106000		

INPUT PCB UNIT ASS'Y

	Ref. No.	Part No.	Part Name	Remarks		Q'ty	New
SEMICONDUCTORS GROUP							
	IC4200	963239000650S	IC R2A15218FP		J0841521800 10S		
	Q4200,4201	943214500030S	TR 2SC INC2001AC1		J522020011210S		
	Q4204	943215500020S	TR 2SA RT1P141C		J5201014112 10S		
	Q4205	943216500020S	TR 2SC RT1N141C		J5221014112 10S		
	Q4206,4207	943215500020S	TR 2SA RT1P141C		J5201014112 10S		
	Q4208	943216500020S	TR 2SC RT1N141C		J5221014112 10S		
	Q4209-4213	943215500020S	TR 2SA RT1P141C		J5201014112 10S		
	D4210-4212	963201500160D	D,SWITCHING 1N4007 52REEL		K0004007002 20S		
	ZD4200	963202500290D	D,ZENER ZJ3.6B-0.5W		K06003R644522S		
	CAPACITORS GROUP						
	C4200,4201	nsp	C,CERAMIC 330PF-J/50V		D010331167160S		
	C4202,4203	00D9630224503	C,ELECT 22UF-M/50V		D0402200870 60S		
	C4204-4211	nsp	C,CERAMIC 330PF-J/50V		D010331167160S		
	C4220	00D9630244606	C,ELECT 0.1UF-M/50V (Pb Free)		D040R100870 80S		
	C4221,4222	00D9630224503	C,ELECT 22UF-M/50V		D0402200870 60S		
	C4223-4228	00D2544573981	C,ELECT 10UF-M/50V		D0401000870 70S		
	C4229-4231	00D2544577945	C,ELECT 100UF-M/16V RA3		D0401010832 20S		
	C4232-4236	nsp	C,ELECT 47UF-M/16V		D0404700830 80S		
	C4237-4244	00D2544573981	C,ELECT 10UF-M/50V		D0401000870 70S		
	C4245,4246	00D2544574922	C,ELECT 100UF-M/50V		D0401010870 60S		
	C4247	00D2544573981	C,ELECT 10UF-M/50V		D0401000870 70S		
	C4248-4252	00D9630244606	C,ELECT 0.1UF-M/50V (Pb Free)		D040R100870 80S		
OTHERS PARTS GROUP							
	CN401	nsp	CN,WIRE 2MM 200MM		L002201130010S		
	CN4003	nsp	CN,WAFER C125Z2-11		L109012521120S		
	CN4004	nsp	CN,WAFER C125Z2-17		L109012521720S		
	CN4005	nsp	CN,WAFER C125Z2-15		L109012521520S		
	CN4700	nsp	CN,WAFER C125Z2-09		L109012520920S		
	CN4701	nsp	CN,WAFER C125Z2-09		L109012521320S		
	CP4200	nsp	CN,WAFER C125Z1-23 23P		L109012512320S		
	CP4201	nsp	CN,WAFER C125Z1-31 31P		L109012513120S		
	CP4202	nsp	CN,WAFER C125Z1-15 15P		L109012511520S		
	CP4203	nsp	CN,WAFER C125Z1-07 7P		L109012510720S		
	JACK4200,4201	00D9630132103	TER,RCA 4PIN RCA-405B-04		G602405B0400YS		
	JACK4202	90M-YT004640R	TER,RCA 2PIN RCA-207AE-02		G601207AE020YS		

HDMI PCB UNIT ASS'Y

NOTE: When replacing the U3002 or U1602, use the U3002(943243100930S) or U1602(963248100710S).
When the following are replaced, always rewrite with updated firmware using DFW.
(Refer to "PROCEDURE FOR UPGRADING THE VERSION OF THE FIRMWARE" (56 page).)

- HDMI PCB UNIT ASS'Y
- U1602 (MX25L6406EM2I-12G)
- U2205 (EPM3032A-TC44)
- U3002 (R5F56108VNFP)
- U2003 (EN29LV160BB-70TIP)

	Ref. No.	Part No.	Part Name	Remarks		Q'ty	New
SEMICONDUCTORS GROUP							
	Q1001-1004	943216500020S	TR 2SC RT1N141C		J522101411210S		
	Q1005-1008	943216500050S	TR 2SC RT1N441C		J522104411210S		
	Q1303-1305	943216500020S	TR 2SC RT1N141C		J522101411210S		
	Q1606	963223500020D	SEMI,FET CHIP UPA672T-T1-A SC-70		J543672001010S		
	Q2201	943216500050S	TR 2SC RT1N441C		J522104411210S		
	Q2202	943216500020S	TR 2SC RT1N141C		J522101411210S		
	Q3003	943215500020S	TR 2SA RT1P141C		J520101411210S		
	Q3201	943214500020S	TR 2SC 2SC3052		J522305200050S		
	Q3202	963219002180S	TR 2SD2114KT146W		J5232114K0010S		
	Q3203	943214500020S	TR 2SC 2SC3052		J522305200050S		
	Q3204	963212500030S	TR 2SA ISA1530AC1		J520015301210S		
	Q3205,3206	943214500020S	TR 2SC 2SC3052		J522305200050S		
	Q3207	963212500030S	TR 2SA ISA1530AC1		J520015301210S		
	Q3208	943214500020S	TR 2SC 2SC3052		J522305200050S		
	Q3209	943216500020S	TR 2SC RT1N141C		J522101411210S		
	Q3210	943214500020S	TR 2SC 2SC3052		J522305200050S		
	Q3211	943216500020S	TR 2SC RT1N141C		J522101411210S		
	Q3212	943214500020S	TR 2SC 2SC3052		J522305200050S		
	Q3213-3216	943216500020S	TR 2SC RT1N141C		J522101411210S		
	Q3217	943214500020S	TR 2SC 2SC3052		J522305200050S		
	Q3218,3219	943216500020S	TR 2SC RT1N141C		J522101411210S		
	Q3220	943214500020S	TR 2SC 2SC3052		J522305200050S		
	Q3601-3605	943216500050S	TR 2SC RT1N441C		J522104411210S		
	Q3606,3607	963211500160D	SEMI,CHIP TR/PNP 2SB PBSS5140U		J521051401010S		
	Q3608-3612	963219004200S	CHIP FDC608PZ P-CH		J543608000010S		
	Q3613,3614	943216500020S	TR 2SC RT1N141C		J522101411210S		
	Q3615-3618	963211500160D	SEMI,CHIP TR/PNP 2SB PBSS5140U		J521051401010S		
	Q3619	00D2710326904	TR 2SA 2SA1954		J520195405510S		
	Q3620	963211500160D	SEMI,CHIP TR/PNP 2SB PBSS5140U		J521051401010S		
	Q3621-3626	943216500020S	TR 2SC RT1N141C		J522101411210S		
	Q3627	943214500020S	TR 2SC 2SC3052		J522305200050S		
	D1001	963204500220D	D,SCHOTTKY CHIP LRB521S-30T1G		K125521305230S		
	D1313	963204500220D	D,SCHOTTKY CHIP LRB521S-30T1G		K125521305230S		
	D2401	00D2760739907	D,SWITCHING CHIP KDS181S(B)-THICK		K005018100040S		
	D3004	963201500170D	D,SWITCHING CHIP LBAS16HT1G FAST		K005041480230S		
	D3005	90M-HI200030R	LED,IR SIR-34ST3F 3PI 2.5MM		K505343000010S		
	D3201	963201500170D	D,SWITCHING CHIP LBAS16HT1G FAST		K005041480230S		
	D3401	963204500220D	D,SCHOTTKY CHIP LRB521S-30T1G		K125521305230S		
	D3602	963201500170D	D,SWITCHING CHIP LBAS16HT1G FAST		K005041480230S		
RESISTORS GROUP							
	R1001-1004	nsp	CHIP RES. 1KJ 1/16W1005REEL		C20001026M101S		

	Ref. No.	Part No.	Part Name	Remarks		Q'ty	New
	R1005-1008	nsp	R,CHIP 10K-J,1/16W		C20001036M111S		
	R1009-1012	nsp	CHIP RES. 47KJ 1/16W1005REEL		C20004736M101S		
	R1017,1018	nsp	CHIP RES. 2.2K-J 1/16W-1005REEL		C20002226M101S		
	R1019-1021	nsp	R,CHIP 10K-J,1/16W		C20001036M111S		
	R1024-1032	nsp	R,CHIP THICK 4.7K-J,1/16W		C20004726M101S		
	R1033,1034	nsp	R,CHIP 33-J, 1/16W		C20003306M101S		
	R1036	nsp	CHIP RES. 1KJ 1/16W1005REEL		C20001026M101S		
	R1037	nsp	R,CHIP 10K-J,1/16W		C20001036M111S		
	R1039	nsp	R,CHIP 10K-J,1/16W		C20001036M111S		
	R1041	nsp	R,CHIP 10K-J,1/16W		C20001036M111S		
	R1043	nsp	R,CHIP 10K-J,1/16W		C20001036M111S		
	R1046	nsp	R,CHIP 10K-J,1/16W		C20001036M111S		
	R1252	nsp	R,CHIP 0-J,1/16W		C20000006M101S		
	R1254	nsp	R,CHIP 0-J,1/16W		C20000006M101S		
	R1255	nsp	CHIP RES. 47KJ 1/16W1005REEL		C20004736M101S		
	R1257,1258	nsp	R,CHIP 0-J,1/16W		C20000006M101S		
	R1260,1261	nsp	CHIP RES. 2.2K-J 1/16W-1005REEL		C20002226M101S		
	R1262,1263	nsp	R,CHIP 0-J,1/16W		C20000006M101S		
	R1267	nsp	R,CHIP 0-J,1/16W		C20000006M101S		
	R1301,1302	nsp	R,CHIP THICK 24-D,1/16W-1608REEL		C20002401M160S		
	R1303	nsp	R,CHIP 0-J,1/16W		C20000006M101S		
	R1305	nsp	R,CHIP THICK 51-D,1/16W-1608REEL		C20005101M160S		
	R1306-1309	nsp	R,CHIP THICK 24-D,1/16W-1608REEL		C20002401M160S		
	R1310	nsp	R,CHIP THICK 51-D,1/16W-1608REEL		C20005101M160S		
	R1311,1312	nsp	R,CHIP 0-J,1/16W		C20000006M101S		
	R1313	nsp	CHIP RES. 2.2K-J 1/16W-1005REEL		C20002226M101S		
	R1314,1315	nsp	R,CHIP THICK 51-D,1/16W-1608REEL		C20005101M160S		
	R1317	nsp	R,CHIP 0-J,1/16W		C20000006M101S		
	R1318	nsp	CHIP RES. 3.3KJ 1/16W1005REEL		C20003326M101S		
	R1319,1320	nsp	R,CHIP THICK 51-D,1/16W-1608REEL		C20005101M160S		
	R1323	nsp	R,CHIP THICK 680-J,1/16W-1005REEL		C20006816M101S		
	R1329	nsp	CHIP RES. 47KJ 1/16W1005REEL		C20004736M101S		
	R1331	nsp	R,CHIP THICK 4.7K-J,1/16W		C20004726M101S		
	R1333	nsp	R,CHIP THICK 680-J,1/16W-1005REEL		C20006816M101S		
	R1334,1335	nsp	R,CHIP THICK 4.7K-J,1/16W		C20004726M101S		
	R1336-1338	nsp	CHIP RES. 2.2K-J 1/16W-1005REEL		C20002226M101S		
	R1339,1340	nsp	R,CHIP THICK 4.7K-J,1/16W		C20004726M101S		
	R1342-1344	nsp	CHIP RES. 47KJ 1/16W1005REEL		C20004736M101S		
	R1345	nsp	CHIP RES. 2.2K-J 1/16W-1005REEL		C20002226M101S		
	R1350	nsp	R,CHIP THICK 0-J,1/10W		C200000060200S		
	R1352	nsp	R,CHIP THICK 470-D,1/16W		C20004711M160S		
	R1358,1359	nsp	R,CHIP 0-J,1/16W		C20000006M101S		
	R1360	nsp	R,CHIP THICK 4.7K-J,1/16W		C20004726M101S		
	R1401,1402	nsp	R,NETWORK A-TYPE 10-J 1/16W		C180100042100S		
	R1403,1404	nsp	R,NETWORK A-TYPE 33-J 1/16W		C180330042100S		
	R1405,1406	nsp	R,NETWORK A-TYPE 10-J 1/16W		C180100042100S		
	R1407-1409	nsp	R,NETWORK A-TYPE 4.7K-J 1/16W		C180472042100S		
	R1410-1412	nsp	R,NETWORK A-TYPE 47K-J 1/16W		C180473042100S		
	R1413-1417	nsp	R,NETWORK A-TYPE 4.7K-J 1/16W		C180472042100S		
	R1418,1419	nsp	R,CHIP 10K-J,1/16W		C20001036M111S		
	R1617,1618	963122500030D	R,CHIP THICK 1K-D,1/16W-1608REEL		C20001021M160S		
	R1619,1620	nsp	R,CHIP THICK 470-D,1/16W-1608REEL		C20004711M160S		
	R1622	nsp	R,CHIP THICK 4.7K-J,1/16W		C20004726M101S		

	Ref. No.	Part No.	Part Name	Remarks		Q'ty	New
	R1632	nsp	R,CHIP 33-J, 1/16W		C20003306M101S		
	R1635,1636	nsp	R,CHIP 10K-J,1/16W		C20001036M111S		
	R1639	nsp	CHIP RES. 1KJ 1/16W1005REEL		C20001026M101S		
	R1640	nsp	R,CHIP THICK 4.7K-J,1/16W		C20004726M101S		
	R1641	nsp	CHIP RES. 1.8K-J 1/16W-1005REEL		C20001826M101S		
	R1642	nsp	R,CHIP THICK 0-J,1/10W		C200000060200S		
	R1645,1646	nsp	R,CHIP 33-J, 1/16W		C20003306M101S		
	R1647	nsp	R,CHIP 0-J,1/16W		C20000006M101S		
	R1648	nsp	CHIP RES. 1.8K-J 1/16W-1005REEL		C20001826M101S		
	R1649-1652	nsp	R,CHIP 0-J,1/16W		C20000006M101S		
	R1653	nsp	R,CHIP 10K-J,1/16W		C20001036M111S		
	R1656	nsp	R,CHIP 10K-J,1/16W		C20001036M111S		
	R1657	nsp	R,CHIP 33-J, 1/16W		C20003306M101S		
	R1659	nsp	R,CHIP 0-J,1/16W		C20000006M101S		
	R1660	nsp	R,NETWORK A-TYPE 10-J 1/16W		C180100042100S		
	R1661	nsp	R,CHIP 0-J,1/16W		C20000006M101S		
	R1662	nsp	CHIP RES. 56-J 1/16W-1005REEL		C20005606M101S		
	R1663-1665	nsp	CHIP RES. 47-J 1/16W-1005REEL		C20004706M101S		
	R1667-1670	nsp	CHIP RES. 47-J 1/16W-1005REEL		C20004706M101S		
	R1673	nsp	R,NETWORK A-TYPE 47-J 1/16W		C180470042100S		
	R1675-1679	nsp	R,NETWORK A-TYPE 47-J 1/16W		C180470042100S		
	R1681-1689	nsp	R,NETWORK A-TYPE 47-J 1/16W		C180470042100S		
	R1691-1694	nsp	R,NETWORK A-TYPE 4.7K-J 1/16W		C180472042100S		
	R1695	nsp	CHIP RES. 56-J 1/16W-1005REEL		C20005606M101S		
	R1699,1700	nsp	R,CHIP THICK 51-D,1/16W-1608REEL		C20005101M160S		
	R1701	nsp	R,NETWORK A-TYPE 10-J 1/16W		C180100042100S		
	R1720-1728	nsp	R,CHIP 0-J,1/16W		C20000006M101S		
	R1729-1732	nsp	R,NETWORK A-TYPE 0-J*2 1/16W		C180000022100S		
	R1818,1819	963122500030D	R,CHIP THICK 1K-D,1/16W-1608REEL		C20001021M160S		
	R1820,1821	nsp	R,CHIP 10K-J,1/16W		C20001036M111S		
	R2003	nsp	R,CHIP 10K-J,1/16W		C20001036M111S		
	R2004	nsp	CHIP RES. 1KJ 1/16W1005REEL		C20001026M101S		
	R2006	nsp	R,CHIP THICK 4.7K-J,1/16W		C20004726M101S		
	R2008	nsp	R,CHIP 10K-J,1/16W		C20001036M111S		
	R2011	nsp	CHIP RES. 47-J 1/16W-1005REEL		C20004706M101S		
	R2012	nsp	R,CHIP THICK 4.7K-J,1/16W		C20004726M101S		
	R2014,2015	nsp	R,CHIP THICK 4.7K-J,1/16W		C20004726M101S		
	R2016,2017	nsp	R,CHIP 33-J, 1/16W		C20003306M101S		
	R2018	nsp	10-J,1/16W-1005REEL		C20001006M101S		
	R2019	nsp	R,CHIP 10K-J,1/16W		C20001036M111S		
	R2020	nsp	R,CHIP 33-J, 1/16W		C20003306M101S		
	R2021	nsp	CHIP RES. 1M-J 1/16W-1005REEL		C20001056M101S		
	R2022	nsp	CHIP RES. 47-J 1/16W-1005REEL		C20004706M101S		
	R2023	nsp	R,CHIP 10K-J,1/16W		C20001036M111S		
	R2024,2025	nsp	R,CHIP 0-J,1/16W		C20000006M101S		
	R2026	nsp	R,CHIP 10K-J,1/16W		C20001036M111S		
	R2027	nsp	R,CHIP 33-J, 1/16W		C20003306M101S		
	R2028	nsp	R,CHIP 10K-J,1/16W		C20001036M111S		
	R2030	nsp	R,CHIP 10K-J,1/16W		C20001036M111S		
	R2031	nsp	R,CHIP 33-J, 1/16W		C20003306M101S		
	R2032	nsp	R,CHIP 10K-J,1/16W		C20001036M111S		
	R2033	nsp	R,CHIP 33-J, 1/16W		C20003306M101S		
	R2034	nsp	R,CHIP 10K-J,1/16W		C20001036M111S		

	Ref. No.	Part No.	Part Name	Remarks		Q'ty	New
	R2035	nsp	R,CHIP 33-J, 1/16W		C20003306M101S		
	R2036	nsp	R,CHIP 10K-J,1/16W		C20001036M111S		
	R2037	nsp	R,CHIP THICK 4.7K-J,1/16W		C20004726M101S		
	R2039	nsp	R,CHIP 10K-J,1/16W		C20001036M111S		
	R2040	nsp	R,CHIP 0-J,1/16W		C20000006M101S		
	R2041	nsp	R,CHIP 10K-J,1/16W		C20001036M111S		
	R2043	nsp	R,CHIP 10K-J,1/16W		C20001036M111S		
	R2044	nsp	R,CHIP 0-J,1/16W		C20000006M101S		
	R2045	nsp	R,CHIP 10K-J,1/16W		C20001036M111S		
	R2046	nsp	R,CHIP 0-J,1/16W		C20000006M101S		
	R2048,2049	nsp	R,CHIP THICK 4.7K-J,1/16W		C20004726M101S		
	R2101	nsp	R,NETWORK A-TYPE 33-J 1/16W		C180330042100S		
	R2103-2106	nsp	R,NETWORK A-TYPE 10-J 1/16W		C180100042100S		
	R2107-2112	nsp	R,NETWORK A-TYPE 33-J 1/16W		C180330042100S		
	R2113-2118	nsp	R,NETWORK 10K-J*4 1/16W		C180103042100S		
	R2119,2120	nsp	R,NETWORK A-TYPE 33-J 1/16W		C180330042100S		
	R2201	nsp	CHIP RES. 1KJ 1/16W1005REEL		C20001026M101S		
	R2202,2203	nsp	R,CHIP 33-J, 1/16W		C20003306M101S		
	R2204-2207	nsp	CHIP RES. 150-J 1/16W-1005REEL		C20001516M101S		
	R2208	nsp	R,CHIP 33-J, 1/16W		C20003306M101S		
	R2209	nsp	CHIP RES. 3.3KJ 1/16W1005REEL		C20003326M101S		
	R2210,2211	nsp	CHIP RES. 470J 1/16W1005REEL		C20004716M101S		
	R2214	nsp	CHIP RES. 47KJ 1/16W1005REEL		C20004736M101S		
	R2215	nsp	R,CHIP THICK 330K-J,1/16W-1005REEL		C20003346M101S		
	R2216	nsp	CHIP RES. 47KJ 1/16W1005REEL		C20004736M101S		
	R2217	nsp	R,CHIP THICK 330K-J,1/16W-1005REEL		C20003346M101S		
	R2220	nsp	R,NETWORK 10K-J*4 1/16W		C180103042100S		
	R2223	nsp	CHIP RES. 1M-J 1/16W-1005REEL		C20001056M101S		
	R2224	nsp	CHIP RES. 820-J 1/16W-1005REEL		C20008216M101S		
	R2225	nsp	CHIP RES. 220-J 1/16W-1005REEL		C20002216M101S		
	R2227-2233	nsp	R,CHIP 33-J, 1/16W		C20003306M101S		
	R2234	nsp	CHIP RES. 47KJ 1/16W1005REEL		C20004736M101S		
	R2235	nsp	R,CHIP THICK 330K-J,1/16W-1005REEL		C20003346M101S		
	R2236-2238	nsp	R,CHIP 33-J, 1/16W		C20003306M101S		
	R2240-2243	nsp	R,CHIP 33-J, 1/16W		C20003306M101S		
	R2245-2255	nsp	R,CHIP 33-J, 1/16W		C20003306M101S		
	R2257-2262	nsp	R,CHIP 33-J, 1/16W		C20003306M101S		
	R2264	nsp	R,CHIP 33-J, 1/16W		C20003306M101S		
	R2265-2268	nsp	R,CHIP 10K-J,1/16W		C20001036M111S		
	R2269,2270	nsp	R,CHIP 33-J, 1/16W		C20003306M101S		
	R2271-2274	nsp	CHIP RES. 100J 1/16W1005REEL		C20001016M101S		
	R2275	nsp	R,CHIP THICK 4.7K-J,1/16W		C20004726M101S		
	R2276	nsp	CHIP RES. 1KJ 1/16W1005REEL		C20001026M101S		
	R2277,2278	nsp	R,CHIP 10K-J,1/16W		C20001036M111S		
	R2402	nsp	R,CHIP 0-J,1/16W		C20000006M101S		
	R2403	nsp	R,CHIP 33-J, 1/16W		C20003306M101S		
	R2404	nsp	CHIP RES. 1KJ 1/16W1005REEL		C20001026M101S		
	R2405	nsp	R,CHIP 10K-J,1/16W		C20001036M111S		
	R2406,2407	nsp	CHIP RES. 470J 1/16W1005REEL		C20004716M101S		
	R2410,2411	nsp	CHIP RES. 100KJ 1/16W1005REEL		C20001046M101S		
	R2412	nsp	CHIP RES. 1KJ 1/16W1005REEL		C20001026M101S		
	R2501	nsp	R,CHIP 10K-J,1/16W		C20001036M111S		
	R2502	nsp	R,CHIP 0-J,1/16W		C20000006M101S		

	Ref. No.	Part No.	Part Name	Remarks		Q'ty	New
	R2604	nsp	R,CHIP 10K-J,1/16W		C20001036M111S		
	R2605-2608	nsp	R,CHIP 33-J, 1/16W		C20003306M101S		
	R2609-2611	nsp	R,CHIP 10K-J,1/16W		C20001036M111S		
	R2612	nsp	CHIP RES. 1KJ 1/16W1005REEL		C20001026M101S		
	R2613	nsp	R,CHIP 10K-J,1/16W		C20001036M111S		
	R2615-2617	nsp	R,CHIP 33-J, 1/16W		C20003306M101S		
	R2618	nsp	R,CHIP THICK 13K-D,1/16W-1608REEL		C20001331M160S		
	R2620	nsp	R,CHIP 33-J, 1/16W		C20003306M101S		
	R2621	nsp	CHIP RES. 1M-J 1/16W-1005REEL		C20001056M101S		
	R2622	nsp	CHIP RES. 1.5K-J 1/16W-1005REEL		C20001526M101S		
	R2623-2626	nsp	R,CHIP 33-J, 1/16W		C20003306M101S		
	R2629,2630	nsp	R,CHIP 33-J, 1/16W		C20003306M101S		
	R2631,2632	nsp	10-J,1/16W-1005REEL		C20001006M101S		
	R2633	nsp	R,CHIP 0-J,1/16W		C20000006M101S		
	R2634	nsp	CHIP RES. 2.7K-J 1/16W-1005REEL		C20002726M101S		
	R2635	nsp	CHIP RES. 1.5K-J 1/16W-1005REEL		C20001526M101S		
	R2636	nsp	R,CHIP 33-J, 1/16W		C20003306M101S		
	R2640	nsp	R,CHIP THICK 4.7K-J,1/16W		C20004726M101S		
	R2641-2644	nsp	R,CHIP 33-J, 1/16W		C20003306M101S		
	R2646	nsp	R,CHIP 33-J, 1/16W		C20003306M101S		
	R2647	nsp	R,CHIP THICK 4.7K-J,1/16W		C20004726M101S		
	R2650	nsp	R,CHIP 10K-J,1/16W		C20001036M111S		
	R2651,2652	nsp	R,CHIP THICK 4.7K-J,1/16W		C20004726M101S		
	R2653	nsp	R,CHIP 0-J,1/16W		C20000006M101S		
	R2701-2703	nsp	R,NETWORK 10K-J*4 1/16W		C180103042100S		
	R2704-2706	nsp	R,NETWORK A-TYPE 33-J 1/16W		C180330042100S		
	R2707	nsp	R,CHIP 10K-J,1/16W		C20001036M111S		
	R2708	nsp	R,NETWORK 10K-J*4 1/16W		C180103042100S		
	R2709-2718	nsp	R,NETWORK A-TYPE 33-J 1/16W		C180330042100S		
	R2719	nsp	R,NETWORK A-TYPE 4.7K-J 1/16W		C180472042100S		
	R2720	nsp	R,NETWORK A-TYPE 33-J 1/16W		C180330042100S		
	R2721	nsp	R,CHIP 10K-J,1/16W		C20001036M111S		
	R2801	nsp	R,CHIP 0-J,1/16W		C20000006M101S		
	R2803	nsp	R,CHIP THICK 10-F,1/16W-1005REEL		C20001004M100S		
	R2805,2806	nsp	R,CHIP 0-J,1/16W		C20000006M101S		
	R2812-2816	nsp	R,CHIP 33-J, 1/16W		C20003306M101S		
	R2817	nsp	CHIP RES. 100J 1/16W1005REEL		C20001016M101S		
	R2819	nsp	R,CHIP 33-J, 1/16W		C20003306M101S		
	R2820	nsp	R,CHIP 10K-J,1/16W		C20001036M111S		
	R2822-2825	nsp	R,CHIP 10K-J,1/16W		C20001036M111S		
	R2826	nsp	R,CHIP THICK 1.5K-F,1/16W-1005REEL		C20001524M100S		
	R2827	nsp	CHIP RES. 1.5K-J 1/16W-1005REEL		C20001526M101S		
	R2828	nsp	R,CHIP 10K-J,1/16W		C20001036M111S		
	R2831	nsp	R,CHIP THICK 8.2K-F,1/16W-1005REEL		C20008224M101S		
	R2834	nsp	R,CHIP THICK 3.9K-F,1/16W-1005REEL		C20003924M100S		
	R2835,2836	nsp	CHIP RES. 47KJ 1/16W1005REEL		C20004736M101S		
	R2837	nsp	R,CHIP 10K-J,1/16W		C20001036M111S		
	R2838,2839	nsp	CHIP RES. 47KJ 1/16W1005REEL		C20004736M101S		
	R2841-2844	nsp	CHIP RES. 47KJ 1/16W1005REEL		C20004736M101S		
	R2845,2846	nsp	R,CHIP THICK 4.7K-J,1/16W		C20004726M101S		
	R2849	nsp	R,CHIP 10K-J,1/16W		C20001036M111S		
	R2850	nsp	R,CHIP 0-J,1/16W		C20000006M101S		
	R2851	nsp	CHIP RES. 4.7-J 1/16W-1005REEL		C2004R706M101S		

	Ref. No.	Part No.	Part Name	Remarks		Q'ty	New
	R2852,2853	nsp	10-J,1/16W-1005REEL		C20001006M101S		
	R2854-2856	nsp	R,CHIP 0-J,1/16W		C20000006M101S		
	R2859	nsp	R,CHIP 0-J,1/16W		C20000006M101S		
	R2863	nsp	CHIP RES. 100J 1/16W1005REEL		C20001016M101S		
	R3001,3002	nsp	CHIP RES. 1KJ 1/16W1005REEL		C20001026M101S		
	R3010,3011	nsp	CHIP RES. 100J 1/16W1005REEL		C20001016M101S		
	R3012	nsp	R,CHIP THICK 4.7K-J,1/16W		C20004726M101S		
	R3017	nsp	CHIP RES. 0-J 1/16W-1608REEL	N1B, N1SG	C20000006M160S		
	R3017	nsp	CHIP RES. 10K-J 1/16W-1608REEL	K1B	C20001036M160S		
	R3018	nsp	CHIP RES. 10K-J 1/16W-1608REEL	U1B	C20001036M161S		
	R3018	nsp	CHIP RES. 10K-J 1/16W-1608REEL	K1B	C20001036M160S		
	R3019-3022	nsp	R,CHIP 33-J, 1/16W		C20003306M101S		
	R3023	nsp	R,CHIP 0-J,1/16W		C20000006M101S		
	R3024-3029	nsp	R,CHIP 33-J, 1/16W		C20003306M101S		
	R3030,3031	nsp	R,CHIP 0-J,1/16W		C20000006M101S		
	R3032-3034	nsp	R,CHIP 33-J, 1/16W		C20003306M101S		
	R3035	nsp	R,CHIP THICK 4.7K-J,1/16W		C20004726M101S		
	R3037	nsp	R,CHIP 33-J, 1/16W		C20003306M101S		
	R3038	nsp	R,CHIP THICK 4.7K-J,1/16W		C20004726M101S		
	R3041	nsp	R,CHIP 0-J,1/16W		C20000006M101S		
	R3042,3043	nsp	R,CHIP 33-J, 1/16W		C20003306M101S		
	R3044	nsp	R,CHIP 10K-J,1/16W		C20001036M111S		
	R3045,3046	nsp	R,CHIP 33-J, 1/16W		C20003306M101S		
	R3048	nsp	R,CHIP 33-J, 1/16W		C20003306M101S		
	R3050	nsp	R,CHIP 33-J, 1/16W		C20003306M101S		
	R3051	nsp	R,CHIP 0-J,1/16W		C20000006M101S		
	R3058-3064	nsp	R,CHIP 33-J, 1/16W		C20003306M101S		
	R3065-3067	nsp	CHIP RES. 1KJ 1/16W1005REEL		C20001026M101S		
	R3068	nsp	R,CHIP 10K-J,1/16W		C20001036M111S		
	R3069	nsp	R,CHIP THICK 4.7K-J,1/16W		C20004726M101S		
	R3070-3076	nsp	R,CHIP 33-J, 1/16W		C20003306M101S		
	R3077,3078	nsp	R,CHIP THICK 4.7K-J,1/16W		C20004726M101S		
	R3084	nsp	R,CHIP THICK 4.7K-J,1/16W		C20004726M101S		
	R3086	nsp	R,CHIP THICK 4.7K-J,1/16W		C20004726M101S		
	R3088	nsp	R,CHIP THICK 4.7K-J,1/16W		C20004726M101S		
	R3090	nsp	R,CHIP THICK 4.7K-J,1/16W		C20004726M101S		
	R3092	nsp	R,CHIP 10K-J,1/16W		C20001036M111S		
	R3094	nsp	R,CHIP THICK 4.7K-J,1/16W		C20004726M101S		
	R3098	nsp	R,CHIP THICK 4.7K-J,1/16W		C20004726M101S		
	R3100	nsp	R,CHIP 33-J, 1/16W		C20003306M101S		
	R3201	nsp	R,CHIP THICK 4.7K-J,1/16W		C20004726M101S		
	R3202	nsp	CHIP RES. 2.2MJ 1/16W1005REEL		C20002256M101S		
	R3203	nsp	R,CHIP 10K-J,1/16W		C20001036M111S		
	R3204	nsp	CHIP RES. 100KJ 1/16W1005REEL		C20001046M101S		
	R3205	nsp	CHIP RES. 47KJ 1/16W1005REEL		C20004736M101S		
	R3206	nsp	CHIP RES. 100KJ 1/16W1005REEL		C20001046M101S		
	R3207	nsp	CHIP RES. 220KJ 1/16W1005REEL		C20002246M101S		
	R3208	nsp	CHIP RES. 27K-J 1/16W-1005REEL		C20002736M101S		
	R3209	nsp	CHIP RES. 3.3KJ 1/16W1005REEL		C20003326M101S		
	R3211	nsp	CHIP RES. 1.2K-J 1/16W-1005REEL		C20001226M101S		
	R3212-3214	nsp	R,CHIP 0-J,1/16W		C20000006M101S		
	R3215	nsp	R,CHIP THICK 4.7K-J,1/16W		C20004726M101S		
	R3216,3217	nsp	R,CHIP 33-J, 1/16W		C20003306M101S		

	Ref. No.	Part No.	Part Name	Remarks		Q'ty	New
	R3218	nsp	R,CHIP 0-J,1/16W		C20000006M101S		
	R3219	nsp	CHIP RES. 390J 1/16W1005REEL		C20003916M101S		
	R3220	nsp	CHIP RES. 100KJ 1/16W1005REEL		C20001046M101S		
	R3221	nsp	CHIP RES. 2.7K-J 1/16W-1005REEL		C20002726M101S		
	R3222	nsp	CHIP RES. 270-J 1/16W-1005REEL		C20002716M101S		
	R3223	nsp	R,CHIP THICK 470K-J,1/16W-1005REEL		C20004746M101S		
	R3224	nsp	CHIP RES. 100J 1/16W1005REEL		C20001016M101S		
	R3225	nsp	CHIP RES. 1KJ 1/16W1005REEL		C20001026M101S		
	R3226	nsp	CHIP RES. 100J 1/16W1005REEL		C20001016M101S		
	R3227	nsp	CHIP RES. 1KJ 1/16W1005REEL		C20001026M101S		
	R3228	nsp	CHIP RES. 100KJ 1/16W1005REEL		C20001046M101S		
	R3230	nsp	R,CHIP 15K-J,1/16W-1005REEL		C20001536M101S		
	R3231	nsp	CHIP RES. 100J 1/16W1005REEL		C20001016M101S		
	R3232	nsp	R,CHIP THICK 4.7K-J,1/16W		C20004726M101S		
	R3234	nsp	CHIP RES. 100J 1/16W1005REEL		C20001016M101S		
	R3235	nsp	R,CHIP THICK 120K-J,1/16W-1005REEL		C20001246M101S		
	R3237	nsp	CHIP RES. 470J 1/16W1005REEL		C20004716M101S		
	R3238	nsp	R,CHIP 10K-J,1/16W		C20001036M111S		
	R3239,3240	nsp	R,CHIP THICK 4.7K-J,1/16W		C20004726M101S		
	R3241	nsp	CHIP RES. 390J 1/16W1005REEL		C20003916M101S		
	R3242	nsp	CHIP RES. 100J 1/16W1005REEL		C20001016M101S		
	R3243	nsp	CHIP RES. 2.7K-J 1/16W-1005REEL		C20002726M101S		
	R3244	nsp	CHIP RES. 270-J 1/16W-1005REEL		C20002716M101S		
	R3245	nsp	R,CHIP THICK 120K-J,1/16W-1005REEL		C20001246M101S		
	R3247	nsp	CHIP RES. 470J 1/16W1005REEL		C20004716M101S		
	R3248	nsp	CHIP RES. 1KJ 1/16W1005REEL		C20001026M101S		
	R3249	nsp	CHIP RES. 100J 1/16W1005REEL		C20001016M101S		
	R3250	nsp	R,CHIP THICK 4.7K-J,1/16W		C20004726M101S		
	R3251	nsp	CHIP RES. 1KJ 1/16W1005REEL		C20001026M101S		
	R3252	nsp	CHIP RES. 100J 1/16W1005REEL		C20001016M101S		
	R3601	nsp	R,CHIP 0-J,1/16W		C20000006M101S		
	R3602	nsp	R,CHIP 10K-J,1/16W		C20001036M111S		
	R3603-3605	nsp	R,CHIP 0-J,1/16W		C20000006M101S		
	R3607	nsp	R,CHIP THICK 4.7K-J,1/16W		C20004726M101S		
	R3609-3611	nsp	R,CHIP THICK 4.7K-J,1/16W		C20004726M101S		
	R3625	nsp	R,CHIP 150K-D,1/16W-1608REEL		C20001541M160S		
	R3626	nsp	R,CHIP THICK 47K-D,1/16W-1608REEL		C20004731M160S		
	R3627	nsp	R,CHIP 150K-D,1/16W-1608REEL		C20001541M160S		
	R3628	nsp	R,CHIP THICK 120K-D,1/16W-1608REEL		C20001241M160S		
	R3629	nsp	R,CHIP 150K-D,1/16W-1608REEL		C20001541M160S		
	R3631	nsp	R,CHIP 150K-D,1/16W-1608REEL		C20001541M160S		
	R3632	nsp	R,CHIP THICK 300K-D,1/16W-1608REEL		C20003041M160S		
	R3633	nsp	R,CHIP 150K-D,1/16W-1608REEL		C20001541M160S		
	R3634	nsp	R,CHIP THICK 120K-D,1/16W-1608REEL		C20001241M160S		
	R3645,3646	nsp	R,CHIP THICK 0-J,1/10W		C200000060200S		
	R3647	nsp	R,CHIP 0-J,1/16W		C20000006M101S		
	R3649-3660	nsp	R,CHIP 10K-J,1/16W		C20001036M111S		
	R3661,3662	nsp	CHIP RES. 3.3KJ 1/16W1005REEL		C20003326M101S		
	R3663,3664	nsp	R,CHIP 10K-J,1/16W		C20001036M111S		
	R3666-3669	nsp	R,CHIP 10K-J,1/16W		C20001036M111S		
	R3670,3671	nsp	CHIP RES. 3.3KJ 1/16W1005REEL		C20003326M101S		
	R3672	nsp	R,CHIP 0-J,1/16W		C20000006M101S		
	R3673-3676	nsp	CHIP RES. 3.3KJ 1/16W1005REEL		C20003326M101S		

	Ref. No.	Part No.	Part Name	Remarks		Q'ty	New
	R3677	nsp	R,CHIP 10K-J,1/16W		C20001036M111S		
	R3678	nsp	R,CHIP THICK 4.7K-J,1/16W		C20004726M101S		
	R3679	nsp	CHIP RES. 47KJ 1/16W1005REEL		C20004736M101S		
	R3680	nsp	CHIP RES. 100KJ 1/16W1005REEL		C20001046M101S		
	R3681	nsp	CHIP RES. 100J 1/16W1005REEL		C20001016M101S		
	R3687,3688	nsp	CHIP RES. 22-J 1/16W-1005REEL		C20002206M101S		
	R3689-3702	nsp	R,CHIP 0-J,1/16W		C20000006M101S		
CAPACITORS GROUP							
	C1003-1007	nsp	C,CERAMIC 0.1UF-K/50V		D0111041771 01S		
	C1010	nsp	C,CERAMIC 4.7UF-K/6.3V		D0114755711 60S		
	C1016	nsp	C,CERAMIC 1000PF-K/50V		D0111021771 01S		
	C1023	nsp	C,CERAMIC 1000PF-K/50V		D0111021771 01S		
	C1025	nsp	C,CERAMIC 1000PF-K/50V		D0111021771 01S		
	C1027	nsp	C,CERAMIC 1000PF-K/50V		D0111021771 01S		
	C1029	nsp	C,CERAMIC 1000PF-K/50V		D0111021771 01S		
	C1031	nsp	C,CERAMIC 1000PF-K/50V		D0111021771 01S		
	C1251-1257	nsp	C,CERAMIC 0.1UF-K/50V		D0111041771 01S		
	C1258	nsp	C,CERAMIC 10UF-K/16V		D0111065732 00S		
	C1259	nsp	C,CERAMIC 1000PF-K/50V		D0111021771 01S		
	C1260	nsp	CER. CAP. X7R)0.01UFK/25V1005REEL		D0111031741 01S		
	C1261	nsp	C,CERAMIC 1000PF-K/50V		D0111021771 01S		
	C1262	nsp	C,CERAMIC 10UF-K/16V		D0111065732 00S		
	C1269	nsp	C,CERAMIC 10UF-K/16V		D0111065732 00S		
	C1301-1304	nsp	C,CERAMIC 0.1UF-K/50V		D0111041771 01S		
	C1305	nsp	C,CERAMIC 1000PF-K/50V		D0111021771 01S		
	C1306-1311	nsp	C,CERAMIC 0.1UF-K/50V		D0111041771 01S		
	C1312	nsp	C,CERAMIC 1000PF-K/50V		D0111021771 01S		
	C1313	nsp	C,CERAMIC 0.1UF-K/50V		D0111041771 01S		
	C1314-1321	nsp	R,CHIP 0-J,1/16W		C20000006M101S		
	C1323-1325	nsp	C,CERAMIC 0.1UF-K/50V		D0111041771 01S		
	C1327	nsp	C,CERAMIC 0.1UF-K/50V		D0111041771 01S		
	C1329-1331	nsp	C,CERAMIC 0.1UF-K/50V		D0111041771 01S		
	C1333	nsp	C,CERAMIC 0.1UF-K/50V		D0111041771 01S		
	C1335,1336	nsp	CER. CAP. X7R)0.01UFK/25V1005REEL		D0111031741 01S		
	C1337	nsp	C,CERAMIC 0.1UF-K/50V		D0111041771 01S		
	C1339	nsp	C,CERAMIC 0.1UF-K/50V		D0111041771 01S		
	C1341	nsp	C,CERAMIC 0.1UF-K/50V		D0111041771 01S		
	C1342	nsp	CER. CAP. X7R)0.01UFK/25V1005REEL		D0111031741 01S		
	C1345	nsp	CER. CAP. X7R)0.01UFK/25V1005REEL		D0111031741 01S		
	C1350	nsp	CER. CAP. X7R)0.01UFK/25V1005REEL		D0111031741 01S		
	C1351	nsp	C,CERAMIC 0.1UF-K/50V		D0111041771 01S		
	C1358	nsp	CER. CAP. X7R)0.01UFK/25V1005REEL		D0111031741 01S		
	C1361	nsp	C,CERAMIC 0.1UF-K/50V		D0111041771 01S		
	C1362	nsp	C,CERAMIC 4.7UF-K/6.3V		D0114755711 60S		
	C1364	nsp	CER. CAP. X7R)0.01UFK/25V1005REEL		D0111031741 01S		
	C1367	nsp	C,CERAMIC 0.1UF-K/50V		D0111041771 01S		
	C1369	nsp	C,CERAMIC 4.7UF-K/6.3V		D0114755711 60S		
	C1370	nsp	C,CERAMIC 1000PF-K/50V		D0111021771 01S		
	C1373	nsp	CER. CAP. X7R)0.01UFK/25V1005REEL		D0111031741 01S		
	C1377	nsp	CER. CAP. X7R)0.01UFK/25V1005REEL		D0111031741 01S		
	C1381	nsp	C,CERAMIC 0.1UF-K/50V		D0111041771 01S		

	Ref. No.	Part No.	Part Name	Remarks		Q'ty	New
	C1385	nsp	C,CERAMIC 0.1UF-K/50V		D0111041771015		
	C1387,1388	nsp	C,CERAMIC 0.1UF-K/50V		D0111041771015		
	C1391	nsp	CER. CAP. X7R)0.01UFK/25V1005REEL		D0111031741015		
	C1393	nsp	CER. CAP. X7R)0.01UFK/25V1005REEL		D0111031741015		
	C1395	nsp	C,CERAMIC 0.1UF-K/50V		D0111041771015		
	C1396	nsp	CER. CAP. X7R)0.01UFK/25V1005REEL		D0111031741015		
	C1398	nsp	C,CERAMIC 4.7UF-K/6.3V		D0114755711605		
	C1401	nsp	C,CERAMIC 0.1UF-K/50V		D0111041771015		
	C1402	nsp	CER. CAP. X7R)0.01UFK/25V1005REEL		D0111031741015		
	C1407	nsp	CER. CAP. X7R)0.01UFK/25V1005REEL		D0111031741015		
	C1410	nsp	C,CERAMIC 0.1UF-K/50V		D0111041771015		
	C1411	nsp	CER. CAP. X7R)0.01UFK/25V1005REEL		D0111031741015		
	C1412	nsp	C,CERAMIC 4.7UF-K/6.3V		D0114755711605		
	C1415	nsp	CER. CAP. X7R)0.01UFK/25V1005REEL		D0111031741015		
	C1416	nsp	C,CERAMIC 0.1UF-K/50V		D0111041771015		
	C1418	nsp	C,CERAMIC 0.1UF-K/50V		D0111041771015		
	C1419	nsp	CER. CAP. X7R)0.01UFK/25V1005REEL		D0111031741015		
	C1420,1421	nsp	C,CERAMIC 0.1UF-K/50V		D0111041771015		
	C1424	nsp	CER. CAP. X7R)0.01UFK/25V1005REEL		D0111031741015		
	C1425	nsp	C,CERAMIC 0.1UF-K/50V		D0111041771015		
	C1429	nsp	C,CERAMIC 0.1UF-K/50V		D0111041771015		
	C1430	nsp	CER. CAP. X7R)0.01UFK/25V1005REEL		D0111031741015		
	C1431	nsp	C,CERAMIC 0.1UF-K/50V		D0111041771015		
	C1434,1435	nsp	CER. CAP. X7R)0.01UFK/25V1005REEL		D0111031741015		
	C1439,1440	nsp	CER. CAP. X7R)0.01UFK/25V1005REEL		D0111031741015		
	C1441	nsp	C,CERAMIC 0.1UF-K/50V		D0111041771015		
	C1443,1444	nsp	C,CERAMIC 0.1UF-K/50V		D0111041771015		
	C1445	nsp	CER. CAP. X7R)0.01UFK/25V1005REEL		D0111031741015		
	C1446,1447	nsp	C,CERAMIC 0.1UF-K/50V		D0111041771015		
	C1448	nsp	CER. CAP. X7R)0.01UFK/25V1005REEL		D0111031741015		
	C1449	nsp	C,CERAMIC 0.1UF-K/50V		D0111041771015		
	C1450,1451	nsp	CER. CAP. X7R)0.01UFK/25V1005REEL		D0111031741015		
	C1452,1453	nsp	C,CERAMIC 0.1UF-K/50V		D0111041771015		
	C1454-1461	nsp	CER. CAP. X7R)0.01UFK/25V1005REEL		D0111031741015		
	C1462,1463	nsp	C,CERAMIC 0.1UF-K/50V		D0111041771015		
	C1464	nsp	C,CERAMIC 4.7UF-K/6.3V		D0114755711605		
	C1465	nsp	C,CERAMIC 0.1UF-K/50V		D0111041771015		
	C1466	nsp	C,CERAMIC 4.7UF-K/6.3V		D0114755711605		
	C1467	nsp	CER. CAP. X7R)0.01UFK/25V1005REEL		D0111031741015		
	C1468,1469	nsp	C,CERAMIC 0.1UF-K/50V		D0111041771015		
	C1470	nsp	CER. CAP. X7R)0.01UFK/25V1005REEL		D0111031741015		
	C1472	nsp	C,CERAMIC 4.7UF-K/6.3V		D0114755711605		
	C1474,1475	nsp	CER. CAP. X7R)0.01UFK/25V1005REEL		D0111031741015		
	C1476	nsp	C,CERAMIC 0.1UF-K/50V		D0111041771015		
	C1477,1478	nsp	CER. CAP. X7R)0.01UFK/25V1005REEL		D0111031741015		
	C1479	nsp	C,CERAMIC 4.7UF-K/6.3V		D0114755711605		
	C1480	nsp	C,CERAMIC 0.1UF-K/50V		D0111041771015		
	C1481	nsp	CER. CAP. X7R)0.01UFK/25V1005REEL		D0111031741015		
	C1482	nsp	C,CERAMIC 4.7UF-K/6.3V		D0114755711605		
	C1484	nsp	C,CERAMIC 0.1UF-K/50V		D0111041771015		
	C1485	nsp	CER. CAP. X7R)0.01UFK/25V1005REEL		D0111031741015		
	C1486-1489	nsp	C,CERAMIC 0.1UF-K/50V		D0111041771015		
	C1490	nsp	CER. CAP. X7R)0.01UFK/25V1005REEL		D0111031741015		

	Ref. No.	Part No.	Part Name	Remarks		Q'ty	New
	C1491	nsp	C,CERAMIC 0.1UF-K/50V		D0111041771015		
	C1492	nsp	CER. CAP. X7R)0.01UFK/25V1005REEL		D0111031741015		
	C1494	nsp	CER. CAP. X7R)0.01UFK/25V1005REEL		D0111031741015		
	C1495-1498	nsp	C,CERAMIC 4.7UF-K/6.3V		D0114755711605		
	C1500	nsp	C,CERAMIC 0.1UF-K/25V		D0111047741615		
	C1511,1512	nsp	C,CERAMIC 8PF-D/50V		D0100801171605		
	C1513	nsp	C,CERAMIC 1UF-K/10V		D0111057721615		
	C1514	nsp	C,CERAMIC 0.1UF-K/50V		D0111041771015		
	C1516,1517	nsp	C,CERAMIC 0.1UF-K/50V		D0111041771015		
	C1605,1606	nsp	C,CERAMIC 4.7UF-K/6.3V		D0114755711605		
	C1607-1609	nsp	C,CERAMIC 0.1UF-K/50V		D0111041771015		
	C1610	nsp	CER. CAP. X7R)0.01UFK/25V1005REEL		D0111031741015		
	C1611-1613	nsp	C,CERAMIC 0.1UF-K/50V		D0111041771015		
	C1614,1615	nsp	CER. CAP. X7R)0.01UFK/25V1005REEL		D0111031741015		
	C1616-1620	nsp	C,CERAMIC 0.1UF-K/50V		D0111041771015		
	C1621	nsp	CER. CAP. X7R)0.01UFK/25V1005REEL		D0111031741015		
	C1622,1623	nsp	C,CERAMIC 0.1UF-K/50V		D0111041771015		
	C1624	nsp	CER. CAP. X7R)0.01UFK/25V1005REEL		D0111031741015		
	C1625	nsp	C,CERAMIC 0.1UF-K/50V		D0111041771015		
	C1626-1632	nsp	CER. CAP. X7R)0.01UFK/25V1005REEL		D0111031741015		
	C1633	nsp	C,CERAMIC 4.7UF-K/6.3V		D0114755711605		
	C1634	nsp	C,CERAMIC 0.1UF-K/50V		D0111041771015		
	C1635	nsp	CER. CAP. X7R)0.01UFK/25V1005REEL		D0111031741015		
	C1636	nsp	C,CERAMIC 0.1UF-K/50V		D0111041771015		
	C1637	nsp	C,CERAMIC 4.7UF-K/6.3V		D0114755711605		
	C1639	nsp	C,CERAMIC 0.1UF-K/50V		D0111041771015		
	C1640	nsp	C,CERAMIC 4.7UF-K/6.3V		D0114755711605		
	C1642	nsp	C,CERAMIC 0.1UF-K/50V		D0111041771015		
	C1643,1644	nsp	CER. CAP. X7R)0.01UFK/25V1005REEL		D0111031741015		
	C1645	nsp	C,CERAMIC 4.7UF-K/6.3V		D0114755711605		
	C1647	nsp	C,CERAMIC 0.1UF-K/50V		D0111041771015		
	C1649	nsp	CER. CAP. X7R)0.01UFK/25V1005REEL		D0111031741015		
	C1651,1652	nsp	C,CERAMIC 4.7UF-K/6.3V		D0114755711605		
	C1653,1654	nsp	C,CERAMIC 0.1UF-K/50V		D0111041771015		
	C1656,1657	nsp	CER. CAP. X7R)0.01UFK/25V1005REEL		D0111031741015		
	C1659,1660	nsp	C,CERAMIC 4.7UF-K/6.3V		D0114755711605		
	C1661,1662	nsp	C,CERAMIC 0.1UF-K/50V		D0111041771015		
	C1663,1664	nsp	CER. CAP. X7R)0.01UFK/25V1005REEL		D0111031741015		
	C1665	nsp	C,CERAMIC 1000PF-K/50V		D0111021771015		
	C1666	nsp	C,CERAMIC 0.1UF-K/50V		D0111041771015		
	C1667	nsp	C,CERAMIC 1000PF-K/50V		D0111021771015		
	C1668,1669	nsp	C,CERAMIC 4.7UF-K/6.3V		D0114755711605		
	C1670,1671	nsp	C,CERAMIC 0.1UF-K/50V		D0111041771015		
	C1672	nsp	CER. CAP. X7R)0.01UFK/25V1005REEL		D0111031741015		
	C1673,1674	nsp	C,CERAMIC 0.1UF-K/50V		D0111041771015		
	C1675	nsp	CER. CAP. X7R)0.01UFK/25V1005REEL		D0111031741015		
	C1676	nsp	C,CERAMIC 0.1UF-K/50V		D0111041771015		
	C1677	nsp	CER. CAP. X7R)0.01UFK/25V1005REEL		D0111031741015		
	C1678	nsp	C,CERAMIC 0.1UF-K/50V		D0111041771015		
	C1679	nsp	C,CERAMIC 4.7UF-K/6.3V		D0114755711605		
	C1680	nsp	C,CERAMIC 0.1UF-K/50V		D0111041771015		
	C1681,1682	nsp	CER. CAP. X7R)0.01UFK/25V1005REEL		D0111031741015		
	C1683	nsp	C,CERAMIC 0.1UF-K/50V		D0111041771015		

	Ref. No.	Part No.	Part Name	Remarks		Q'ty	New
	C1690	nsp	C,CERAMIC 0.15uF-K/10V-1608REEL		D0111541721606		
	C1691	nsp	C,CERAMIC 0.012uF-K/50V-1608REEL		D0111231771615		
	C1692	nsp	C,CERAMIC 0.15uF-K/10V-1608REEL		D0111541721606		
	C1693	nsp	C,CERAMIC 0.012uF-K/50V-1608REEL		D0111231771615		
	C1694	nsp	CER. CAP. X7R)0.01UFK/25V1005REEL		D0111031741015		
	C1700	nsp	CER. CAP. X7R)0.01UFK/25V1005REEL		D0111031741015		
	C1702,1703	nsp	C,CERAMIC COG7PF-D/50V		D0100701171605		
	C1704	nsp	C,CERAMIC 4.7UF-K/6.3V		D0114755711605		
	C1705,1706	nsp	C,CERAMIC 1UF-K/10V		D0111057721615		
	C1707	nsp	CER. CAP. X7R)0.01UFK/25V1005REEL		D0111031741015		
	C1709,1710	nsp	C,CERAMIC 0.1UF-K/50V		D0111041771015		
	C1711	nsp	C,CERAMIC 4.7UF-K/6.3V		D0114755711605		
	C1712	nsp	C,CERAMIC 0.1UF-K/50V		D0111041771015		
	C1713	nsp	CER. CAP. X7R)0.01UFK/25V1005REEL		D0111031741015		
	C1721	nsp	C,CERAMIC 0.1UF-K/50V		D0111041771015		
	C1730	nsp	C,CERAMIC 0.1UF-K/50V		D0111041771015		
	C1801	nsp	C,CERAMIC 10UF-K/16V		D0111065732006		
	C1810-1825	nsp	C,CERAMIC 0.1UF-K/50V		D0111041771015		
	C1826	nsp	C,CERAMIC 10UF-K/16V		D0111065732006		
	C1835-1851	nsp	C,CERAMIC 0.1UF-K/50V		D0111041771015		
	C1853	nsp	C,CERAMIC 1UF-K/10V		D0111057721615		
	C1854	nsp	C,CERAMIC 0.1UF-K/50V		D0111041771015		
	C2001	nsp	C,CERAMIC 1000PF-K/50V		D0111021771015		
	C2002	nsp	C,CERAMIC 0.1UF-K/50V		D0111041771015		
	C2003	nsp	C,CERAMIC 1000PF-K/50V		D0111021771015		
	C2004	nsp	C,CERAMIC 0.1UF-K/50V		D0111041771015		
	C2005	nsp	C,CERAMIC 1000PF-K/50V		D0111021771015		
	C2006	nsp	C,CERAMIC 0.1UF-K/50V		D0111041771015		
	C2007	nsp	C,CERAMIC 1000PF-K/50V		D0111021771015		
	C2008	nsp	C,CERAMIC 0.1UF-K/50V		D0111041771015		
	C2009	nsp	C,CERAMIC 1000PF-K/50V		D0111021771015		
	C2010	nsp	C,CERAMIC 0.1UF-K/50V		D0111041771015		
	C2011,2012	nsp	C,CERAMIC 1000PF-K/50V		D0111021771015		
	C2013	nsp	C,CERAMIC 0.1UF-K/50V		D0111041771015		
	C2014-2016	nsp	C,CERAMIC 1000PF-K/50V		D0111021771015		
	C2017,2018	nsp	C,CERAMIC 0.1UF-K/50V		D0111041771015		
	C2022	nsp	C,CERAMIC 1000PF-K/50V		D0111021771015		
	C2023,2024	nsp	C,CERAMIC 0.1UF-K/50V		D0111041771015		
	C2025	nsp	C,CERAMIC 1000PF-K/50V		D0111021771015		
	C2026	nsp	C,CERAMIC 0.1UF-K/50V		D0111041771015		
	C2027	nsp	C,CERAMIC 1000PF-K/50V		D0111021771015		
	C2028	nsp	C,CERAMIC 0.1UF-K/50V		D0111041771015		
	C2029	nsp	C,CERAMIC 1000PF-K/50V		D0111021771015		
	C2030	nsp	C,CERAMIC 0.1UF-K/50V		D0111041771015		
	C2031,2032	nsp	C,CERAMIC 1000PF-K/50V		D0111021771015		
	C2033	nsp	C,CERAMIC 0.1UF-K/50V		D0111041771015		
	C2034	nsp	C,CERAMIC 1000PF-K/50V		D0111021771015		
	C2035,2036	nsp	C,CERAMIC 0.1UF-K/50V		D0111041771015		
	C2037	nsp	C,CERAMIC 1000PF-K/50V		D0111021771015		
	C2038	nsp	C,CERAMIC 0.1UF-K/50V		D0111041771015		
	C2039	nsp	C,CERAMIC 9PF-D/50V		D0110901171015		
	C2040	nsp	C,CERAMIC 1000PF-K/50V		D0111021771015		
	C2041	nsp	C,CERAMIC 0.1UF-K/50V		D0111041771015		

	Ref. No.	Part No.	Part Name	Remarks		Q'ty	New
	C2042,2043	nsp	C,CERAMIC 1000PF-K/50V		D0111021771015		
	C2044	nsp	C,CERAMIC 9PF-D/50V		D0110901171015		
	C2045	nsp	C,CERAMIC 1000PF-K/50V		D0111021771015		
	C2046	nsp	C,CERAMIC 0.1UF-K/50V		D0111041771015		
	C2047,2048	nsp	C,CERAMIC 1000PF-K/50V		D0111021771015		
	C2049-2051	nsp	C,CERAMIC 0.1UF-K/50V		D0111041771015		
	C2052	nsp	C,CERAMIC 1000PF-K/50V		D0111021771015		
	C2053	nsp	C,CERAMIC 0.1UF-K/50V		D0111041771015		
	C2054,2055	nsp	C,CERAMIC 1000PF-K/50V		D0111021771015		
	C2056	nsp	C,CERAMIC 0.1UF-K/50V		D0111041771015		
	C2057	nsp	C,CERAMIC 1000PF-K/50V		D0111021771015		
	C2058	nsp	C,CERAMIC 0.1UF-K/50V		D0111041771015		
	C2059	nsp	C,CERAMIC 1000PF-K/50V		D0111021771015		
	C2060	nsp	C,CERAMIC 0.1UF-K/50V		D0111041771015		
	C2061	nsp	C,CERAMIC 1000PF-K/50V		D0111021771015		
	C2062,2063	nsp	C,CERAMIC 0.1UF-K/50V		D0111041771015		
	C2064	nsp	C,CERAMIC 1000PF-K/50V		D0111021771015		
	C2065	nsp	C,CERAMIC 0.1UF-K/50V		D0111041771015		
	C2066	nsp	C,CERAMIC 1000PF-K/50V		D0111021771015		
	C2067,2068	nsp	C,CERAMIC 4.7UF-K/6.3V		D0114755711605		
	C2071,2072	nsp	C,CERAMIC 4.7UF-K/6.3V		D0114755711605		
	C2073-2075	nsp	C,CERAMIC 1000PF-K/50V		D0111021771015		
	C2076	nsp	C,CERAMIC 0.1UF-K/50V		D0111041771015		
	C2077	nsp	C,CERAMIC 1000PF-K/50V		D0111021771015		
	C2078	nsp	C,CERAMIC 0.1UF-K/50V		D0111041771015		
	C2079	nsp	C,CERAMIC 1000PF-K/50V		D0111021771015		
	C2080	nsp	C,CERAMIC 0.1UF-K/50V		D0111041771015		
	C2081	nsp	C,CERAMIC 1000PF-K/50V		D0111021771015		
	C2082	nsp	C,CERAMIC 0.1UF-K/50V		D0111041771015		
	C2083-2085	nsp	C,CERAMIC 1000PF-K/50V		D0111021771015		
	C2086	nsp	C,CERAMIC 0.1UF-K/50V		D0111041771015		
	C2087	nsp	C,CERAMIC 1000PF-K/50V		D0111021771015		
	C2088-2092	nsp	C,CERAMIC 0.1UF-K/50V		D0111041771015		
	C2093	nsp	C,CERAMIC 1000PF-K/50V		D0111021771015		
	C2094	nsp	C,CERAMIC 0.1UF-K/50V		D0111041771015		
	C2095	nsp	C,CERAMIC 1000PF-K/50V		D0111021771015		
	C2096	nsp	C,CERAMIC 0.1UF-K/50V		D0111041771015		
	C2097	nsp	C,CERAMIC 1000PF-K/50V		D0111021771015		
	C2098	nsp	C,CERAMIC 0.1UF-K/50V		D0111041771015		
	C2099	nsp	C,CERAMIC 1000PF-K/50V		D0111021771015		
	C2100	nsp	C,CERAMIC 0.1UF-K/50V		D0111041771015		
	C2101	nsp	C,CERAMIC 1000PF-K/50V		D0111021771015		
	C2102	nsp	C,CERAMIC 0.1UF-K/50V		D0111041771015		
	C2103-2106	nsp	C,CERAMIC 1000PF-K/50V		D0111021771015		
	C2107	nsp	C,CERAMIC 0.1UF-K/50V		D0111041771015		
	C2108	nsp	C,CERAMIC 1000PF-K/50V		D0111021771015		
	C2109	nsp	C,CERAMIC 0.1UF-K/50V		D0111041771015		
	C2110,2111	nsp	C,CERAMIC 1000PF-K/50V		D0111021771015		
	C2112	nsp	C,CERAMIC 0.1UF-K/50V		D0111041771015		
	C2113,2114	nsp	C,CERAMIC 1000PF-K/50V		D0111021771015		
	C2115	nsp	C,CERAMIC 0.1UF-K/50V		D0111041771015		
	C2203-2205	nsp	C,CERAMIC 0.1UF-K/50V		D0111041771015		
	C2206,2207	nsp	CER. CAP. X7R)0.01UFK/25V1005REEL		D0111031741015		

	Ref. No.	Part No.	Part Name	Remarks		Q'ty	New
	C2208-2210	nsp	C,CERAMIC 0.1UF-K/50V		D0111041771015		
	C2211,2212	nsp	C,CERAMIC 12PF-J/50V		D0111201671015		
	C2213,2214	nsp	C,CERAMIC 0.1UF-K/50V		D0111041771015		
	C2215	nsp	C,CERAMIC 4.7UF-K/6.3V		D0114755711605		
	C2216	nsp	C,CERAMIC 0.1UF-K/50V		D0111041771015		
	C2217	nsp	C,CERAMIC 4.7UF-K/6.3V		D0114755711605		
	C2219	nsp	C,CERAMIC 1000PF-K/50V		D0111021771015		
	C2220	nsp	C,CERAMIC 0.1UF-K/50V		D0111041771015		
	C2221	nsp	C,CERAMIC 0.022UF-K/25V		D0112237771605		
	C2222-2226	nsp	C,CERAMIC 0.1UF-K/50V		D0111041771015		
	C2228	nsp	C,CERAMIC 0.1UF-K/50V		D0111041771015		
	C2230-2237	nsp	C,CERAMIC 0.1UF-K/50V		D0111041771015		
	C2238	nsp	C,CERAMIC 1000PF-K/50V		D0111027771605		
	C2239	nsp	C,CERAMIC 0.1UF-K/50V		D0111041771015		
	C2401-2405	nsp	C,CERAMIC 0.1UF-K/50V		D0111041771015		
	C2406	nsp	C,CERAMIC 2.2UF-M/6.3V-1005REEL		D0112255811005		
	C2407	nsp	C,CERAMIC 1000PF-K/50V		D0111021771015		
	C2408	nsp	C,CERAMIC 1UF-K/10V		D0111057721615		
	C2409,2410	nsp	C,CERAMIC 1000PF-K/50V		D0111021771015		
	C2411	nsp	C,CERAMIC 4.7UF-K/6.3V		D0114755711605		
	C2412	nsp	C,CERAMIC 2.2UF-M/6.3V-1005REEL		D0112255811005		
	C2413	nsp	C,CERAMIC 1000PF-K/50V		D0111021771015		
	C2415,2416	nsp	C,CERAMIC 1000PF-K/50V		D0111021771015		
	C2417	nsp	C,CERAMIC 1UF-K/10V		D0111057721615		
	C2418	nsp	C,CERAMIC 0.1UF-K/50V		D0111041771015		
	C2419	nsp	C,CERAMIC 1000PF-K/50V		D0111021771015		
	C2420,2421	nsp	C,CERAMIC 1UF-K/10V		D0111057721615		
	C2422-2425	nsp	C,CERAMIC 1000PF-K/50V		D0111021771015		
	C2426	00D9630338606	C,ELECT 10UF-MVG/16V		D0501000834705		
	C2427-2432	nsp	C,CERAMIC 1000PF-K/50V		D0111021771015		
	C2435,2436	nsp	C,CERAMIC 1000PF-K/50V		D0111021771015		
	C2437,2438	nsp	C,CERAMIC 2200PF-K/50V		D0112221771015		
	C2439-2445	nsp	C,CERAMIC 1000PF-K/50V		D0111021771015		
	C2447	nsp	C,CERAMIC 4.7UF-K/6.3V		D0114755711605		
	C2448	nsp	C,CERAMIC 0.1UF-K/50V		D0111041771015		
	C2450	nsp	C,CERAMIC 4.7UF-K/6.3V		D0114755711605		
	C2451	963134000450S	C,ELECT 100UF-MVG/16V		D0501010836605		
	C2454-2461	nsp	C,CERAMIC X7R3900PF-K/50V		D0113927771605		
	C2465-2468	nsp	C,CERAMIC 680pF-J 50V		D0106811671605		
	C2469,2470	nsp	C,CERAMIC 470PF-J/50V		D0104711671605		
	C2471-2476	nsp	C,CERAMIC 680pF-J 50V		D0106811671605		
	C2477,2478	nsp	C,CERAMIC 470PF-J/50V		D0104711671605		
	C2479,2480	nsp	C,CERAMIC 680pF-J 50V		D0106811671605		
	C2481,2482	00D9630338606	C,ELECT 10UF-MVG/16V		D0501000834705		
	C2483-2485	nsp	C,CERAMIC0.01UF-K/50V		D0111037771605		
	C2486	963134000450S	C,ELECT 100UF-MVG/16V		D0501010836605		
	C2487	nsp	C,CERAMIC0.01UF-K/50V		D0111037771605		
	C2488	963134000450S	C,ELECT 100UF-MVG/16V		D0501010836605		
	C2601	nsp	C,CERAMIC 1000PF-K/50V		D0111021771015		
	C2602,2603	nsp	C,CERAMIC 12PF-J/50V		D0111201671015		
	C2605-2608	nsp	C,CERAMIC 4.7UF-K/6.3V		D0114755711605		
	C2609-2619	nsp	C,CERAMIC 0.1UF-K/50V		D0111041771015		
	C2620-2622	nsp	C,CERAMIC 1000PF-K/50V		D0111021771015		

	Ref. No.	Part No.	Part Name	Remarks		Q'ty	New
	C2623	nsp	C,CERAMIC 0.1UF-K/50V		D0111041771015		
	C2624	nsp	C,CERAMIC 4.7UF-K/6.3V		D0114755711605		
	C2627-2630	nsp	C,CERAMIC 4.7UF-K/6.3V		D0114755711605		
	C2631-2640	nsp	C,CERAMIC 0.1UF-K/50V		D0111041771015		
	C2641-2643	nsp	C,CERAMIC 1000PF-K/50V		D0111021771015		
	C2645	nsp	C,CERAMIC 4.7UF-K/6.3V		D0114755711605		
	C2648	nsp	C,CERAMIC 4.7UF-K/6.3V		D0114755711605		
	C2652,2653	nsp	C,CERAMIC 1000PF-K/50V		D0111021771015		
	C2657	nsp	C,CERAMIC 0.1UF-K/50V		D0111041771015		
	C2659	nsp	C,CERAMIC 0.1UF-K/50V		D0111041771015		
	C2660-2667	nsp	C,CERAMIC 1000PF-K/50V		D0111021771015		
	C2676,2677	nsp	C,CERAMIC 1000PF-K/50V		D0111021771015		
	C2678	nsp	C,CERAMIC 0.1UF-K/50V		D0111041771015		
	C2679,2680	nsp	C,CERAMIC 1000PF-K/50V		D0111021771015		
	C2801	nsp	C,CERAMIC 0.022UF-K/25V		D0112237771605		
	C2803	nsp	C,CERAMIC 1UF-K/10V		D0111057721615		
	C2806	nsp	C,CERAMIC 0.1UF-K/50V		D0111041771015		
	C2807,2808	nsp	C,CERAMIC 10PF-D/50V		D0111001171015		
	C2811	nsp	C,CERAMIC 1UF-K/10V		D0111057721615		
	C2812	nsp	C,CERAMIC 0.1UF-K/50V		D0111041771015		
	C2813	nsp	C,CERAMIC 470PF-K/50V		D0114711771015		
	C2814	nsp	C,CERAMIC 1UF-K/10V		D0111057721615		
	C2815	nsp	C,CERAMIC 1000PF-K/50V		D0111021771015		
	C2816	nsp	C,CERAMIC 1000PF-K/50V		D0111027771605		
	C2817	nsp	C,CERAMIC 4.7UF-K/6.3V		D0114755711605		
	C2818	nsp	C,CERAMIC 1000PF-K/50V		D0111027771605		
	C2819	nsp	C,CERAMIC 4.7UF-K/6.3V		D0114755711605		
	C2821	nsp	C,CERAMIC 4.7UF-K/6.3V		D0114755711605		
	C2823	nsp	C,CERAMIC 4.7UF-K/6.3V		D0114755711605		
	C2824-2828	nsp	C,CERAMIC 0.1UF-K/50V		D0111041771015		
	C2829	nsp	C,CERAMIC 4.7UF-K/6.3V		D0114755711605		
	C2831	nsp	C,CERAMIC 0.1UF-K/50V		D0111041771015		
	C2832	nsp	C,CERAMIC 1000PF-K/50V		D0111021771015		
	C2833	nsp	C,CERAMIC 0.1UF-K/50V		D0111041771015		
	C2834	nsp	C,CERAMIC 4.7UF-K/6.3V		D0114755711605		
	C2842-2845	nsp	C,CERAMIC 0.1UF-K/50V		D0111041771015		
	C2846	nsp	C,CERAMIC 1000PF-K/50V		D0111021771015		
	C2850-2852	nsp	C,CERAMIC 0.001UF-J/50V	U1B	D0101021671605		
	C2851,2852	nsp	C,CERAMIC 330PF-J/50V	N1B, N1SG, K1B	D0103311671605		
	C2853	nsp	C,CERAMIC 0.1UF-K/50V		D0111041771015		
	C3005	nsp	C,CERAMIC 4.7UF-K/6.3V		D0114755711605		
	C3007	nsp	C,CERAMIC 4.7UF-K/6.3V		D0114755711605		
	C3009	nsp	C,CERAMIC 0.1UF-K/50V		D0111041771015		
	C3010	nsp	C,CERAMIC 4.7UF-K/6.3V		D0114755711605		
	C3011-3014	nsp	C,CERAMIC 0.1UF-K/50V		D0111041771015		
	C3015,3016	nsp	C,CERAMIC 12PF-J/50V		D0111201671015		
	C3017-3019	nsp	C,CERAMIC 0.1UF-K/50V		D0111041771015		
	C3021,3022	nsp	C,CERAMIC 0.1UF-K/50V		D0111041771015		
	C3202	nsp	C,CERAMIC 220PF-K/50V		D0112211771015		
	C3205,3206	nsp	C,CERAMIC 0.1UF-K/50V		D0111041771015		
	C3210	nsp	C,CERAMIC 0.1UF-K/50V		D0111041771015		
	C3211	nsp	CER. CAP. X7R)0.01UFK/25V1005REEL		D0111031741015		

	Ref. No.	Part No.	Part Name	Remarks		Q'ty	New
	C3212	nsp	C,CERAMIC 0.1UF-K/50V		D0111041771015		
	C3213-3216	nsp	CER. CAP. X7R)0.01UFK/25V1005REEL		D0111031741015		
	C3414-3416	nsp	C,CERAMIC 1000PF-K/50V		D0111021771015		
	C3417	nsp	C,CERAMIC 100PF-J/50V		D0111011671015		
	C3418	nsp	C,CERAMIC 1000PF-K/50V		D0111021771015		
	C3419-3424	nsp	C,CERAMIC 100PF-J/50V		D0111011671015		
	C3601-3605	nsp	C,CERAMIC 0.1UF-K/50V		D0111041771015		
	C3619-3623	nsp	C,CERAMIC 10UF-K/16V		D0111065732005		
	C3625-3629	nsp	C,CERAMIC 0.01UF-K/50V		D0111031771015		
	C3631-3635	nsp	C,CERAMIC 0.1UF-K/50V		D0111041771015		
	C3637-3641	nsp	C,CERAMIC 10UF-K/16V		D0111065732005		
	C3643-3647	nsp	C,CERAMIC 10UF-K/16V		D0111065732005		
	C3649-3653	nsp	C,CERAMIC 15PF-J/50V		D0101501671605		
	C3667-3669	nsp	C,CERAMIC 1000PF-K/50V		D0111021771015		
	C3673-3676	nsp	C,CERAMIC 0.1UF-K/50V		D0111041771015		
	C3677	nsp	CER. CAP. X7R)0.01UFK/25V1005REEL		D0111031741015		
	C3678	nsp	C,CERAMIC 1000PF-K/50V		D0111021771015		
	C3682	nsp	C,CERAMIC 1000PF-K/50V		D0111021771015		
	C3695-3701	nsp	C,CERAMIC 0.1UF-K/50V		D0111041771015		
	C3744	nsp	C,CERAMIC 1UF-K/10V		D0111057721615		
	C3752	nsp	C,CERAMIC 1UF-K/10V		D0111057721615		
	C3788	nsp	C,CERAMIC X7R0.015UF-K/50V		D0111537771605		
	C3789	963134501220S	C,ELECT 470UF-MVG/6.3V (RV0)		D0504710813305		
	C3790	nsp	C,CERAMIC 0.1UF-K/50V		D0111041771015		
	C3792	nsp	C,CERAMIC 0.1UF-K/50V		D0111041771015		
	C3795	nsp	C,CERAMIC 1UF-K/10V		D0111057721615		
	C3797	nsp	C,CERAMIC 0.1UF-K/50V		D0111041771015		
	C3799	nsp	C,CERAMIC 0.1UF-K/50V		D0111041771015		
	C3804	nsp	C,CERAMIC 0.1UF-K/50V		D0111041771015		
OTHERS PARTS GROUP							
	L1251-1253	nsp	R,CHIP THICK 0-J,1/10W		C2000000602005		
	L1301-1313	nsp	COIL,BEAD BLM21PG221SN1		D3402012122105		
	L1602	nsp	COIL,BEAD BLM21PG221SN1		D3402012122105		
	L1605-1615	nsp	COIL,BEAD BLM21PG221SN1		D3402012122105		
	L1617-1619	nsp	COIL,BEAD BLM21PG221SN1		D3402012122105		
	L1801	nsp	COIL,BEAD BLM21PG221SN1		D3402012122105		
	L2601-2603	nsp	COIL,BEAD BLM21PG221SN1		D3402012122105		
	L2801,2802	nsp	COIL,CHIP DLW21SN900HQ2L		D3112012190005		
	L2804	nsp	R,CHIP THICK 0-J,1/10W		C2000000602005		
	L2806	nsp	COIL,CHIP DLW21SN181SQ2L		D3112012118105		
	L2807-2810	nsp	COIL,BEAD CBW201209U221T		D3402012022105		
	L2812	nsp	COIL,BEAD CBW160808U121T		D3401608112105		
	L2813	nsp	CHIP RES. 0-J 1/16W-1608REEL	U1B	C20000006M160S		
	L2814 , L2815	nsp	CHIP RES. 0-J 1/16W-1609REEL	U1B	C20000006M161S		
	L2814 , L2815	nsp	CHIP RES. 1.5UH-J 1/16W-1608REEL	N1B, N1SG, K1B	D3111608115205		
	L3401-3404	nsp	R,CHIP THICK 0-J,1/10W		C2000000602005		
	L3601-3610	nsp	R,CHIP THICK 0-J,1/10W		C2000000602005		
	L3613-3622	nsp	R,CHIP THICK 0-J,1/10W		C2000000602005		
	L3625-3627	nsp	COIL,BEAD BLM21PG221SN1		D3402012122105		

	Ref. No.	Part No.	Part Name	Remarks		Q'ty	New
	L3628	nsp	COIL,BEAD CBW160808U121T		D3401608112105		
	X1301	141810045507S	CRYSTAL CHIP FCX-04(27MHz)		E80527R000080S		
	X1601	141810045507S	CRYSTAL CHIP FCX-04(27MHz)		E80527R000080S		
	X2001	943141100020S	CRYSTAL CHIP FCX-04(21.875MHz)		E80521R875080S		
	X2201	141810046500S	CRYSTAL CHIP FCX-04(24.576MHz)		E80524R576080S		
	X2601	141810049509S	CRYSTAL CHIP FCX-04(24MHz)		E80524R000080S		
	X3001	00D3991038900	CRYSTAL CHIP FCX-03(12MHz)		E805120000020S		
	N1001	963643100120S	HDMI CONNECTOR 19P		L109100190160S		
	U1001	236810057606S	IC LOGIC ADV3002BSTZ		J040300205510S		
	N1002	963643100120S	HDMI CONNECTOR 19P		L109100190160S		
	N1003	963643100120S	HDMI CONNECTOR 19P		L109100190160S		
	N1004	963643100120S	HDMI CONNECTOR 19P		L109100190160S		
	N1251	nsp	CN.WAFER AD3PBJ19GO-REV_B		L109100190170S		
	U1251	nsp	IC,LOGIC AD8195		J040819505510S		
	N1252	nsp	CN.FPC 23P		L130100162330S		
	N1301	nsp	CN.FPC 23P		L130100162330S		
	U1301	943239100760S	IC,LOGIC TC74VHC4051AFT TOSHIBA		J040744051360S		
	N1302	963643100120S	HDMI CONNECTOR 19P		L109100190160S		
	U1302	963236101220D	IC,LOGIC ADV7850 HDMI 1.4A		J040785005510S		
	U1303	00D2623436907	IC,LOGIC TC74VHC244FT		J040742445530S		
	U1601	963236101320S	IC,LOGIC-ENCODER ADV8003-3		J045800303010S		
	N1602	963643100120S	HDMI CONNECTOR 19P		L109100190160S		
	U1602	963248100710S	IC MEMORY FLASH (MX25L6406EM2I-12G)		J005256401210S		
	U1801	nsp	IC,MEMORY-RAM K4T51163QJ-BCE7		J001451163370S		
	U1802	nsp	IC,MEMORY-RAM K4T51163QJ-BCE7		J001451163370S		
	U2001	nsp	IC ANALOG ADSP21487KSWZ-3B3020		J080214875530S		
	U2002	943246012690S	IC MEMORY-RAM(W9864G6JH-6)		J001986466010S		
	U2003	963248101020P	8952390000040 DNSC3900 IC MEMORY FLASH (EN29LV160BB-70TIP)		J005291600050S		
	K2201	963646012340S	TER,RCA 2PIN 206A-07		G601206A0700YS		
	U2201	00D9630237503	MODULE JSR1165-C		E100116500040S		
	U2202	00D9630237503	MODULE JSR1165-C		E100116500040S		
	U2203	236810062608S	IC,LOGIC-INTERFACE LC89058WA-E		J046890580030S		
	U2204	00D2623077900	IC TC74VHCU04FT		J040740405580S		
	U2205	943236100020S	IC EPM3032A-TC44		J003303205510S		
	U2206	00D2623437906	IC TC74VHCT244AFT		J040742445540S		
	U2207	963239002150S	IC SN74LVC244APWR		J040742440230S		
	U2401	943239100690S	IC,LOGIC-D/A CONVER PCM5100		J042510005510S		
	U2402	231310009508S	IC PQ033DNA1ZPH		J126033010010S		
	U2403	236810086505S	IC AK5358BET-E2		J043535805520S		
	U2404	236810073509S	IC AK4358VQ-L		J042435800010S		
	U2406	00D2631289900	IC AZ4580M		J121458000020S		
	U2407	00D2631289900	IC AZ4580M		J121458000020S		
	U2408	00D2631289900	IC AZ4580M		J121458000020S		
	U2409	00D2631289900	IC AZ4580M		J121458000020S		
	U2602	nsp	IC,ANALOG DM860A NETWORKED		J080860A05510S		
	U2603	nsp	IC MEMORY FLASH (H27U1G8F2BTR)		J005270820020S		
	U2604	963246100740D	IC, MEMORY-RAM A3V56S30FTP-G6		J001030563060S		
	U2605	963246100740D	IC, MEMORY-RAM A3V56S30FTP-G6		J001030563060S		
	N2801	nsp	CN.WAFER 5P 20010-05		L101200100510S		

NOTE
When update Firmware, please confirm a last version in SDI.
Use the service board after updating it.

	Ref. No.	Part No.	Part Name	Remarks		Q'ty	New
	N2802	963643100130S	JACK,MODULAR RJ45		G4060RJ450120S		
	U2802	nsp	IC,LINEAR-DRIVER LAN8720A		J127872005510S		
	U2803	00D2623711004	IC LOGIC SAA7121H		J0457121000010S		
	U2805	nsp	IC,LOGIC-DECODER MFI337S3959		J0443373959010S		
	U2806	nsp	IC,LINEAR-DRIVER NCP380HMU		J127380150010S		
	U3001	963262012150M	MODULE REMOCON R94EV1A		E9409410036100S		
	K3002	00D9630244703	JACK,D3.5 EARPHONE		G40130802000YS		
	U3002	963243101110S	IC CPU MICRO PROCESS (R5F56108VNFP)		8952500700010		
	U3003	943239100720S	IC,MEMORY-EEPROM R1EX24256BSAS0A		J0002425655700S		
	U3202	00D2623437906	IC TC74VHCT244AFT		J0407424455400S		
	N3401	nsp	CN,WAFER C125Z2-13		L109012521320S		
	N3402	nsp	CN,WAFER C125Z2-09		L109012520920S		
	N3403	nsp	CN.WAFER C125Z2-31		L109012523120S		
	N3404	nsp	CN.WAFER C125Z2-317P		L109012520720S		
	N3405	nsp	CN.WAFER 5P 20010-05		L101200100510S		
	N3406	nsp	CN,WAFER C125Z2-07 7P		L109012520720S		
	N3407	nsp	CN,WAFER C125Z2-23 23P		L109012522320S		
	N3408	nsp	CN.FPC 40P 10022HS-40C		L130100220400S		
	N3601	nsp	CN.WAFER 5P SMW250-5P		L102050010040S		
	U3601	nsp	IC EX3AV		J0480300300010S		
	U3602	nsp	IC EX3AV		J0480300300010S		
	U3603	nsp	IC EX3AV		J0480300300010S		
	U3604	nsp	IC EX3AV		J0480300300010S		
	U3605	nsp	IC EX3AV		J0480300300010S		
	U3607	231310009508S	IC PQ033DNA1ZPH		J1260330100010S		
	U3608	943239100730S	IC,LINEAR-RESET PST8448UR		J1258448000010S		
		nsp	BRACKET SR5007U1B SPTH		40102155660000S		

NOTE
When update Firmware, please confirm a last version in SDI. Use the service board after updating it.

RS232 PCB UNIT ASS'Y

	Ref. No.	Part No.	Part Name	Remarks		Q'ty	New
SEMICONDUCTORS GROUP							
	IC804	00D2631289900	IC AZ4580M		J1214580000020S		
	IC4700	00D2631286903	IC PQ120DNA1ZPH 12V 1A		J1261200100010S		
	IC4701	2368100905048	IC ILX3232D		J0463232000020S		
	IC4702	2313100095088	IC PQ033DNA1ZPH		J1260330100010S		
	Q4700	943215500020S	TR 2SA RT1P141C		J5201014112105		
	Q4701	943216500020S	TR 2SC RT1N141C		J5221014112105		
	Q4702,4703	943215500020S	TR 2SA RT1P141C		J5201014112105		
	Q4704	943214500020S	TR 2SC 2SC3052		J5223052000505		
	Q4705	943216500020S	TR 2SC RT1N141C		J5221014112105		
	D4700	963201500170D	D,SWITCHING CHIP LBAS16HT1G FAST		K0050414802305		
	D4703	963201500170D	D,SWITCHING CHIP LBAS16HT1G FAST		K0050414802305		
	ZD4700	963202500400S	D,ZENER ZJ16B-0.5W/5MA-52MM SEMTECH		K06016R0445225		
CAPACITORS GROUP							
	C4701	nsp	C,CERAMIC 4.7UF-K/6.3V		D0114755711605		
	C4702,4703	00D2544573981	C,ELECT 10UF-M/50V		D0401000870705		
	C4704-4706	nsp	C,CERAMIC 0.1UF-K/50V		D0111045771605		
	C4707	00D2544573981	C,ELECT 10UF-M/50V		D0401000870705		
	C4709	nsp	C,CERAMIC 0.1UF-K/50V		D0111045771605		
	C4711,4712	nsp	C,CERAMIC 0.1UF-K/50V		D0111045771605		
	C4714	nsp	C,CERAMIC 0.1UF-K/50V		D0111045771605		
	C4716,4717	nsp	C,CERAMIC 0.1UF-K/50V		D0111045771605		
	C4718,4719	nsp	C,CERAMIC 33PF-J/50V		D0103301671605		
	C4725,4726	nsp	C,CERAMIC 1UF-K/16V		D0111051731615		
	C4727-4729	nsp	C,CERAMIC 0.1UF-K/50V		D0111045771605		
	C4730,4731	00D2544573981	C,ELECT 10UF-M/50V		D0401000870705		
	C4733	00D2544573981	C,ELECT 10UF-M/50V		D0401000870705		
	C4734	nsp	C,CERAMIC 470PF-J/50V		D0104711671605		
	C4737-4739	nsp	C,CERAMIC 0.1UF-K/50V		D0111045771605		
	C4742	nsp	C,CERAMIC 470PF-J/50V		D0104711671605		
	C4743	00D2544573981	C,ELECT 10UF-M/50V		D0401000870705		
	C4745,4746	00D2544573981	C,ELECT 10UF-M/50V		D0401000870705		
OTHERS PARTS GROUP							
	CN4702	nsp	CN,WAFER C125Z2-07 7P		L1090125207205		
	CP4700	nsp	CN,WAFER C125Z1-09 9P		L1090125109205		
	CP4701	nsp	CN,WAFER C125Z1-13 13P		L1090125113205		
	CP4702	nsp	CN,WAFER C125Z1-07 7P		L1090125107205		
	JACK4700	00D9630244703	JACK,D3.5 EARPHONE		G40130802000YS		
	JACK4701	963646012090S	TER RCA 2PIN RCA-206B-02(OR,OR)		G601206B0200YS		
	JACK4702	00D2051305006	CN.WAFER 9P		L1030900900305		
	JACK4703	963643012080M	JACK,DIN DIN-901B(MXJACK)		G403901B0000YS		