anko

Portable Bluetooth® Speaker

User Manual

K: 43-499-861 | T:70-363-814
MODEL: CW2-24010

Includes:

- Portable Bluetooth® Speaker
- USB-A to USB-C Charging Cable
- User Manual

12 month warranty

Thank you for your purchase.

Your new product is warrantied to be free from defects in materials and workmanship for the period stated above, from the date of purchase, provided that the product is used in accordance with accompanying recommendations or instructions where provided. This warranty is in addition to your rights under the Australian Consumer Law.
For New Zealand customers, this warranty is in addition to statutory rights observed under New Zealand legislation.

We will provide you with your choice of a refund, repair (where possible) or exchange (availability dependent) for this product if it becomes defective within the warranty period. The business will bear the reasonable expense of claiming the warranty.
This warranty will no longer apply where the defect is a result of alteration, accident, misuse, abuse or neglect.

Please retain your receipt as proof of purchase and contact our Customer Service Centre as listed below, for the entity you purchased this product from, for any difficulties with your product. Warranty claims and claims for expense incurred in returning this product can be addressed to the respective Customer Service Centre.

Our goods come with guarantees that cannot be excluded under the Australian Consumer Law. You are entitled to a replacement or refund for a major failure and compensation for any other reasonably foreseeable loss or damage. You are also entitled to have the goods repaired or replaced if the goods fail to be of acceptable quality and the failure does not amount to a major failure.

Statement

- This product shall not be connected to power supply source exceeding PS1 (5V d.c. 1A).
- Battery cannot be subjected to high or low extreme temperatures, low air pressure at high altitude during use, storage or transportation.
- Disposal of a battery into fire or a hot oven, or mechanically crushing or cutting of a battery, that can result in an explosion.
- Leaving a battery in an extremely high temperature surrounding environment that can result in an explosion or the leakage of flammable liquid or gas.
- A battery subjected to extremely low air pressure that may result in an explosion or the leakage of flammable liquid or gas.
- The apparatus is only suitable for mounting at height < 2m.
- The marking located on the bottom of the apparatus.

Contact for Kmart purchases	Contact for Target purchases
Kmart Australia Ltd. C/- Customer Service Centre 690 Springvale Road, Mulgrave Vic 3170 Customer Service: 1800 124 125 (Australia) or 0800 945 995 (New Zealand) or via Customer Help at kmart.com.au	Target Australia Pty Ltd C/- Customer Service Centre 2 Kendall Street, Williams Landing, Vic. 3027 Customer Service: 1300 753 567 or via Customer Help at target.com.au/help/contact-us

Function overview:

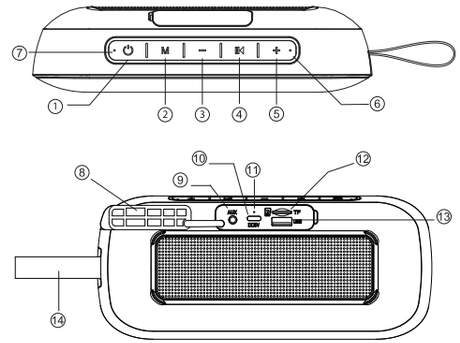

1. Power ON/OFF
2. Switch Bluetooth Mode/TF Mode/ USB -A Audio/AUX Mode
3. Volume Down/Previous Song
4. Play/Pause Answer/hang up call
5. Volume Up/Next Song
6. MIC
7. Bluetooth Indicator
8. Silicone Cover
9. AUX-IN Port
10. USB-C Charging Port
11. Charging Indicator
12. TF Card Slot
13. USB-A Input
14. Hand Strap

How to use this speaker:

Function Operation

Power ON/OFF Long press ⏻ button 2 seconds

Play/Pause Short press ⏮ button

Previous Song Long press — key for 2 seconds to skip the track

Next Song Long press + key for 2 seconds to skip the track.

Volume Down Short press — key to decrease the volume

Volume Up Short press + key to increase the volume

Specifications:

Model no:
CW2-24010

Version:
Bluetooth V5.3

Working distance:
10 Meters

Output:
RMS 4.5W*2 (THD≤10%)

Music time:
Approx 3-4 hours(80% volume)

Charging voltage:
DC⎓ 5V

Battery capacity:
3.7V 1500mAh

Charge time:
Approx 2 hours

IP rating
IP44

Power ON/OFF Button

- Press and hold ON/OFF button,the blue indicator light will flash. The device is powered on and enters Bluetooth mode automatically.

Switch Mode

- Click M to switch Bluetooth Mode/TF Mode/USB Audio/AUX Mode. No matter which mode(Bluetooth Mode/TF Mode/USB Audio/AUX Mode)you switch, you can hear the prompt tone to enter the mode then hear the music.
(It should be TF card/USB-A external devices/AUX-in cable plugged in, the corresponding mode can be switched)

Play/Pause Button

- Short press to play/pause music.
- When a call comes in, press the play/pause button to answer the call, and long press to reject the call.During a call, short press the Play/ Pause button to end the call.

Bluetooth Mode

- Once the speaker is powered on, will automatically enter Bluetooth mode in several seconds and blue indicator light flashes.
- Search for "anko43499861" (Bluetooth name) and connect from Bluetooth menu on the media device.
- Once the speaker is successfully paired and connected, you will hear a prompt tone.
- When the device is turned on again, it will automatically reconnect to Bluetooth as it was last time.

AUX Function

- Use a 3.5mm audio cable(not included) to connect your device through the AUX IN port.You will hear a prompt tone,Choose the music from your media device and play.

TF Card Play

- Insert a TF card into the TF card slot, the speaker will play music automatically from the TF card.Supports playback of the following audio formats: WAV/MP3,maximum support 32GB.

USB-A Input

- Insert the USB drive into the USB port, the speaker will play music automatically from the USB drive.Supports playback of the following audio formats: WAV/MP3,maximum support 32GB.
Note:USB port does not support charging.

Charging

- This Speaker is powered by rechargeable Lithium battery. Please use provided USB-C cable for charging (Plug the USB-C end to the device charging port and the other USB-A end plug into a minimum 5V/1A charger)The LED indicator displays red while charging and light off when fully charged.

Using the environment & storage environment

- Operating environment
  Temperature: -5 ˚C~45 ˚C
- Storage environment
  Temperature: -20˚C~60 ˚C

The Bluetooth® word mark and logos are registered trademarks owned by Bluetooth® SIG, Inc., and any use of such marks by KMART AUSTRALIA is under licence.

R-NZ