Service Schematics

Introduction

NOKIA 6300

Important:

This document is intended for use by authorized service centers only.

RM-217/RM-222

"Service Schematics" was created with focus on customer care.
The purpose of this document is to provide further technical repair information for NOKIA mobile phones on Level 3/4 service activities.
It contains additional information such as e.g. "Component finder", "Frequency band table" or "Antenna switch table".
The "Signal overview" page gives a good and fast overview about the most important signals and voltages on board.
Saving process time and improving the repair quality is the aim of this document.
It is to be used additionaly to the service manual and other training or service information such as Service Bulletins.

All measurements were made using following equipment:

Nokia repair SW	:	Phoenix version 2006.34.2.156
Oscilloscope	:	Fluke PM 3380A/B
Spectrum Analyzer	:	Advanced R3162 with an analog probe
RF-Generator/GSM Tester	:	Rhode & Schwarz CMU 200
Multimeter	:	Fluke 73 Series II

While every endeavour has been made to ensure the accuracy of this document, some errors may exist. If the reader finds any errors, NOKIA should be notified in writing.

Please send E-Mail to: **training.sace@nokia.com**

Table of contents

Frontpage	1
AV connector, Mini USB, Charger jack	2
RETU, SIM, Audio	3
TAHVO	4
RAPGSM, Combo, microSD	5
FM radio, Bluetooth	6
User Interface	7
Camera	8
RF Part	9
Signal overview	10
Component finder	11

Copyright © NOKIA
This material , including documentation and any related computer programs is protected by copyright, controlled by NOKIA. All rights are reserved. Copying, including reproducing, modifying, storing, adapting or translating any or all of this material requires the prior written consent of NOKIA. This material also contains confidential information, which may not be disclosed to others whitout the prior written consent of NOKIA.

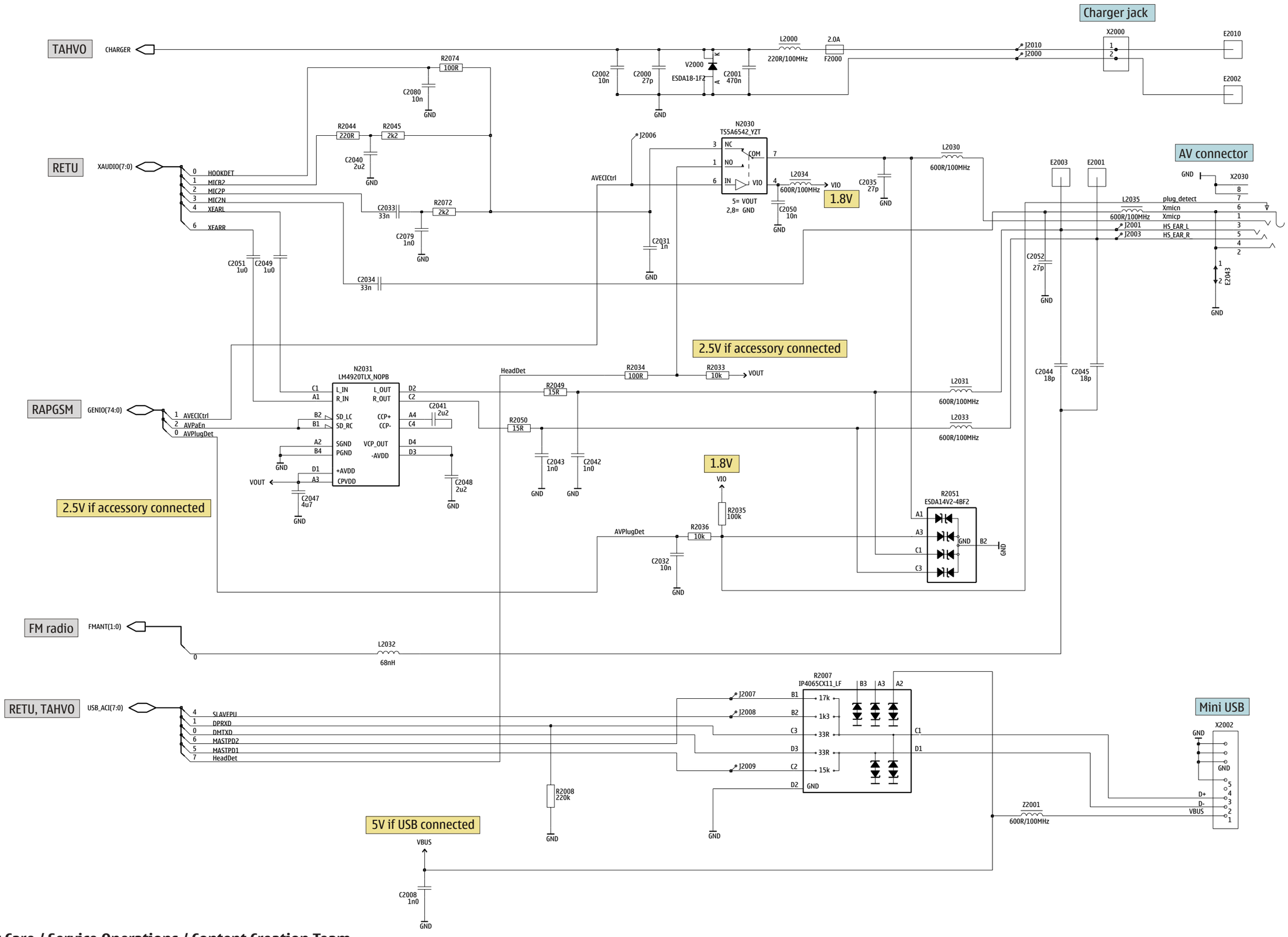
Charger jack
TAHVO
CHARGER
X2000
E2010
E2002
J2010
J2000
L2000
220R/100MHz
2.0A
F2000
V2000
ESDA18-1F2
C2002
10n
C2000
27p
C2001
470n
R2074
100R
C2080
10n
GND
RETU
XAUDIO(7:0)
HOOKDET
MICB2
MICP
MICN
XEARL
XEARR
R2044
220R
R2045
2k2
C2040
2u2
C2033
33n
R2072
2k2
C2079
1n0
C2051
1u0
C2049
1u0
C2034
33n
J2006
AVECICtrl
N2030
TS5A6542_YZT
NC
NO
IN
COM
VIO
5= VOUT
2,8= GND
L2034
600R/100MHz
C2050
10n
C2031
1n
1.8V
C2035
27p
L2030
600R/100MHz
AV connector
E2003
E2001
X2030
L2035
plug_detect
Xmicn
Xmicp
600R/100MHz
J2001
HS_EAR_L
J2003
HS_EAR_R
E2043
C2052
27p
C2044
18p
C2045
18p
2.5V if accessory connected
RAPGSM
GENIO(74:0)
AVECICtrl
AVPaEn
AVPlugDet
N2031
LM4920TLX_NOPB
L_IN
R_IN
SD_LC
SD_RC
SGND
PGND
+AVDD
CPVDD
L_OUT
R_OUT
CCP+
CCP-
VCP_OUT
-AVDD
C2041
2u2
C2048
2u2
C2047
4u7
VOUT
HeadDet
R2034
100R
R2033
10k
R2049
15R
R2050
15R
C2043
1n0
C2042
1n0
L2031
600R/100MHz
L2033
600R/100MHz
1.8V
R2035
100k
R2036
10k
C2032
10n
R2051
ESDA14V2-4BF2
FM radio
FMANT(1:0)
L2032
68nH
RETU, TAHVO
USB_ACI(7:0)
SLAVEPU
DPRXD
DMTXD
MASTPD2
MASTPD1
HeadDet
R2007
IP4065CX11_LF
J2007
J2008
J2009
17k
1k3
33R
33R
15k
R2008
220k
Mini USB
X2002
D+
D-
VBUS
Z2001
600R/100MHz
5V if USB connected
C2008
1n0

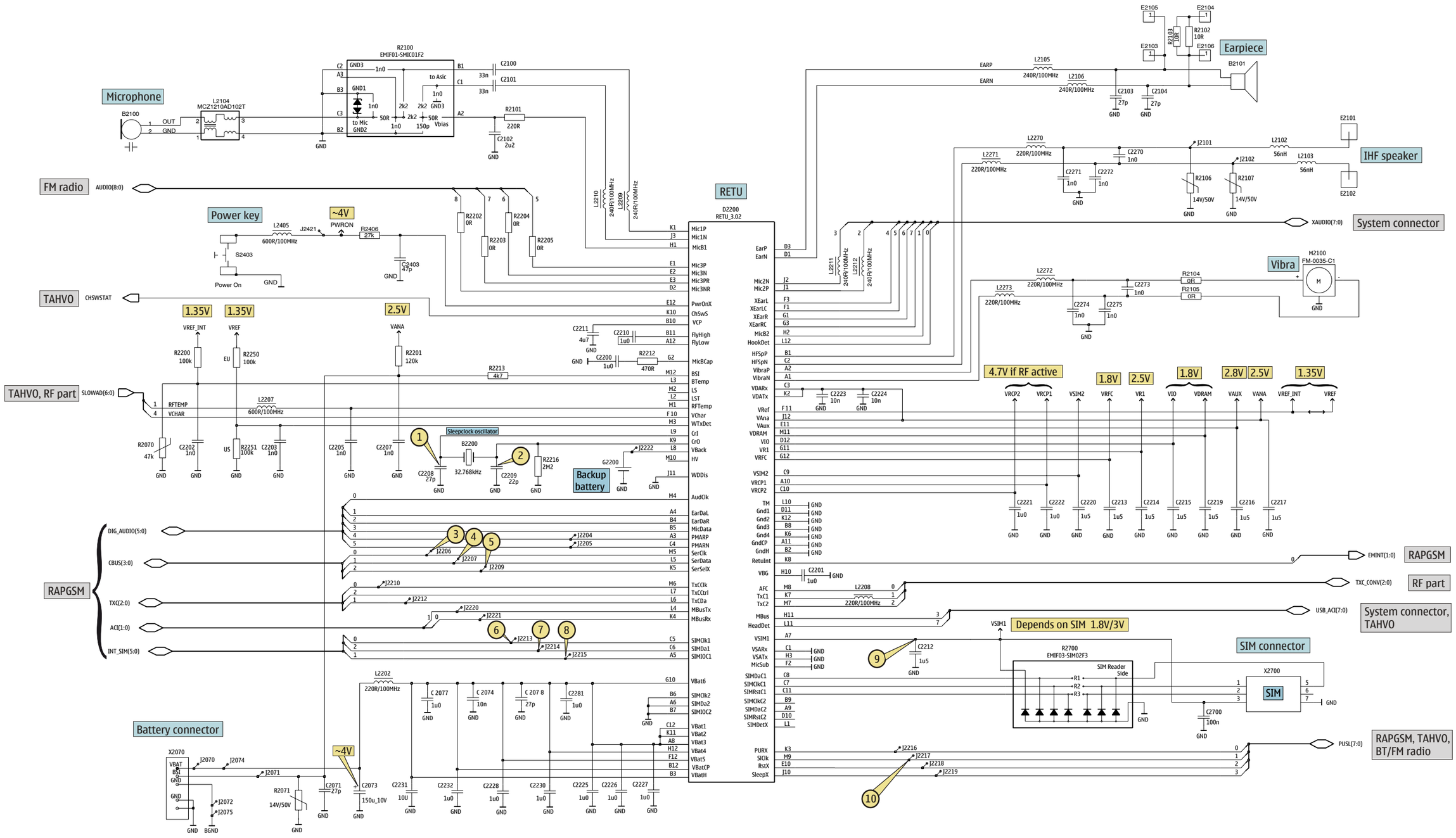
Microphone
Earpiece
FM radio
Power key
TAHVO
TAHVO, RF part
RAPGSM
Battery connector
RETU
IHF speaker
System connector
Vibra
Sleepclock oscillator
Backup battery
4.7V if RF active
Depends on SIM 1.8V/3V
SIM connector
RAPGSM
RF part
System connector, TAHVO
RAPGSM, TAHVO, BT/FM radio

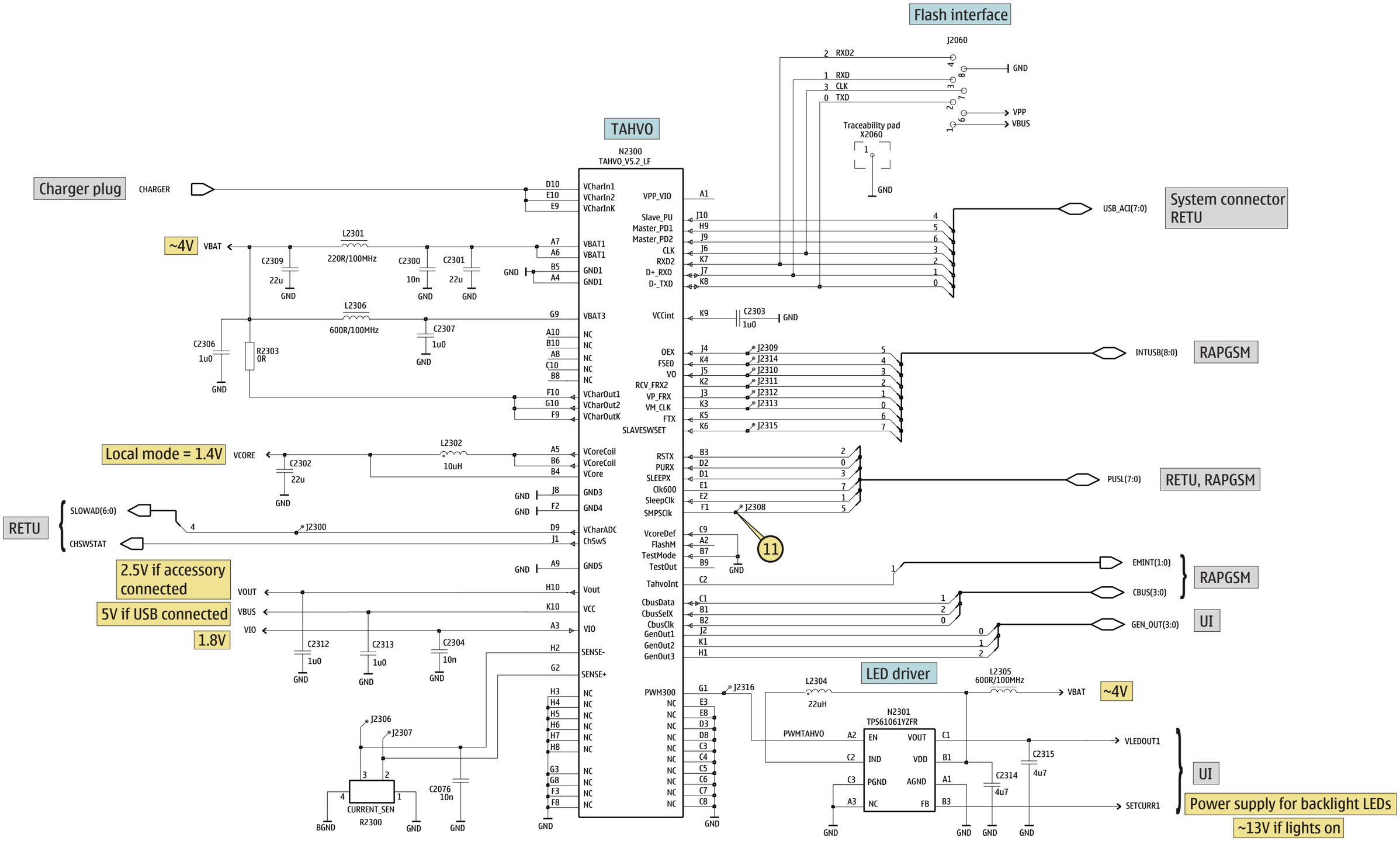
Flash interface
J2060
Traceability pad
X2060
TAHVO
N2300
TAHVO_V5.2_LF
Charger plug
CHARGER
~4V
VBAT
System connector
RETU
USB_ACI(7:0)
RAPGSM
INTUSB(8:0)
Local mode = 1.4V
VCORE
RETU, RAPGSM
PUSL(7:0)
RETU
SLOWAD(6:0)
CHSWSTAT
2.5V if accessory connected
5V if USB connected
1.8V
VOUT
VBUS
VIO
EMINT(1:0)
CBUS(3:0)
RAPGSM
GEN_OUT(3:0)
UI
LED driver
N2301
TPS61061YZFR
PWMTAHVO
VLEDOUT1
SETCURR1
UI
Power supply for backlight LEDs
~13V if lights on
CURRENT_SEN
R2300
BGND
GND

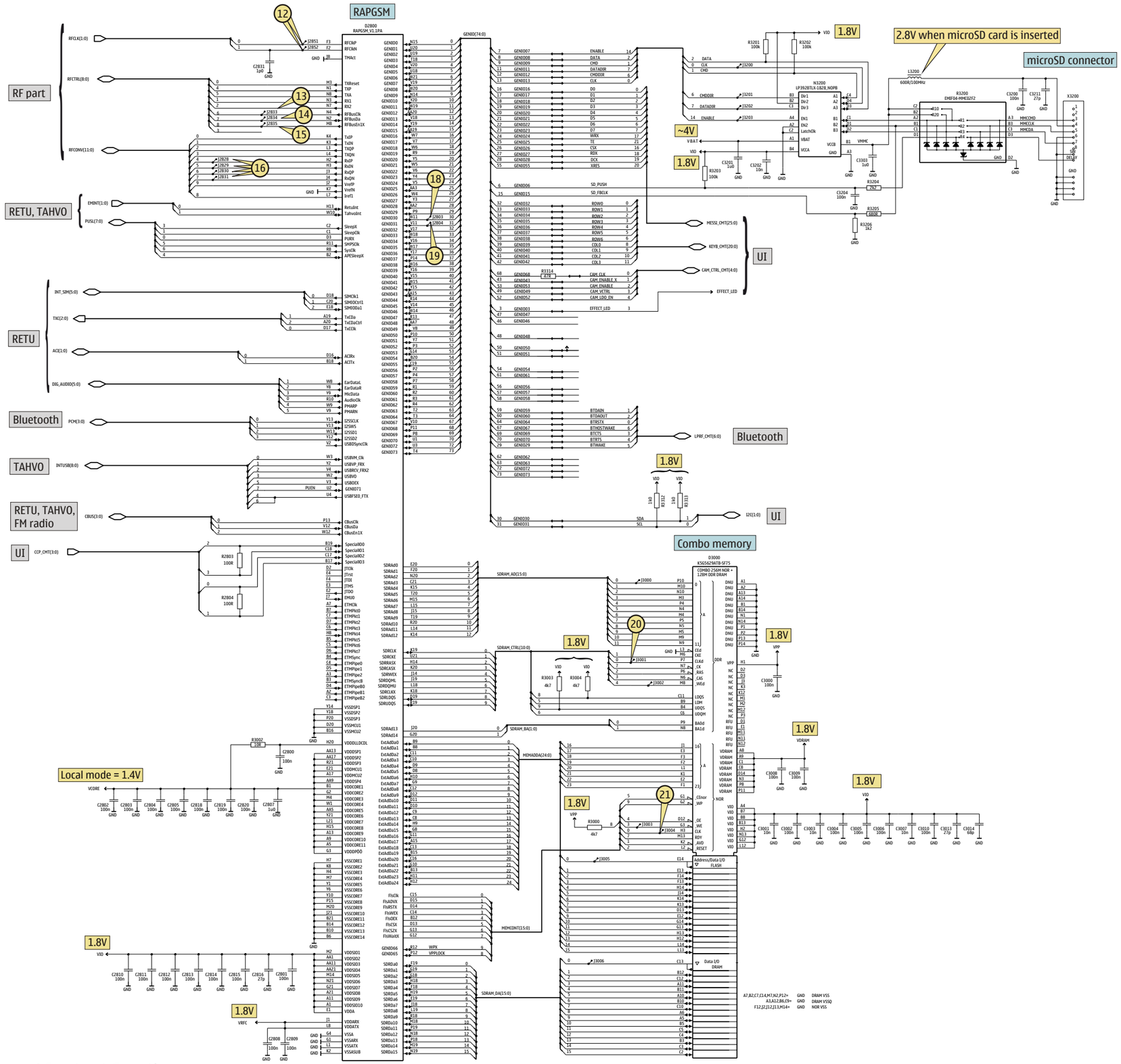
RAPGSM
RF part
RETU, TAHVO
RETU
Bluetooth
TAHVO
RETU, TAHVO, FM radio
UI
Local mode = 1.4V
1.8V
~4V
2.8V when microSD card is inserted
microSD connector
UI
Bluetooth
Combo memory

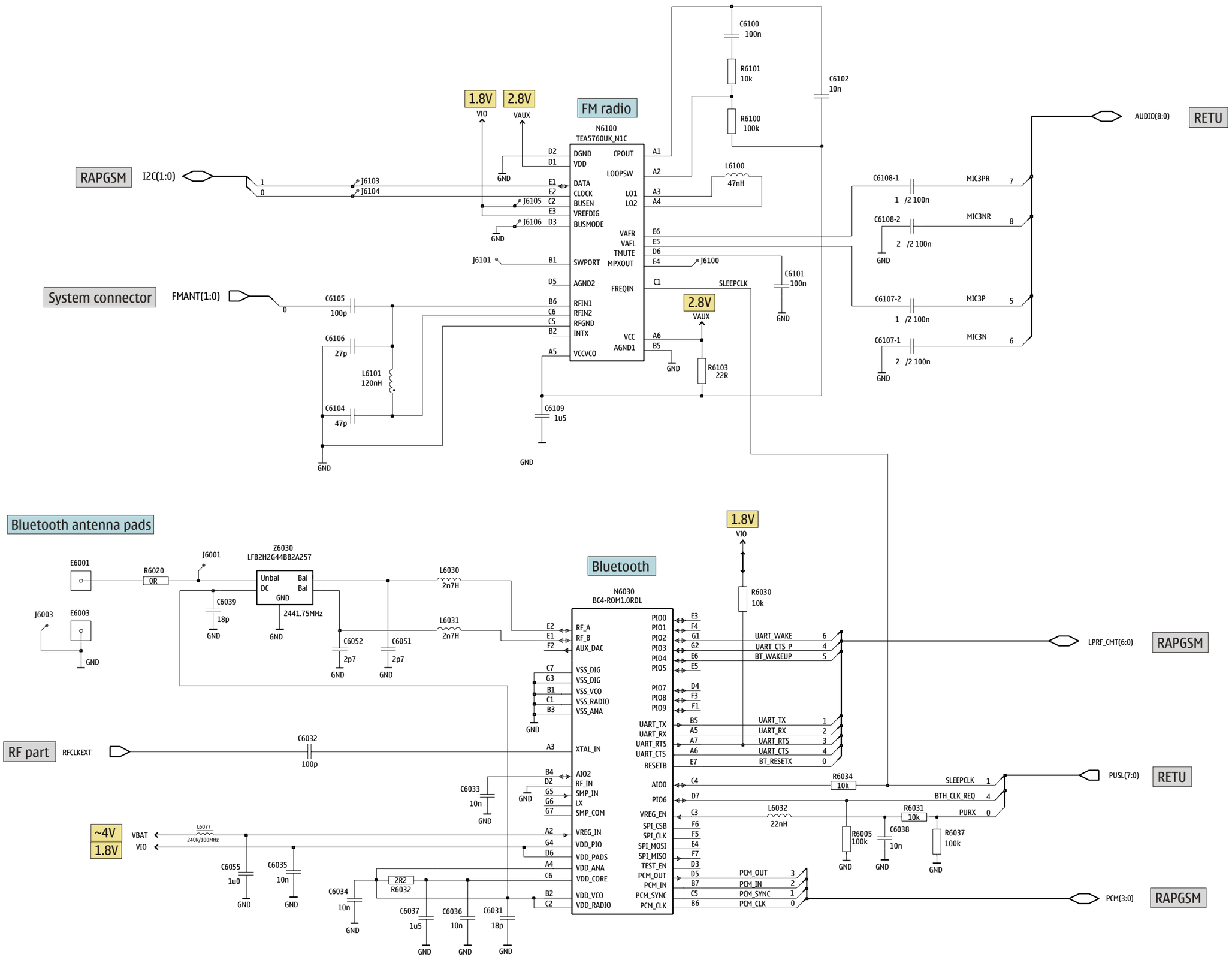
FM radio
N6100
TEA5760UK_N1C
1.8V
VIO
2.8V
VAUX
RAPGSM
I2C(1:0)
J6103
J6104
J6105
J6106
J6101
J6100
System connector
FMANT(1:0)
C6105
100p
C6106
27p
L6101
120nH
C6104
47p
C6109
1u5
C6100
100n
R6101
10k
R6100
100k
C6102
10n
L6100
47nH
C6101
100n
R6103
22R
C6108-1
C6108-2
C6107-2
C6107-1
/2 100n
MIC3PR
MIC3NR
MIC3P
MIC3N
AUDIO(8:0)
RETU
GND
Bluetooth antenna pads
E6001
E6003
J6001
J6003
R6020
0R
Z6030
LFB2H2G44BB2A257
Unbal
DC
Bal
Bal
GND
2441.75MHz
C6039
18p
L6030
2n7H
L6031
2n7H
C6052
2p7
C6051
2p7
Bluetooth
N6030
BC4-ROM1.0RDL
R6030
10k
LPRF_CMT(6:0)
RAPGSM
UART_WAKE
UART_CTS_P
BT_WAKEUP
UART_TX
UART_RX
UART_RTS
UART_CTS
BT_RESETX
RF part
RFCLKEXT
C6032
100p
XTAL_IN
C6033
10n
~4V
VBAT
1.8V
VIO
L6077
240R/100MHz
C6055
1u0
C6035
10n
C6034
10n
2R2
R6032
C6037
1u5
C6036
10n
C6031
18p
R6034
10k
SLEEPCLK
BTH_CLK_REQ
PURX
PUSL(7:0)
RETU
L6032
22nH
R6031
10k
R6005
100k
C6038
10n
R6037
100k
PCM_OUT
PCM_IN
PCM_SYNC
PCM_CLK
PCM(3:0)
RAPGSM

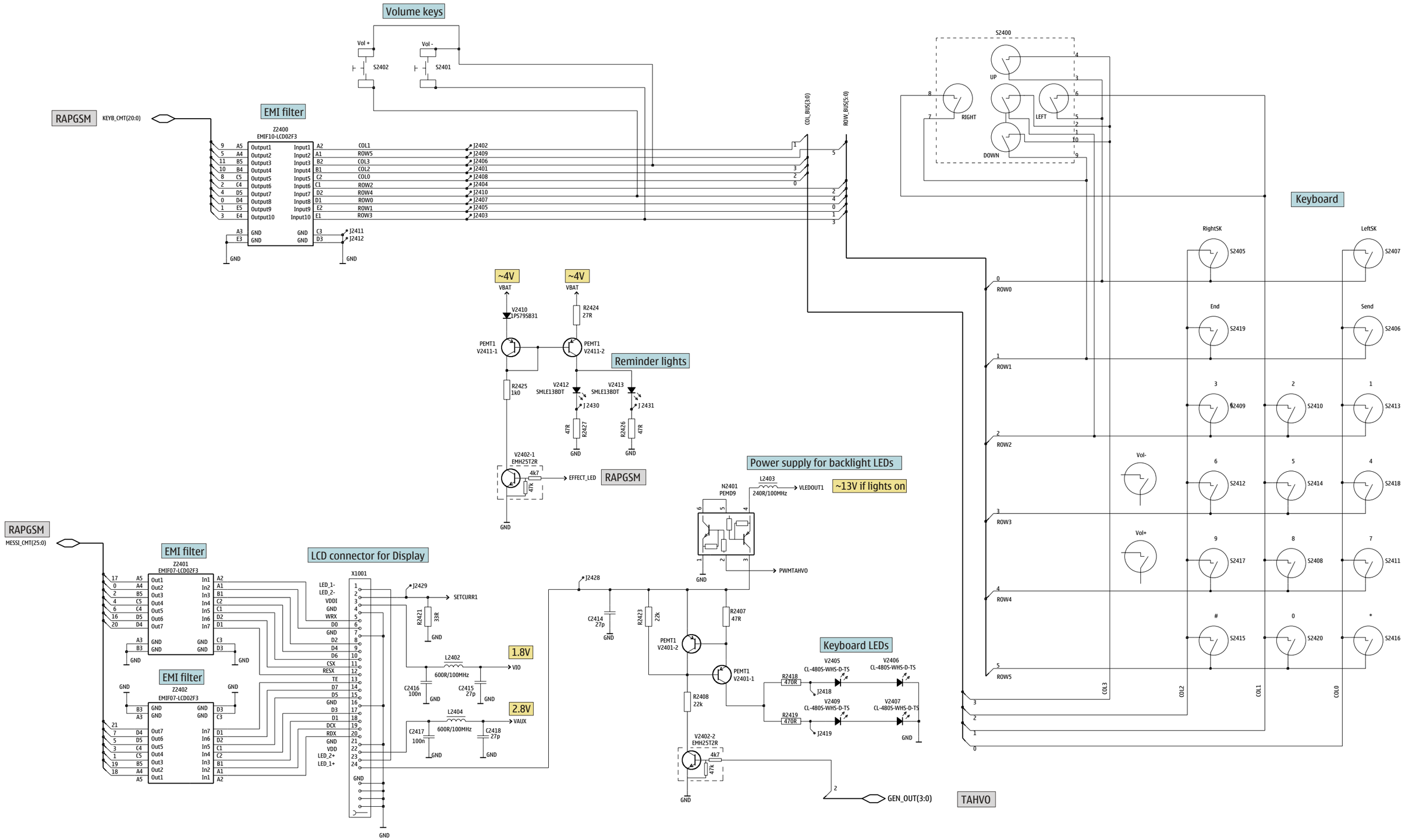

Confidential Copyright © 2006 NOKIA Only for training purposes

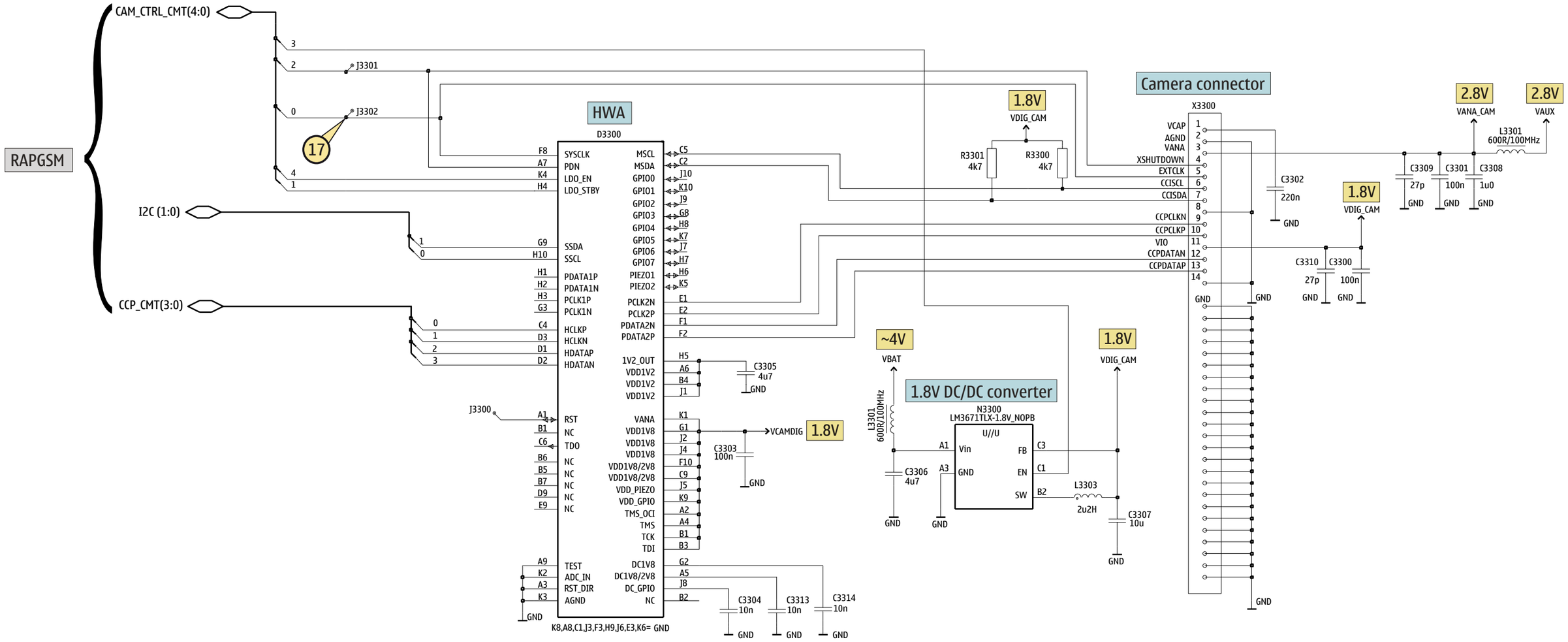
RAPGSM
CAM_CTRL_CMT(4:0)
I2C (1:0)
CCP_CMT(3:0)
J3301
J3302
17
HWA
D3300
SYSCLK
PDN
LDO_EN
LDO_STBY
SSDA
SSCL
PDATA1P
PDATA1N
PCLK1P
PCLK1N
HCLKP
HCLKN
HDATAP
HDATAN
RST
NC
TDO
TEST
ADC_IN
RST_DIR
AGND
MSCL
MSDA
GPIO0
GPIO1
GPIO2
GPIO3
GPIO4
GPIO5
GPIO6
GPIO7
PIEZO1
PIEZO2
PCLK2N
PCLK2P
PDATA2N
PDATA2P
1V2_OUT
VDD1V2
VANA
VDD1V8
VDD1V8/2V8
VDD_PIEZO
VDD_GPIO
TMS_OCI
TMS
TCK
TDI
DC1V8
DC1V8/2V8
DC_GPIO
K8,A8,C1,J3,F3,H9,J6,E3,K6= GND
C3305
4u7
VCAMDIG
1.8V
C3303
100n
C3304
10n
C3313
10n
C3314
10n
1.8V
VDIG_CAM
R3301
4k7
R3300
4k7
Camera connector
X3300
VCAP
AGND
VANA
XSHUTDOWN
EXTCLK
CCISCL
CCISDA
CCPCLKN
CCPCLKP
VIO
CCPDATAN
CCPDATAP
GND
C3302
220n
2.8V
VANA_CAM
2.8V
VAUX
L3301
600R/100MHz
C3309
27p
C3301
100n
C3308
1u0
C3310
27p
C3300
100n
~4V
VBAT
1.8V DC/DC converter
N3300
LM3671TLX-1.8V_NOPB
U//U
Vin
GND
FB
EN
SW
C3306
4u7
L3303
2u2H
C3307
10u

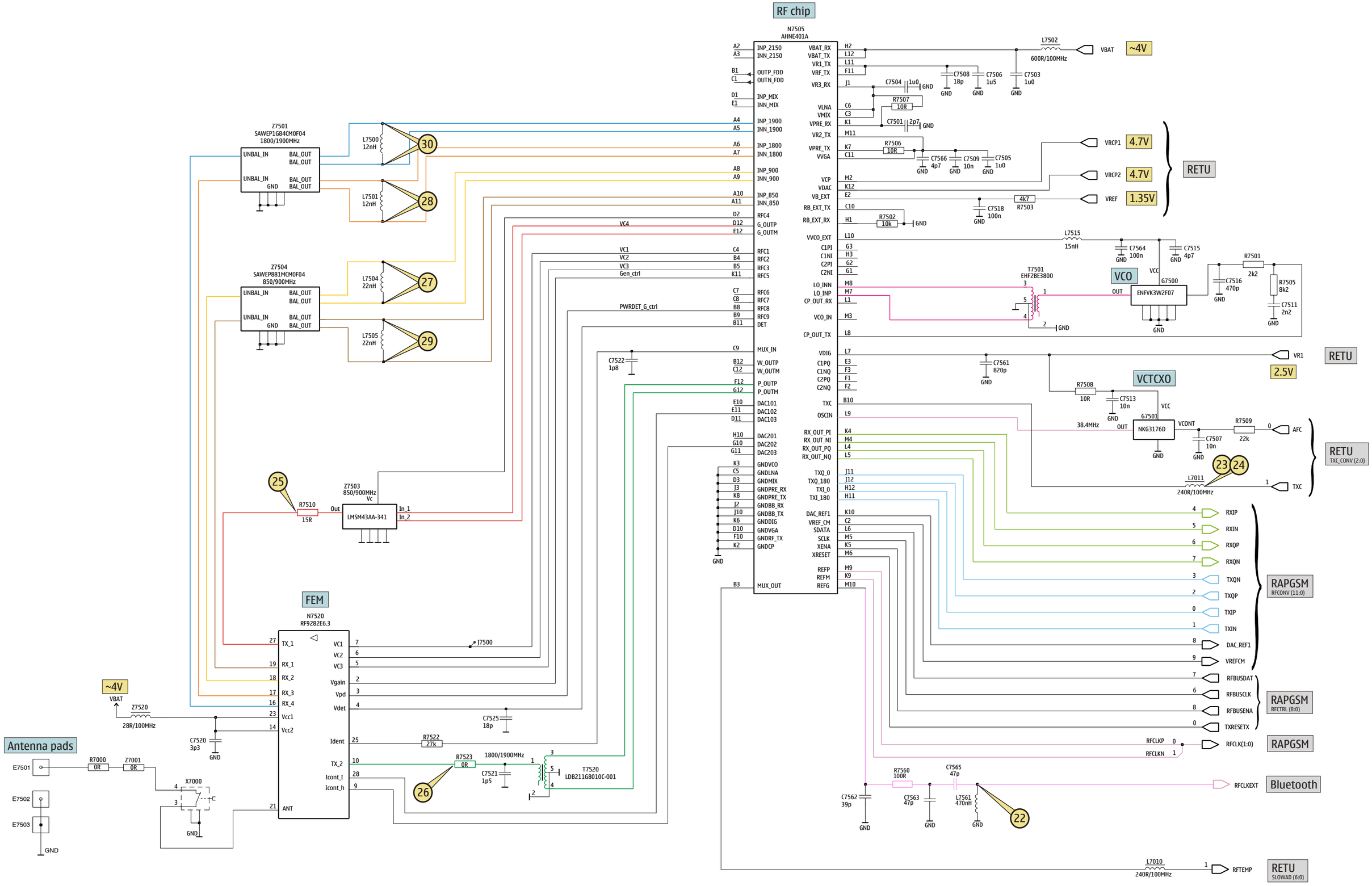
RF chip
N7505
AHNE401A
Z7501
SAWEP1G84CM0F04
1800/1900MHz
Z7504
SAWEP881MCM0F04
850/900MHz
Z7503
850/900MHz
LMSM43AA-341
FEM
N7520
RF9282E6.3
Antenna pads
VCO
VCTCX0
RETU
RAPGSM
Bluetooth
~4V
4.7V
1.35V
2.5V
VBAT
VREF
VRCP1
VRCP2
VR1
AFC
TXC
RXIP
RXIN
RXQP
RXQN
TXQN
TXQP
TXIP
TXIN
DAC_REF1
VREFCM
RFBUSDAT
RFBUSCLK
RFBUSENA
TXRESETX
RFCLK(1:0)
RFCLKEXT
RFTEMP
RFCLKP
RFCLKN
38.4MHz
1800/1900MHz
T7520
LDB211G8010C-001
T7501
EHF2BE3800
ENFVK3W2F07
NKG3176D
LMSM43AA-341

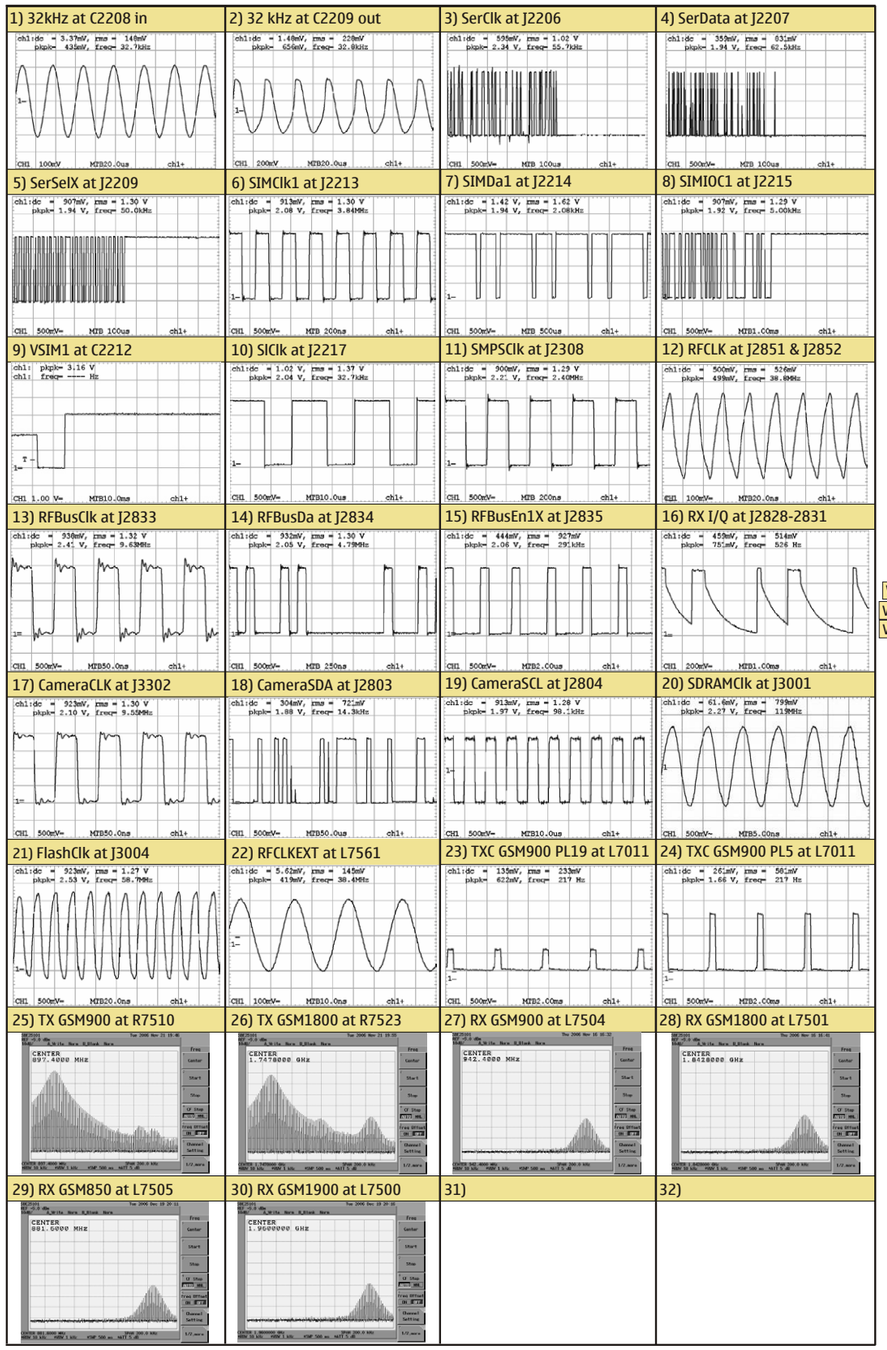
1) 32kHz at C2208 in
2) 32 kHz at C2209 out
3) SerClk at J2206
4) SerData at J2207
5) SerSelX at J2209
6) SIMClk1 at J2213
7) SIMDa1 at J2214
8) SIMIOC1 at J2215
9) VSIM1 at C2212
10) SIClk at J2217
11) SMPSClk at J2308
12) RFCLK at J2851 & J2852
13) RFBusClk at J2833
14) RFBusDa at J2834
15) RFBusEn1X at J2835
16) RX I/Q at J2828-2831
17) CameraCLK at J3302
18) CameraSDA at J2803
19) CameraSCL at J2804
20) SDRAMClk at J3001
21) FlashClk at J3004
22) RFCLKEXT at L7561
23) TXC GSM900 PL19 at L7011
24) TXC GSM900 PL5 at L7011
25) TX GSM900 at R7510
26) TX GSM1800 at R7523
27) RX GSM900 at L7504
28) RX GSM1800 at L7501
29) RX GSM850 at L7505
30) RX GSM1900 at L7500
31)
32)

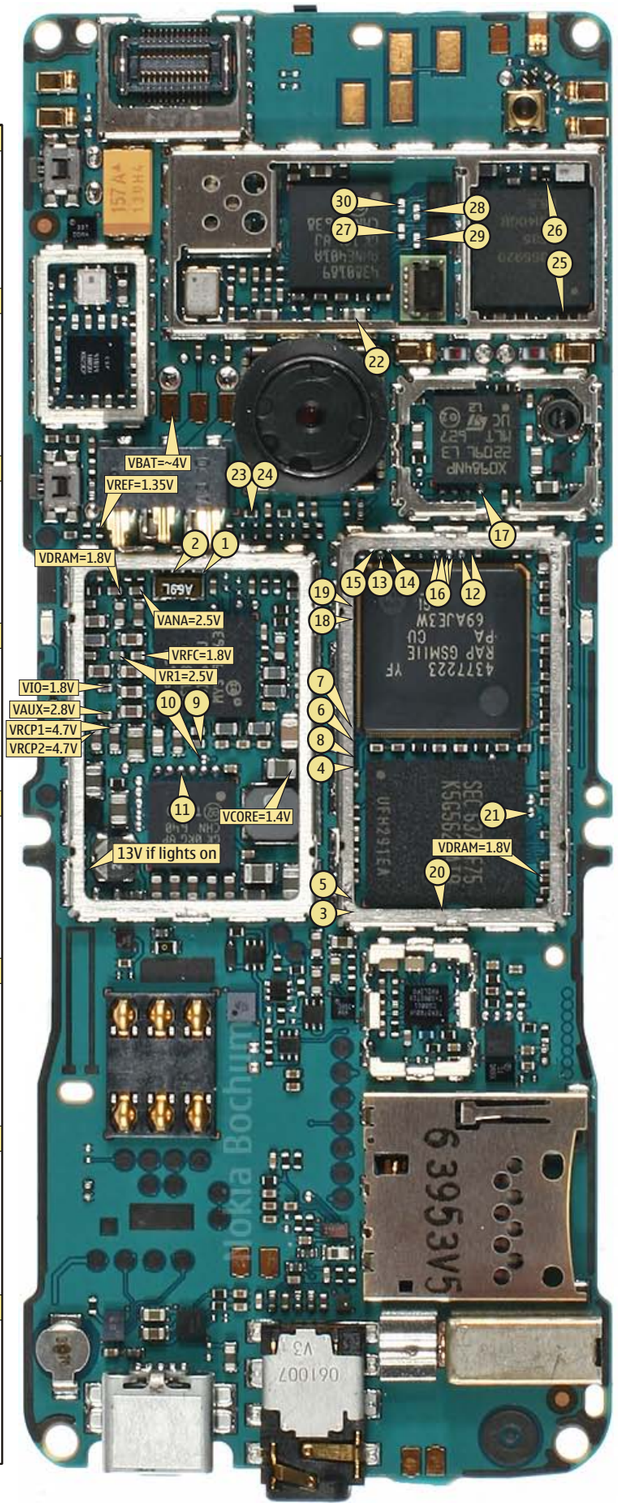
VBAT=~4V
VREF=1.35V
VDRAM=1.8V
VANA=2.5V
VRFC=1.8V
VR1=2.5V
VIO=1.8V
VAUX=2.8V
VRCP1=4.7V
VRCP2=4.7V
VCORE=1.4V
13V if lights on
VDRAM=1.8V

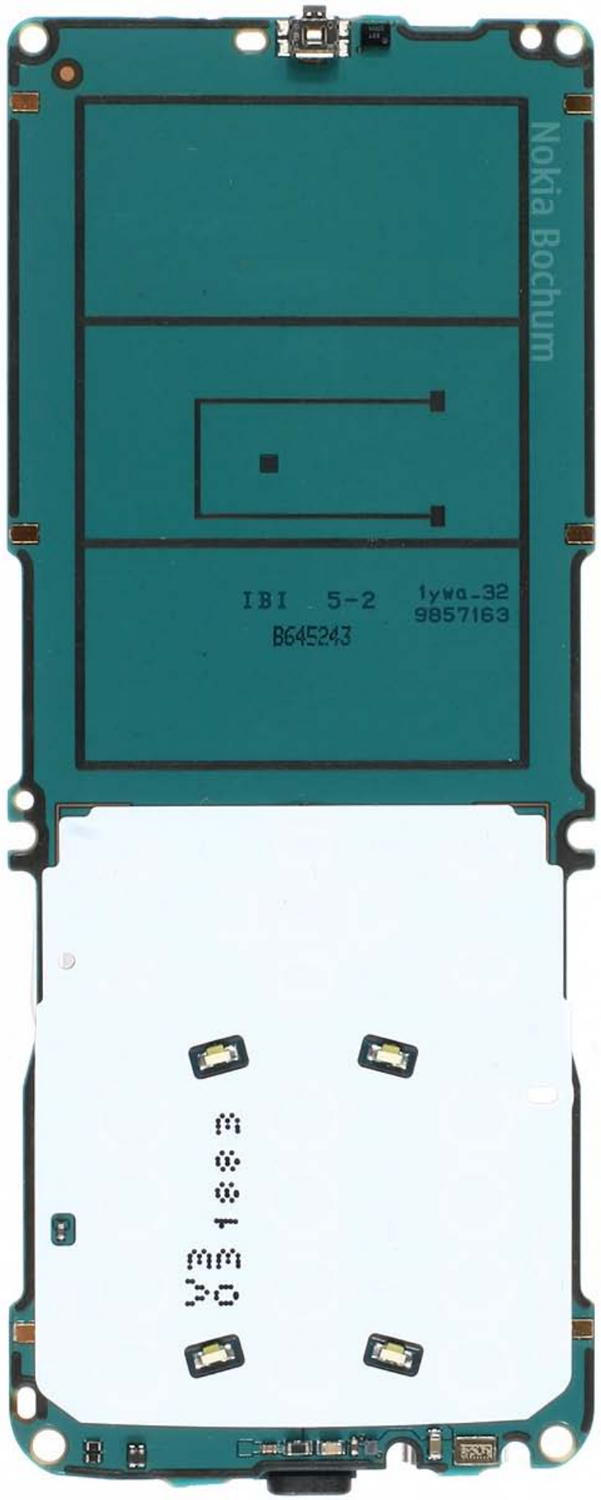
Nokia Bochum
IBI 5-2
1ywa-32
9857163
B645243

B		C2272	L5	C3300	P6	D3300	O7	J2310	J3	J7500	T8	R2035	D5	R6100	G7
B2100	B8	C2273	K4	C3301	N5	**E**		J2311	K3	**L**		R2036	D5	R6101	G7
B2101	T6	C2274	K4	C3302	N4	E2001	D4	J2312	K3	L2000	A5	R2044	H5	R6102	H7
B2200	M3	C2275	K4	C3303	O8	E2002	A6	J2313	K3	L2030	C5	R2045	E5	R6103	G6
C		C2281	L2	C3304	O8	E2003	D4	J2314	K3	L2031	C4	R2049	D4	R6104	G7
C2000	A4	C2300	J4	C3305	O6	E2010	A7	J2315	J3	L2032	D5	R2050	C4	R6105	G6
C2001	A3	C2301	I4	C3306	O8	E2070	P3	J2316	K2	L2033	D5	R2051	C5	R7001	T8
C2002	A5	C2302	K5	C3307	O8	E2071	P3	J2401	C2	L2034	D5	R2052	C4	R7002	T8
C2008	C2	C2303	I3	C3308	N5	E2075	P4	J2402	C8	L2035	C5	R2070	E2	R7501	R4
C2030	E5	C2304	K4	C3309	N5	E2101	Q6	J2403	D2	L2102	Q7	R2071	N2	R7502	S5
C2031	E5	C2305	I2	C3310	P6	E2102	Q9	J2404	D2	L2103	Q8	R2072	E4	R7503	Q5
C2032	D5	C2306	I4	C3313	O8	E2103	U6	J2405	C8	L2104	A7	R2074	E5	R7505	R4
C2033	E4	C2307	I4	C3314	P8	E2104	T6	J2406	C8	L2105	O2	R2100	H5	R7506	R5
C2034	E4	C2309	I5	C6020	T2	E2105	U7	J2407	D8	L2106	O2	R2101	H5	R7507	S5
C2035	C5	C2312	I3	C6031	R1	E2106	T6	J2408	B8	L2202	M2	R2102	T5	R7508	R4
C2040	H5	C2313	I3	C6032	P2	E2401	C9	J2409	C2	L2207	N4	R2103	T5	R7509	Q4
C2041	C3	C2314	J2	C6033	P2	E2402	C1	J2410	D2	L2208	N4	R2104	A8	R7510	Q8
C2042	D4	C2315	K2	C6034	P2	E2403	N1	J2411	D8	L2209	M5	R2105	A8	R7522	Q8
C2043	C4	C2317	J2	C6035	P1	E2405	T9	J2412	C2	L2210	M5	R2106	N5	R7523	S8
C2044	C4	C2403	N2	C6036	P2	E2407	N9	J2418	I5	L2211	M4	R2107	N5	R7560	Q6
C2045	D5	C2404	T2	C6037	P2	E2506	T1	J2419	H5	L2212	M4	R2200	M2	**S**	
C2046	C4	C2405	T4	C6038	Q1	E6001	T1	J2421	N2	L2270	L4	R2201	N2	S2401	O1
C2047	C4	C2413	I2	C6039	Q2	E6003	T1	J2428	J1	L2271	L4	R2202	M5	S2402	S1
C2048	C3	C2414	T2	C6040	P2	E7000	U8	J2429	N1	L2272	K4	R2203	M5	S2403	U5
C2049	H5	C2415	T4	C6051	Q2	E7001	U5	J2430	L1	L2273	K4	R2204	M5	**T**	
C2050	D5	C2416	T3	C6052	Q2	E7501	T9	J2431	N9	L2301	I4	R2205	M5	T6000	P1
C2051	H5	C2417	T3	C6055	Q2	E7502	T9	J2600	F5	L2302	J4	R2212	L4	T6001	R1
C2052	C5	C2418	T3	C6100	G7	E7503	U8	J2803	M6	L2304	J2	R2213	N3	T6002	P1
C2071	Q3	C2700	H2	C6101	H6	**F**		J2804	M6	L2305	I3	R2216	N3	T6003	P1
C2073	S2	C2701	H2	C6102	G7	F2000	A5	J2828	N7	L2306	I3	R2250	N2	T6004	Q1
C2074	L2	C2800	L8	C6103	G7	**G**		J2829	N7	L2402	T3	R2251	N2	T6005	Q2
C2076	Q4	C2801	N8	C6104	H6	G2200	C2	J2830	N7	L2403	J2	R2303	H3	T7501	R3
C2077	M2	C2802	M8	C6105	G6	G7500	S4	J2831	N7	L2404	T3	R2400	G4	T7520	S9
C2078	M2	C2803	L8	C6106	H6	G7501	Q3	J2833	N6	L2405	O2	R2406	N2	**V**	
C2079	E4	C2804	N8	C6107	H6	**J**		J2834	N6	L3200	G8	R2407	H5	V2000	A4
C2080	E4	C2805	K6	C6108	H6	J1000	E4	J2835	N6	L3301	N6	R2408	G4	V2401	H4
C2100	G5	C2807	N8	C6109	G6	J1001	E4	J2851	N7	L3303	P8	R2418	H4	V2402	G5
C2101	F5	C2808	M8	C7000	U8	J2000	A6	J2852	N7	L3304	O9	R2419	H5	V2405	G4
C2102	H5	C2809	M8	C7001	T8	J2001	D4	J3000	I7	L6030	Q2	R2421	K2	V2406	G6
C2103	O1	C2810	K8	C7010	N5	J2003	D4	J3001	I7	L6031	Q2	R2422	G5	V2407	C6
C2104	O2	C2811	K6	C7011	N4	J2006	E5	J3002	L6	L6032	Q1	R2423	G5	V2409	C4
C2200	M5	C2812	L8	C7012	N5	J2007	D2	J3003	I7	L6077	R2	R2424	I4	V2410	H4
C2201	M2	C2813	N6	C7013	N4	J2008	D3	J3004	J8	L6100	G7	R2425	G4	V2411	H4
C2202	N2	C2814	M8	C7501	S5	J2009	D3	J3005	J8	L6101	H6	R2426	N9	V2412	M1
C2203	M4	C2815	K8	C7502	Q5	J2010	A7	J3006	K7	L7010	N5	R2427	L1	V2413	M9
C2204	M4	C2816	K8	C7503	Q4	J2070	P3	J3100	H9	L7011	N4	R2430	G4	**X**	
C2205	M4	C2818	K6	C7504	S5	J2071	P3	J3101	H9	L7500	S6	R2803	L8	X1001	U3
C2206	M4	C2819	K8	C7505	Q4	J2072	P4	J3102	G9	L7501	S6	R2804	L8	X2000	A7
C2207	N2	C2820	N6	C7506	Q4	J2074	P3	J3103	G9	L7502	Q5	R3000	J6	X2002	B3
C2208	N3	C2821	N6	C7507	Q4	J2075	P4	J3104	G9	L7503	Q8	R3002	L8	X2030	B5
C2209	N3	C2831	N7	C7508	Q5	J2101	Q7	J3105	G9	L7504	R6	R3003	K6	X2060	A3
C2210	K3	C3000	I6	C7509	R4	J2102	Q8	J3106	G9	L7505	R6	R3004	K7	X2070	O3
C2211	K3	C3001	J6	C7511	R4	J2204	M4	J3107	G9	L7515	S4	R3200	G8	X2700	G3
C2212	K3	C3002	J6	C7513	Q4	J2205	M4	J3112	E3	L7561	Q6	R3201	H8	X3200	E7
C2213	L3	C3003	K8	C7515	S4	J2206	I6	J3113	E3	**M**		R3202	H8	X3300	P5
C2214	L2	C3004	K8	C7516	S4	J2207	K6	J3114	E3	M2100	C8	R3203	H7	X7000	T8
C2215	L2	C3005	J8	C7518	Q5	J2209	I6	J3115	E2	**N**		R3204	H7	**Z**	
C2216	L2	C3006	I8	C7520	S8	J2210	M4	J3116	E3	N2030	D5	R3205	G8	Z2001	C2
C2217	M3	C3007	J8	C7521	S8	J2212	L6	J3117	E3	N2031	C3	R3206	G8	Z2400	H4
C2219	M2	C3008	J8	C7522	Q8	J2213	K6	J3200	G8	N2300	J3	R3300	P7	Z2401	U4
C2220	K3	C3009	I8	C7523	S8	J2214	K6	J3201	G8	N2301	J2	R3301	P8	Z2402	R2
C2221	K2	C3010	N5	C7524	Q7	J2215	K6	J3202	G7	N2401	G5	R3305	O7	Z2700	H2
C2222	K2	C3013	K7	C7525	Q9	J2216	K4	J3203	G8	N3200	G8	R3306	P7	Z6030	R2
C2223	L4	C3014	K7	C7560	R3	J2217	K4	J3300	P8	N3300	O8	R3307	P7	Z7001	T8
C2224	M4	C3100	E2	C7561	R4	J2218	K4	J3301	O6	N3301	O6	R3312	I8	Z7002	T8
C2225	M2	C3115	O7	C7562	Q6	J2219	J6	J3302	O7	N6030	P2	R3313	I8	Z7501	S7
C2226	L2	C3116	O7	C7563	Q5	J2220	L6	J6001	S2	N6100	H7	R3314	O6	Z7503	Q6
C2227	K3	C3200	G8	C7564	S4	J2221	L6	J6003	S2	N7505	R5	R6005	N2	Z7504	R7
C2228	L2	C3201	H8	C7565	Q5	J2222	D2	J6100	H7	N7520	R8	R6020	T2	Z7520	S7
C2230	M3	C3202	H7	C7566	R4	J2300	K3	J6101	H7	**R**		R6030	P2		
C2231	K5	C3203	G8	**D**		J2306	Q3	J6103	H7	R2007	C2	R6031	Q1		
C2232	L2	C3204	H7	D2200	L3	J2307	Q3	J6104	H7	R2008	C2	R6032	P2		
C2270	L5	C3210	G8	D2800	L7	J2308	K3	J6105	H7	R2033	E5	R6034	Q2		
C2271	L5	C3211	D8	D3000	J7	J2309	J3	J6106	H7	R2034	E5	R6037	Q1		

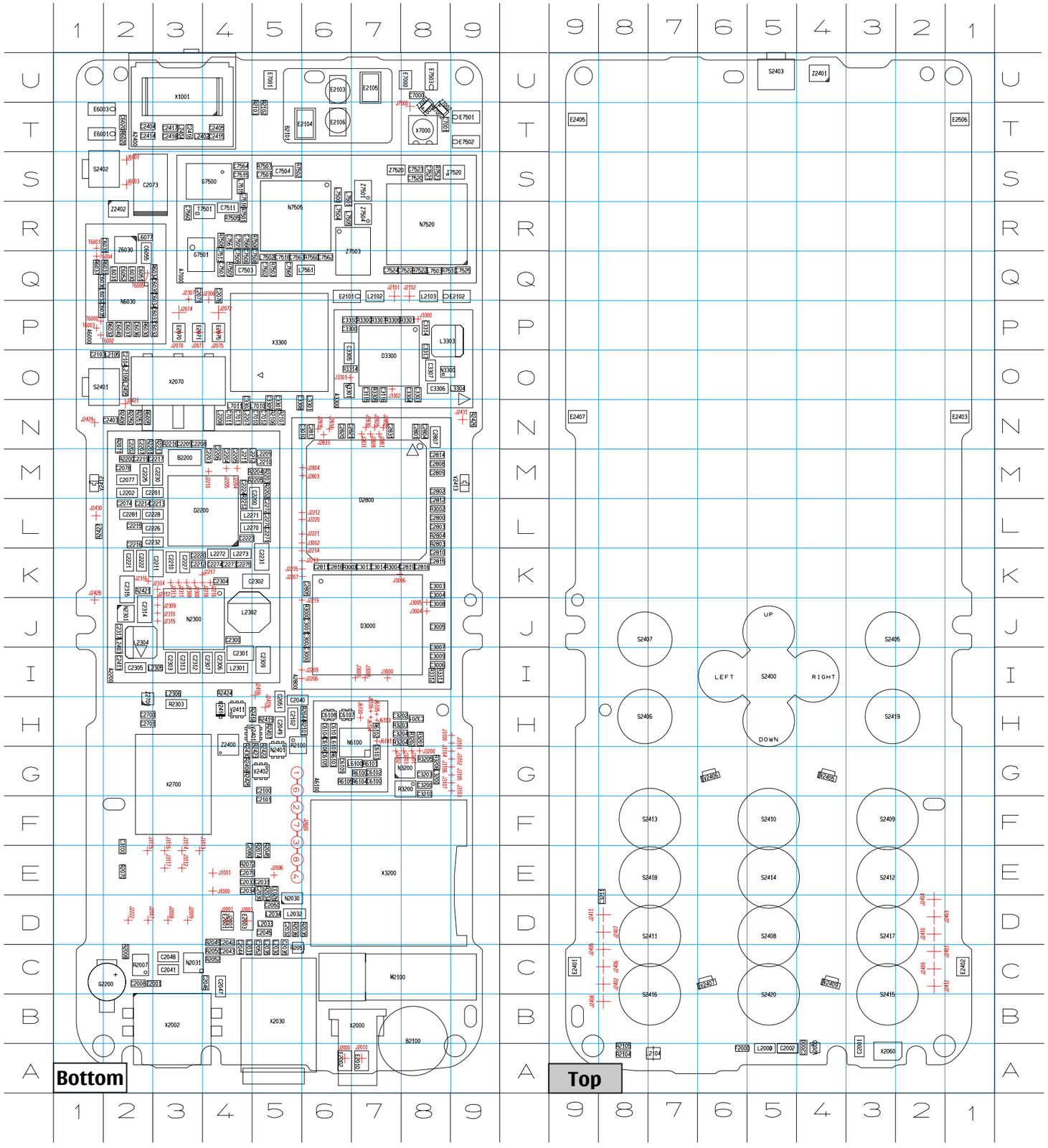

Confidential Copyright © 2006 NOKIA Only for training purposes

www.s-manuals.com