1. MAIN

MAIN

Exploded View

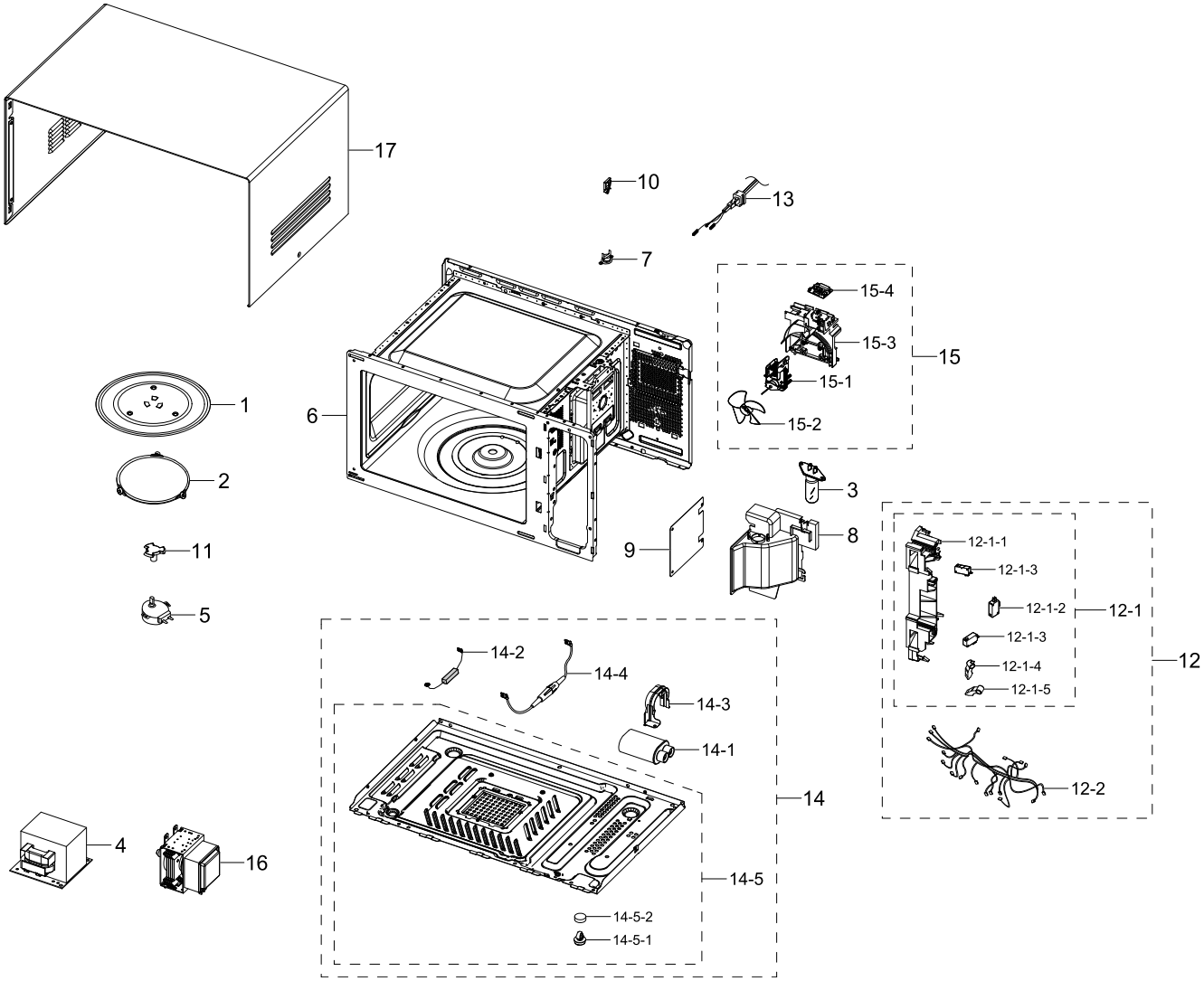

Copyright© 1995-2024 SAMSUNG. All rights reserved.

2. ASSY DOOR

ASSY DOOR

Exploded View

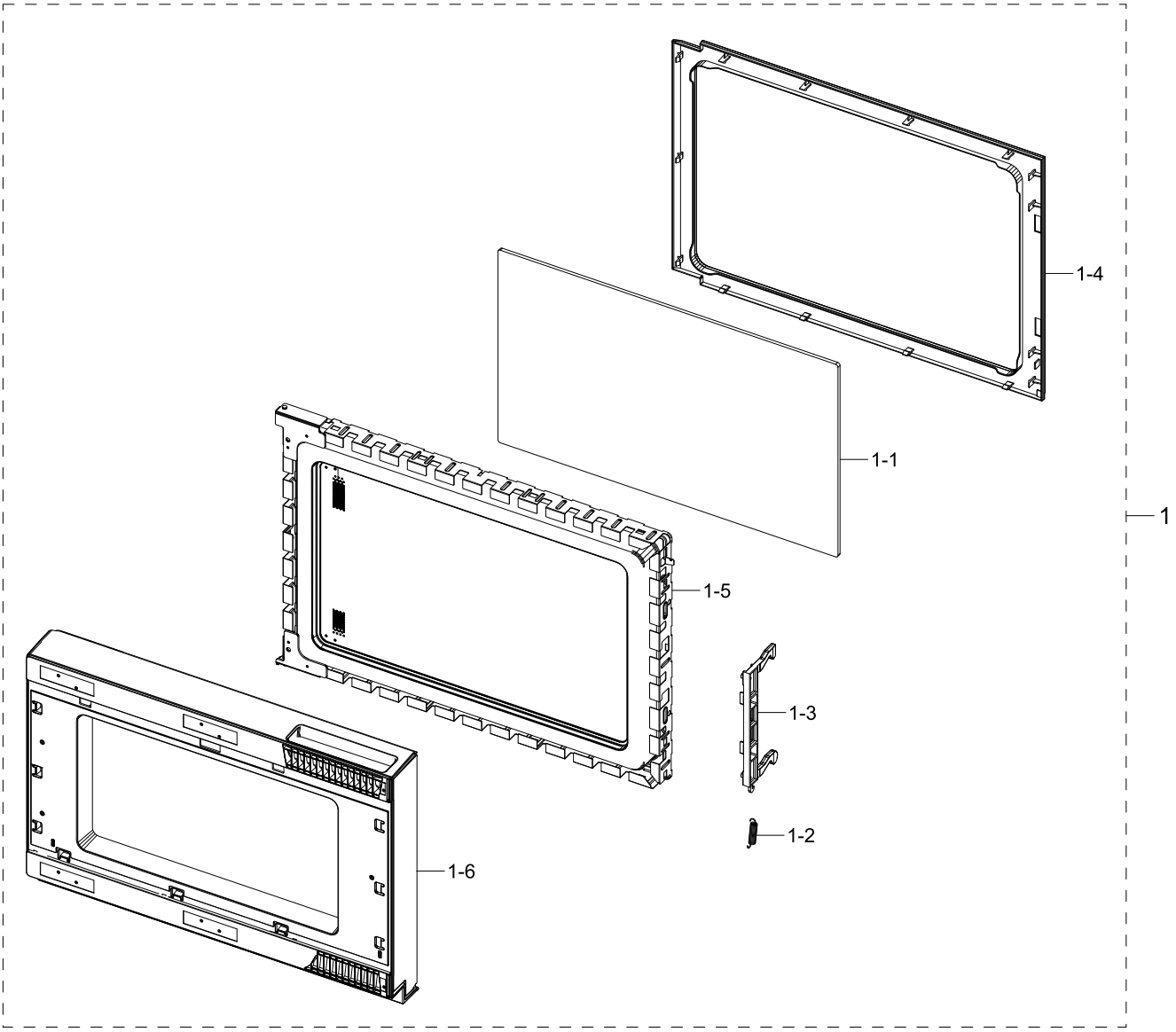

Copyright© 1995-2024 SAMSUNG. All rights reserved.

3. ASSY CONTROL BOX

ASSY CONTROL BOX

Exploded View

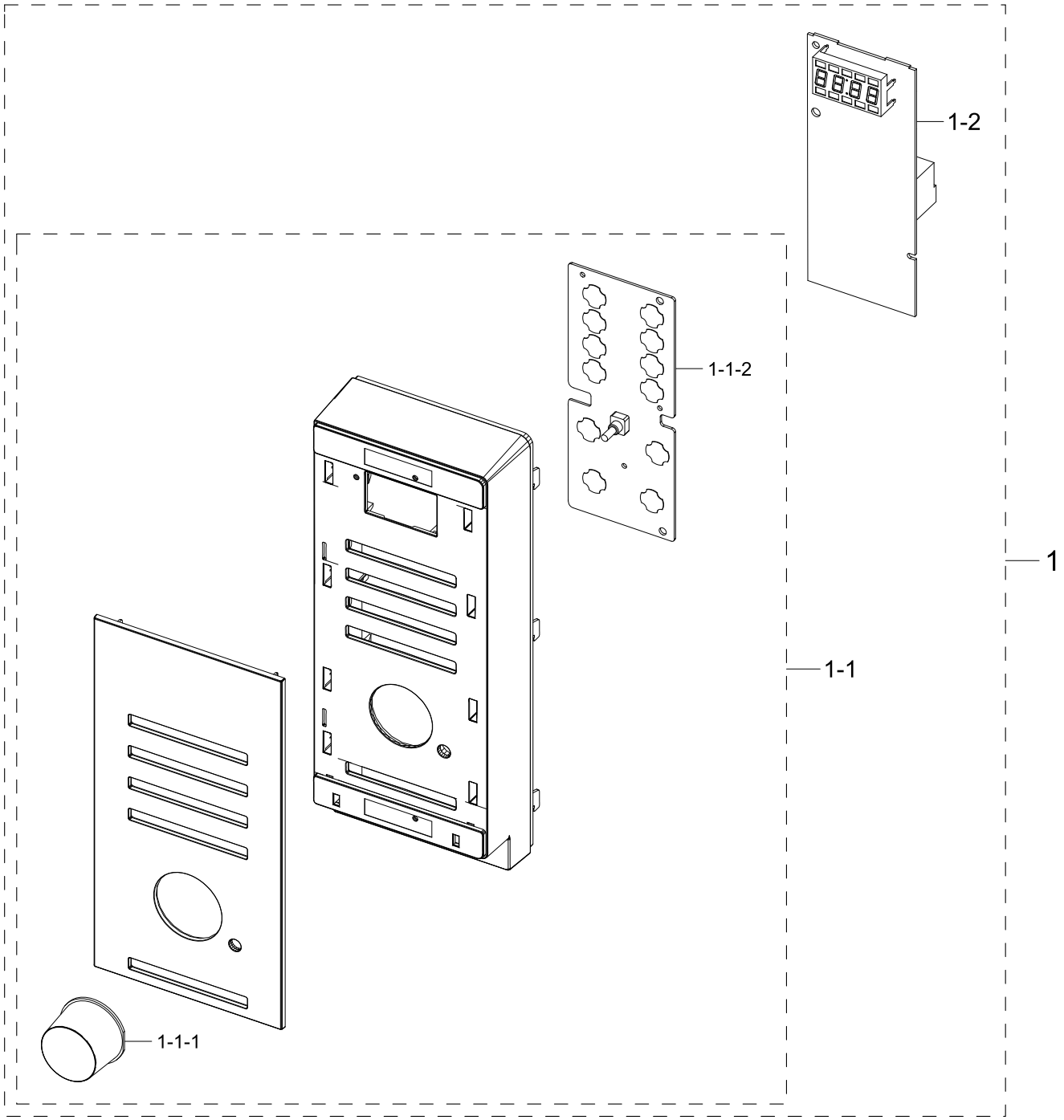

Copyright© 1995-2024 SAMSUNG. All rights reserved.