GARDENA®

EN

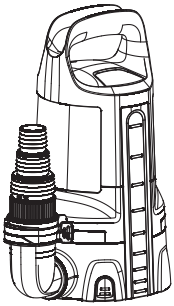

***11000**CLEAR* Art. 9034
***17000**CLEAR* Art. 9036

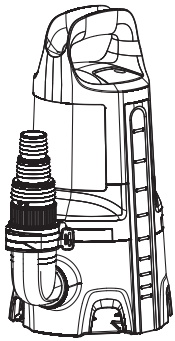

***20000**DIRT* Art. 9044

EN Operator's Manual
Clear Water Submersible Pump/
Dirty Water Submersible Pump

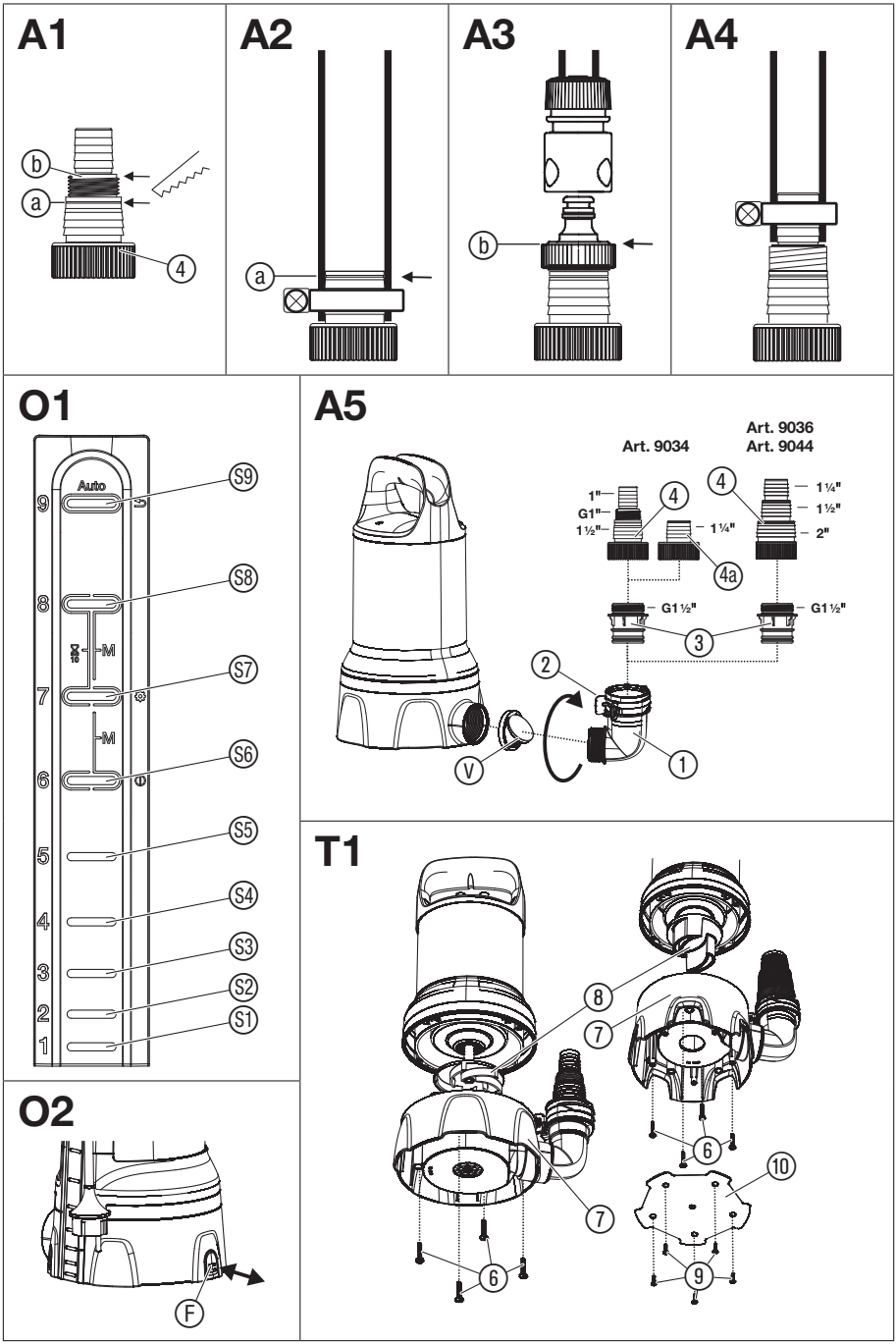
A1
b
a
4
A2
a
A3
b
A4
O1
Auto
9
8
7
6
5
4
3
2
1
M
M
S9
S8
S7
S6
S5
S4
S3
S2
S1
A5
Art. 9034
Art. 9036
Art. 9044
1"
G1"
1½"
4
1¼"
4a
4
1¼"
1½"
2"
G1½"
G1½"
3
2
1
V
T1
8
7
6
10
7
6
9
O2
F

GARDENA Clear Water Submersible Pump *11000CLEAR* Art. 9034 / *17000CLEAR* Art. 9036/ Dirty Water Submersible Pump *20000DIRT* Art. 9044

1. SAFETY 13
2. ASSEMBLY 14
3. OPERATION. 15
4. MAINTENANCE 17
5. STORAGE 17
6. TROUBLESHOOTING 18
7. TECHNICAL DATA 19
8. ACCESSORIES 19
9. SERVICE/WARRANTY. 20

Translation of the original instructions.

This product may be used under supervision, or if instruction regarding the safe use of the product has been provided and the resulting dangers have been understood, by children aged 8 and above, as well as by persons with physical, sensory or mental disabilities or a lack of experience and knowledge. Children must not be allowed to play with the product. Cleaning and user maintenance must not be performed by children without supervision. The use of this product by young people under the age of 16 is not recommended.

Intended use:

The **GARDENA Submersible Pump** is intended for drainage purposes if flooding occurs but also for transferring water to and from tanks and pumping them out, for drawing water from wells and shafts, for draining boats and yachts and for aerating and circulating water for limited periods and for pumping water containing chlorine and detergents in private domestic gardens and allotments.

Liquids to be pumped:

The GARDENA Submersible Pump must only be used to pump water.

The pump is fully submersible (water-tight encapsulation) and is submerged in water (for max. submersion depth, see 7. TECHNICAL DATA).

The product is suitable for pumping the following liquids:

- **Clear Water Submersible Pump:** clean to slightly dirty water with a max. particle size of 5 mm.
- **Dirty Water Submersible Pump:** dirty water with a max. particle size of 35 mm.

The product is not intended for long term use (continuous circulation operation).

DANGER! Risk of physical injury!

The pump should not be used for the delivery of salt water, corrosive, easily inflammable or explosive liquids (e. g. petrol, paraffin, thinners), oil, heating oil or foodstuffs.

1. SAFETY

IMPORTANT!
Read the operator's manual carefully before use and keep for future reference.

Symbols on the product:

Read operator's manual.

General safety warnings

Electrical safety

DANGER! Electric shock!
Risk of injury due to electric shock.

→ **The product must be supplied through a residual current device (RCD) having a rated residual operating current not exceeding 30 mA.**

→ **Contact GARDENA Service if the residual current device (RCD) has triggered.**

DANGER! Risk of injury!
Risk of injury due to electric current.

→ **Disconnect the product from the mains before you maintain or replace parts. Thereby the disconnected socket must be in the visual range.**

Safe operating practices

The water temperature should not exceed 35 °C.

The pump must not be used when people are in the water.

Pollution of the liquid could occur due to leakage of lubricants.

Keep bystanders away from the water.

Operate the pump only with the elbow connector.

The hose end should be lower than the maximum delivery head.

Circuit breakers

Thermal protection switch:

In the event of an overload, the pump is switched off by the built-in thermal motor protection. After sufficient cooling of the motor, the pump is operational again.

Automatic venting

This pump is equipped with a vent valve which eliminates any air pockets in the pump. Depending on the function, a small amount of water can escape from the side of the housing.

Additional safety warnings

Electrical safety

DANGER! Cardiac arrest!

This product makes an electromagnetic field while it operates. This field may under some conditions interfere with active or passive medical implants. To decrease the risk of conditions that can possibly injure or kill, we recommend persons with medical implants to speak with their physician and the medical implant manufacturer before you operate the product.

Cables

If extension cables are used, these must comply with the minimum cross-sections in the table below:

Voltage	Cable length	Cross section
230 – 240 V/50 Hz	Up to 20 m	1.5 mm^2
230 – 240 V/50 Hz	20 – 50 m	2.5 mm^2

DANGER! Electric shock!

With a cut off mains plug, moisture can get into electrical parts via the mains cable and cause a short circuit.

→ **Never cut the mains plug off (e. g. to feed through wall).**

→ Don't use the power cable for plugging off.

→ If the supply cord is damaged, it must be replaced by the manufacturer, its service agent or similarly qualified persons in order to avoid a hazard.

Mains plug and extension connections must be protected from water splashes.

Ensure that the electrical connections for plugs and sockets are made in areas safe from flooding.

Protect the mains plug and the mains power cable from heat, oil and sharp edges.

Observe the mains voltage. The information on the nameplate must be in agreement with the data for the mains power grid.

The pump's mains plug must be disconnected before anybody enters the swimming pool or touching the surface of the water.

The mains power cable must not be used for fastening or transporting the pump.

For submerging or lifting / securing the pump, please use a fastening rope.

Please regularly check the connecting line.

Before using, always subject the pump (especially the power cables and the power connections) to a visual inspection.

A pump which is damaged should not be used. In the event of damage, have the pump checked by the GARDENA Service.

Assembly instructions: Retighten all screws by hand.

Before use after maintenance, make sure that all parts are screwed together.

When using our pumps with a generator, the warnings of the generator manufacturer must be observed.

Personal safety

DANGER! Risk of suffocation!

Small parts can be easily swallowed. There is also a risk that the polybag can suffocate toddlers. Keep toddlers away when you assemble the product.

Observe the minimum water level in accordance with the characteristics given for the pump.

Allow the pump to run no longer than 10 minutes against a closed pressure side.

Sand and other abrasive substances cause increased wear and reduce the pump's output.

The sensor fields may only be operated outside the water.

The hose must not be disconnected during operation.

Allow the pump to cool down before troubleshooting.

2. ASSEMBLY

DANGER! Risk of physical injury!

Injury when the product starts accidentally.

→ **Disconnect the product from the mains before you assemble the product.**

Connection possibilities of the connection nipple [Fig. A1]:

The hose can be connected via the connection nipple ④ with different hose diameters or the GARDENA Connection System.

Large hose diameter	**Cut off nipple at ⓐ [Fig. A2]**
GARDENA Connection System/ Art. 9036/9044: Medium hose diameter	**Cut off nipple at ⓑ [Fig. A3]**
Small hose diameter	**Do not cut off nipple [Fig. A4]**

When using the largest hose diameter, the pump has the maximum delivery capacity.

Pump	**Art. 9034**	**Art. 9036 Art. 9044**
Small hose diameter	25 mm (1")	32 mm (1 1/4")
Art. GARDENA Hose Clamp	**Art. 7193**	**Art. 7194**
Medium hose diameter	GARDENA Connection System G 1"	38 mm (1 1/2")
Art. GARDENA Hose Clamp	32 mm (1 1/4")* **Art. 7194**	**Art. 7195**
Large hose diameter	38 mm (1 1/2")	51 mm (2")
Art. GARDENA Hose Clamp	**Art. 7195**	**Art. 7196**

When using the 38 mm (1 1/2") hose, we recommend the **GARDENA Flat Hose Set Art. 5005** with 10 m hose and hose clamp.

* For Art. 9034 an additional connection nipple ④a for 1 1/4" hoses is supplied.

To connect the hose via the connection nipple:

1. When using the large diameter hose, cut off the connection nipple ④ at ⓐ.
2. Only for Art. 9036/9044: When using the medium hose diameter, cut off the connection nipple ④ at ⓑ.
3. Push the hose onto the connection nipple ④.
4. Fix the hose to the connection nipple ④ e.g. with a **GARDENA Hose Clamp**.

Connect hose via the GARDENA Connection System:

With ***17000****CLEAR*/***20000****DIRT* (Art. 9036/9044) the hose cannot be connected via the connection nipple ④ with the GARDENA Connection System.

19 mm (3/4")/15 mm (5/8") and 13 mm (1/2") hoses can be connected via the GARDENA Connection System.

We do not recommend hose diameters smaller than 25 mm (1"), otherwise there will be a significant reduction in the output of the delivery rate.

Hose diameter	**Pump connection**	
13 mm (1/2")	**GARDENA Pump Connection Set**	**Art. 1750**
15 mm (5/8")	**GARDENA Pump Connection Set**	**Art. 1750**
19 mm (3/4")	**GARDENA Pump Connection Set**	**Art. 1752**

1. Cut off the connection nipple ④ at ⓑ.
2. Connect the hose to the connection nipple ④ via the appropriate GARDENA Connection System.

To assemble the pump connection [Fig. A5]:

DANGER! Risk of physical injury!
Injured cut by the impeller.
→ Operate the pump only with the elbow connector.

The hose can be easily connected and disconnected using the locking devices ② on the elbow connector ①.

With Art. 9034/9036 a non-return valve is supplied which prevents water from flowing back through the hose. The max. delivery rate is only achieved without the non-return valve.

If only a small amount of reflux is expected, e.g. if the hose is laid flat, we recommend dispensing with the valve due to the better delivery and suction performance.

1. Only for Art. 9034/9036: Insert the non-return valve ⓥ into the pump. Observe the installation direction.
2. Screw the elbow connector ① clockwise into the pump until it stops. (If the hose is to be installed horizontally, the elbow connector ① can be screwed out again up to half a turn. When using the non-return valve, increased force is required.)
3. Screw the connection piece ③ into the connection nipple ④.
4. Push the connection nipple ④ of the hose into the elbow connector ① until it stops until it engages audibly and visibly.
   The hose is securely connected to the pump.

3. OPERATION

DANGER! Risk of physical injury!
Injury when the product starts accidentally.
→ Disconnect the product from the mains before you connect, adjust or transport the product.

To pump water:

If the pump cannot be immersed via the handle, the pump must always be immersed via a rope. Attach the rope by pulling it through the eyelets provided and knotting it. Minimum immersion depth during initial operation see 7. TECHNICAL DATA.

Take care that the pump is located where the inlet openings at the suction base are not obstructed neither completely nor partly.

Stand the pump on a brick if using in a pond.

If the suction process is close to the minimum water level at start-up, the suction process may take longer.

1. Immerse the pump.
2. Connect the pump to the mains.
   Attention! The pump begins operating immediately.
   The sensor is initialised and indicated by a running light.

Automatic operation [Fig. O1]:

In automatic operation the pump switches on automatically when the water level reaches the switch-on level and switches off automatically when the water level reaches the switch-off level.

Switch-on/switch-off heights of the sensor fields:

The sensor has nine sensor fields (S1 to S9 from bottom to top), which are located to the right of the LEDs.

The sensor fields are about 1 cm high (no finger or changed water level is detected between the sensor fields).

Sensor field	S1	S2	S3	S4	S5	S6	S7	S8	S9
Art. 9034/9036 Switch height [mm]	5	19	34	53	77	105	136	170	207
Art. 9044 Switch height [mm]	42	54	69	88	112	140	171	205	242

Art. 9034/9036: When the feet are folded in, the values are 4 mm higher in each case.

After plugging in the pump the 9 LED's light up one after the other.

The pump starts at the factory in automatic mode with sensor field switch-on height S8 and sensor field switch-off height S4.

To adjust the switch-on/switch-off heights [Fig. O1]:

The sensor fields can only be adjusted outside the water.

When the pump has been removed from the water, the sensor should be dried for programming.

The upper sensor field is always the switch-on height, the lower sensor field is always the switch-off height.

1. Operate the sensor field until the input is acknowledged with a short double flash of all LEDs.
2. Keep the sensor field S7 pushed until the double flashing of all LED's has acknowledged the input.
   The currently set switch-on and switch-off heights are briefly displayed. After that all sensor fields light up.
3. Push the desired upper sensor field for the switch-on height.
   The LED of the selected sensor field switches off.
4. Push the desired lower sensor field for the switch-off height.
   The LED of the selected sensor field switches off. After 3 seconds, the set switch-on and switch-off heights are accepted and displayed.

Automatic clear water suction for very low water levels:

Sensor field S1 can be selected both as switch-on and switch-off point.

If the sensor field S1 still detects water within 10 minutes after starting the pump, the pump switches off to prevent damage due to dry running.

The pump will still start if sensor field S2 detects water. In this case, however, the sensor should be cleaned to ensure exact water level detection.

If the sensor field S1 is activated several times within a short time by water flowing back from the hose line, there is a pause of 10 minutes.

If the water level reaches sensor field S2, the pump switches on automatically, even within the pause of 10 minutes. If this is the case regularly, please select the next sensor field as the switch-on point.

In order to ensure quick suction, the pump switches off briefly for the sensor field S1 – sensor field S5 to vent. After 20 seconds of operation, the pump switches off once for approx. 2 seconds and then on again.

To display switch-on and switch-off heights:

→ Keep the sensor field S6 pushed until the double flashing of all LED's has acknowledged the input.
The currently set switch-on and switch-off heights are displayed.

Disable the water level tracking:

In automatic operation, the LEDs follow the water level. This can be deactivated.

→ Keep the sensor field S8 pushed during initialisation until the double flashing of all LED's has acknowledged the input (see ***To pump water***).

To switch the water level tracking back on, push and hold the sensor field S8 again during initialisation until the double flashing of all LED's has acknowledged the input.

Demo mode:

For presentation purposes, the pump can be put into demo mode. In this mode, the LEDs simulate the pump's functions via flashing sequences and the sensor fields react to touch.

→ Keep the sensor fields S5 and S8 pushed during initialisation when switching on or during the self-test after plugging in until the double flashing of all LED's has acknowledged the input.

To switch off the demo mode again, push and hold the sensor fields S5 and S8 during initialisation when switching on or during the self-test after plugging in until the double flashing of all LED's has acknowledged the input.

Manual operation [Fig. O1]:

In manual mode the pump runs until the pump is disconnected from the mains. This mode is particularly suitable for flat suction.

In manual operation the sensor fields are deactivated. The pump then runs until the pump is disconnected from the mains or another operating mode is selected.

→ Keep the sensor fields S6 and S8 pushed until the double flashing of all LED's has acknowledged the input.
All LEDs will light up and within 5 seconds all the LEDs will switch off one after the other. The pump starts.

During these 5 seconds the pump should be placed in the water. A start will only take place if the pump detects water. If this is not the case, the countdown is repeated up to three times.

If you need more time to put the pump into the water, please disconnect the pump from the power supply. The countdown will continue after the sensor is plugged in again.

The manual operation remains active even after disconnecting the power supply.

To stop manual operation, disconnect the pump from the mains and take it out of the water. Connect the pump to the power supply again and keep sensor field Ⓢ9 pressed until it is acknowledged by double flashing of all LEDs. Now you are again in automatic mode.

Only operate the manual mode under supervision.

Time-limited manual operation:

In time-limited manual operation, the sensor fields are deactivated for 10 minutes. The pump then runs for 10 minutes and then switches off automatically.

→ Keep the sensor fields Ⓢ7 and Ⓢ8 pushed until the double flashing of all LED's has acknowledged the input.
All LEDs will light up and within 10 seconds all LEDs will switch off one after the other. The pump starts.

After 10 minutes the pump automatically switches back to automatic operation.

After disconnecting the power supply, the pump automatically switches back to automatic operation.

To return to the automatic mode again, push and hold the 2 sensor fields Ⓢ7 and Ⓢ8 simultaneously until the double flashing of all LEDs has acknowledged the input.

Flat suction / normal operation (only for the clear water submersible pumps) [Fig. O2]:

Normal operation:

Recommended operating mode for maximum pumping capacity and grain size up to 5 mm, especially in automatic mode.

→ Fold the 3 folding feet Ⓕ inwards.

Flat suction:

The residual water height of approx. 1 mm is only achieved with flat suction in manual operation. Please note that in this mode the delivery and suction capacity is reduced.

→ Fold the 3 folding feet Ⓕ outwards.

4. MAINTENANCE

DANGER! Risk of physical injury!
Injury when the product starts accidentally.

→ **Disconnect the product from the mains before you maintain the product.**

To clean the pump:

DANGER! Risk of physical injury!
Risk of injury and risk of damage to the product.

→ **Do not clean the product with a water jet (in particular high-pressure water jet).**

→ **Do not clean with chemicals including petrol or solvents. Some can destroy critical plastic parts.**

→ Clean the surface of the pump with a damp cloth.

To flush the pump:

After pumping water containing chlorine, detergents or heavily soiled water, the pump must be flushed.

1. Pump lukewarm water (max. 35 °C), possibly adding a mild cleaning agent (e.g. detergent) until the pumped water runs clear.
2. Remove residuals according to the waste disposal laws applicable in your area.

5. STORAGE

To put into storage:

The pump is not frost-proof!

The product must be stored away from children.

1. Disconnect the pump from the mains.
2. Turn the pump upside down until no more water runs out.
3. Clean the pump (see 4. MAINTENANCE).
4. Store the pump in a dry, enclosed and frost-free place.

Disposal:

(in accordance with RL2012/19/EC)

The product must not be disposed of to normal household waste. It must be disposed of in line with local environmental regulations.

IMPORTANT!

→ Dispose of the product through or via your municipal recycling collection centre.

6. TROUBLESHOOTING

DANGER! Risk of physical injury!
Injury when the product starts accidentally.

→ **Disconnect the product from the mains before you troubleshoot the product.**

To clean the suction base and the impeller [Fig. T1]:

1. Only for Art. 9044: Unscrew the 5 Phillips screws ⑨ and remove the cover ⑩.
2. Unscrew the 4 Phillips screws ⑥.
3. Pull the suction base ⑦ off the pump.
4. Clean suction base ⑦ and impeller ⑧ (the warranty does not become void as a result of this maintenance work).
5. Clean the sealing surfaces carefully to avoid damage and leakage.
6. Reassemble the suction base ⑦ in reverse order.

A damaged seal must be replaced.

For safety reasons a damaged impeller can only be exchanged by the GARDENA Service Centre.

Problem	Possible Cause	Remedy
Pump is running, but doesn't deliver water	Low water level and filled hose with built-in non return valve.	→ Remove the check valve or empty the hose manually
	Air cannot escape, because the pressure line is closed. (Possible kink in the pressure hose.)	→ Open the pressure line (e. g. shut-off valve, delivery units).
	Air in suction foot.	→ Wait for about 60 seconds until the pump has vented; if necessary, turn off and then on again.
Error code 2	Suction opening is clogged.	→ Clean the suction opening with a water jet.
	Hose is clogged.	→ Remove the clog from the hose.
Error code 1	Impeller is blocked.	→ Clean the impeller.
Error code 2	Water level below minimum water level when put into operation.	→ Submerge the pump deeper.
Error code 3	Sensor is dirty.	→ Clean the sensor.
Error code 4	Time is exceeded.	→ Place the pump in water within the countdown.
Pump does not start, or stops suddenly during operation	Thermal switch has turned the pump off because of overheating.	→ Clean the suction opening. Observe the max. media temperature (35 °C).
	Pumping without electricity.	→ Check fuses and electrical plug connections.
	RCD has triggered (residual current).	→ Disconnect the pump and contact the GARDENA Service.
Pump is running but the delivery drops suddenly	Suction opening is clogged.	→ Clean the suction opening with a water jet.
	Hose is clogged.	→ Remove the clog from the hose.
Pump starts and stops several times in succession	Returning water from the hose	→ Select the next higher switch-on point and insert the non return valve.
Pump does not start with activated sensor field Ⓢ1	Sensor field Ⓢ1 was activated several times within a short time and the pump is paused.	→ Wait for the break. Select the next higher switch-on point and insert the non return valve.

NOTE: For any other malfunctions please contact the GARDENA service department. Repairs must only be done by GARDENA service departments or specialist dealers approved by GARDENA.

7. TECHNICAL DATA

Submersible Pump	Unit	Value (Art. 9034)	Value (Art. 9036)	Value (Art. 9044)
Rated power	W	450	750	750
Mains voltage	V (AC)	230	230	230
Mains frequency	Hz	50	50	50
Max. delivery capacity	l/h	11,000	17,000	20,000
Max. pressure/ Max. delivery head	bar/ m	0.7 / 7.0	0.9 / 9.0	0.9 / 9.0
Max. submersion depth	m	7	7	7
Min./max. cut-in height	mm	5 / 207	5 / 207	42 / 242
Min./max. cut-out height	mm	1 / 170	1 / 170	35 / 205
Residual water level	mm	1	1	35
Dirty water with max. particle diameter (* Flat suction)	mm	1* / 5	1* / 5	35
Minimum water depth for operation (approx.)	mm	5	5	42
Power cable	m	10 (H05RN-F)	10 (H05RN-F)	10 (H07RN-F)
Weight without cable (approx.)	kg	4.0	4.7	5.0
Connection thread water outlet	Inch	G 1 1/2"	G 1 1/2"	G 1 1/2"
Connection options	Inch	1" / 1 1/4" / 1 1/2" / G 1"	1 1/4" / 1 1/2" / 2"	1 1/4" / 1 1/2" / 2"
Max. media temperature	°C	35	35	35

Note: The switch on/switch-off heights and the minimum water level on start-up were calculated without the height differences to be negotiated. Pump heads of approx. 1 m or more may result in longer suction times of up to 1 minute, or higher minimum water levels of up to +5 cm.

* When the feet are folded in, the values are 4 mm higher in each case.

8. ACCESSORIES

GARDENA Flat Hose Set	10 m 38 mm (1/2") hose with hose clamp.	**Art. 5005**
GARDENA Hose Clamp	For 25 mm (1") hoses via the connection nipple.	**Art. 7193**
GARDENA Hose Clamp	For 32 mm (1 1/4") hoses via the connection nipple.	**Art. 7194**
GARDENA Hose Clamp	For 38 mm (1 1/2") hoses via the connection nipple.	**Art. 7195**
GARDENA Hose Clamp	For 51 mm (2") hoses via the connection nipple.	**Art. 7196**
GARDENA Pump Connection Set	For 19 mm (3/4") hoses via the GARDENA Connection System.	**Art. 1752**

9. SERVICE/WARRANTY

Service:

Please contact the address on the back page.

Warranty statement:

In the event of a warranty claim, no charge is levied to you for the services provided.

GARDENA Manufacturing GmbH grants a warranty for all original GARDENA new products for two years from the date of original purchase from the retailer, provided that the devices have been for private use only. This manufacturer's warranty does not apply to products acquired second hand. This warranty includes all significant defects of the product that can be proved to be material or manufacturing faults. This warranty is fulfilled by supplying a fully functional replacement product or by repairing the faulty product sent to us free of charge; we reserve the right to choose between these options. This service is subject to the following provisions:

- The product has been used for its intended purpose as per the recommendations in the operating instructions.
- Neither the purchaser nor a third party has attempted to open or repair the product.
- Only Original GARDENA replacement parts and wear parts have been used for operation.
- Presentation of the receipt.

Normal wear and tear of parts and components (such as blades, blade fixing parts, turbines, light bulbs, V-belts/toothed belts, impellers, air filters, spark plugs), visual changes, wear parts and consumables are excluded from the warranty.

This manufacturer's warranty is limited to replacement and repair of products in accordance with the abovementioned conditions. The manufacturer's warranty does not constitute an entitlement to lodge other claims against us as a manufacturer, such as for damages. This manufacturer's warranty does **not**, of course, affect statutory and contractual warranty claims against the dealer/retailer.

The manufacturer's warranty is governed by the law of the Federal Republic of Germany.

In case of a warranty claim, please return the faulty product, together with a copy of the receipt and a description of the fault, with postage paid to the service address.

Consumables:

The impeller is a consumable and is not included in the warranty.

Pumpen-Kennlinien
Performance characteristics
Courbes de performance
Prestatiegrafiek
Kapacitetskurva
Ydelses karakteristika
Pumpun ominaiskäyrä
Pumpekarakteristikk
Curva di rendimento
Curva característica de la bomba
Características de performance
Charakterystyka pompy
Szivattyú-jelleggörbe
Charakteristika čerpadla
Charakteristiky čerpadla
Χαρακτηριστικό διάγραμμα
Характеристика насоса
Karakteristika črpalka
Obilježja pumpe
Karakteristika pumpe
Крива характеристики насоса
Caracteristică pompă
Pompa karakter eğrisi
Помпена характеристика
Fuqia e pompës
Pumba karakteristik
Siurblio charakteristinė kreivė
Sūkņa raksturlīkne

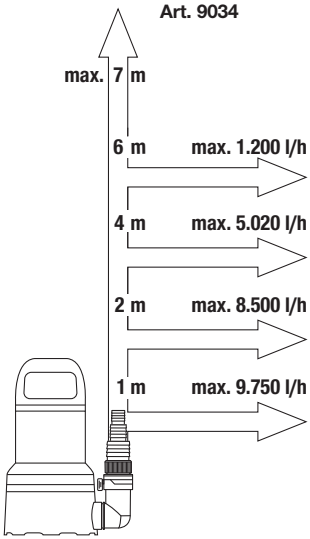

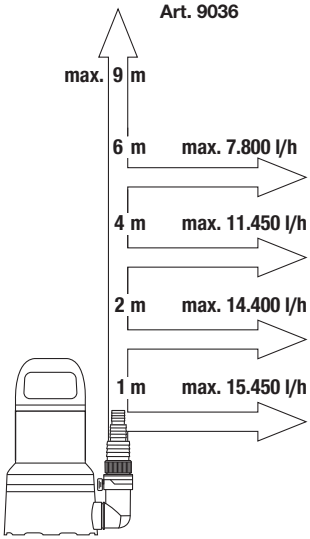

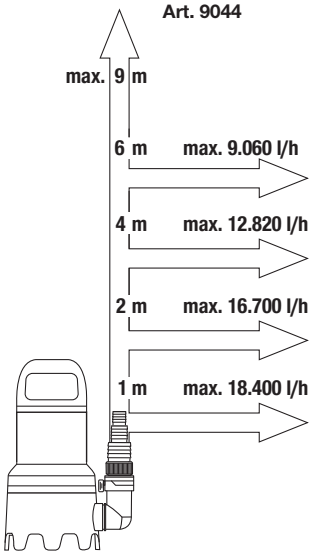

DE ***Produkthaftung***
Wir weisen ausdrücklich darauf hin, dass wir in Übereinstimmung mit dem Produkthaftungsgesetz nicht für Schäden haften, die durch unsere Produkte entstehen, wenn diese unsachgemäß und nicht durch einen von uns autorisierten Servicepartner repariert wurden oder wenn keine Original GARDENA Teile oder von uns zugelassene Teile verwendet wurden.

EN ***Product liability***
In accordance with the German Product Liability Act, we hereby expressly declare that we accept no liability for damage incurred from our products where said products have not been properly repaired by a GARDENA-approved service partner or where original GARDENA parts or parts authorised by GARDENA were not used.

FR ***Responsabilité***
Conformément à la loi relative à la responsabilité du fait des produits défectueux, nous déclarons expressément par la présente que nous déclinons toute responsabilité pour les dommages résultant de nos produits, si lesdits produits n'ont pas été correctement réparés par un partenaire d'entretien agréé GARDENA ou si des pièces d'origine GARDENA ou des pièces agréées GARDENA n'ont pas été utilisées.

NL ***Productaansprakelijkheid***
Conform de Duitse wet inzake productaansprakelijkheid verklaren wij hierbij uitdrukkelijk dat wij geen aansprakelijkheid aanvaarden voor schade ontstaan uit onze producten waarbij deze producten niet zijn gerepareerd door een GARDENA-erkende servicepartner of waarbij geen originele GARDENA-onderdelen of onderdelen die door GARDENA zijn goedgekeurd zijn gebruikt.

SV ***Produktansvar***
I enlighet med tyska produktansvarslagar förklarar vi härmed uttryckligen att vi inte åtar oss något ansvar för skador som orsakas av våra produkter där produkterna inte har genomgått korrekt reparation från en GARDENA-godkänd servicepartner eller där originaldelar från GARDENA eller delar godkända av GARDENA inte använts.

DA ***Produktansvar***
I overensstemmelse med den tyske produktansvarslov erklærer vi hermed udtrykkeligt, at vi ikke påtager os noget ansvar for skader på vores produkter, hvis de pågældende produkter ikke er blevet repareret korrekt af en GARDENA-godkendt servicepartner, eller hvor der ikke er brugt originale GARDENA-reservedele eller godkendte reservedele fra GARDENA.

FI ***Tuotevastuu***
Saksan tuotevastuulain mukaisesti emme ole vastuussa laitteiden vaurioista, jos korjauksia ei ole tehnyt GARDENAn hyväksymä huoltoliike tai jos niiden syynä on muiden kuin alkuperäisten GARDENA-varaosien tai GARDENAn hyväksymien varaosien käyttö.

IT ***Responsabilità del prodotto***
In conformità con la Legge tedesca sulla responsabilità del prodotto, con la presente dichiariamo espressamente che decliniamo qualsiasi responsabilità per danni causati dai nostri prodotti qualora non siano stati correttamente riparati presso un partner di assistenza approvato GARDENA o laddove non siano stati utilizzati ricambi originali o autorizzati GARDENA.

ES ***Responsabilidad sobre el producto***
De acuerdo con la Ley de responsabilidad sobre productos alemana, por la presente declaramos expresamente que no aceptamos ningún tipo de responsabilidad por los daños ocasionados por nuestros productos si dichos productos no han sido reparados por un socio de mantenimiento aprobado por GARDENA o si no se han utilizado piezas originales GARDENA o piezas autorizadas por GARDENA.

PT ***Responsabilidade pelo produto***
De acordo com a lei alemã de responsabilidade pelo produto, declaramos que não nos responsabilizamos por danos causados pelos nossos produtos, caso os tais produtos não tenham sido devidamente reparados por um parceiro de assistência GARDENA aprovado ou se não tiverem sido utilizadas peças GARDENA originais ou peças autorizadas pela GARDENA.

PL ***Odpowiedzialność za produkt***
Zgodnie z niemiecką ustawą o odpowiedzialności za produkt, niniejszym wyraźnie oświadczamy, że nie ponosimy żadnej odpowiedzialności za szkody poniesione na skutek użytkowania naszych produktów, w przypadku gdy naprawa tych produktów nie była odpowiednio przeprowadzana przez zatwierdzonego przez firmę GARDENA partnera serwisowego lub nie stosowano oryginalnych części GARDENA albo części autoryzowanych przez tę firmę.

HU ***Termékszavatosság***
A németországi termékszavatossági törvénnyel összhangban ezennel nyomatékosan kijelentjük, hogy nem vállalunk felelősséget a termékeinkben keletkezett olyan károkért, amelyek valamely GARDENA által jóváhagyott szervizpartner által nem megfelelően végzett javításból adódtak, vagy amely során nem eredeti GARDENA alkatrészeket vagy a GARDENA által jóváhagyott alkatrészeket használtak fel.

CS ***Odpovědnost za výrobek***
V souladu s německým zákonem o odpovědnosti za výrobek tímto výslovně prohlašujeme, že nepřijímáme žádnou odpovědnost za poškození vzniklá na našich výrobcích, kdy zmíněné výrobky nebyly řádně opraveny schváleným servisním partnerem GARDENA nebo kdy nebyly použity originální náhradní díly GARDENA nebo náhradní díly autorizované společností GARDENA.

SK ***Zodpovednosť za produkt***
V súlade s nemeckými právnymi predpismi upravujúcimi zodpovednosť za výrobok týmto výslovne prehlasujeme, že nenesieme žiadnu zodpovednosť za škody spôsobené našimi výrobkami, v prípade ktorých neboli náležité opravy vykonané servisným partnerom schváleným spoločnosťou GARDENA alebo neboli použité diely spoločnosti GARDENA alebo diely schválené spoločnosťou GARDENA.

EL ***Ευθύνη προϊόντος***
Σύμφωνα με τον γερμανικό νόμο περί Ευθύνης για τα Προϊόντα, με το παρόν δηλώνουμε ρητώς ότι δεν αποδεχόμαστε καμία ευθύνη για τυχόν ζημίες που προκύπτουν από τα προϊόντα μας εάν αυτά δεν έχουν επισκευαστεί σωστά από κάποιον εγκεκριμένο συνεργάτη επισκευών της GARDENA ή εάν δεν έχουν χρησιμοποιηθεί αυθεντικά εξαρτήματα GARDENA ή εξαρτήματα εγκεκριμένα από την GARDENA.

SL ***Odgovornost proizvajalca***
V skladu z nemškimi zakoni o odgovornosti za izdelke,izrecno izjavljajo, da ne sprejemamo nobene odgovornosti za škodo, ki jo povzročijo naši izdelki, če teh niso ustrezno popravili GARDENINI odobreni servisni partnerji ali pri tem niso bili uporabljeni originalni GARDENINI nadomestni deli ali GARDENINIMI homologiranimi nadomestnimi deli.

HR ***Pouzdanost proizvoda***
Sukladno njemačkom zakonu o pouzdanosti proizvoda, ovime izričito izjavljujemo kako ne prihvaćamo nikakvu odgovornost za oštećenja na našim proizvodima nastala uslijed neispravnog popravka od strane servisnog partnera kojeg odobrava GARDENA ili uslijed nekorištenja originalnih GARDENA dijelova ili dijelova koje odobrava GARDENA.

RO ***Răspunderea pentru produs***
În conformitate cu Legea germană privind răspunderea pentru produs, declarăm în mod expres prin prezentul document că nu acceptăm nicio răspundere pentru defecțiunile suferite de produsele noastre atunci când acestea nu au fost reparate în mod corect de un atelier de service partener, aprobat de GARDENA, sau când nu au fost utilizate piese GARDENA originale sau piese autorizate de GARDENA.

BG ***Отговорност за вреди, причинени от стоки***
Съгласно германския Закон за отговорността за вреди, причинени от стоки, с настоящото изрично декларираме, че не носим отговорност за щети, причинени от нашите продукти, ако те не са били правилно ремонтирани от одобрен от GARDENA сервиз или ако не са използвани оригинални части на GARDENA или части, одобрени от GARDENA.

ET ***Tootevastutus***
Vastavalt Saksamaa tootevastutusseadusele deklareerime käesolevaga selgesõnaliselt, et me ei kanna mingisugust vastutust meie toodetest tingitud kahjude eest, kui need tooted ei ole korrektselt parandatud GARDENA heakskiidetud hooldusspartneri poolt või kui parandamisel ei ole kasutatud GARDENA originaalosi või GARDENA volitatud osi.

LT ***Gaminio patikimumas***
Mes aiškiai pareiškiame, kad, atsižvelgiant į Vokietijos gaminių patikimumo įstatymą, neprisiimame atsakomybės dėl bet kokios žalos, patirtos dėl mūsų gaminių, jeigu jie buvo netinkamai taisomi arba jų dalys buvo pakeistos neoriginaliomis GARDENA dalimis ar nepatvirtintomis dalimis, arba jeigu remonto darbai buvo atliekami ne GARDENA techninės priežiūros centro specialistų.

LV ***Atbildība par produkcijas kvalitāti***
Saskaņā ar Vācijas likumu par atbildību par produkcijas kvalitāti ar šo mēs paziņojam, ka neuzņemamies atbildību par bojājumiem, kas radušies, lietojot mūsu izstrādājumus, kuru remontu nav veicis uzņēmuma GARDENA apstiprināts apkopes partneris vai kuru remontam netika izmantotas oriģinālās GARDENA detaļas vai detaļas, kuru lietošanu apstiprinājis uzņēmums GARDENA.

DE EU-Konformitätserklärung

Der Unterzeichnende bestätigt als Bevollmächtigte des Herstellers, der GARDENA Germany AB, PO Box 7454, S-103 92, Stockholm, Schweden, dass das (die) nachfolgend bezeichnete(n) Gerät(e) in der von uns in Verkehr gebrachten Ausführung die Anforderungen der harmonisierten EU-Richtlinien, EU-Sicherheitsstandards und produktspezifischen Standards erfüllt/erfüllen. Bei einer nicht mit uns abgestimmten Änderung des (der) Geräte(s) verliert diese Erklärung ihre Gültigkeit.

EN EC Declaration of Conformity

The undersigned hereby certifies as the authorized representative of the manufacturer, GARDENA Germany AB, PO Box 7454, S-103 92, Stockholm, Sweden, that, when leaving our factory, the unit(s) indicated below is/are in accordance with the harmonised EU guidelines, EU standards of safety and product specific standards. This certificate becomes void if the unit(s) is/are modified without our approval.

FR Déclaration de conformité CE

Le soussigné déclare, en tant que mandataire du fabricant, la GARDENA Germany AB, PO Box 7454, S-103 92, Stockholm, Suède, qu'à la sortie de ses usines le matériel neuf désigné ci-dessous était conforme aux prescriptions des directives européennes énoncées ci-après et conforme aux règles de sécurité et autres règles qui lui sont applicables dans le cadre de l'Union européenne. Toute modification portée sur ce(s) produit(s) sans l'accord express de notre part supprime la validité de ce certificat.

NL EU-conformiteitsverklaring

De ondergetekende bevestigt als gevolmachtigde van de fabrikant, GARDENA Germany AB, PO Box 7454, S-103 92, Stockholm, Zweden, dat het/de onderstaand vermelde apparaat/apparaten in de door ons in de handel gebrachte uitvoering voldoet/voldoen aan de eisen van de geharmoniseerde EU-richtlijnen, EU-veiligheidsnormen en productspecifieke normen. Bij een niet met ons afgestemde verandering van het apparaat/de apparaten verliest deze verklaring haar geldigheid.

SV EU-försäkran om överensstämmelse

Undertecknad intygar som befullmäktigad företrädare för tillverkaren, GARDENA Germany AB, PO Box 7454, S-103 92, Stockholm, Sverige, att nedan angiven apparat/nedan angivna apparater i det utförande vi har släppt på marknaden, uppfyller fordringarna i de harmoniserade EU-direktiven, EU-säkerhetsstandarderna och de produktspecifika standarderna. Denna försäkran upphör att gälla vid en ändring av apparaten/apparaterna som inte har stämts av med oss.

DA EU-overensstemmelseserklæring

Underskriveren bekræfter som fuldmægtig for producenten, GARDENA Germany AB, PO Box 7454, S-103 92, Stockholm, Sverige, at det (de) efterfølgende betegnede apparat(er) i den af os markedsførte udførelse opfylder kravene i de harmoniserede EU-direktiver, EU-sikkerhedsstandarder og produktspecifikke standarder. Foretages en ændring af apparatet/apparaterne, der ikke er aftalt med os, mister denne erklæring sin gyldighed.

FI EU-vaatimustenmukaisuusvakuutus

Allekirjoittanut vahvistaa valmistajan, GARDENA Germany AB, PO Box 7454, S-103 92, Tukholma, Ruotsi, valtuuttamana henkilönä, että seuraava laite täyttää/seuraavat laitteet täyttävät meidän toimittamassa mallissa yhdenmukaistettujen EU-direktiivien, EU-turvallisuusmääräysten ja tuotekohtaisten standardien vaatimukset. Laitteen/laitteiden muutoksissa, joista ei ole sovittu meidän kanssamme, menettää tämä selvitys voimassaolonsa.

IT Dichiarazione di conformità UE

Il sottoscritto, in quanto soggetto autorizzato dal produttore, GARDENA Germany AB, PO Box 7454, S-103 92, Stoccolma, Svezia, dichiara che l'apparecchio/gli apparecchi di seguito denominato/i, nella versione da noi immessa in commercio, soddisfa/no i requisiti delle direttive UE armonizzate, degli standard di sicurezza europei e degli standard specifici per il prodotto. La presente dichiarazione perde di validità in caso di modifica dell'apparecchio/degli apparecchi non concordata con noi.

ES Declaración de conformidad de la UE

El firmante confirma, en calidad de apoderado del fabricante GARDENA Germany AB, PO Box 7454, S-103 92 Estocolmo (Suecia), que el/los aparato(s) mencionado(s) a continuación cumple(n), en la versión lanzada al mercado por nuestra empresa, los requisitos de las directivas de la UE armonizadas, los estándares de seguridad de la UE y los estándares específicos del producto. La presente declaración perderá su validez si se modifica(n) el/los aparato(s) sin previa aprobación por nuestra parte.

PT Declaração CE de Conformidade

O abaixo-assinado, na qualidade de representante do fabricante, GARDENA Germany AB, PO Box 7454, S-103 92, Stockholm, Schweden, confirma que o(s) aparelho(s) a seguir designado(s) no modelo lançado por nós no mercado cumpre/cumprem os requisitos das diretivas UE harmonizadas, as normas de segurança UE e as normas específicas para estes produtos. Esta declaração perde a sua validade se forem realizadas alterações no(s) aparelho(s) sem o nosso consentimento.

PL Deklaracja zgodności UE

Niżej podpisany potwierdza jako upoważniony przedstawiciel producenta, spółki GARDENA Germany AB, PO Box 7454, S-103 92, Sztokholm, Szwecja, że określone poniżej urządzenie/-nia w wersji wprowadzonej przez nas do obrotu spełnia/-niają wymogi zharmonizowanych dyrektyw UE, norm bezpieczeństwa UE oraz norm dotyczących konkretnych produktów. Niniejsza deklaracja traci ważność w przypadku wprowadzania nieuzgodnionych z nami zmian urządzenia/ń.

HU EU megfelelőségi nyilatkozat

Az alulírott, a GARDENA Germany AB, Pf. 7454, S-103 92, Stockholm, Svédország megbízotti minőségében megerősíti, hogy az általunk alábbi kivitelben forgalomba hozott, lent nevezett eszköz(ök) megfelel(nek) az uniós irányelvekkel összhangba hozott nemzeti előírások követelményeinek, az EU biztonsági szabványainak és a konkrét termékre vonatkozó szabványoknak. Az eszköz(ök)nek velünk nem egyeztetett módosítása esetén ez a nyilatkozat érvényét veszti.

CS EU prohlášení o shodě

Podepsaná osoba zplnomocněná výrobcem GARDENA Germany AB, PO Box 7454, S-103 92, Stockholm, Švédsko potvrzuje, že v následujícím uvedený(-é) přístroj(-e) v provedení námi uvedeném na trh splňuje/splňují požadavky směrnic EU, bezpečnostních norem EU a norem specifických pro výrobek. V případě změny přístroje(-ů), která s námi nebyla dohodnuta, ztrácí toto prohlášení svou platnost.

SK EÚ vyhlásenie o zhode

Dolu podpísaný potvrdzuje, ako splnomocnený zástupca výrobcu, GARDENA Germany AB, PO Box 7454, S-103 92, Štokholm, Švédsko, že ďalej označené zariadenie/a vo vyhotovení uvedenom na trh spĺňa/jú požiadavky harmonizovaných smerníc EÚ, bezpečnostných štandardov EÚ a predpisov, špecifických pre dané výrobky. Pri zmene zariadenia/zariadení, ktorá nebola odsúhlasená našou spoločnosťou, stráca toto vyhlásenie platnosť.

EL Δήλωση συμμόρφωσης ΕΕ

Ο υπογεγραμμένος βεβαιώνει ως πληρεξούσιος του κατασκευαστή, της εταιρείας GARDENA Germany AB, Τ.Θ. 7454, S-103 92, Στοκχόλμη, Σουηδία, ότι η (οι) παρακάτω αναφερόμενη(ες) συσκευή(ές) στην έκδοση που τίθεται από εμάς σε κυκλοφορία πληροί/πληρούν τις απαιτήσεις των εναρμονισμένων οδηγιών της ΕΕ, προτύπων ασφαλείας της ΕΕ και των ειδικών για το προϊόν προτύπων. Σε περίπτωση τροποποίησης της (των) συσκευής(ών) χωρίς προηγούμενη συνεννόηση με την εταιρεία μας παύει να ισχύει η δήλωση.

SL Izjava EU o skladnosti

Spodaj podpisani kot pooblaščenec proizvajalca GARDENA Germany AB, PO Box 7454, S-103 92, Stockholm, Švedska, potrjuje, da v nadaljevanju označene naprave v izvedbi, v kakršni smo jih dali v promet, izpolnjujejo zahteve usklajenih direktiv EU, varnostnega standarda EU in standardov, ki veljajo za posamezne izdelke. V primeru spremembe naprave, ki ni usklajena z nami, ta izjava neha veljati.

HR EU izjava o sukladnosti

Dolje potpisani kao opunomoćenik proizvođača, tvrtke GARDENA Germany AB, PO Box 7454, S-103 92, Stockholm, Švedska, potvrđujemo da niže navedeni uređaj(i) odgovarajuće izvedbe koji/koje smo iznijeli na tržište ispunjavaju kriterije usklađenih direktiva EU i sigurnosnih standarda EU kao i standarda koji se tiču proizvoda. Ova izjava gubi valjanost u slučaju izmjena uređaja koje nisu prethodno ugovorene s nama.

RO Declarație de conformitate UE

Semnatarul, în calitatea sa de împuternicit al producătorului GARDENA Germany AB, PO Box 7454, S-103 92, Stockholm, Suedia, confirmă că aparatul (aparatele) descrise în cele ce urmează, în execuția pusă de noi pe piață îndeplinește (îndeplinesc) cerințele directivelor armonizate UE, ale standardelor de siguranță UE și ale standardelor specifice produsului. În cazul modificării fără aprobarea noastră prealabilă a aparatului (aparatelor), această declarație își pierde valabilitatea.

BG ЕС-Декларация за съответствие

Долуподписаният удостоверява като пълномощник на производителя GARDENA Germany AB, PO Box 7454, S-103 92, Стокхолм, Швеция, че по-долу описаният(ите) уред(и) във варианта на изпълнение пуснат от нас на пазара изпълнява/изпълняват изискванията на хармонизираните ЕС-директиви, ЕС-норми за безопасност и специфичните норми за продукцията. В случай на промяна на уреда(ите), която не е съгласувана с нас, тази декларация губи своята валидност.

ET EL-i vastavusdeklaratsioon

Allakirjutanu kinnitab tootja, GARDENA Germany AB, PO Box 7454, S-103 92, Stockholm, Rootsi, poolt volitatud isikuna, et järgnevalt nimetatud seade (seadmed) täidab (täidavad) meie poolt turule toodud versiooni kujul harmoneeritud EL-i direktiivide, EL-i ohutusstandardite ja tootepõhiste standardite nõuded.
Seadmel (seadmetel) meiega kooskõlastamata muudatuse tegemise korral kaotab käesolev deklaratsioon oma kehtivuse.

LT ES atitikties deklaracija

Pasirašantysis, kaip gamintojo, GARDENA Germany AB, PO Box 7454, S-103 92, Stokholmas, Švedija, įgaliotasis atstovas patvirtina, kad žemiau nurodyto (-ų) prietaiso (-ų) modeliai, kurie buvo pagaminti mūsų gamyklose, atitinka darniąsias ES direktyvas, ES saugumo standartus ir specifinius gaminio standartus.
Atlikus bet kokį prietaiso (-ų) pakeitimą, kuris nėra suderintas su mumis, ši deklaracija praranda galiojimą.

LV ES atbilstības deklarācija

Zemā parakstījusies persona kā ražotāja, uzņēmuma GARDENA Germany AB, PO Box 7454, S-103 92, Stokholma, Zviedrija, pilnvarotais pārstāvis apstiprina, ka tālāk norādītā(-s) ierice(-s) izpildījumā, kādā mēs to (tās) esam laiduši tirgū, atbilst saskaņotajām ES direktīvām, ES drošības standartiem un konkrētajam produktam noteiktajiem standartiem.
Ierīcē(-s) veicot ar mums nesaskaņotas izmaiņas, šī deklarācija zaudē savu spēku.

Produktbezeichnung:	**Klarwasser-Tauchpumpe / Schmutzwasser-Tauchpumpe**
Description of the product:	**Clear Water Submersible Pump / Dirty Water Submersible Pump**
Désignation du produit :	**Pompe d'évacuation pour eaux claires / Pompe d'évacuation pour eaux sales**
Beschrijving van het product:	**Schoonwaterpomp / Vuilwaterpomp**
Beskrivning av produkten:	**Dränkbar pump för rent vatten / Dränkbar pump för smutsvatten**
Beskrivelse af produktet:	**Rentvands-dykpumpe / Spildevands-dykpumpe**
Tuotteen kuvaus:	**Puhtaan veden uppopumppu / Likaveden uppopumppu**
Descrizione del prodotto:	**Pompa sommersa per acqua pulita / Pompa sommersa per acqua sporca**
Descripción del producto:	**Bomba sumergible para agua limpia / Bomba sumergible para agua residual**
Descrição do produto:	**Bomba submersível de água limpa / Bomba submersível de água suja**
Opis produktu:	**Pompa zanurzeniowa do czystej wody / Pompa zanurzeniowa do brudnej wody**
A termék leírása:	**Búvárszivattyú tiszta vízhez / Búvárszivattyú szennyezett vízhez**
Popis výrobku:	**Ponorné čerpadlo na čistou vodu / Ponorné čerpadlo na špinavou vodu**
Popis produktu:	**Ponorné čerpadlo na čistú vodu / Ponorné čerpadlo na znečistenú vodu**
Περιγραφή του προϊόντος:	**Υποβρύχια αντλία καθαρού νερού / Υποβρύχια αντλία λυμάτων**
Opis izdelka:	**Potopna črpalka za čisto vodo / Potopna črpalka za umazano vodo**
Opis proizvoda:	**Uronska pumpa za čistu vodu / Uronska pumpa za prljavu vodu**
Descrierea produsului:	**Pompă submersibilă pentru apă curată / pompă submersibilă pentru apă murdară**
Описание на продукта:	**Потопяема помпа за чиста вода / Потопяема помпа за мръсна вода**
Toote kirjeldus:	**Selge vee sukelpump / Reovee sukelpump**
Gaminio aprašas:	**Panardinamas švaraus vandens siurblys / Panardinamas purvino vandens siurblys**
Izstrādājuma apraksts:	**Iegremdējamais tīrā ūdens sūknis / Iegremdējamais noteküdens sūknis**

Produkttyp:	Terméktípus:	Artikelnummer:	Cikkszámok:
Product type:	Druh výrobku:	Article number:	Objednací číslo:
Type de produit :	Typ produktu:	Référence :	Objednávacie číslo:
Producttype:	Τύπος	Artikelnummer:	Κωδικός είδους:
Produkttyp:	προϊόντος:	Artikelnummer:	Številka izdelka:
Produkttype:	Vrsta izdelka:	Artikelnummer:	Kataloški broj:
Tuotetyyppi:	Vrsta proizvoda:	Tuotenumero:	Cod articol:
Tipo di prodotto:	Tip produs:	Codice articolo:	Артикул номер:
Tipo de producto:	Тип продукт:	Referencia:	Artiklinumber:
Tipo de produto:	Tootetüüp:	Número de referência:	Dalies numeris:
Typ produktu:	Gaminio tipas:	Numer katalogowy:	Artikula numurs:
	Produkta veids:		

11000CLEAR
17000CLEAR
20000DIRT

9034
9036
9044

Anbringungsjahr der CE-Kennzeichnung:	Godina dobivanja CE oznake:
Year of CE marking:	Anul de marcare CE:
Année d'apposition du marquage CE :	Година на поставяне на CE-маркировка:
Installatiejaar van de CE-aanduiding:	CE-märgistuse paigaldamise aasta:
Märkningsår:	Metai, kada pažymėta CE-ženklu:
CE-Mærkningsår:	CE-marķējuma uzlikšanas gads:
CE-merkin kiinnitysvuosi:	
Anno di applicazione della certificazione CE:	
Colocación del distintivo CE:	
Ano de marcação pela CE:	
Rok nadania oznakowania CE:	
CE-jelzés elhelyezésének éve:	
Rok umístění značky CE:	
Rok udelenia značky CE:	
Έτος σήματος CE:	
Leto namestitve CE-oznake:	**2020**

EU-Richtlinien:	Οδηγίες ΕΚ:
EC-Directives:	Direktive EU:
Directives CE :	EC direktive:
EG-richtlijnen:	Directive CE:
EU-direktiv:	Директиви на ЕО:
EF-direktiver:	EÜ direktiivid:
EY-direktiivit:	EB direktyvos:
Direttive UE:	EK direktīvas:
Directiva CE:	
Direktivas CE:	
Dyrektywy WE:	**2011/65/EG**
EK-irányelvek:	**2014/30/EU**
Předpisy ES:	**2006/42/EG**
Smernice EÚ:	

Harmonisierte EN-Normen /
Harmonised EN:

EN ISO 12100
EN 60335-1
EN 60335-2-41

Hinterlegte Dokumentation:
GARDENA-Technische Dokumentation,
M. Kugler, 89079 Ulm

Deposited Documentation:
GARDENA Technical Documentation,
M. Kugler, 89079 Ulm

Documentation déposée:
Documentation technique GARDENA,
M. Kugler, 89079 Ulm

Ulm, den 30.12.2020	Der Bevollmächtigte
Ulm, 30.12.2020	Authorised representative
Fait à Ulm, le 30.12.2020	Le mandataire
Ulm, 30-12-2020	De gevolmachtigde
Ulm, 2020.12.30.	Auktoriserad representant
Ulm, 30.12.2020	Autoriseret repræsentant
Ulmissa, 30.12.2020	Valtuutettu edustaja
Ulm, 30.12.2020	Persona delegata
Ulm, 30.12.2020	La persona autorizada
Ulm, 30.12.2020	O representante
Ulm, dnia 30.12.2020	Pełnomocnik
Ulm, 30.12.2020	Meghatalmazott
Ulm, 30.12.2020	Zplnomocněnec
Ulm, dňa 30.12.2020	Splnomocnený
Ulm, 30.12.2020	Ο εξουσιοδοτημένος
Ulm, 30.12.2020	Pooblaščenec
Ulm, dana 30.12.2020	Ovlaštena osoba
Ulm, 30.12.2020	Conducerea tehnică
Улм, 30.12.2020	Упълномощен
Ulm, 30.12.2020	Volitatud esindaja
Ulm, 30.12.2020	Įgaliotasis atstovas
Ulme, 30.12.2020	Pilnvarotā persona

Reinhard Pompe
Vice President

Deutschland / Germany
GARDENA
Manufacturing GmbH
Central Service
Hans-Lorenser-Straße 40
D-89079 Ulm
Produktfragen:
(+49) 731 490 - 123
Reparaturen:
(+49) 731 490 - 290
service@gardena.com
http://www.gardena.com

Albania
KRAFT SHPK
Autostrada Tirane-Durres
Km 7
1051 Tirane

Argentina
ROBERTO C. RUMBO S.R.L.
Predio Norlog
Lote 7
Benavidez. ZC:1621
Buenos Aires
ventas@rumbosrl.com.ar

Australia
Husqvarna Australia Pty. Ltd.
Locked Bag 5
Central Coast BC
NSW 2252
Phone: (+61) (0) 2 4352 7400
customer.service@
husqvarna.com.au

Austria / Österreich
Husqvarna Austria GmbH
Industriezeile 36
4010 Linz
Tel.: (+43) 732 77 01 01 - 485
service.gardena@
husqvarnagroup.com

Azerbaijan
Firm Progress
a. Aliyev Str. 26A
1052 Baku

Belarus
Private Enterprise
"Master Garden"
Minsk
Sharangovich str., 7a
Phone: (+375) 17 257-00-33
Mob.: (+375) 29 676-16-09
mg@mastergarden.by

Belgium
Husqvarna Belgium nv
Gardena Division
Leuvensesteenweg 542
Planet II E
1930 Zaventem
België

Bosnia / Herzegovina
SILK TRADE d.o.o.
Industrijska zona Bukva bb
74260 Tešanj

Brazil
Husqvarna do Brasil Ltda
Av. Francisco Matarazzo,
1400 – 13º andar
São Paulo – SP
CEP: 05001-903
Tel: 0800-112252
marketing.br.husqvarna@
husqvarna.com.br

Bulgaria
AGROLAND Бълг рия АД
бул. 8 Декември, №13
Офис 5
1700 Студентски гр д
София
Тел.: (+359) 24 66 69 10
info@agroland.eu

Canada / USA
GARDENA Canada Ltd.
100 Summerlea Road
Brampton, Ontario L6T 4X3
Phone: (+1) 905 792 93 30
info@gardenacanada.com

Chile
REPRESENTACIONES
JCE S.A.
Av. Del Valle Norte 857,
Piso 4
Santiago RM
Phone: (+56) 2 24142560
contacto@jce.cl

China
Husqvarna (Shanghai)
Management Co., Ltd.
富世华（上海）管理有限公司
3F, Benq Square B,
No207, Song Hong Rd.,
Chang Ning District,
Shanghai
PRC. 200335
上海市长宁区淞虹路207号明基广场B座3楼，邮编：200335

Colombia
Husqvarna Colombia S.A.
Calle 18 No. 68 D-31, zona
Industrial de Montevideo
Bogotá, Cundinamarca
Tel. 571 2922700 ext. 105
jairo.salazar@
husqvarna.com.co

Costa Rica
Compania Exim
Euroiberoamericana S.A.
Los Colegios, Moravia,
200 metros al Sur del Colegio
Saint Francis – San José
Phone: (+506) 297 68 83
exim_euro@racsa.co.cr

Croatia
Husqvarna Austria GmbH
Industriezeile 36
4010 Linz
Tel.: (+43) 732 77 01 01 - 485
service.gardena@
husqvarnagroup.com

Cyprus
Med Marketing
17 Digeni Akrita Ave
P.O. Box 27017
1641 Nicosia

Czech Republic
Husqvarna Česko s.r.o.
Türkova 2319/5b
149 00 Praha 4 – Chodov
Bezplatná infolinka:
800 100 425
servis@cz.husqvarna.com

Denmark
GARDENA DANMARK
Lejrvej 19, st.
3500 Værløse
Tlf.: (+45) 70 26 47 70
husqvarna@husqvarna.dk
www.gardena.com/dk

Dominican Republic
BOSQUESA, S.R.L
Carretera Santiago Licey
Km. 5 ½
Esquina Copal II.
Santiago
Dominican Republic
Phone: (+809) 736-0333
joserbosquesa@claro.net.do

Ecuador
Husqvarna Ecuador S.A.
Arupos E1-181 y 10 de
Agosto Quito, Pichincha
Tel. (+593) 22800739
francisco.jacome@
husqvarna.com.ec

Estonia
Husqvarna Eesti OÜ
Valdeku 132
EE-11216 Tallinn
info@gardena.ee

Finland
Oy Husqvarna Ab
Gardena Division
Lautatarhankatu 8 B / PL 3
00581 HELSINKI
www.gardena.fi

France
Husqvarna France
9/11 Allée des pierres mayettes
92635 Gennevilliers Cedex
France
http://www.gardena.com/fr
N° AZUR : 0 810 00 78 23
(Prix d'un appel local)

Georgia
Transporter LLC
113b Beliashvili street
0159 Tbilisi, Georgia

Great Britain
Husqvarna UK Ltd
Preston Road
Aycliffe Industrial Park
Newton Aycliffe
County Durham
DL5 6UP
info.gardena@
husqvarna.co.uk

Greece
Π. ΠΑΠΑΔΟΠΟΥΛΟΣ ΑΕΒΕ
Λεωφ. Αθηνών 92
Αθήνα
Τ.Κ.104 42
Ελλάδα
Τηλ. (+30) 210 51 93 100
info@papadopoulos.com.gr

Hungary
Husqvarna Magyarország Kft.
Ezred u. 1 - 3
1044 Budapest
Telefon: (+36) 1 251-4161
vevoszolgalat.husqvarna@
husqvarna.hu

Iceland
BYKO ehf.
Bildshöfoa 20
110 Reykjavik

Ireland
Husqvarna UK Ltd
Preston Road
Aycliffe Industrial Park
Newton Aycliffe
County Durham
DL5 6UP
info.gardena@
husqvarna.co.uk

Italy
Husqvarna Italia S.p.A.
Via Santa Vecchia 15
23868 VALMADRERA (LC)
Phone: (+39) 0341.203.111
assistenza.italia@
it.husqvarna.com

Japan
Husqvarna Zenoah Co., Ltd.
1-9 Minamidai
Kawagoe
350-1165 Saitama
gardena-jp@
husqvarnagroup.com

Kazakhstan
LAMED Ltd.
155/1, Tazhibayevoi Str.
050060 Almaty
IP Schmidt
Abayavenue 3B
110 005 Kostanay

Korea
Kyung Jin Trading CO.,LTD.
107-4, SunDuk Bld.,
YangJae-dong,
Seocho-gu,
Seoul, (zipcode: 137-891)
Phone: (+82) (0)2 574-6300

Latvia
Husqvarna Latvija SIA
Ulbrokas 19A
LV-1021 Rīga
info@gardena.lv

Lithuania
UAB Husqvarna Lietuva
Ateities pl. 77C
LT-52104 Kaunas
info@gardena.lt

Luxembourg
Magasins Jules Neuberg
39, rue Jacques Stas
Luxembourg-Gasperich 2549
Case Postale No. 12
Luxembourg 2010
Phone: (+352) 40 14 01
api@neuberg.lu

Mexico
AFOSA
Av. Lopez Mateos Sur # 5019
Col. La Calma 45070
Zapopan, Jalisco
Mexico
Phone: (+52) 33 3818-3434
icornejo@afosa.com.mx

Moldova
Convel S.R.L.
290A Muncesti Str.
2002 Chisinau

Netherlands
Husqvarna Nederland B.V.
GARDENA Division
Postbus 50131
1305 AC ALMERE
Phone: (+31) 36 521 00 10
info@gardena.nl

Neth. Antilles
Jonka Enterprises N.V.
Sta. Rosa Weg 196
P.O. Box 8200
Curaçao
Phone: (+599) 9 767 66 55
pgm@jonka.com

New Zealand
Husqvarna New Zealand Ltd.
PO Box 76-437
Manukau City 2241
Phone: (+64) (0) 9 9202410
support.nz@husqvarna.co.nz

Norway
Husqvarna Norge AS
Gardena Division
Trøskenveien 36
1708 Sarpsborg
info@gardena.no

Peru
Husqvarna Perú S.A.
Jr. Ramón Cárcamo 710
Lima 1
Tel: (+51) 1 3320400 ext. 416
juan.remuzgo@
husqvarna.com

Poland
Husqvarna
Poland Spółka z o.o.
ul. Wysockiego 15 b
03-371 Warszawa
Phone: (+48) 22 330 96 00
gardena@husqvarna.com.pl

Portugal
Husqvarna Portugal, SA
Lagoa - Albarraque
2635 - 595 Rio de Mouro
Tel.: (+351) 21 922 85 30
Fax : (+351) 21 922 85 36
info@gardena.pt

Romania
Madex International Srl
Soseaua Odaii 117-123,
RO 013603 Bucureşti, S 1
Phone: (+40) 21 352.76.03
madex@ines.ro

Russia / Россия
ООО „Хускв рн "
141400, Московск я обл.,
г. Химки,
улиц Ленингр дск я,
вл дение 39, стр.6
Бизнес Центр
„Химки Бизнес П рк",
помещение ОВ02_04
http://www.gardena.ru

Serbia
Domel d.o.o.
Autoput za Novi Sad bb
11273 Belgrade
Phone: (+381) 11 8 48 88 12
miroslav.jejina@domel.rs

Singapore
Hy-Ray PRIVATE LIMITED
40 Jalan Pemimpin
#02-08 Tat Ann Building
Singapore 577185
Phone: (+65) 6253 2277
shiying@hyray.com.sg

Slovak Republic
Husqvarna Česko s.r.o.
Türkova 2319/5b
149 00 Praha 4 – Chodov
Bezplatná infolinka: 800 154 044
servis@sk.husqvarna.com

Slovenia
Husqvarna Austria GmbH
Industriezeile 36
4010 Linz
Tel.: (+43) 732 77 01 01 - 485
service.gardena@
husqvarnagroup.com

South Africa
Husqvarna South Africa (Pty) Ltd
Postnet Suite 250
Private Bag X6,
Cascades, 3202, South Africa
Phone: (+27) 33 846 9700
info@gardena.co.za

Spain
Husqvarna España S.A.
Calle de Rivas nº 10
28052 Madrid
Phone: (+34) 91 708 05 00
atencioncliente@gardena.es

Suriname
Deto Handelmaatschappij N.V.
Kernkampweg 72-74
P.O.Box: 12782
Paramaribo – Suriname
South America
Phone: (+597) 438050
www.deto.sr

Sweden
Husqvarna AB /
GARDENA Sverige
Drottninggatan 2
561 82 Huskvarna Sverige

Switzerland / Schweiz
Husqvarna Schweiz AG
Consumer Products
Industriestrasse 10
5506 Mägenwil
Phone: (+41) (0) 62 887 37 90
info@gardena.ch

Turkey
Dost Bahçe Dış Ticaret
Mümessillik A.Ş
Yunus Mah. Adil Sok. No:3
Ic Kapi No: 1 Kartal
34873 Istanbul
Phone: (+90) 216 38 93 939
info@dostbahce.com.tr

Ukraine / Україна
ТОВ «Хускв рн Укр їн »
вул. В сильківськ , 34,
офіс 204-г
03022, м. Київ
Тел. (+38) 0 800 504 804
info@gardena.ua

Uruguay
FELI SA
Entre Ríos 1083 CP 11800
Montevideo – Uruguay
Tel: (+598) 22 03 18 44
info@felisa.com.uy

Venezuela
Corporación Casa y Jardín C.A.
Av. Caroní, Edif. Trezmen, PB.
Colinas de Bello Monte.
1050 Caracas.
Tlf: (+58) 212 992 33 22
info@casayjardin.net.ve

9034-20.960.02/0121
© GARDENA Manufacturing GmbH
D-89079 Ulm
http://www.gardena.com