KENWOOD

SERVICE MANUAL

R-2000 DCK-1

COMMUNICATIONS RECEIVER

CONTENTS

SPECIFICATIONS 2
CIRCUIT DESCRIPTION 3
PARTS LIST 11
PC BOARD VIEW AND SCHEMATIC DIAGRAM
RX UNIT (X55-1340-00) 16
PLL UNIT (X50-1920-00) 18
SWITCH UNIT (X41-1480-00) 20
SCHEMATIC DIAGRAM 21
DISASSEMBLY 22
PACKING 23
ADJUSTMENT 24
ADJUSTMENT POINT 29
TERMINAL FUNCTION 30
BLOCK DIAGRAM 31
DCK-1 (OPTION) ..... BACK COVER

SPECIFICATIONS

Frequency Range: 150 kHz ~ 30 MHz
150 kHz ~ 26 MHz (W2 type)
2 MHz ~ 30 MHz (X type)
Mode: AM, FM, SSB (USB/LSB), CW
Sensitivity: (0 dBμ = 1 μV)

Mode \ Frequency	150 kHz ~ 2 MHz	2 MHz ~ 30 MHz
SSB/CW (S+N/N 10 dB)	Less than 2 μV	Less than 0.4 μV
AM (S+N/N 10 dB)	Less than 20 μV	Less than 4 μV
FM (S+N/N 20 dB)	–	Less than 1 μV

Selectivity:

Mode \ Selectivity	Selectivity	
AM-WIDE	6 kHz (–6 dB)	18 kHz (–50 dB)
AM-NARROW	2.7 kHz (–6 dB)	5 kHz (–50 dB)
SSB/CW	2.7 kHz (–6 dB)	5 kHz (–50 dB)
CW-NARROW	500 Hz (–6 dB)*	820 Hz (–60 dB)*
FM	15 kHz (–6 dB)	30 kHz (–50 dB)

*: with YG-455C optional CW crystal filter

Symbol	Destination
K	U. S. A
M	General market
T	Britain
W	Europe
X	Australia & New Zealand

Image Ratio: Better than 70 dB
IF Rejection: Better than 70 dB
Frequency Stability: Within ±300 Hz during the first hour after 1 minute of warm-up.
Within ±50 Hz during any 30 minutes period thereafter.
Frequency Accuracy: $\pm 10 \times 10^{-6}$ or better (at normal temperatures)
Squelch Sensitivity: (threshold, 0 dBμ = 1 μV)
AM/SSB/CW = Less than 3.12 μV
FM = Less than 0.5 μV
Audio Load Impedance: 4Ω to 16Ω
Audio Output Power: 1.5W (8Ω load, 10% distortion)
Antenna Impedance: 50Ω/500Ω
Power Consumption: (at no signal) = 14W AC
13.8V DC, 0.6A (with optional DCK-1)
(at Memory Back-up) = 3W AC
13.8V DC, 0.1A (with optional DCK-1)
Power Requirements: 100/120/220/240V AC, 50/60 Hz
13.8V DC (with optional DCK-1)
Dimensions: 375 (14.8) W × 115 (4.5) H × 210 (8.3) D mm (inch)
Weight: 5.5 kg (12.1 lbs.) approx.

CIRCUIT DESCRIPTION

RX unit X55-1340-00

R-2000 is a triple conversion general coverage receiver with a first IF of 45.85 ~ 45.90 MHz, 9.85 ~ 9.90 MHz second IF and a 455 kHz third IF.

Both low (50Ω) or high (500Ω) impedance antenna terminals are provided for all bands.

The signal supplied through the antenna terminal goes to the antenna fuse (100 mA) and three step RF attenuator (10, 20, and 30 dB). It next enters the BPF (Band Pass Filter), which divides the 0.15 ~ 30 MHz range into 6 bands; 0.15 MHz ~ 1 MHz, 1 MHz ~ 2 MHz, 2 MHz ~ 4 MHz, 4 MHz ~ 8 MHz, 8 MHz ~ 17 MHz and 17 MHz ~ 30 MHz. Q58: SN74LS145N converts the BCD band data signal from the PLL control circuit to select the appropriate BPF for the frequency selected.

Exiting the BPF, the signal, is fed to RF amp Q1: 3SK73(GR), first IF trap (operating at 40.875 MHz) and emitter follower Q2: 2SC1815 (Y).

The RF signal is mixed with the first local oscillator 45.9 ~ 75.85 MHz and converted to the 45.85 ~ 45.90 MHz first IF by balanced mixer Q3 and Q4: 3SK73(GR).

Q3 and Q4 drain voltage is supplied through a switching circuit consisting of Q5 and Q6 controlled by Q47 and Q48: 2SC1815 (Y) will turn off when the VHB signal is applied from the PLL control circuit in the (optional) VHF reception mode. At the same time, the first IF circuit input is switched to the converter by switching diodes D13 and D14: 1S2588.

After passing the first IF LC filter the signal is converted to the 9.85 ~ 9.90 MHz second IF by the second balanced mixer Q7 and Q8: 3SK74(L) using the 36 MHz second local oscillator injection signal.

The second IF signal passes through ceramic filter F1 (*f*o: 9.875 MHz) and is converted to the 455 KHz third IF by the third balanced mixer Q9 and Q10: 3SK73(GR) using the 9.445 ~ 9.395 MHz third local oscillator injection signal.

The signal is applied to the NB gate D15, 16. A part of the signal is also applied to the NB (Noise Blanker) amplifiers on the PLL unit via buffer Q11: 2SC1815(Y). The signal output from the NB gate is switched to the appropriate bandwidth third IF filter (F2 ~ F5 of 455 kHz), then fed to the third IF amplifiers.

The IF filter bandwidths are: F3; 2.7 kHz, F4; 6 kHz and F5; 15 kHz. Filter F3 is used in the AM narrow, SSB and CW wide modes, F4 in the AM wide mode and F5 in the FM mode. Filter position F2 is provided for the CW narrow mode and an optional YG-455C or YG-455CN filter can be used.

The third IF amplifiers are divided into two systems; one for the FM mode and one for all other modes.

In the FM mode, the signal passing through F5 is amplified by Q32: TA7060P, Q33: 2SC1675(L) and Q34 : μPC577H, then detected by ceramic discriminator F6, and diodes D41 and 42.

The noise component of the detected signal is amplified by Q35 and Q36: 2SC1775(E), rectified (D44 and 45), DC amplified (Q37 and 38), then applied to squelch gate switch Q41: 2SC1815(Y), center stop control Q40: 2SC1815(Y) and BUSY LED switch Q42 and Q43: 2SC1815(Y).

The DC voltage which is generated from the discriminator (F6) is fed to window comparator Q39: NJM4558D which forms an AND circuit together with Q40 and generates the Program Scan center stop signal which is applied to the PLL control circuit via Q46: 2SC1815(Y). The FM IF signal from Q33 is amplified by Q59: 2SC1815(Y) and detected by D39 and D40: 1N60 to drive the S meter.

In all modes other than FM, the signal which has passed F2 through F4 are amplified by Q12 and Q13: 3SK73(GR). A sample of the IF signal is buffer by Q14: 2SC1815(Y) and is AM detected by D29: 1N60, buffered by Q15, and diode switched by D30 to the squelch-controlled switch Q16. Output from Q14 is also rectified by D37 and D38: 1N60. This signal is also split: the rectified output is both AGC amplified by Q23: 2SC1815(Y) and squelch amplified by Q28: 2SC1815(Y), Q29: 2SK192A(GR), Q30: 2SA1015(Y) and Q31: 2SC1815(Y). Q24 (CW and SSB) and Q25 (AM) 2SC1815(Y) select the AGC slow time constant by mode. AGC is applied dack to the RF and IF amplified. The AGC voltage is also amplified by Q50: 2SK192A(GR) and Q51: 2SA1015(Y) to drive the S meter. Q26 and Q27: 2SC1815(Y) switch off power to the AM, CW, and SSB IF amplifiers and squelch amplifiers in the FM mode. The output of the squelch amplifiers (Q31) is applied to the BUSY LED switch Q44: 2SC1815(Y), scan stop switch Q45: 2SC1815(Y) and squelch gate Q16: 2SC2240(GR).

Q21: 2SC1815(Y) is the BFO circuit oscillator and Q22: 2SC1815(Y) the buffer. The BFO output is applied to the product detector D25 ~ D28 (1N60). Q20: 2SC1815(Y) is the LSB frequency shift switch.

The AM signal detected by D29 is buffered by Q15: 2SC2240(GR), and the audio signal is selected according to mode by either D30 (for AM) or D31 (for SSB and CW). This is fed through switch Q16 to audio amplifier Q17: 2SC2240(GR). The FM audio signal passes squelch gate Q52: 2SC2240(GR) and then goes to Q17.

Audio amplified by Q17 is first fed to the VOLUME and TONE controls. Q18: 2SC2240(GR) provides output to the REC jack.

The audio signal, having passed the VOLUME and TONE controls, is power amplified by Q57: HA1368R to drive the speaker.

As accessory circuits, a BEEP oscilator circuit (Q55 and 56) and standby mute circuit (Q49, 60 and 61) are provided.

In the mute mode, Q49: 2SC1815(Y) decreases the RB (receive B+) line to −6V to mute all modes except FM. The RB line then controls Q60 and 61 to disrupt FMB (FM B+) to Q33, which effectively mutes the FM mode.

The power supply circuits consists of a 9V AVR (automatic voltage regulator) Q54: AN7809 and a 14V ripple filter Q53.

Item	Rating
Nominal center frequency	within 9.875 MHz ± 30 kHz
3 dB bandwidth	within 130 ± 30 kHz
20 dB bandwidth	350 kHz or less
Loss	8 dB or less
Spurious response (within 9.875 ± 2 MHz) (within 8.965 ± 25 KHz)	 30 dB or more 40 dB or more
Input and output impedance	330Ω

Table 1. Ceramic filter (L72-0338-05) RX unit F1

CIRCUIT DESCRIPTION

Item	Rating
Center frequency	455 kHz ±0.6 kHz
6 dB band width	2.8 ±0.3 kHz
40 dB band width	5.5 kHz or less
Insertion loss (at maximum output)	6.0 dB or less
Guaranteed attenuation (within 455 ±100 kHz)	55 dB or more
Spurious attenuation (within 0.1 to 1.0 MHz) for 600 to 700 kHz	45 dB or more 40 dB or more
I/O matching impedance	2.0 kΩ

Table 2. Ceramic filter (L72-0332-05, RX unit F3) SSB, AM-N, CW-W

Item	Rating
Nominal center frequency	455 kHz
6 dB band width	±3 kHz or more (from 455 kHz)
50 dB band width	±9 kHz or less (from 455 kHz)
Ripple (within 455 ±2 kHz)	2 dB or less
Insertion loss	6 dB or less
Guaranteed attenuation (within 455 ±100 kHz)	60 dB or more
I/O matching impedance	2.0 kΩ

Table 3. Ceramic filter (L72-0319-05, RX unit F4) AM-W

Item	Rating
Nominal center frequency	455 kHz
6 dB bandwidth	±7.5 kHz or more
50 dB bandwidth	±15 kHz or less
Ripple (within 455 ± 5 kHz)	3 dB or less
Loss	6 dB or less
Guaranteed attenuation (within 455 ± 100 kHz)	35 dB or more
Input and output impedance	1.5 kΩ

Table 4. Ceramic filter (L72-0316-05, RX unit F5) FM

Item	Rating
Center frequency fo	455.7 kHz
Center frequency deviation	fo ±50 Hz at 6 dB
6 dB bandwidth	±250 Hz or more
60 dB bandwidth	±425 Hz or less
Ripple	2 dB or less
Loss	6 dB or less
Guaranteed attenuation	80 dB or more at 100 Hz to 455.1 kHz and 456.3 kHz to 2 MHz
Imput and output impedance	2 kΩ // 15 pF

Table 5. CW Crystal filter (L71-0206-05) YG-455C (Option)

Item	Rating
Center frequency quency fo	455.7 kHz
Center frequency deviation	fo ±50 Hz at 6 dB
6 dB bandwidth	±125 Hz or more
60 dB bandwidth	±250 Hz or less
Ripple	2 dB or less
Loss	6 dB or less
Guaranteed attenuation	80 dB or more at 100 Hz to 455.3 kHz and 456.1 kHz to 2 MHz
Input and output impedance	2 kΩ // 15 pF

Table 6. CW Crystal filter (L71-0207-05) YG-455CN (Option)

PLL (Phase locked loop) unit X50-1920-00

The PLL unit houses the PLL oscillator circuit, microprocessor control circuit and the NB amplifier circuits. In the PLL circuit, there is a 9 MHz reference frequency crystal oscillator, the first local oscillator (45.90 ~ 75.85 MHz), second local oscillator (36 MHz) and third local oscillator (9.395 ~ 9.445 MHz), which are output to the Receiver unit.
The digital circuit peripheral to the microprocessor controls the PLL circuit frequency, display, clock/timer, input interface, rotary encoder mode (speed) and memory.

1. **PLL circuit**
   1) Reference frequency oscillator
      Q1 operates at a reference frequency of 9 MHz, which is supplied to the second and third local oscillator circuits through buffer Q2.
      Via buffer Q3, a 4.5 MHz signal divided 1/2 by IC1 is supplied through buffer Q4 to the first local oscillator PLL circuit. The reference frequency is also buffered (Q6) and divided down to 1 kHz by IC2 for use as a clock reference signal.
   2) First local oscillator circuit (LO1)
      The first local oscillator is obtained from the PLL (Phase Locked Loop) circuit. Three VCOs (Voltage Controlled Oscillator) controlled by the microprocessor through Q20 ~ 22 cover the 45.90 ~ 75.85 MHz frequency range. The VCO output is amplified by Q26, Q27 and Q28. Part of the signal is applied to buffer Q16: 2SC1907 and PLL IC5: MN6147C. The spurious component is eliminated from the remaining signal by a BPF and is output via buffer Q29 and Q30: 2SC1707 as the LO1 signal.
      IC5: MN6147C consists of a programmable frequency divider, reference frequency divider and phase comparator which compares the reference and VCO frequencies (comparision frequency; 25 kHz). The programmable divider's ratio (1836 ~ 3034; only even number) is controlled by the microprocessor.
      The phase error signal from the comparator is applied to the VCO by active filter Q17, Q18 and Q19: 2SC1775.
   3) Second local oscillator (LO2)
      The reference frequency is quadrupled by Q5: 2SC1815 to obtain the 36 MHz second local oscillation frequency.

CIRCUIT DESCRIPTION

4) Third local oscillator (LO3)
This circuit consists of PLL IC2: MN6147C which incorprates a 5 kHz PLL and mixer. One VCO is provided; the frequency range is 39.505 ~ 44.500 MHz and the dividing ratio range is 7901 ~ 8900. This PLL circuit is composed of VCO Q11: 2SC1923, PLL IC2: MN6147C and a loop filter consisting of Q8, Q9 and Q10: 2SC1775. The VCO output is buffered (Q12), divided 1/100 to 395.05 ~ 455.00 kHz by IC3: MN54459L, buffered (Q13) and mixed with the 9 MHz reference signal by IC4: SN16913P to obtain the 9.39505 ~ 9.445 MHz third local oscillator frequency. This is filtered (CF1) and amplified (Q15), then sent to the Receiver unit.

5) Unlock muting
The output from PLL IC2 pin 2 (unlock) becomes an unlock signal through IC21: TA7324P and Q71, and is used to control the audio muting circuit on Switch unit "B" to reduce or eliminate any pulse noise which may be generated when the frequency is changed and the PLL momentarily resets.

2. Control unit

1) Rotary encoder input circuit
On the Encoder unit, a 50 slit rotary disc and 2 photointerruptors generate 2 clock signals having a 90° phase difference, which are input to the Control unit via the EN1 and EN2 lines. These clock signals are waveform shaped by IC6, quadrupled by the gate circuit consisting of IC7 and 8 (the 50 pulse/rev signal is changed to a 200 pulse/rev signal), and applied IC12, through Flip-Flop IC9 1/4 to the microprocessor pin No. 39 (T1 port). At the same time, the encoder's rotational dirction is detected from the clock pulses by the FF circuit IC9 1/4 and is input to microprocessor pin 29 (Port 37). The waveforms at each point are shown in Fig. 1.

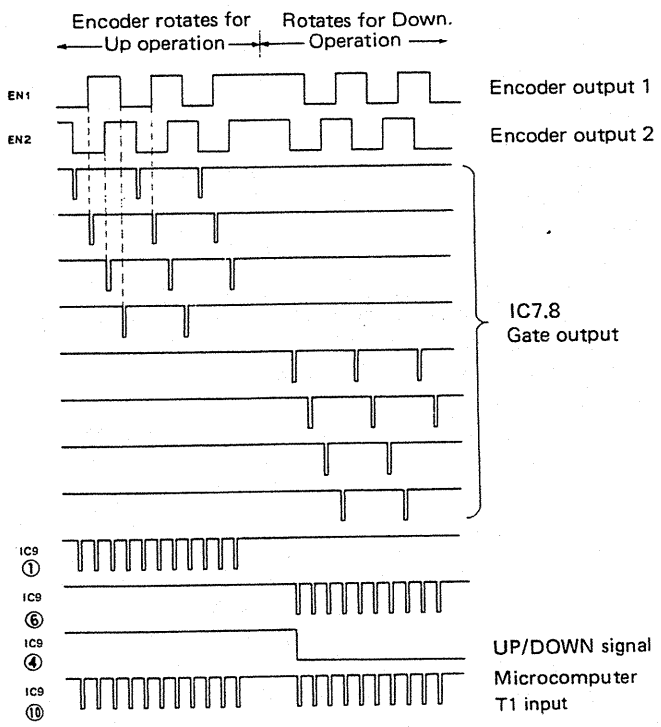

Fig. 1 Encoder output to micro-processor input timing and waveforms

2) Program scan circuit
IC10 on the Control circuit is an astable multivibrator circuit controlled by the PG. SCAN switch. Both its output, and the clock signal are applied to the microprocessor T1 port.
During scan, the multivibrator oscillators output pulse train is accessed by ICs 9 1/4, 10 1/4 and 11 1/2, while the oscillator stops in the HOLD mode and only the Encoder clock pulse is available.
The oscillator frequency is determined by C173, C174, R145 and VR1. When the tuning speed is SLOW or MID, the oscillator frequency is approximately 10 ~ 18 Hz. When it is FAST, Q34 turns on and the oscillator frequency is approximately 5 ~ 9 Hz.

3) Clock circuit
A 1 kHz clock signal is output from PLL IC2 (pin 6), waveform shaped by IC17 1/4 and applied to the microprocessor INT port (pin No. 6) to count the time.
When the HOUR and MINUTE switches are depressed simultaneously the time display shows 00:00. In CLOCK 1 mode, the time display stops flashing and the clock begins counting the seconds (which are not shown) when the switches are depressed. When the display is flashing, the HOUR and MINUTE switches cannot be used to set the time.
When the Function switch is set to any position other than FREQUENCY, depressing the HOUR switch will increment the HOUR digit by one. When the HOUR switch is held ON, the Hours digit increases continuously. The Minutes digit does not change during HOURS set.
Each time the MINUTE switch is depressed, the Minutes digit increases by one. When the switch is held ON, the Minutes digit advances. The Hours digit does not change during Minutes set.
To program the timer, set the timer ON time and place the timer switch ON. Receiver power remains off until the timer preset time is reached, when the relay is activated and the power is switched on.
When the timer OFF time is programmed, the power is turned off at that preset time. When the timer switch is ON, the power switch is inoperative. The timer relay output is available at the Remote control terminals on the rear panel.

4) Microprocessor power supply circuit
When the microprocessor IC12: μPD80C49C is in operation, 5V should be applied to Vcc pin No. 40.
When the microprocessor is in the back-up standby mode, 2V should be applied. When the power switch is turned off, Q35 and Q36 change the level of RESET pin No. 4 to low to protect the RAM, the V_{DD} pin No. 26 becomes low to stop the oscillator and the contents of the RAM are maintained by the low standby voltage (Vcc).
When the power is turned on, 5V is applied to the Vcc pin, the V_{DD} pin becomes high while the RESET pin is held low to activate the oscillator, then the RESET pin returns to a logic high and the program is reset.

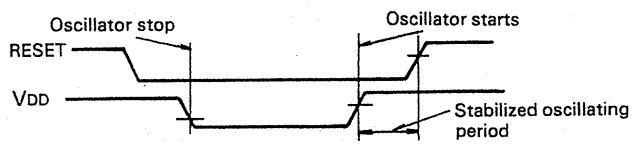

Fig. 2 Micro-processor power supply circuit

CIRCUIT DESCRIPTION

5) Dimmer circuit
The dimmer functions by controlling power to the DC/DC converter. When the main power is on, approximately 12V is supplied to Q41 and Q42 by Q61, Q72, Q73 and D40. When the main power is off or the DIMMER switch is ON, Q73 turns off, and the voltage to Q41 and Q42 is decreased to approximately 8.5V to reduce the display voltage, resulting in a dimmed display.

6) Display circuit
The seven segment and digit signals are output from IC14 to drive the 8-digit display. As the output current is active low, IC15, IC16, Q38, Q39 and Q40 are used.

3. Noise blanker circuit
Pulse noise is obtained through Q11 on the Receiver unit. It is amplified by Q62, Q63 and Q64, rectified by D43 and D44 and DC amplified by Q66 to drive the Receiver unit NB gate circuit. The NB is ON when Q66 is emitter is grounded through D45 varistor.
Q65 is the NB AGC amplifier.

Item	Rating
Nominal center frequency	within 9.420 MHz ± 30 kHz
3 dB bandwidth	within 130 ± 30 kHz
20 dB bandwidth	350 kHz or less
Loss	8 dB or less
Spurious response (within 9.420 ± 2 MHz) (within 8.510 ± 25 KHz)	 30 dB or more 40 dB or more
Input and output impedance	330Ω

Table 7. Ceramic filter (L72-0337-05) PLL unit CF1

Microprocessor Operational Description

1. Digital VFO

1) Reception frequency
The VFO continuously covers 100 kHz - 29,999.95 kHz and stops at the end.
W2 type: 150 kHz - 25.99995 MHz
X type : 2 MHz - 29.99995 MHz

2) Frequency step

	Step	One VFO cycle
FAST	5 kHz	1 MHz
MID	500 Hz	100 kHz
SLOW	50 Hz	10 kHz

The step changeover frequency does not change.
When the VFO is operated with an increased step frequency, frequencies lower than the step frequency are rounded and the VFO scans up or down referring to that frequency.

Example: SLOW step → FAST step

1
3,160.45 MHz
(3,160.4 MHz) → 3,165.00 MHz (3,165.0 MHz) UP
3,155.00 MHz (3,155.0 MHz) DOWN

2
3,163.45 MHz
(3,163.4 MHz) → 3,170 MHz (3,170.0 MHz) UP
3,160.00 MHz (3,160.0 MHz) DOWN

3
3,168.45 MHz
(3,168.4 MHz) → 3,170.00 MHz (3,170.0 MHz) UP
3,160.00 MHz (3,160.0 MHz) DOWN

The above frequencies are displayed frequency; the 10 Hz digits are not displayed.

3) BAND function
The frequency changes by a 1 MHz step when the BAND switch is operated. When the switch is kept depressed, the frequency changes continuously every 0.2 seconds. A beep signal sounds every step. The BAND function stops at the fequency limit and the beep signal does not sound.
When the down operation below the receivable range, the final displayed freuency is the minimum receivable frequency.
Example:

DOWN		UP		
1,034.6 kHz	→	0,100.0 kHz	→	1,100.0 kHz

4) F. LOCK
The VFO and BAND switch operation stop when the F. LOCK switch is set to ON.

5) BACK UP
When the memory is not backed up, the unit enters 15,000.00 kHz MODE (AM) after initial setting.
When the memory is backed up, the unit enters the last reception frequency mode.

2. MODE function

With the mode select operation, the 1st local oscillation frequency is shifted and the displayed frequency is received.

	1st local oscillation frequency shift width
AM	0 (Reference)
FM	0
USB	+1.7 kHz
LSB	−1.7 kHz
CW	+0.7 kHz

3. MEMORY function

1) Memory contes
Built-in 10-channel memory (Frequency and mode information is stored.)

2) M. IN function
When M.CH 1 - 0 switch is pressed with the M.IN switch kept pressed the selected memory channel data is displayed, the beep signal sounds and the displayed frequency and mode are stored. At that time, the previously stored data i replaced with new data.

3) MR function
When M.CH 1 - 0 is pressed, the stored memory contents are recalled to the VFO, enabling frequency shifting.

4) AUTO.M function
When the AUTO.M switch is pressed, the AUTO.M indicator lights and the auto memory function turns on.
When the switch is pressed again, the indicator goes off and the auto memory function turns off.
Auto memory ON: The shifted frequency and mode are stored in the displayed memory channel.
Auto memory OFF: The displayed memory channel contents are not changed even when the frequency is shifted or the mode is changed.

CIRCUIT DESCRIPTION

Example:

frequency change MR

3.235.00 (AM) → 4.182.00 (USB) → 3.235.00 (AM)
(CH5) (CH5)

4. M.SCAN function

1) ALL scan
When the M.S switch is pressed, the M.S indicator lights. When the switch is released, the scanning operation starts. The scanning interval is 1.5 seconds.
M1 → M2 → M3 → ····· → M9 → M0 → M1 → ·····
start
When the M.S switch is pressed again, the M.S indicator goes off, the scanning operation stops and the unit displayes the frequency and mode which were displayed before the scanning operation was started.

2) Select scan
When the desired M.CH switch is pressed with the M.S switch kept pressed, the stored data is recalled. When the switch is released, only the selected memory frequency is scanned.
When the desired M.CH switch is pressed twice in succession, the M.CH display shows "C" and memory frequency scanning is cancelled.

Example:

M.CH CH6 cancelled.

M.S → 2 → 8 → 6 → 6 → 4 → M.S
(Keep pressed.) Released. Then scan starts.

Scan: M2 → M4 → M8 → M2 → M4 → M8 → M2

The scanning release operation is the same as that in all scan and the selected memory channel is cleared.

3) HOLD
When the HOLD switch is pressed during the memory scan operation, the HOLD indicator lights and the scanning operation stops.
In the hold mode, the mode can be changed and memory storage is possible. The memory data does not change without memory input even when the mode is changed.

4) When the FUNCTION switch is set to a position other than FREQUENCY during the memory scanning operation or the POWER switch is set to OFF the scanning operation is released and the unit displayes the reception frequency and mode which were displayed before the scanning operation was started.

5. P.SCAN function

1) Scan
When the P.S switch is pressed, the P.S indicator lights and the data stored in channel 9 is recalled. When the switch is released, the frequencies between channel 9 and channel 0 are scanned.
The reception mode stored in channel 9 is used as a reference and the scanning direction is from channel 9 to 0. When the scanning operation reaches channel 0, it starts from channel 9 again. At that time, a beep signal sounds to indicate that the P.SCAN operation has finished one cycle.
The scan step can be selected with scan step switch and the reception mode can be changed. When the mode is change, the mode does not change until one cycle of P.SCAN operation is finished.
When the P.SCAN operation is finished.
When the P.SCAN switch is pressed again, the P.SCAN indicator goes off, the scanning operation stops and the unit displays the frequency and mode which were displayed before the scanning operation was started.

2) HOLD
When the HOLD switch is pressed during P.SCAN operation, the HOLD indicator lights, the scanning operation stops and the VFO shifts the frequency within the range of the P.SCAN frequency. At the end frequency, the operation stops.
In the HOLD mode, memory storage is possible. When new data is input to channel 9, the stored data can be used as the P.SCAN range.
When the HOLD switch is pressed again, the HOLD indicator goes off and the scanning operation is resumed.

3) BUSY signal stop
When the squelch is opened during the P.SCAN operation, the BUSY indicator lights and the scanning operation stops. When the squelch is closed, the BUSY indicator goes off and the scanning operation starts again. Pressing the BAND UP/DOWN switch when the scanning scanning is stopped due to the squelch function will restart the scanning operation. When the BAND UP/DOWN switch is kept pressed, the scanning operation does not stop even when the squelch opens.
The BUSY signal stop functions in all modes.

4) When the FUNCTION switch is set to a position other than FREQUENCY or the POWER switch is set to OFF, the scanning operation stops and the unit displays the received frequency and mode which were displayed before the scanning operation was started.

5) When a converted is connected and the data stored in both channels 9 and 0 is not an HF or VHF frequency, the M.CH display shows "E" and the P.SCAN does not function. When the M.CH display of the channels 9 and 0 shows "E", P.SCAN does not function.

6. Clock function

1) When the FUNCTION switch is set to CLOCK-1 or CLOCK-2, the unit display the time.
CLOCK-1: Reference time
CLOCK-2: Dual time
When power is supplied, the clock indication blinks.
When CLOCK-1 is reset, the indication stops the blinking.

2) Setting time
Reset CLOCK-1 to stop the blinking. At that time, the seconds digit is set to 0. When the indication is blinking, the time cannot be set. Resetting CLOCK-2 does not stop the indication blinking.

Function	Hour	Minute	Operation
CLOCK-1	ON	ON	Reset to 0:00 (0 sec.).
	ON	OFF	The minutes digits are maintained, the hours digit is incremented and the seconds digits count.
	OFF	ON	The hours digit is maintained, the minutes digits are incremented and the seconds digits count.

CIRCUIT DESCRIPTION

Function	Hour	Minute	Operation
CLOCK-2	ON	ON	Reset to 0:00 and the seconds digits count.
	ON	OFF	The minutes digits are maintained, the hours digit is incremented and the seconds digits count.
	OFF	ON	The hours digit is maintained, the minutes digits are incremented and the seconds digits count.

The clock employs the 24-hour system.
0.00 ···→ 23,59 → 0.00 ···→ 3.15 → 3.16 ···
Each time the HOUR or MINUTE switch is pressed, the corresponding digit is incremented by 1. When the switch is kept pressed, the digit is continuouly incremented at an interval of 0.12 seconds.

3) When the power is shut off, the CLOCK-1 and CLOCK-2 are reset to 0:00. When the power is supplied again, the indication blinks.

7. Timer function

1) TIMER switch
When the TIMER switch is set to ON regardless of the POWER switch setting, the power is turned off and the timer functions. The CLOCK-1 and ON TIME are compared and power is supplied when the set times coincide. Then the CLOCK-2 and OFF time are compared and power is shut off when the set times coincide.
When the ON and OFF times are the same, the power is not turned on.
When CLOCK-1 indication blinks, setting the TIMER switch ON will not operate the timer and the TIMER ERROR indicator will lights.

2) Time setting

Function	Hour	Minute	Operation
ON/OFF	ON	ON	Reset to 0:00.
TIME	ON	OFF	The minutes digits are maintained and the hours digits are incremented.
	OFF	ON	The hours digit is maintained and the minutes digits are incremented.

The HOUR and MINUTE switches function in the same way as for the clock.

3) The CLOCK and ON/OFF TIME are displayed regardless of the POWER switch setting.

8. BACK UP

When the memory back up lithium battery is loaded, the data (frequency and mode) stored in the memory, last reception frequency and mode and ON/OFF TIME are backed up even when the power is shut off.

9. Dimmer function

When the DIMMER switch is set to ON or the POWER switch is set to OFF, the brightness of the digital display and meter decreases, resulting in a dimmer effect.

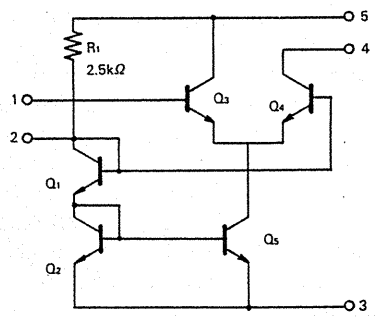

Fig. 3 TA7060P (RX unit Q32)

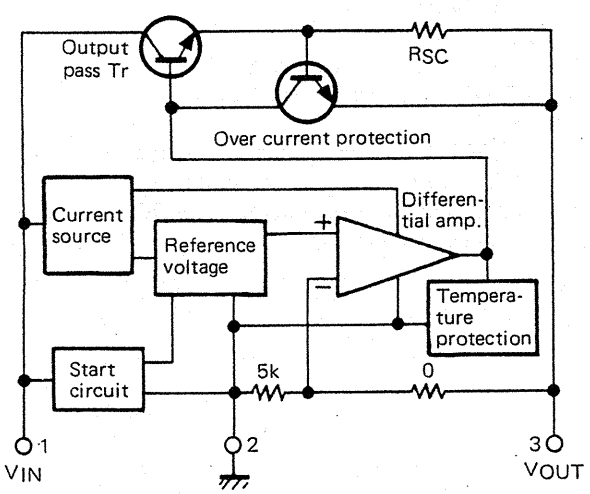

Fig. 4 AN7809 (RX unit Q54, PLL unit IC20)
AN7805 (PLL unit IC18, 19)

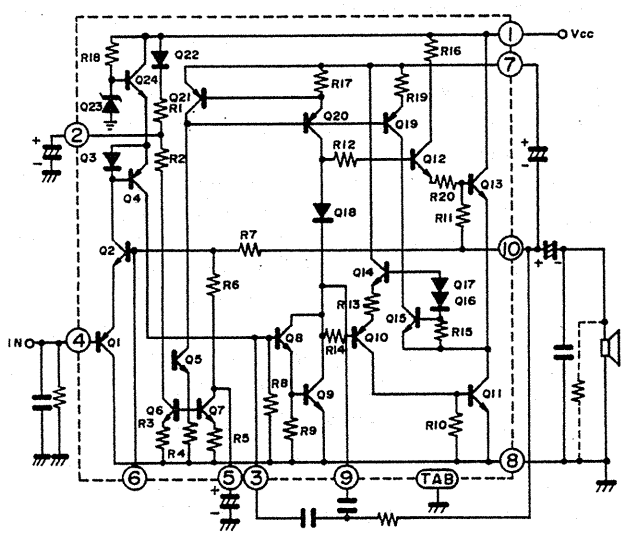

Fig. 5 HA1368R (RX unit Q57)

CIRCUIT DESCRIPTION

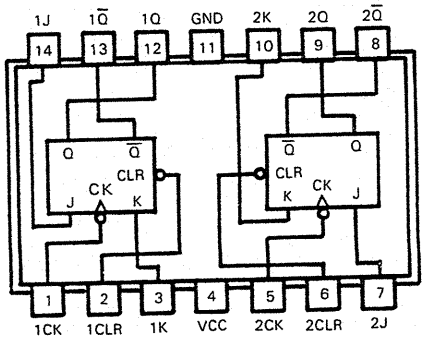

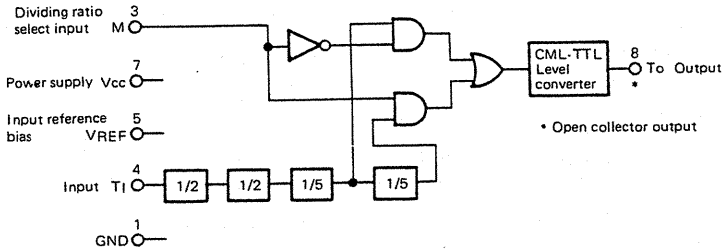

M	"L"	"H"
Dividing data output	1/20	1/100

Fig. 8 M54459L (PLL unit IC3)

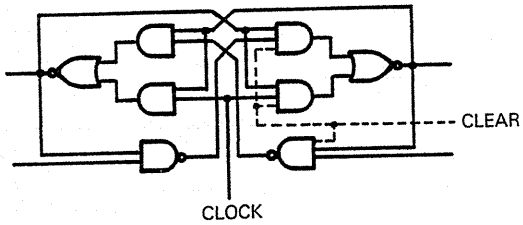

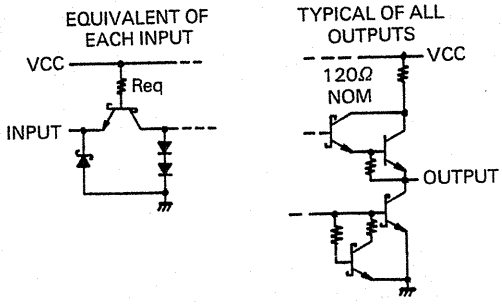

Fig. 6 SN74LS73N (PLL unit IC1)

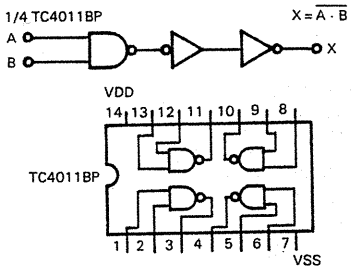

Fig. 9 TC4011BP (PLL unit IC6 ~ 11, 17)

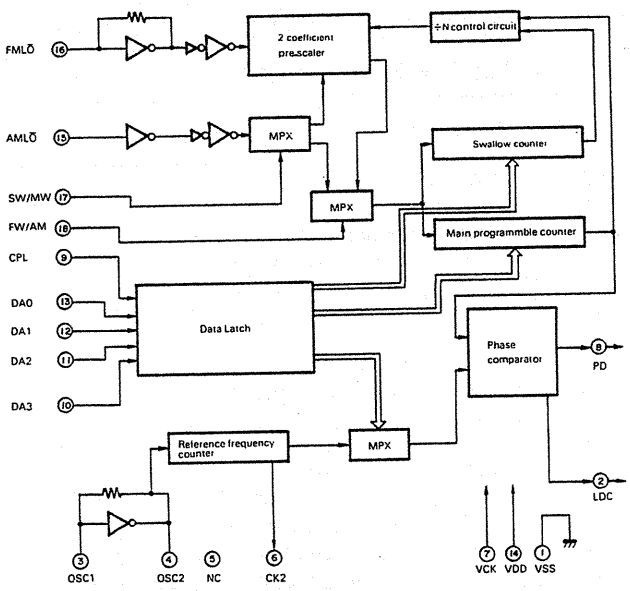

Fig. 7 MN6147C (PLL unit IC2, 5)

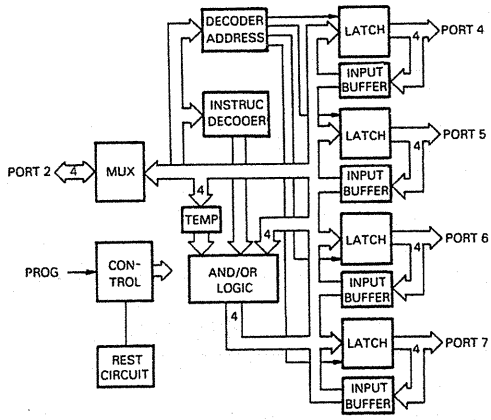

Fig. 10 μPD82C43C (PLL unit IC13, 14)

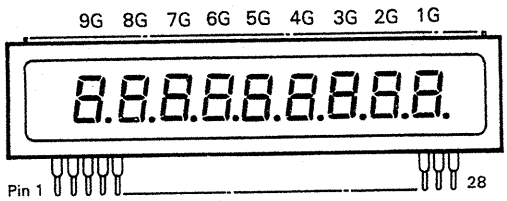

Fig. 11 FIP9D7 (PLL unit)

Table 8. FIP9D7 Terminals

Terminal No.	1	2	3	4	5	6	7	8	9	10	11	12	13	14
Connection	F	NC	9G	NC	NC	8G	P(g)	P(f)	7G	P(e)	P(d)	6G	NC	NC
Terminal No.	15	16	17	18	19	20	21	22	23	24	25	26	27	28
Connection	5G	NP	NP	4G	P(DP)	3G	P(c)	P(b)	2G	P(a)	NC	1G	NP	F

CIRCUIT DESCRIPTION

Item	Symbol	Rating	Unit
Operating voltage	V_{cc}	V_{ss} − 0.3 ~ +10	V
Input voltage	V_i	V_{ss} −0.3 ~ V_{cc} +0.3	V
Output voltage	V_o	V_{ss} −0.3 ~ V_{cc} +0.3	V
Operating temperature	T_{opt}	−40 ~ +85	°C
Storage temperature	T_{stg}	−65 ~ +150	°C

Table 9. μPD80C49C-022 Max. Rating

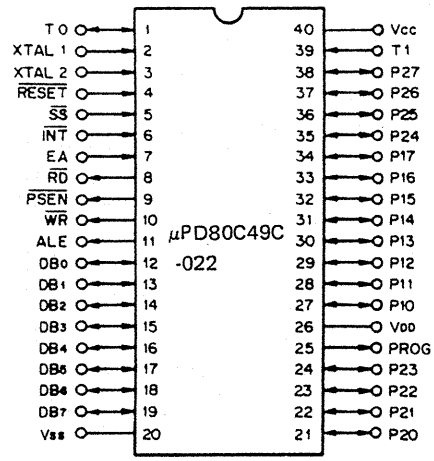

Fig. 12. μPD80C49C-022 Terminal name

μPD80C49C-022 TERMINAL FUNCTIONS

Terminal No.	Name	Function	Input	Output
1	TO	Power ON/OFF DATA input	○	
2	X0	Microcomputer CLOCK (5.74MHz) input	○	
3	X1			
4	RST	RESET input, Normally:H	○	
5	SS	Normally 5V		
6	INT	Clock signal (1KHz) input	○	
7	EA	Normally GND		
8		Not used, Normally:open		
9				
10				
11				
12	B0	AM (Mode output)	○	
13	B1	USB (Mode output)	○	
14	B2	LSB (Mode output)	○	
15	B3	CW (Mode output)	○	
16	B4	FM (Mode output)	○	
17	B5	VCO-L (Output)	○	
18	B6	VCO-M (Output)	○	
19	B7	VCO-H (Output)	○	
20	GND	GND (Output)		

Terminal No.	Name	Function	Input	Output
21	P20	I/O EXPANDER control output		○
22	P21			○
23	P22			○
24	P23			○
25	PRG			○
26	VDD	STBY control input	○	
27	P10	DATA input	○	
28	P11		○	
29	P12		○	
30	P13		○	
31	P14		○	
32	P15		○	
33	P16		○	
34	P17	Program SCAN stop input	○	
35	P24	I/O EXPANDER SELECT (L:EX(O), H:EX(1))		
36	P25	TIMER OUT output		○
37	P26	Encoder UP/DOWN input (H:UP, L:Down)	○	
38	P27	VHF signal output (VHF:H)		○
39	T1	Encoder & program SCAN clock pulse input	○	
40	Vcc	Microcomputer 5V & Back up power supply		

I/O EXPANDER (0) IC13: μPD82C43C

Terminal No.	Name	Function
2	P40	B.P.F. Data (BCD)
3	P41	
4	P42	
5	P43	
1	P50	PLL dividing ratio data, address output & DATA SELECTOR output
23	P51	
22	P52	
21	P53	
20	P60	PLL IC5 (Latch clock output)
19	P61	PLL IC2 (Latch clock output)
18	P62	Beep output
17	P63	TIMER error (LED output)
13	P70	M. SCAN (LED output)
14	P71	PG. SCAN (LED output)
15	P72	HOLD (LED output)
16	P73	AUTO. M (LED output)

I/O EXPANDER (1) IC14: μPD82C43C

Terminal No.	Name	Function	
2	P40	Display DIGIT output 100HZ	Active "L"
3	P41	Display DIGIT output 1K	
4	P42	Display DIGIT output 10K	
5	P43	Display DIGIT output 100K	
1	P50	Display DIGIT output 1M	
23	P51	Display DIGIT output 10M	
22	P52	Display DIGIT output 100M	
21	P53	Display DIGIT output CH	
20	P60	Display SEGMENT output a	Active "L"
19	P61	Display SEGMENT output b	
18	P62	Display SEGMENT output c	
17	P63	Display SEGMENT output d	
13	P70	Display SEGMENT output e	
14	P71	Display SEGMENT output f	
15	P72	Display SEGMENT output g	
16	P73	Display SEGMENT output point	

PARTS LIST

CAPACITORS

CC 45 TH 1H 220 J
1 2 3 4 5 6

1 = Type ..... ceramic, electrolytic, etc.
2 = Shape ..... round, square, etc.
3 = Temp coefficient
4 = Voltage rating
5 = Value
6 = Tolerance

● **Temperature coefficient**

1st Word	C	L	P	R	S	T	U
Color※	Black	Red	Orange	Yellow	Green	Blue	Violet
ppm ℃	0	−80	−150	−220	−330	−470	−750

2nd Word	G	H	J	K	L
ppm ℃	±30	±60	±120	±250	±500

Example CC45TH = −470 ± 60ppm ℃

CC45

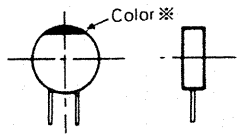

● **Rating voltage**

2nd word / 1st word	A	B	C	D	E	F	G	H	J	K	V
0	1.0	1.25	1.6	2.0	2.5	3.15	4.0	5.0	6.3	8.0	—
1	10	12.5	16	20	25	31.5	40	50	63	80	35
2	100	125	160	200	250	315	400	500	630	800	—
3	1000	1250	1600	2000	2500	3150	4000	5000	6300	8000	—

● **Capacitor value**

0 1 0 = 1pF
1 0 0 = 10pF
1 0 1 = 100pF
1 0 2 = 1000pF = 0.001μF
1 0 3 = 0.01μF

2 2 0 = 22pF
1st number / 2nd number — Multiplier

● **Tolerance**

Cord	C	D	G	J	K	M	X	Z	P	No cord
(%)	±0.25	±0.5	±2	±5	±10	±20	+40 −20	+80 −20	+100 −0	More than 10μF −10 ~ +50 Less than 4.7μF −10 ~ +75

Less than 10 pF

Cord	B	C	D	F	G
(pF)	±0.1	±0.25	±0.5	±1	±2

Abbreviation		Abbreviation	
Cap	Capacitor	ML	Mylar
C	Ceramic	S	Styren
E	Electrolytic	T	Tantalum
MC	Mica		

Resistors not listed in this parts list are standard, fixed carbon composition, 1/4W or 1/8W.
The resistance values, in ohms, are indicated on the schematic diagram.

SEMI CONDUCTOR

N: New Parts

Item	Name	Remarks
Diode	1N60	
	1N4448	
	1S1007	
	1S1555	
	1S1587	
	1S2588	
	BA282	
	D33A	
	RD4.7EB3	
	V03C	
Zener-Diode	WZ-061	
	WZ-071	
	WZ-110	
	XZ-060	
LED	ON1110	
	LM358P	
	SG238D	
	SR538D	
	SY438D	
	TLG205	
	TLR205	

Item	Name	Remarks
	TLY205	
TR	2SA1015(Y)	
	2SC1675(L)	
	2SC1775(E)	
	2SC1815(Y)	
	2SC1907	
	2SC1923(D)	
	2SC1959(Y)	
	2SC2240(GR)	
	2SC2878	N
	2SD235(Y)	
FET	2SK192A(GR)	
	3SK73(GR)	
	3SK74(L)	
IC	AN7805	N
	AN7809	N
	HA1368R	
	M54459L	
	MN6147C	
	NJM4558D	

Item	Name	Remarks
	SN16913P	
	SN74LS145N	
	SN74LS73N	
	TA7060AP	
	TA7324P	
	TC4011BP	
	TC5065BP	
	TC5067BP	
	μPC577H	
	μPD80C49C-022	N
	μPD82C43C	N
Varistor	MV-13	
Vari-cap	1SV53A	
	1SV54GC	
Display tube	FIP9D7	
Surge-Absorber	ERZD03DK331	

PARTS LIST

Part No.	Re-marks	Description	
GENERAL			
A01-0939-02	N	Case (upper)	
A01-0940-02	N	Case (lower)	
A20-2465-03	N	Panel	
A23-1472-02	N	Rear panel	
B03-0529-04	N	Carring handle back plate	
B03-0530-14	N	Switch name plate, NAR-WIDE	
B03-0531-04	N	Ornamental plate, Meter	
B30-0817-15		Lamp, 14V 80mA	
B31-0641-05	N	Meter	
B39-0407-04		Spacer x2	
B42-1722-24		FTZ plate	W_2
B43-0686-04	N	Badge	K,M,W,W_2,X
B43-0687-04	N	Badge	T
B46-0058-10		Warranty card (TKC)	K
B50-4022-00	N	Instruction manual	K,M,W,W_2,X
B50-4023-00	N	Instruction manual	T
B58-0637-00		Voltage warning paper	K,M,W,W_2,X
B58-0638-00		Warning paper	T
B58-0653-00	N	Warning paper	W_2
B58-0654-00	N	Warning paper	X
C91-0079-05		C, 0.01 AC125V	C1
E04-0152-05		UHF type receptacle, ANT	
E07-0751-05		7P DIN plug, accessory	
E12-0001-15		Phone plug, accessory	
E18-0351-05		3P Inlet, AC power	
E30-1643-15		AC Cable ass'y	K,M
E30-1644-15		AC Cable ass'y	T
E30-1645-05		AC Cable ass'y	W,W_2
E30-1647-05		AC Cable ass'y	X
F05-1013-05		Fuse x 2, 0.1A, accessory	
F05-1521-05		Fuse 1.5A, accessory	
F15-0646-04	N	Switch mask, Piano switch	
F19-0610-04		Connector mask, DC13.8V	
F19-0622-04	N	Rear cover	
G13-0669-04		Cushion, MODE	
G16-0506-04		Anti vibration sheet, Case	
G53-0510-04		Packing x 2, Case	
H01-4463-04	N	Packing carton	K,M,W,W_2,X
H01-4464-04	N	packing carton	T
H03-2098-04	N	Packing carton	
H10-2569-02	N	Packing fixture (R)	
H10-2570-02	N	Packing fixture (L)	
H12-1320-04	N	Cushion	
H20-1419-03	N	Protective cover	
H25-0029-04		Protective bag 60x100	
H25-0105-04		Protective bag 150x350	
J02-0323-05		Foot x 4, Case (lower)	
J02-0403-04		Rubber foot x 4, Case	
J02-0428-05	N	Assistant foot, Case (lower)	
J19-1369-04	N	Knob metal fittings, Piano switch	
J19-1372-14	N	Knob metal fittings, Piano switch	
J21-2573-04		Foot metal fittings x 2, Case	
J21-2788-04	N	Speaker metal fittings x 3	
J32-0767-04	N	Hex. boss x 4, Meter	

Part No.	Re-marks	Description	
J61-0019-05		Band x 3	
J61-0401-05		Nylon band x 20	
K01-0411-05	N	Carring handle	
K21-0769-04	N	Main knob	
K23-0738-04		Knob, FUNCTION	
K23-0755-04	N	Knob x 4, AF, TONE, SQL, ATT	
K27-0426-14		Band knob x 2	
K29-0758-04		Push knob x 2, POWER, TIMER	
K29-0767-04		Push knob x 2, DIM, NB	
K29-0768-04		Push knob, AGC	
K29-0771-04		Knob ring	
K29-0772-03	N	Knob ass'y	
K29-0773-04	N	Push knob, MODE	
K29-0774-04	N	Push knob, NAR-WIDE	
K29-0775-04	N	Push knob, F. LOCK	
K29-0776-04	N	Push knob x 3, TUNING SPEED	
L01-8064-05	N	Power transformer	
N09-0256-05		Ground screw, ANT	
N09-0641-05		Screw x 7, Panel	
N14-0508-04		Spanner nut, Panel	
N15-1040-46		Washer x 2, Carring handle	
N30-2608-41		Screw x 2, DC	
N30-3006-41		Screw x 7, Lamp, PLL, DIN	
N30-3008-41		Screw x 2, AC	
N30-3012-46		Screw, Panel	
N30-4006-46		Screw x 2, Carring handle	
N32-2606-46		Flat screw x 4, Meter	
N35-3006-41		Bind screw x 16, Case	
N87-2606-46		Bind tapping screw x16	
N87-2608-46		Self tapping screw x5	
		Knob ass'y x 5	
N87-3006-41		Self tapping screw x 25	
		Push switch, etc	
N87-3008-41		Self tapping screw x 2, ANT, SP	
N87-3010-46		Self tapping screw x 3, SP	
N87-3012-46		Tap tight screw x 24, PC boad	
N88-3006-46		Tap tight screw x 10, Sub panel, etc.	
S90-0405-05	N	Rotary remote switch, ATT	
T07-0225-15	N	Speaker	
X41-1480-00	N	Switch unit	K,M,T,W
X41-1480-61	N	Switch unit	W_2
X41-1480-71	N	Switch unit	X
X50-1920-00	N	PLL unit	
X54-1690-00		Encoder unit	
X55-1340-00	N	RX unit	

PARTS LIST

Part No.	Re-marks	Description	Ref. No.	Q'ty
SWITCH UNIT (X41-1480-○○)		**–00: K, M, T, W –61: W2, –71: X**		
CE04W1C100M		E, 10 16V	C8	1
CE04W1H4R7M		E, 4.7 50V	C2,4	2
CQ92M1H102K		ML, 0.001	C5	1
CQ92M1H104K		ML, 0.1	C1,13	2
CQ92M1H683K		ML, 0.068	C3	1
CK45F1H103Z		C, 0.01	C6,7,9,12	4
CK45F1H473Z		C, 0.047	C21,23,24	3
C90-0814-05		C, 4700 25V	C22	1
E11-0413-05		US jack, phones		1
E11-0414-05	N	US jack, REC		1
E23-0512-05		Terminal		2
E40-0273-05		Mini connector 2P		2
E40-0442-05		Power connector (4P)		1
F05-1521-05		Fuse, 1.5A		1
J13-0401-05		Fuse holder		2
J30-0514-14		LED spacer		6
R01-3421-05		Pot. 10KΩ(A), AF, tone	VR1,2	2
R06-9406-05	N	Pot. 50KΩ(B), 10KΩ(B) SQL	VR3,	1
RS14AB3A220J		Metal film 22Ω ±5% 1W	R12	1
RS14AB3A470J		Metal film 47Ω ±5% 1W	R11	1
R92-0150-05		Jumper wire		25
S29-1429-05	N	Rotary switch, FUNCTION	S30	1
S29-1430-05	N	Voltage select switch	S40	1
S40-2440-15		Push switch, NB, DIM, AGC	S27~29	3
S40-2442-05	N	Push switch, NAR-WIDE	S24	1
S42-2406-05	N	Push switch, power, timer	S31	1
S42-4402-05	N	Push switch, tuning speed	S23	1
S50-1409-05		Tact switch, BAND	S25,26	2
S50-1411-05		Tact switch, MODE	S16~20	5
S50-1412-05	N	Tact switch	S1~15,21,22	17
PLL UNIT (X50-1920-00)				
C05-0013-15		Ceramic trimmer 30pF	C1	1
CC45CH1H010C		C, 1P ±0.25P	C75,	1
CC45CH1H030C		C, 3P ±0.25P	C88	1
CC45CH1H050C		C, 5P ±0.25P	C15,22,37,38, 57,58,87,154	8
CC45CH1H0R5C		C, 0.5P ±0.25P	C31,134,136	3
CC45CH1H100D		C, 10P ±0.5P	C23,33,53, 117,121,122, 126,127,151	9
CC45CH1H120J		C, 12P	C116	1

Part No.	Re-marks	Description	Ref. No.	Q'ty
CC45CH1H150J		C, 15P	C52,76,150	3
CC45CH1H220J		C, 22P	C14,155	2
CC45RH1H010C		C, 1P ±0.25P	C135	1
CC45RH1H020C		C, 2P ±0.25P	C133,142	2
CC45RH1H040C		C, 4P ±0.25P	C138	1
CC45RH1H060D		C, 6P ±0.5P	C140,143,146	3
CC45RH1H070D		C, 7P ± 0.5P	C51	1
CC45RH1H100D		C, 10P ±0.5P	C115,120,125	3
CC45RH1H220J		C, 22P	C144,	1
CC45RH1H330J		C, 33P	C141	1
CC45RH1H470J		C, 47P	C49, 118	2
CC45RH1H560J		C, 56P	C113	1
CC45SL1H101J		C, 100P	C13,16,26	3
CC45SL1H121J		C, 120P	C147	1
CC45SL1H180J		C, 18P	C181,182	2
CC45SL1H181J		C, 180P	C68	1
CC45SL1H330J		C, 33P	C11	1
CC45SL1H560J		C, 56P	C65,67,112	3
CE04W1A101M		E, 100 10V	C175,	1
CE04W1A470M		E, 47 10V	C177,185	2
CE04W1C101M		E, 100 16V	C222	1
CE04W1C220M		E, 22 16V	C18,47,55,97, 100	5
CE04W1C221M		E, 220 16V	C186	1
CE04W1E100M		E, 10 25V	C187,189	2
CE04W1E470M		E, 47 25V	C213,217	2
CE04W1H0R1M		E, 0.1 50V	C180,	1
CE04W1H010M		E, 1 50V	C178,231	2
CE04W1H100M		E, 10 50V	C190,191	2
CE04W1HR47M		E, 0.47 50V	C227,230	2
CE04W1H4R7M		E, 4.7 50V	C201	1
CK45B1H102K		C, 0.001	C40,60,64,66,70,79,80,82, 90,148,153,157,~159,166, 172,198,202,234,236	23
CK45B1H221K		C, 220P	C12	1
CK45F1H103Z		C, 0.01	C25,36,54,63,98,99,111, 131,132,137,149,152, 156,160,188,203,211, 235	18
CK45F1H223Z		C, 0.022	C24,28,29,39,56,59,74,83, 84,85,89,129,193~197, 204~210,237	27
CK45F1H473Z		C, 0.047	C21,35,41,42,61,62,69,77, 91,167,170,176,179,184 199,212,216,224,225,228 232, 238	22
CQ92M1H103K		ML, 0.01	C92,93	2
CQ92M1H104K		ML, 0.1	C45,95,214, 215,218~ 221	8
CQ92M1H123K		ML, 0.012	C43,44,94,	3
CQ92M1H333K		ML, 0.033	C173,174	2
CQ92M1H472K		ML, 0.0047	C48,128	2
C90-0817-05		C, 1000 16V	C130	1
C91-0456-05		E, 0.047 25V	C19,46,71~73,96,162,168, 169,171,183,192,200, 223,226,229	16
E04-0154-05		Coax connector		4
E06-0752-05	N	DIN connector, 7P, REMOTE		1

PARTS LIST

Part No.	Re-marks	Description	Ref. No.	Q'ty
E06-1051-05	N	DIN connector, 10P		1
		V. CONVERTER		
E11-0408-05		MIC jack, EXT SP		1
E23-0046-04		Square terminal		2
E40-0273-05		Mini connector, 2P		12
E40-0373-05		Mini connector, 3P		3
E40-0473-05		Mini connector, 4P		4
E40-0573-05		Mini connector, 5P		3
E40-0673-05		Mini connector, 6P		1
E40-0773-05		Mini connector, 7P		1
J21-2792-04		Connector metal fittings (B)		1
J31-0502-04		PC Board collar		9
J42-0428-05		PC Board bush		9
L19-0323-05		OSC transformer DC-DC	T9	1
L32-0651-05		OSC coil VCO-L	T6	1
L32-0652-05		OSC coil VCO-M	T7	1
L32-0653-05		OSC coil VCO-H	T8	1
L34-0540-05		Tuning coil 455KHz	T10	1
L34-0863-05		Tuning coil 455KHz	T11	1
L34-2058-05		Tuning coil VCO	T3	1
L34-2147-05	N	Tuning coil 9.42MHz	T4	1
L34-2148-05	N	Tuning coil 9.42MHz	T5	1
L34-2149-05	N	Tuning coil 36MHz	T1,2	2
L40-1001-03		Ferri-inductor 10μH	L22,39	2
L40-1001-14		Ferri-inductor 10μH	L67,68	2
L40-1011-03		Ferri-inductor 100μH	L6,11,19,40~44 46,~50,57,65	15
L40-1011-13		Ferri-inductor 100μH	L58,66	2
L40-1011-14		Ferri-inductor 100μH	L51~56	6
L40-1021-03		Ferri-inductor1mH	L7~9,12,20, 23,27,59,60	9
L40-1092-14		Ferri-inductor 1μH	L32	1
L40-1292-14		Ferri-inductor 1.2μH	L29,31,34	3
L40-1501-03		Ferri-inductor 15μH	L26	1
L40-1511-03		Ferri-inductor 150μH	L13,15,45	3
L40-1541-27		Ferri-inductor 150μH	L21,	1
L40-1801-03		Ferri-inductor 18μH	L25,	1
L40-1892-14		Ferri-inductOr 1.8μH	L30,	1
L40-2201-03		Ferri-inductor 22μH	L24,37,38,	3
L40-2211-03		Ferri-inductor 220μH	L16	1
L40-2225-04		Ferri-inductor 2.2mH	L14,	1
L40-2282-14		Ferri-inductor 0.22μH	L33,36	2
L40-3982-14		Ferri-inductor 0.39μH	L35,	1
L40-4701-03		Ferri-inductor 47μH	L10,28	2
L40-4711-03		Ferri-inductor 470μH	L1~5,17,18	7
L72-0337-05	N	Ceramic filter 9.42MHz	CF1	1
L77-0984-05	N	Crystal 9MHz	X1	1
L78-0005-05		Ceramic oscillator 5.745MHz	X2	1
N09-0641-05		Screw		2
N10-2030-46		Screw		2
N30-2606-46		Screw		6
N30-3006-46		Screw		1
N30-3008-46		Screw		2
R12-6401-05		Trim. pot 470K (B)	VR1	1
RS14AB3D101J		Metal film 100Ω ±5% 2W	R217	1
RS14AB3D150J		Metal film 15Ω ±5% 2W	R218,	1
R90-0162-05		Inline block 47kΩ×8	IB2~4	3
R92-0563-05		Inline block 150kΩ×5	IB5,6	2
R92-0150-05		Short jumper		191

Part No.	Re-marks	Description	Ref. No.	Q'ty
S51-2408-05		Relay	RL1	1
W09-0323-05		Lithium battery		1
ENCODER UNIT (X54-1690-00)				
CE04W0J101M		E, 100 6.3V	C1	1
D09-0305-04		Encoder slit		1
D21-0824-05		Shaft ass'y		1
N30-2606-46		Screw		2
R12-2409-05		Trim. pot 5kΩ (B)	VR1,2	2
RX UNIT (X55-1340-00)				
CC45CG1H221J		C, 220P	C165	1
CC45CH1H020C		C, 2P ±0.25P	C110	1
CC45CH1H050C		C, 5P ±0.25P	C93	1
CC45CH1H0R5C		C, 0.5P ±0.25P	C95	1
CC45CH1H070D		C, 7P ±0.5P	C96	1
CC45CH1H150J		C, 15P	C111	1
CC45CH1H151J		C, 150P	C175	1
CC45CH1H220J		C, 22P	C188	
CC45CH1H270J		C, 27P	C164	1
CC45CH1H330J		C, 33P	C169	1
CC45RH1H020C		C, 2P ±0.25P	C80	1
CC45RH1H070D		C, 7P ±0.5P	C90	1
CC45SL1H101J		C, 100P	C141,144	2
CC45SL1H120J		C, 12P	C234,235	2
CC45SL1H151J		C, 150P	C29,31,36,37, 67	5
CC45SL1H220J		C, 22P	C205,207	2
CC45SL1H241J		C, 240P	C27~29	3
CC45SL1H270J		C, 27P	C109	1
CC45SL1H301J		C, 300P	C30	1
CC45SL1H331J		C, 330P	C19,21	2
CC45SL1H511J		C, 510P	C16~18	3
CC45SL1H680J		C, 68P	C38	1
CC45SL1H820J		C, 82P	C40,170,243	3
CE04W1A101M		E, 100 10V	C233,247	2
CE04W1A470M		E, 47 10V	C156,158,160,226,231, 237,251,252	8
CE04W1C100M		E, 10 16V	C11,15,22,26,32,35,41,44, 51,54,60,63,64,71,76,78, 83,112,117~119,123~130, 147,148,150,176,181 210,212,214,228,240	39
CE04W1C101M		E, 100 16V	C217,	1
CE04W1C102M		E, 1000 16V	C238	1
CE04W1C221M		E, 220 16V	C218,	1
CE04W1H0R1M		E, 0.1 50V	C149,	1
CE04W1H010M		E, 1 50V	C3,69 155,157,159, 172,197,255	8
CE04W1HR22M		E, 0.22 50V	C182,183, 215	3

PARTS LIST

Part No.	Re-marks	Description	Ref. No.	Q'ty
CE04W1H2R2M		E, 2.2 50V	C152,178,179	3
CE04W1H3R3M		E, 3.3 50V	C209	1
CE04W1HR47M		E, 0.47 50V	C146,151,153, 180	4
CE04W1H4R7M		E, 4.7 50V	C211,	1
CK45B1H102K		C, 0.001	C87,94,100 107,196,245	6
CK45B1H681K		C, 680P	C8,10,20	3
CK45F1H103Z		C, 0.01	C73,92,98,113,115,116, 121,122,131,136,163, 171,186,221,232,241	16
CQ92M1H102K		ML, 0.001	C5~7,168, 200,254	6
CQ92M1H103K		ML, 0.01	C206,222~ 225	5
CQ92M1H104K		ML, 0.1	C219,220, 239,253	4
CQ92M1H122K		ML, 0.0012	C9,48,50	3
CQ92M1H183K		ML, 0.018	C201,	1
CQ92M1H222K		ML, 0.0022	C47,202,204, 208	4
CQ92M1H272K		ML, 0.0027	C49,57,59,	3
CQ92M1H333K		ML, 0.033	C55,56,167, 173,174	5
CQ92M1H392K		ML, 0.0039	C45,46,230	3
CQ92M1H393K		ML, 0.039	C203	1
CQ92M1H473K		ML, 0.047	C199,213,229	3
CQ92M1H562K		ML, 0.0056	C58	1
CQ09FS1H561G		ML, 560P ±2%	C166	1
C90-0817-05		E, 1000 16V	C236	1
C91-0131-05		C, 0.01 25V	C4,65,70,81,84,97,99,101, 102,143,145,154,189, 216,227	15
C91-0456-05		C, 0.047 25V	C82,248,249,12~14,23~ 25,33,34,42,43,52,53,61, 62,72,74,75,77,79,85,86, 91,103,~106,108,114, 120,132,~135,137~ 140,142,177,184,185,187, 190~195,198,66,88,89, 244,246	1
C91-0490-05		Cap, 1000P 50V	C242	1
E04-0154-05		Coax connector		1
E04-0157-05		Mini pin jack A		3
E21-0461-05	N	4P pusch terminal		1
E23-0512-05		Terminal		2
E29-0434-05		1P connector		1
E40-0273-05		Mini connector 2P		14
E40-0373-05		Mini connector 3P		1
E40-0473-05		Mini connector 4P		2
E40-0573-05		Mini connector 5P		3
J13-0039-05		Fuse holder		2
J31-0502-04		PC Board collar		12
J42-0428-05		PC Board bush		12
L19-0324-05		Wide band width transformer	T1,2,4	3
L30-0503-05		IFT 455KHz	T21	1
L30-0504-05		IFT 455KHz	T20	1
L32-0646-05		OSC coil 455KHz, BFO	T19	1
L34-0540-05		Tuning coil 455KHz	T17	1

Part No.	Re-marks	Description	Ref. No.	Q'ty
L34-0858-05		Tuning coil 46MHz	T5	1
L34-0864-05		Tuning coil 455KHz	T14	1
L34-0865-15		Tuning coil 455KHz	T15	1
L34-0866-15		Tuning coil 455KHz	T16	1
L34-0868-05		Tuning coil 455KHz	T18	1
L34-2068-05		Tuning coil 46MHz	T6,7	2
L34-2109-15		Tuning coil 46MHz	T3	1
L34-2148-05		Tuning coil 9.42MHz	T13	1
L34-2149-05		Tuning coil 36MHz	T9	1
L34-2150-05	N	Tuning coil 46 MHz	T8	1
L34-2151-05	N	Tuning coil 9.9MHz	T10	1
L34-2152-05	N	Tuning coil 9.9MHz	T12	1
L34-2153-05	N	Tuning coil 9.9MHz	T11	1
L40-1001-02		Ferri-inductor 10μH	L24,26	2
L40-1011-03		Ferri-inductor 100μH	L41,42,44,45,	4
L40-1021-03		Ferri-inductor 1mH	L39,40,46~ 48,51,52	7
L40-1205-25		Ferri-inductor 12μH	L31,32	2
L40-1092-02		Ferri-inductor 1μH	L54	1
L40-1292-02		Ferri-inductor 1.2μH	L9,10,14,16	4
L40-1892-02		Ferri-inductor 1.8μH	L12,13,	2
L40-2282-14		Ferri-inductor 0.22μH	L20	1
L40-2791-02		Ferri-inductor 2.7μH	L3,4,8,11	4
L40-3382-14		Ferri-inductor 0.33μH	L36,	1
L40-3392-02		Ferri-inductor 3.3μH	L6,7	2
L40-3982-14		Ferri-inductor 0.39μH	L22,23	2
L40-3991-02		Ferri-inductor 3.9μH	L38	1
L40-4701-03		Ferri-inductor 47μH	L43,50	2
L40-4711-03		Ferri-inductor 470μH	L33~35,37	4
L40-4782-02		Ferri-inductor 0.47μH	L19,21	2
L40-4791-02		Ferri-inductor 4.7μH	L2,5,25,	3
L40-4791-14		Ferri-inductor 4.7μH	L53	1
L40-6825-04		Ferri-inductor 6.8mH	L49	1
L40-6882-02		Ferri-inductor 0.68μH	L15,17,18,	3
L40-6891-02		Ferri-inductor 6.8μH	L27,28	2
L40-8209-25		Ferri-inductor 82μH	L29,30	2
L72-0316-05		Ceramic filter CFW 455E	F5	1
L72-0319-05		Ceramic filter CFW 455HT	F4	1
L72-0332-05		Ceramic filter CFW455K1	F3	1
L72-0338-05	N	Ceramic filter SFE9.8MK	F1	1
L79-0446-05		Ceramic discriminator CFY455S	F6	1
N09-0641-05		Round screw		2
N10-2030-46		Screw		3
N30-3008-46		Screw		1
N30-3010-46		Screw		2
R12-1038-05		Trim. pot 1KΩ(B)	VR3,	1
R12-1040-05		Trim. pot 4.7KΩ(B)	VR5,	1
R12-1414-05		Trim. pot 1KΩ(B)	VR1,	1
R12-2409-05		Trim. pot 5KΩ(B)	VR4,	1
R12-3045-05		Trim. pot 10KΩ(B)	VR7,8,	2
R12-3046-05		Trim. pot 47KΩ(B)	VR6	1
R12-5030-05		Trim. pot 100KΩ(B)	VR10	1
R12-6401-05		Trim. pot 470KΩ(B)	VR9	1
R90-0522-05		Resistor block 47KΩ×6	RA-1	1
R92-0150-05		Short jumper		70
S90-0406-05	N	Slide switch, ATT	S1	1

PC BOARD VIEW

16 RX UNIT (X55 - 1340 - 00) Component Side view

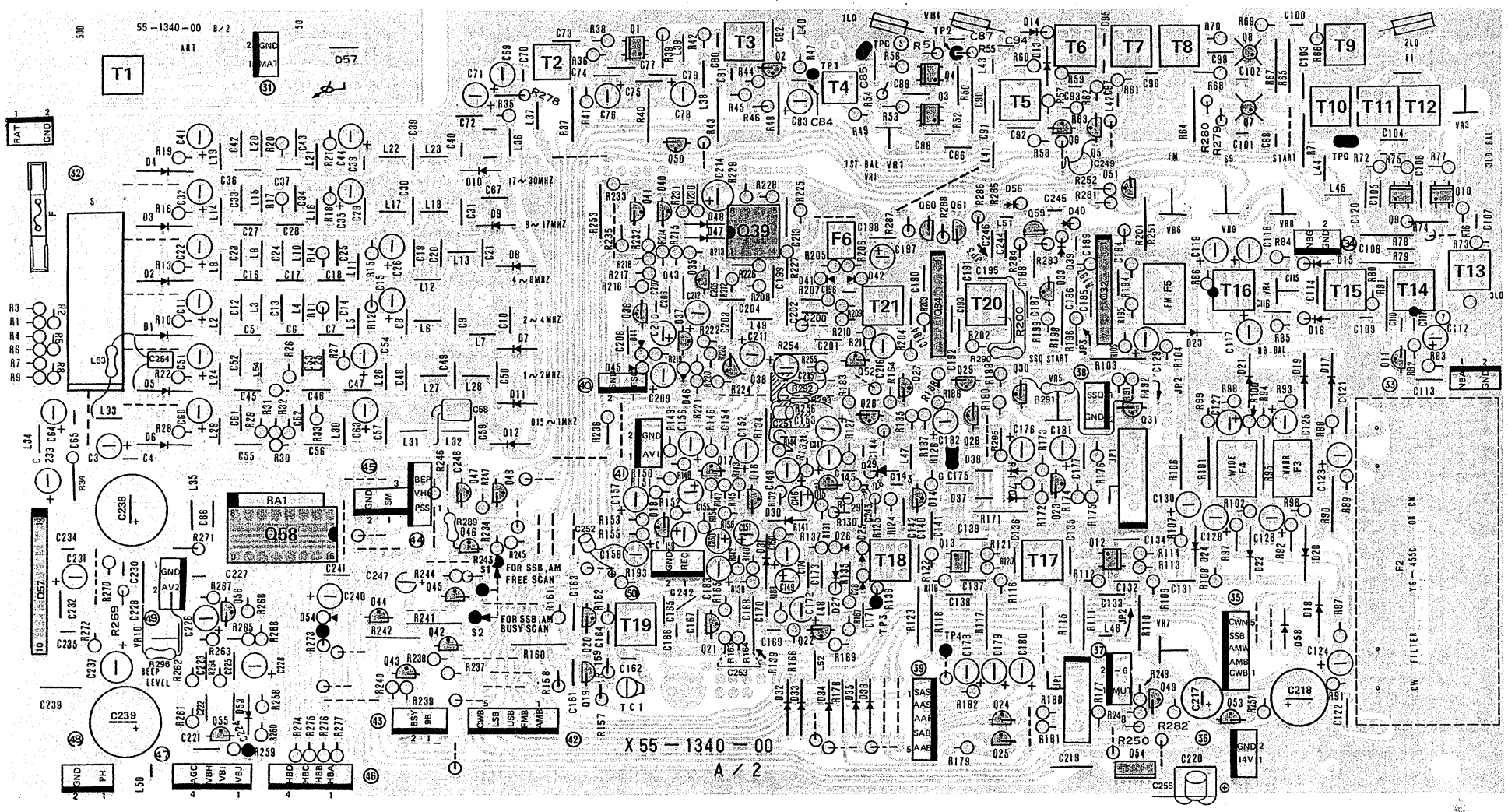

2SA1015 (Y)
2SC1675 (L)
2SC1775 (E)
2SC1815 (Y)
2SC1959 (Y)
2SC2240 (GR)
2SC2878

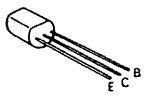

2SK192A

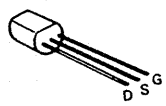

3SK73 (GR)

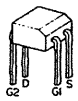

3SK74 (L)

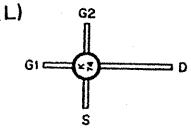

μPC577H

HA1368R

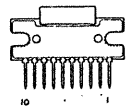

SCHEMATIC DIAGRAM RX UNIT (X55-1340-00)

R-2000

Measurement conditions.
Freq.: 14.525 MHz, USB, RX no signal

Notes
1. (1.5/2.0) F: (Squelch open/close) FM Mode
2. XXmVrms: Level

: Signal line
: Control line
: Common DC line
: Test point
: Adjusting point

Q1,3,4,9,10,12,13	: 3SK73(GR)	Q30,48,51,61	: 2SA1015(Y)	Q54	: AN7809	D1~14	: BA282
Q2,5,6,11,14,20~28,31,37,38, 40~47,49,56,59,60	: 2SC1815(Y)	Q32	: TA7060P	Q55	: 2SC2878	D15~20,24	: 1S1587
Q7,8	: 3SK74(L)	Q33	: 2SC1675(L)	Q57	: HA1368R	D21~23	: 1S1007
Q15~18,52	: 2SC2240(GR)	Q34	: μPC577H	Q58	: SN74LS145N	D25~29,37,38,41, 42,44,45	: 1N60
Q29,50	: 2SK192(GR)	Q35,36	: 2SC1775(E)			D30~36,46~48,51~53, 60,61	: 1S1555
		Q39	: NJM4558D				
		Q53	: 2SC1959(Y)				

D43	: D33A
D54	: RD47EB3
D57	: ERZD03DK331

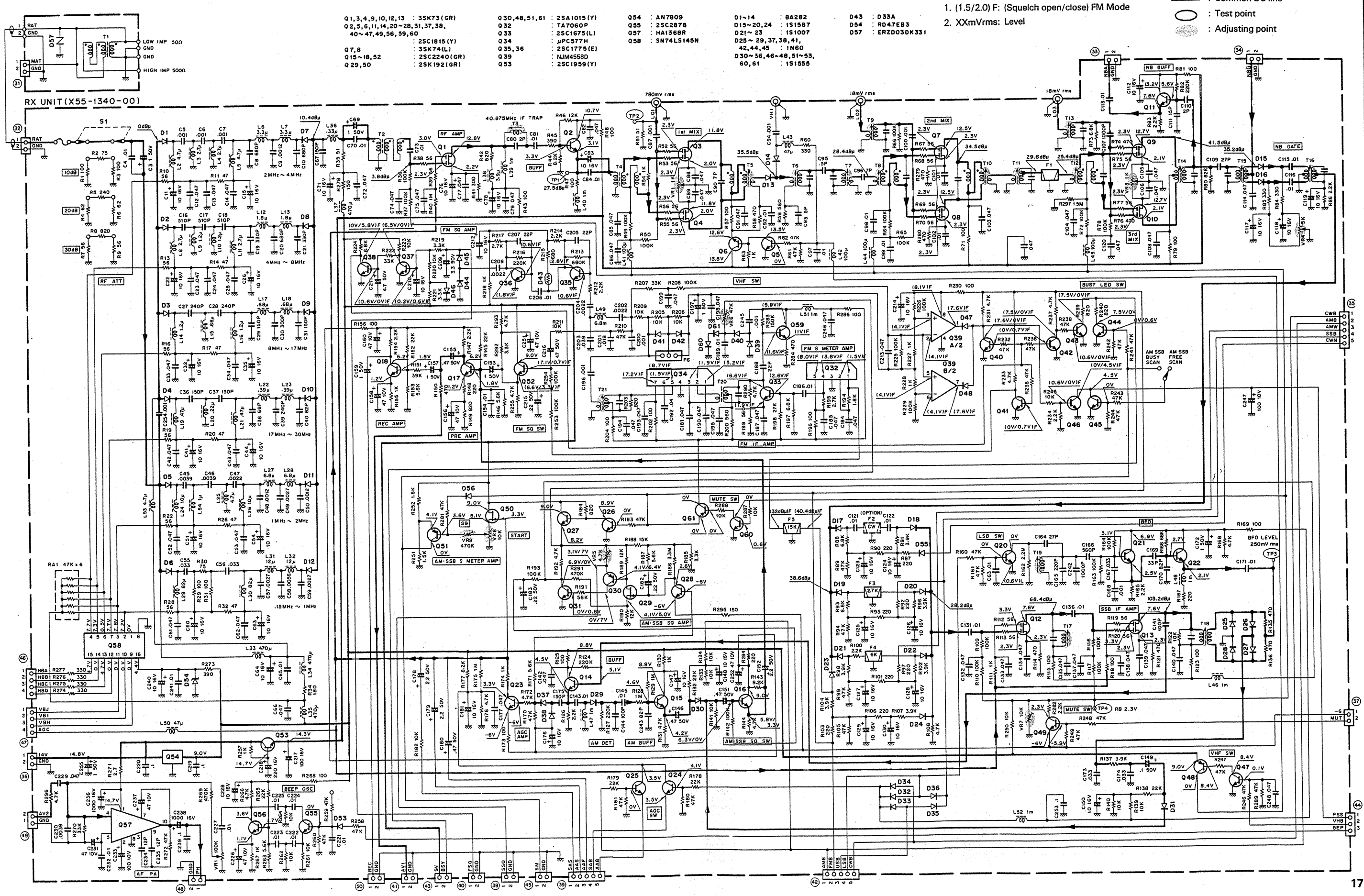

R-2000

SCHEMATIC DIAGRAM PLL UNIT (X50-1920-00)

Measurement conditions.
Freq.: 14.525 MHz, USB, RX no signal

——— : Signal line
- - - - : Control line
——— : Common DC line
◯ : Test point
: Adjusting point

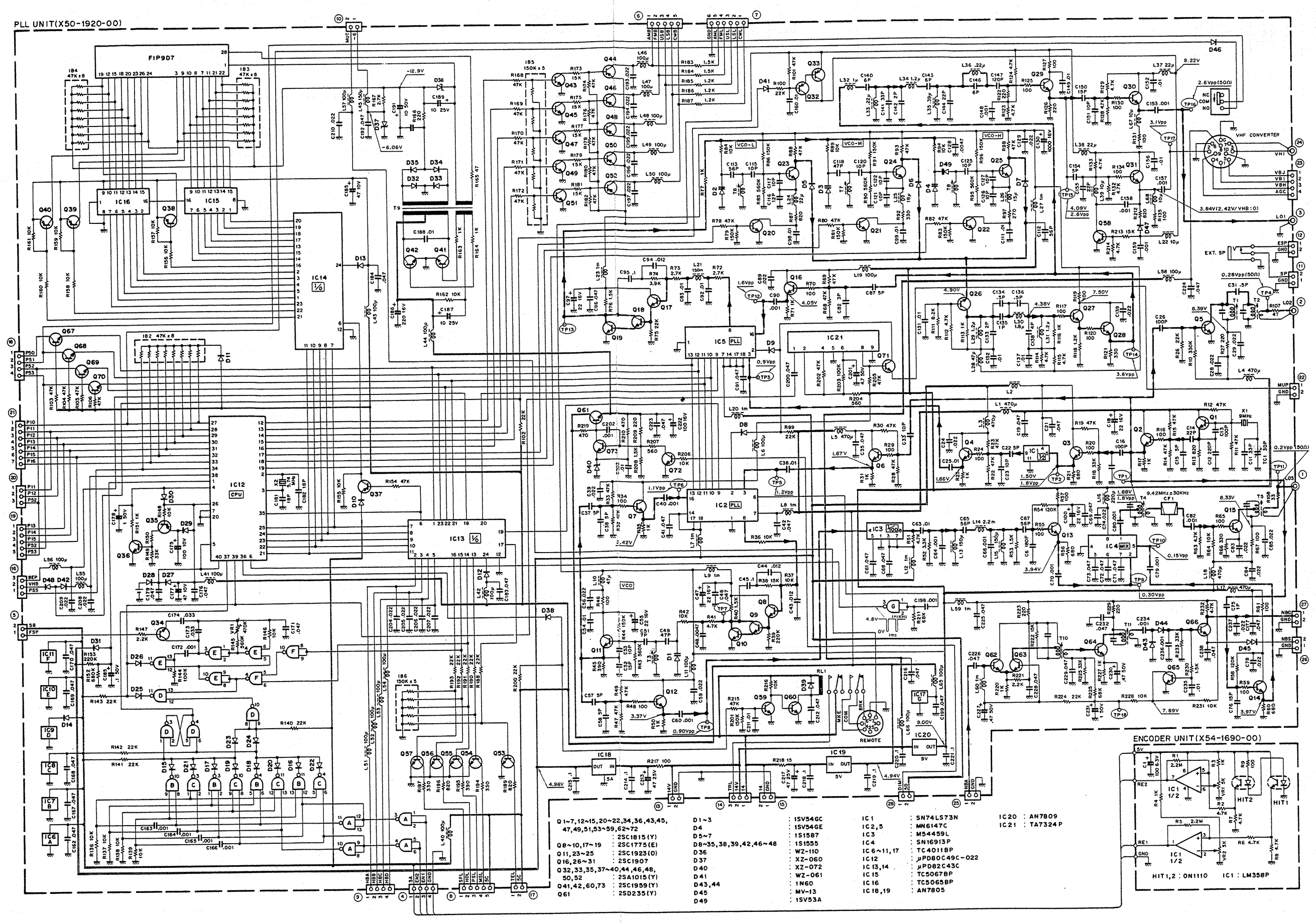

Q1~7,12~15,20~22,34,36,43,45, 47,49,51,53~59,62~72	: 2SC1815(Y)	D1~3	: 1SV54GC	IC1	: SN74LS73N
Q8~10,17~19	: 2SC1775(E)	D4	: 1SV54GE	IC2,5	: MN6147C
Q11,23~25	: 2SC1923(O)	D5~7	: 1S1587	IC3	: M54459L
Q16,26~31	: 2SC1907	D8~35,38,39,42,46~48	: 1S1555	IC4	: SN16913P
Q32,33,35,37~40,44,46,48, 50,52	: 2SA1015(Y)	D36	: WZ-110	IC6~11,17	: TC4011BP
Q41,42,60,73	: 2SC1959(Y)	D37	: XZ-060	IC12	: μPD80C49C-022
Q61	: 2SD235(Y)	D40	: XZ-072	IC13,14	: μPD82C43C
		D41	: WZ-061	IC15	: TC5067BP
		D43,44	: 1N60	IC16	: TC5065BP
		D45	: MV-13	IC18,19	: AN7805
		D49	: 1SV53A	IC20	: AN7809
				IC21	: TA7324P

PC BOARD VIEWS

PLL UNIT (X50-1920-00) Component side view

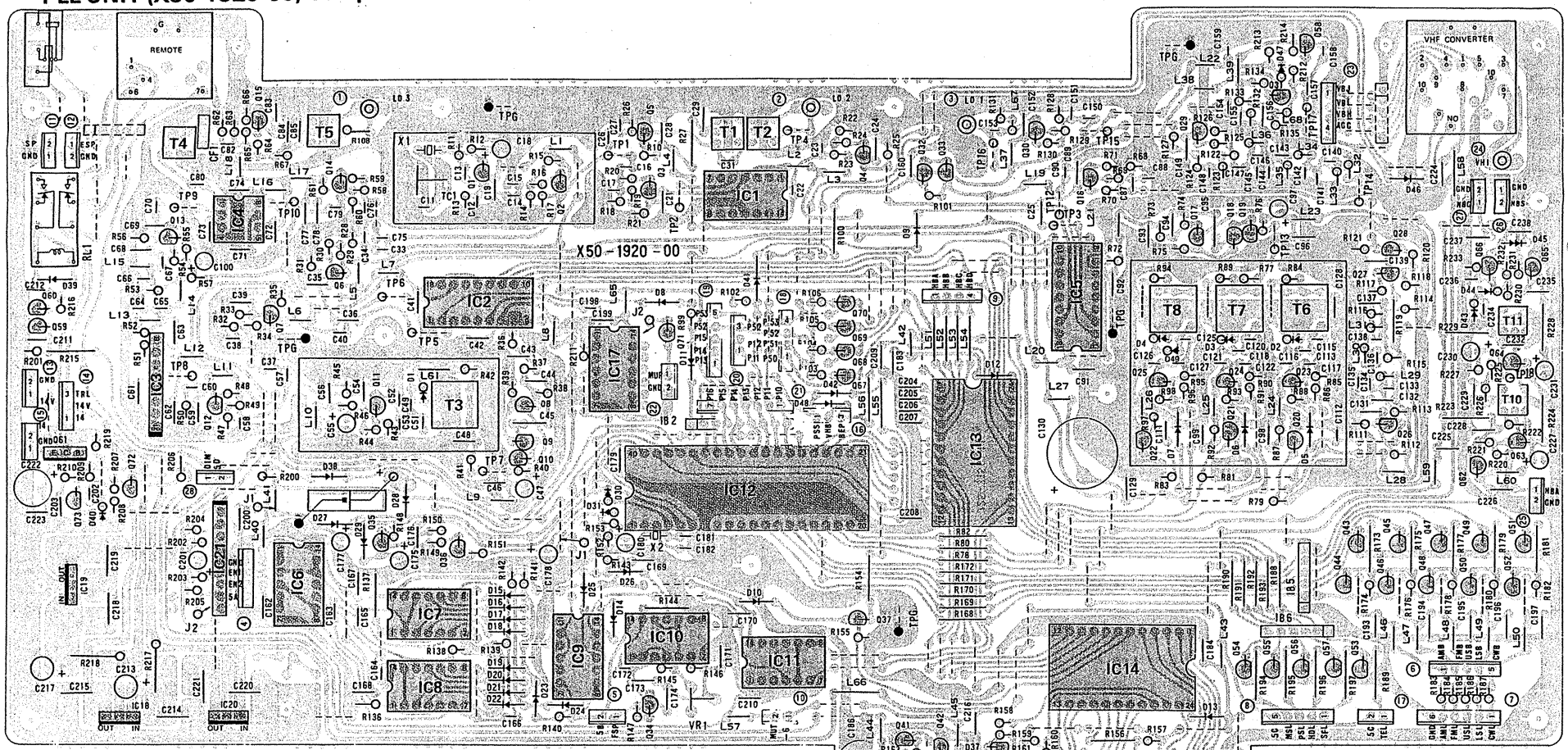

ENCODER UNIT (X54-1690-00)

Component side view

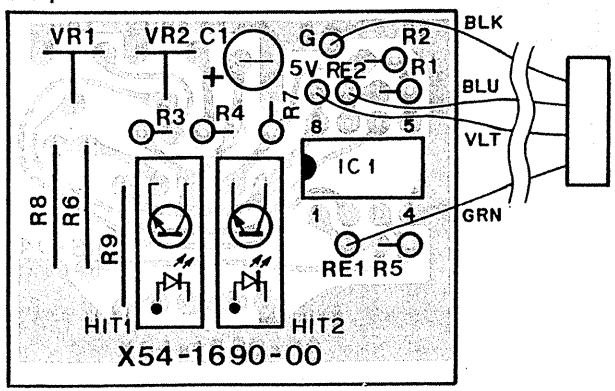

MV-13

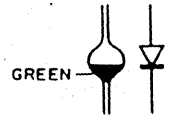

TA7324P

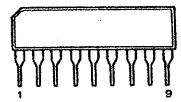

M54459L

AN7805
AN7809

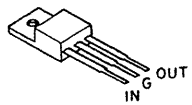

2SA1015 (Y)
2SC1775 (E)
2SC1815 (Y)
2SC1907
2SC1923 (O)
2SC1959 (Y)

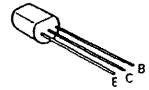

2SD235 (Y)

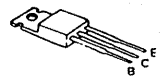

R-2000

R-2000

PC BOARD VIEWS

SWITCH UNIT (X41 - 1480 - ○○) Component side view

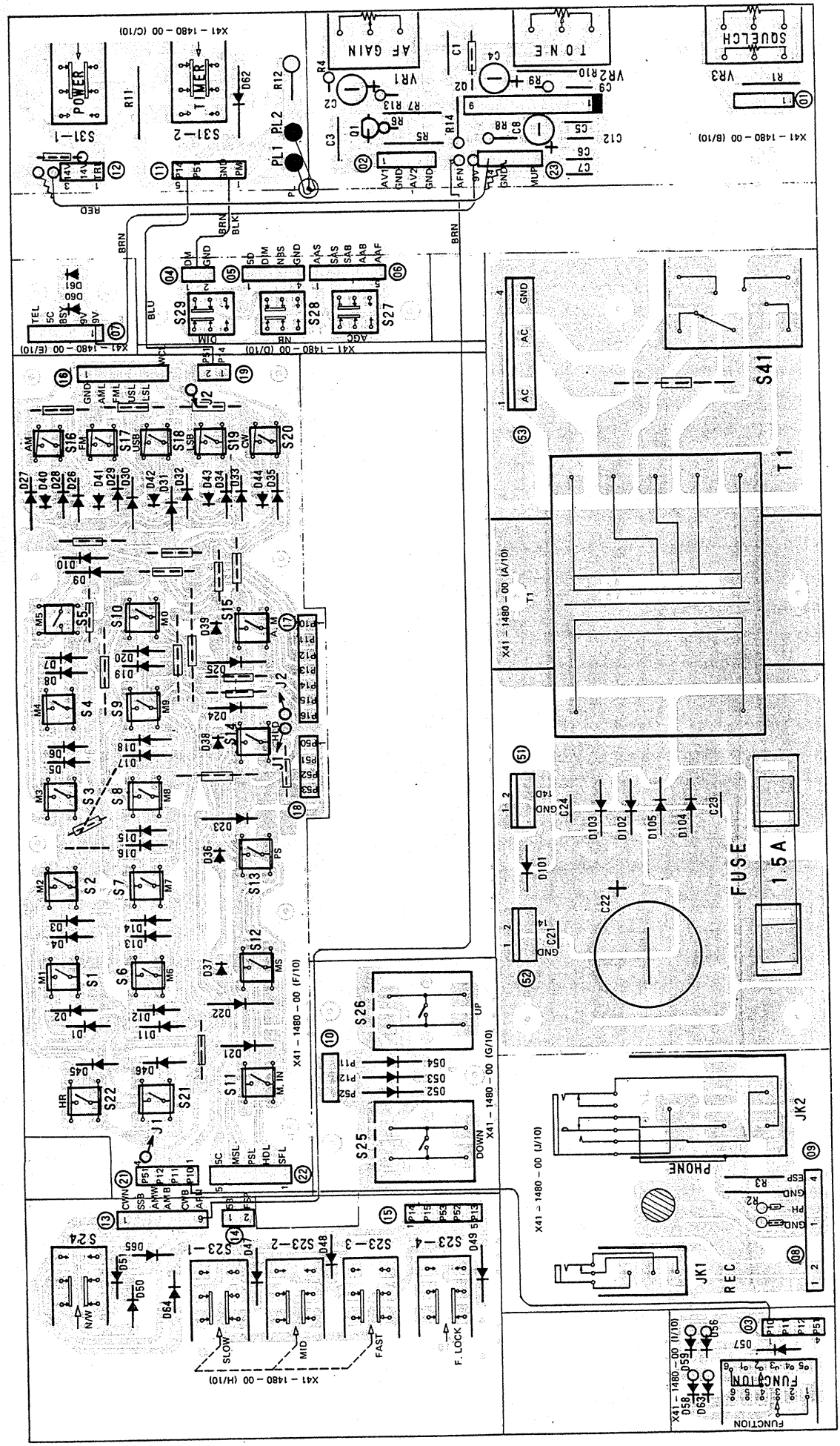

SCHEMATIC DIAGRAM

R-2000

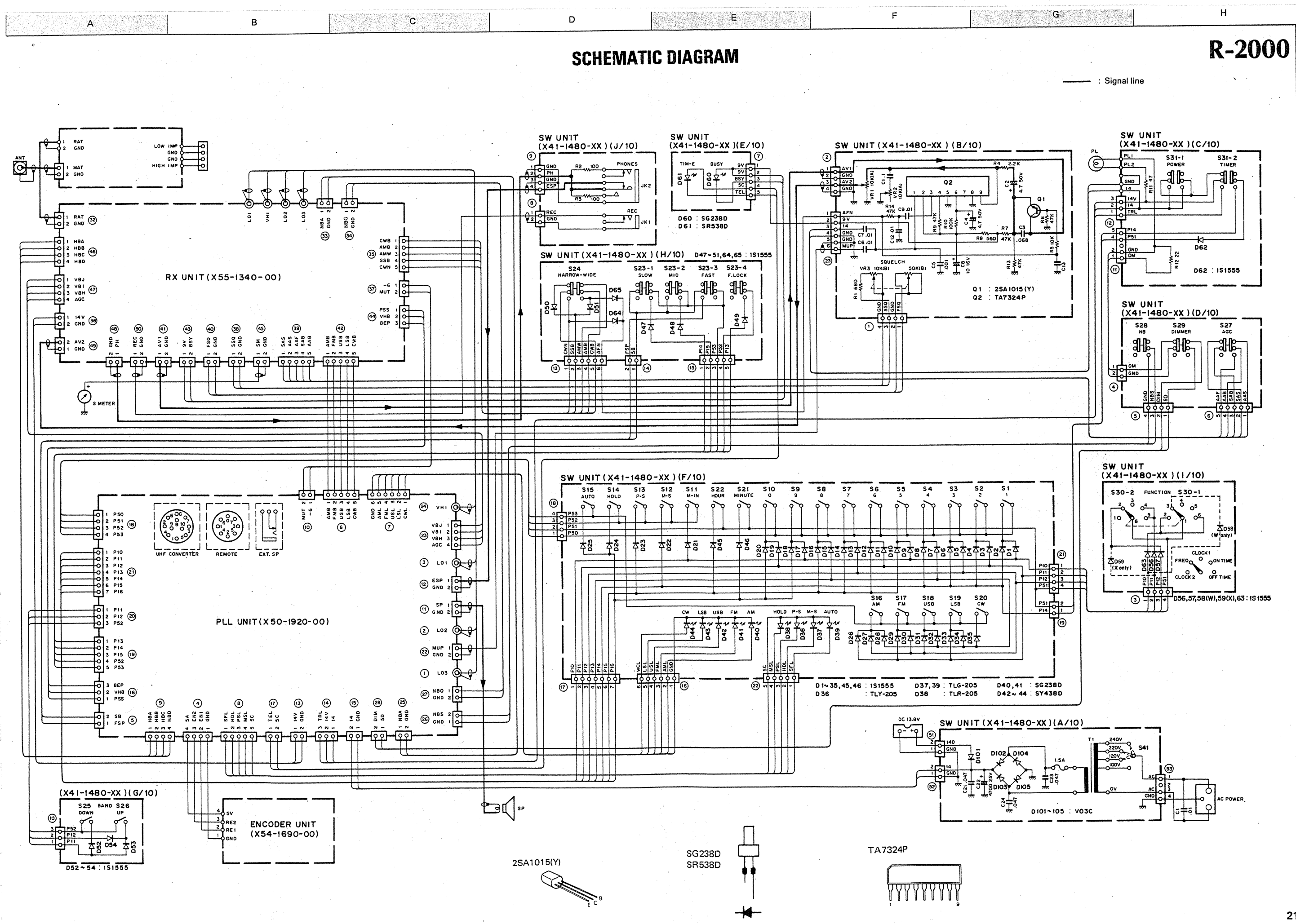

DISASSEMBLY

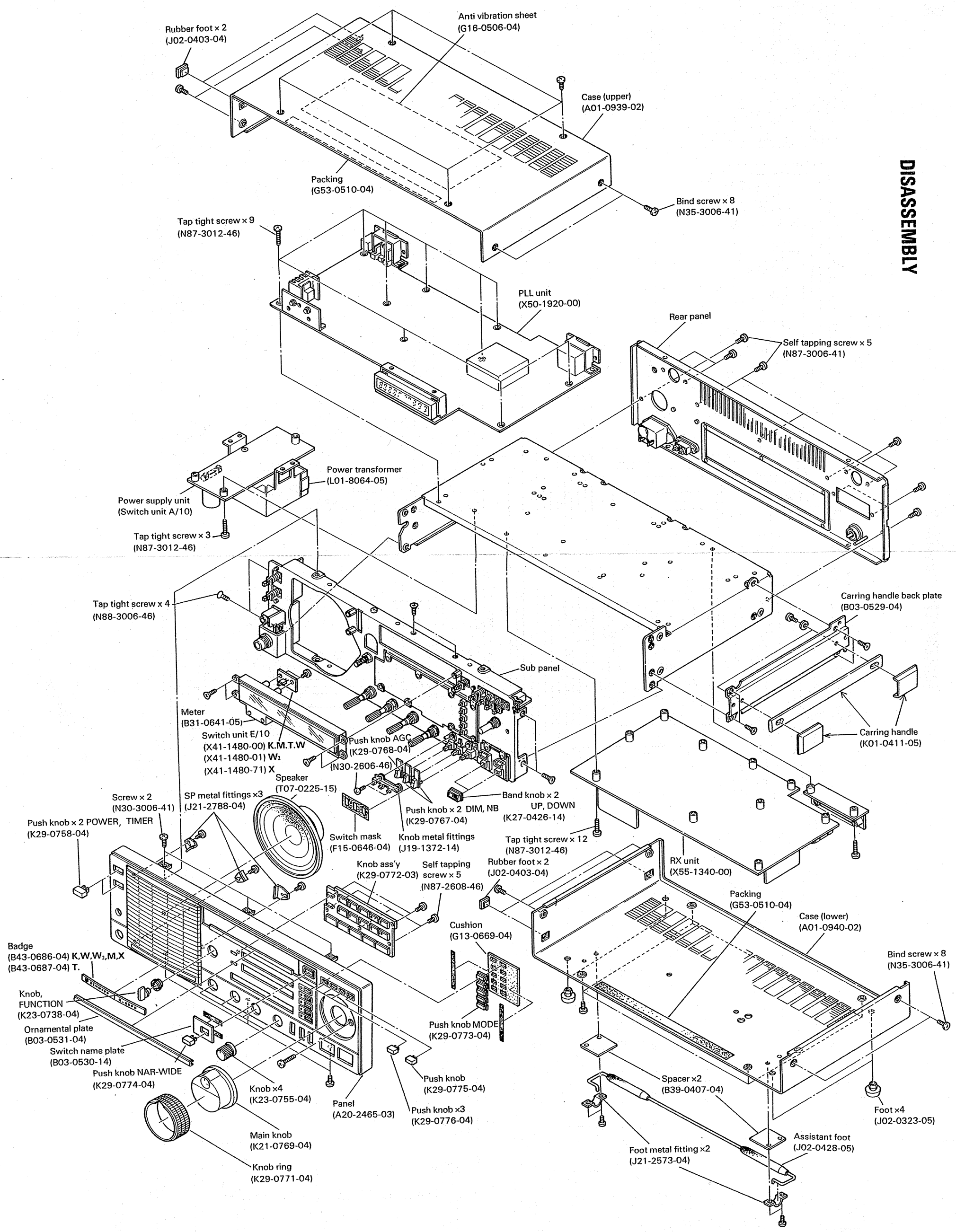

PACKING

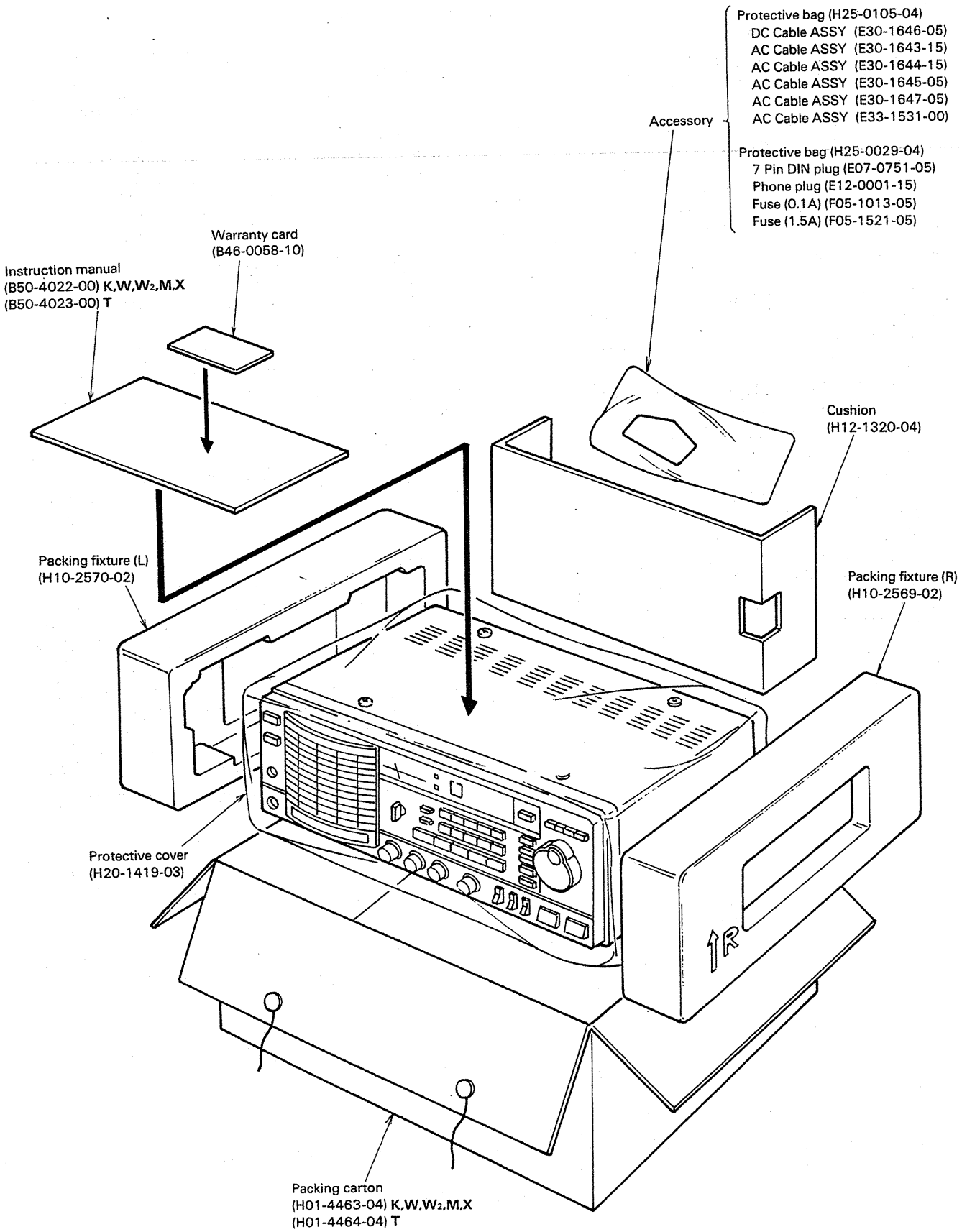
Protective bag (H25-0105-04)
DC Cable ASSY (E30-1646-05)
AC Cable ASSY (E30-1643-15)
AC Cable ASSY (E30-1644-15)
AC Cable ASSY (E30-1645-05)
AC Cable ASSY (E30-1647-05)
AC Cable ASSY (E33-1531-00)
Accessory
Protective bag (H25-0029-04)
7 Pin DIN plug (E07-0751-05)
Phone plug (E12-0001-15)
Fuse (0.1A) (F05-1013-05)
Fuse (1.5A) (F05-1521-05)
Warranty card
(B46-0058-10)
Instruction manual
(B50-4022-00) K,W,W2,M,X
(B50-4023-00) T
Cushion
(H12-1320-04)
Packing fixture (L)
(H10-2570-02)
Packing fixture (R)
(H10-2569-02)
Protective cover
(H20-1419-03)
Packing carton
(H01-4463-04) K,W,W2,M,X
(H01-4464-04) T

ADJUSTMENT

REQUIRED TEST EQUIPMENT

1. VTVM or DVM (DC VM)

1) Input resistance: More than 1 MΩ
2) Voltage range: 1.5 to 1000V DC

NOTE: A high-precision voltmeter may be used. However, accurate readings can not be obtained for high-impedance circuits.

2. AF VTVM (AF VM)

1) Frequency range: 50 Hz to 10 kHz
2) Input impedance: 1 MΩ or greater
3) Voltage range: 10 mV to 30V

3. AF DUMMY LOAD

1) Impedance: 8Ω
2) Dissipation: 3W or greater

4. OSCILLOSCOPE

Requires high sensitivity and external synchronization capability.

5. STANDARD SIGNAL GENERATOR (SSG)

1) Frequency range: 100 kHz to 80 MHz
2) Output: –20 dB/0.1 μV to 120 dB/1V
3) Output Z = 50 Ω
4) Should have AM modulation capability. Generator must be frequency stable.

6. FREQUENCY COUNTER

1) Minimum input voltage: 50 mV
2) Frequency range: Greater than 80 MHz

7. NOISE GENERATOR

Must generate ignition-like nose containing harmonics beyond 30 MHz.

PREPARATION

Unless otherwise specified, set the controls as follows.

POWER	ON
TIMER	OFF
FUNCTION	FREQUENCY
NARROW/WIDE	WIDE
TUNING SPEED	SLOW
F. LOCK	OFF
MODE	AM
AGC FAST	OFF
NB	OFF
DIMMER	OFF
AF GAIN	MIN
TONE	CENTER
SQUELCH	MIN
RF ATT	0
M.SCAN	OFF
PG.SCAN	OFF
AUTO.M	OFF

REFERENCE

Japanese "SSG"	American "SG"
–6 dB	0.25 μV
0 dB	0.5 μV
6 dB	1 μV
12 dB	2 μV
24 dB	8 μV
30 dB	15.8 μV
40 dB	50 μV
50 dB	158 μV
60 dB	500 μV
70 dB	1.58 mV
80 dB	5 mV
90 dB	15.8 mV
100 dB	50 mV
120 dB	0.5 V

ADJUSTMENT

Adjusting PLL Section

Item	Condition	Measurement			Adjustment			Specifications
		Test equipment	Unit	Ter-minal	Unit	Part	Method	
1. Reference oscillator frequency	1) POWER: ON	Frequency counter	PLL	TP4	PLL	TC1	36,000,000 Hz	±20 Hz
2. VCO	1) MODE: AM f: 17,000.0 kHz	DC VM	PLL	TP7	PLL	T3	7.5V	±0.05V
	2) f: 16,999.9 kHz						Check	2.3V or more
3. VCO-H	1) MODE: AM f: 29,999.9 kHz (W2 type) f: 25,999.9 kHz	DC VM	PLL	TP13	PLL	T8	7.8V 5.6V	±0.05V
	2) f: 17,000.0 kHz						Check	2.0V or more
4. VCO-M	1) MODE: AM f: 16,999.9 kHz	DC VM	PLL	TP13	PLL	T7	7.8V	±0.05V
	2) f: 8,000.0 kHz						Check	2.0V or more
5. VCO-L	1) MODE: AM f: 7,999.9 kHz	DC VM	PLL	TP13	PLL	T6	7.8V	±0.05V
	2) f: 100.0 kHz						Check	2.0V or more
	(W2 type) f: 150.0 kHz							
	(X type) f: 2,000.0 kHz						Check	3.0V or more
6. Encoder	1) Remove the MAIN knob and motor-drive the encoder at approx. 300 rpm.	Oscillo-scope	PLL	Connec-tor ④-EN1		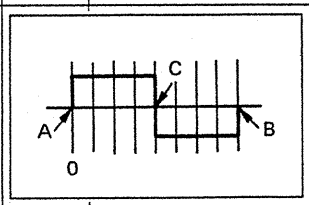		Point C may be located anywhere. When motor drive is not available, manually turn the MAIN control to check the duty ratio.
	2) EN1 duty ratio adjustment: Turn a motor clockwise and counterclockwise.				Encoder	VR1 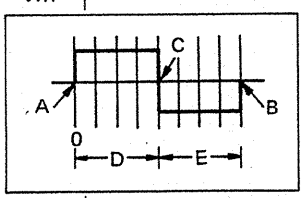		After adjusting with the MAIN control turned CW, check that intervals D and E are also identical when the MAIN control is turned CCW.
	3) EN2 duty ratio adjustment: Turn a motor in the both direction.			Connec-tor ④-EN2		VR2	Adjust until intervals D and E are equal to each other with point C placed at the center.	
	4) EN1, EN2 phase difference adjustment: Same as above.			Connec-tor ④-EN1 and EN2		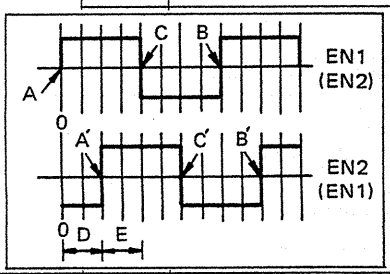		EN1 (EN2): Within 90° ±20% (The difference between CW and CCW rotation must also be within this specification.) The phases of EN1 and EN2 may be replaced with each other as indicated in the brackets.
7. PG SCAN SPEED	1) f: 15,000.0 kHz MEMORY CH: 9 Write in with M. IN switch.							
	2) f: 15,010.0 kHz MEMORY CH: 0 Write in with M. IN switch.							
	3) PG SCAN: ON				PLL	VR1	Turn clockwise/counter-clockwise to check scan speed change. Set to mechanical center.	

ADJUSTMENT

Adjusting Receiver Section

Item	Condition	Measurement			Adjustment			Specifications
		Test equipment	Unit	Terminal	Unit	Part	Method	
1. RB voltage		DC VM	RX	TP4	RX	VR7	2.3V	
2. BFO (Coarse adjustment)	1) MODE: USB	Frequency counter	RX	TP3	RX	T19	456,500 Hz	±50 Hz
3. Sensitivity (RF,IF amp)	1) f: 14,525.0 kHz MODE: USB AGC: FAST SSG output: 0 dBμ	SSG AF VM Oscilloscope AF dummy load	Rear panel	ANT	PLL	T1, T2, T4, T5	MAX	
				EXT SP	RX	T5 to T16, T18	MAX Perform adjustment in the following order: T5, T6, T7, T8, T7, T6, T5, T9, T10, T11, T12, T11, T10, T11, T12, T11, T10, T13, T14, T15, T16, T18.	S/N: 10 dB or more
4. 1st MIX BALANCE	1) f: 187.3 kHz MODE: USB TUNING STEP: SLOW	AF VM Oscilloscope AF dummy load	Rear panel	EXT SP	RX	VR1	MIN. Heterodyne	
5. BFO (Fine adjustment)	1) f: 14,525.0 kHz MODE: USB, then LSB	SP			RX	T19	Alternate MODE between USB and LSB and adjust for equal noise tone. (Equal highs and lows)	
	2) SSG output: 14.525 MHz 0 dBμ	SSG AF VM Oscilloscope AF dummy load	Rear panel	ANT EXT SP			Receive the 14.525 MHz generator signal in USB mode, tune for 1 kHz beat frequency, and AF output at 0.63V/8Ω. Set to LSB mode, adjust for 1 kHz beat and measure the AF output difference.	Within 1.5 dB
6. FM sensitivity (FM IF amp)	1) f: 14,525.0 kHz MODE: FM SSG output: 6 dBμ (MODE: 1 kHz DEV: 5 kHz)	SSG AF VM Oscilloscope AF dummy load	Rear panel	ANT EXT SP	RX	T21	MAX	S/N: 20 dB or more
	2) SSG output: 6 to 100 dBμ						Confirm that the output is constant from 6 dB to 100 dB.	Specified output.
7. S meter	1) MODE: USB AGC: FAST	S meter			RX	VR8	Zero adjustment. Set to S meter starting point.	
	2) f: 14,525.0 kHz SSG output: 8 dBμ	SSG S meter	Rear panel	ANT		T17	S-1 Adjust CCW from the peak.	
	3) SSG output: 30 dBμ					VR9	S-9	
	4) MODE: FM SSG output: 30 dBμ					VR6	+40 dB	
8. Squelch	1) MODE: FM AGC: SLOW SQUELCH: Threshold	SP					Check	Between 1 and 3 (Squelch level) BUSY indicator goes off.
	2) MODE: USB				RX	VR5	Point at which noise disappears.	
	3) f: 14,525.0 kHz MODE: USB SQUELCH: Threshold SSG output: 20 dBμ	SSG AF VM Oscilloscope AF dummy load	Rear panel	ANT			Check	The squelch should open at less than 20 dBμ and the BUSY indicator should light.
	4) MODE: FM SQUELCH: Threshold SSG output: 0 dBμ							The squelch should open at less than 0 dBμ and the BUSY indicator should light.

ADJUSTMENT

Item	Condition	Measurement			Adjustment			Specifications
		Test equipment	Unit	Terminal	Unit	Part	Method	
9. NB	1) f: 14,525.0 kHz MODE: AM WIDE/NARROW: WIDE NB: ON Noise generator output level: S meter indicator 5 ± 1	Noise generator	Rear panel	ANT	RX	VR4	MIN	S1 or less (Typical)
	2)				PLL	T10, T11	Repeat steps 1) and 2) so the NB functions on noise which is below the minimum S meter level.	
10. 1st IF trap	1) f: 29,525.0 kHz MODE: USB SSG output: 45.875 MHz " 90 dBμ	SSG AF VM Oscilloscope AF dummy load	Rear panel	ANT	RX	T3	MIN	70 dB or more
11. "Beeper"	1) AF GAIN: Center TONE: Center SQUELCH: Closed (No noise) * Connect R259 and R273. (Disconnect after adjustment.)	AF VM Oscilloscope AF dummy load	Rear panel	EXT SP	RX	VR10	0.3V	Tone should remain audible even when the AF GAIN is reduced to MIN.

<Microprocessor operational check>

Item	Condition	Operation Check
1. Encoder (Dial)	1) TUNING SPEED: SLOW Turn the tuning control clockwise and counterclockwise.	Display changes in 100 Hz steps.
	Turn the main tuning 1 turn.	Display changes 10 kHz.
	2) TUNING SPEED: MID Turn the tuning control clockwise and counterclockwise.	Display changes in 500 Hz step.
	Turn the main tuning 1 turn.	Changes 100 kHz.
	3) TUNING SPEED: FAST Turn the tuning control clockwise and counterclockwise.	Changes in 5 kHz step.
	Turn the main tuning 1 turn.	Changes 1 MHz.
2. BAND	1) TUNING SPEED: FAST Keep the UP switch depressed until tuning stops. Then turn the tuning control clockwise.	The MHz digit scans up in 1 MHz steps and stop when the display indicates 29,995.0 kHz. W2 type stops tuning at 25,995.0.
	Keep the DOWN switch depressed until tuning stops. Turn the tuning control counterclockwise.	The MHz digit scans down to 0.100.0 at a 1 MHz step. W2 type stops tuning at 0.150.0 and X type stops at 2.000.0
3. F. LOCK	1) F. LOCK: ON Turn the tuning control and BAND knob.	The display should not change.

Item	Condition	Operation Check
4. DIMMER	DIMMER: ON	The S meter and display illumination should be reduced.
5. CLOCK and TIMMER	1) POWER: OFF FUNCTION: CLOCK 1	The clock should function. The illumination should be dim.
	2) TIMER: ON	* TIMER ERROR (red) indicator should light. * CLOCK display flashes.
	3) TIMER: ON Simultaneously press both the HOUR and MINUTE TIME SET switches.	* CLOCK display should be 0:00. * TIMER ERROR (red) indicator should go off.
	4) FUNCTION: CLOCK 2 Keep the HOUR and MINUTE switches depressed.	The display should continuously advance.
	Set the hours digit.	The display should indicate the time difference from CLOCK 1.
	5) FUNCTION: ON Set the TIMER display to 0.02.	
	6) FUNCTION: OFF Set the TIMER display to 0.03.	
	7) FUNCTION: CLOCK 1 Set the TIMER display to 0.02.	Power should turn on and the unit should function.
	Set the TIMER display to 0.03.	Power should shut off.

ADJUSTMENT

Item	Condition	Operation Check
6. RECALL and MODE	1) POWER: ON TIMER: OFF FUNCTION: FREQUENCY Press memory switches (1 through 0).	* The MEMO indicator should change from 1 through 0. * The frequency display should indicte 15,000.0 for each channel.
	Press MODE AM, FM, USB, LSB and CW switches.	* The green indicators should light for AM and FM modes. * The yellow indicators should light for USB, LSB and CW modes.
7. MEMORY	1) MODE: USB Press the M. IN switch and store 10,615.0 in channel 9.	The beep should be heard when data is stored in channels 9 and 0.
	Press the M. IN switch and store 10,635.0 in channel 0.	
8. M. SCAN	1) M. SCAN: ON	The M. SCAN indicator (green) should light and each channel should be scanned for 2 seconds.
	2) HOLD: ON (Release after test)	The scan should stop and the HOLD indicator (red) should light. When the HOLD switch is again depressed, scanning should resume.
9. Select SCAN	1) M. SCAN: ON Press channels 1 through 3 and then channel 2 again (twice).	"C" should be displayed on the MEMO indicator and channels 1 and 3 should be scanned continuously.
10. PG. SCAN	1) PG. SCAN: ON	* The PG. SCAN indicator (yellow) should light. * "P" should be displayed on the MEMO indicator and the USB indicator should light. * The scan should start from 10,615.0 at 5 kHz interval. When 10,635.0 is reached, a "beep" should sound and the scan should restart from 10,615.0.
	2) HOLD: ON Turn the tuning control clockwise and counter-clockwise.	Scan should stop. The frequency should change from 10,615.0 to 10,635.0.

Item	Condition	Operation Check
11. AUTO. M	1) AUTO. M: ON Press channel 1 and store 17,000.0 then press channel 2 and 1.	The AUTO. M indicator (green) should light and 17,000.0 should be displayed.
12. Reset	1) POWER: OFF Keep the power cable connected to the receiver and disconnect the lithium battery (–) terminal.	
	Disconnect the power cable and ground IC12 pin 40. (IC12: μPD80C49C-022)	
	Reconnect the power cable. POWER: ON AUTO. M: ON	Indication MEMO: E f : 150,055.0
	Disconnect, then reconnect the power cable.	Indication MEMO: 1 f : 15,000.0
	POWER: OFF Reconnect the lithium battery (–) terminal.	
	2) POWER: ON	Indication MEMO: 1 f : 15,000.0
	Disconnect the power cable. Reconnect the power after approximately 30 minutes.	The memory contents should be retained and the above should be displayed
	3) MEMORY: 1	Indication MEMO: 1 f : 15,000.0
	MEMORY: 2	MEMO: 2 f : 15,000.0
	⋮ MEMORY: 0	⋮ MEMO: 0 f : 15,000.0

ADJUSTMENT POINT

▼ TOP VIEW

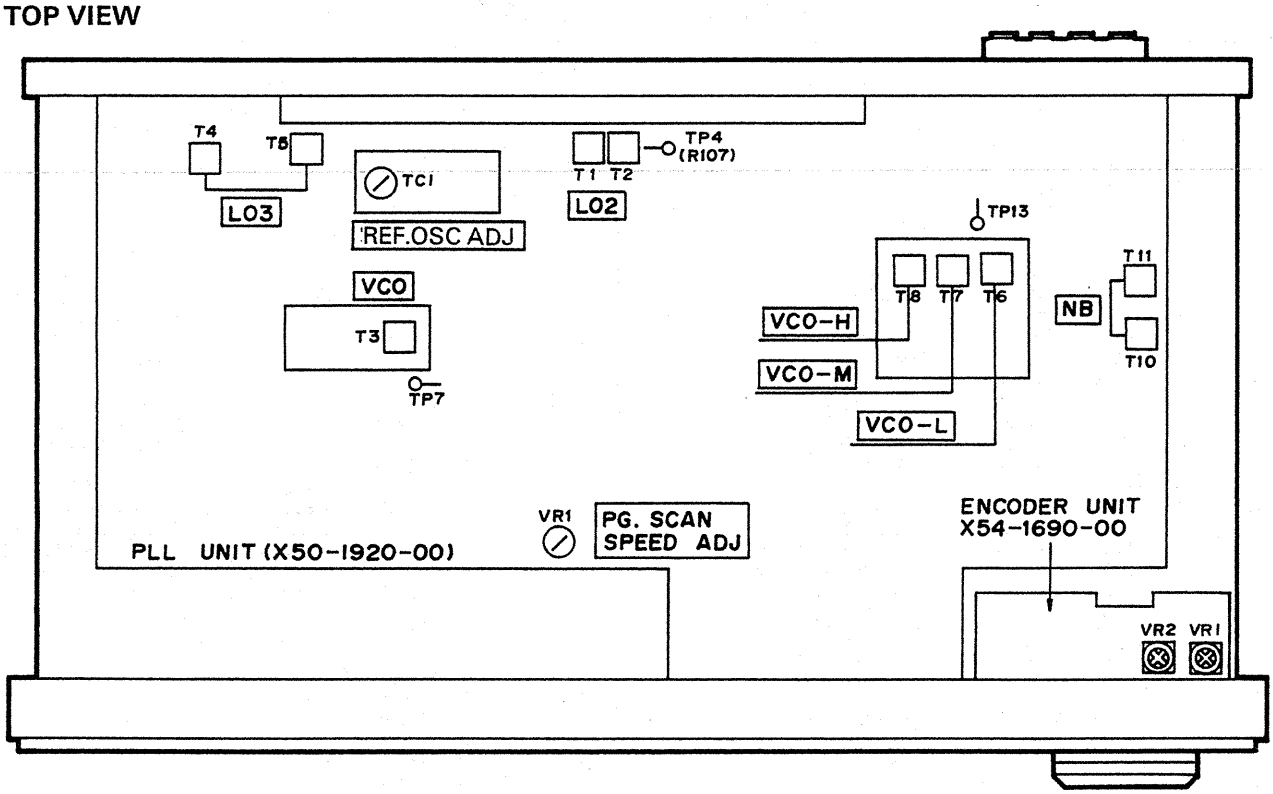

▼ BOTTOM VIEW

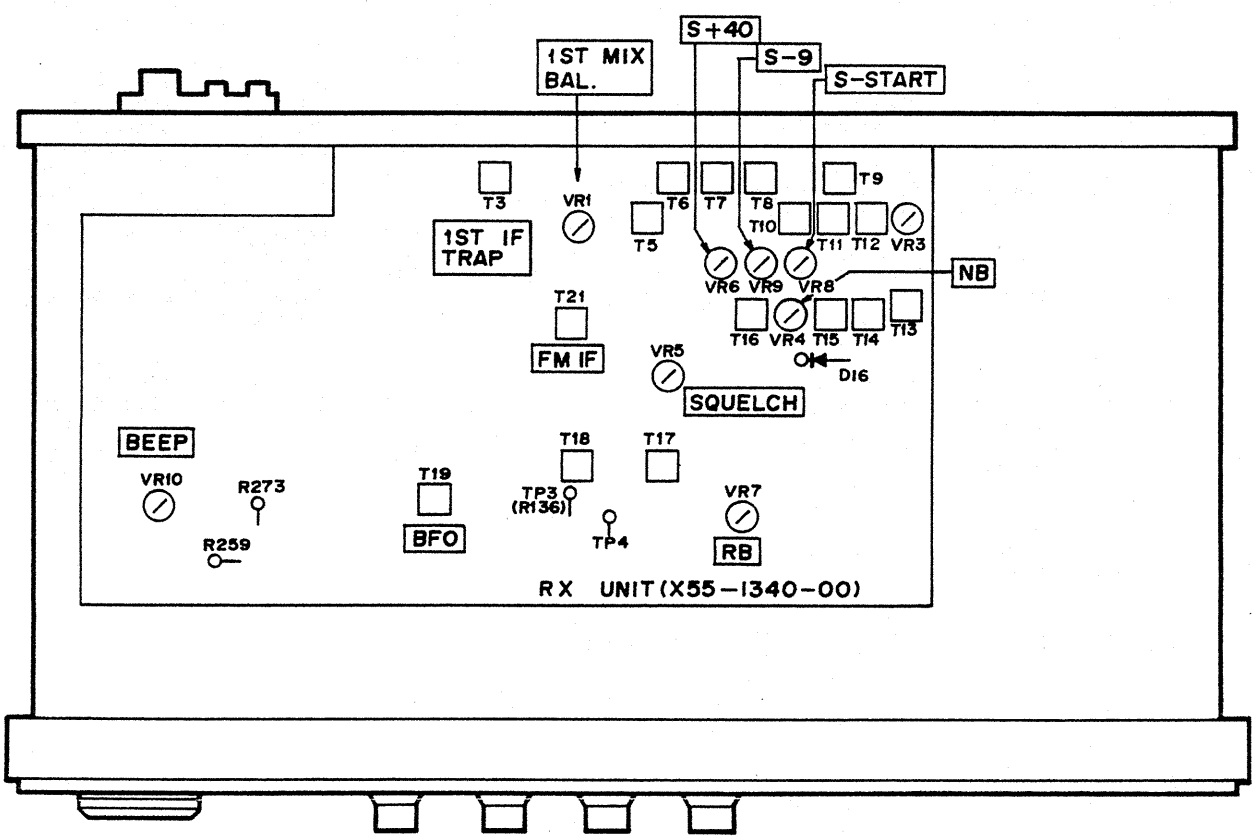

TERMINAL FUNCTION

PLL unit

Connector No.	Terminal No.	Name	Destination	Function
1		L03	RX	3rd Local OSC output
2		L02	RX	2nd Local OSC output
3		L01	RX	1st Local OSC output
4	1	5A	Encoder	5V line
	2	EN2	Encoder	Pulse input
	3	EN1	Encoder	Pulse input
	4	GND	Encoder	
5	1	FSP	Switch	Program SCAN speed adjust terminal
	2	5B	Switch	5V line
6	1	AMB	RX	AM, 9V line
	2	FMB	RX	FM, 9V line
	3	USB	RX	USB, 9V line
	4	LSB	RX	LSB, 9V line
	5	CWB	RX	CW, 9V line
7	1	CWL	Switch	CW LED (Y) light
	2	LSL	Switch	LSB LED (Y) light
	3	USL	Switch	USB LED (Y) light
	4	FML	Switch	FM LED (G) light
	5	AML	Switch	AM LED (G) light
	6	GND	Switch	
8	1	SFL	Switch	AUTO-M LED (G) light
	2	HDL	Switch	HOLD LED (R) light
	3	PSL	Switch	P.SCAN LED (Y) light
	4	MSL	Switch	M.SCAN LED (G) light
	5	5C	Switch	5V line
9	1	HBA	RX	BPF select signal
	2	HBB	RX	BPF select signal
	3	HBC	RX	BPF select signal
	4	HBD	RX	BPF select singal
10	1	–6	RX	–6V line
	2	MUT	RX	MUTE control
11	1	GND	SP	
	2	SP	SP	Speaker line
12	1	ESP	Phone jack	
	2	GND	Phone jack	
13	1	14V	RX	RX 14V line
	2	GND	RX	
14	1	14	Switch	14V line
	2	14V	Switch	14V line
	3	14L	Switch	14V line
15	1	GND	Switch	
	2	14	Switch	14V line
16	1	PSS	RX	Program SCAN stop input
	2	VHB	RX	VHF signal output (VHF:H)
	3	BEP	RX	BEEP control output (BEEP:H)
17	1	TEL	Switch	Timer error, LED(R)light
	2	5C	Switch	5V line
18	1	P50	Switch	Output common bus
	2	P51	Switch	Output common bus
	3	P52	Switch	Output common bus
	4	P53	Switch	Output common bus
19	1	P13	Switch	Input data bus
	2	P14	Switch	Input data bus
	3	P15	Switch	Input data bus
	4	P52	Switch	Output common bus
	5	P53	Switch	Output common bus
20	1	P11	Switch	Input data bus
	2	P12	Switch	Input data bus
	3	P52	Switch	Output common bus
21	1	P10	Switch	Input data bus
	2	P11	Switch	Input data bus
	3	P12	Switch	Input data bus
	4	P13	Switch	Input data bus
	5	P14	Switch	Input data bus
	6	P15	Switch	Input data bus
	7	P16	Switch	Input data bus
22	1	MUP	Switch	Unlock AF muting output
	2	GND	Switch	
23	1	VBJ	RX	VHF converter, Band input
	2	VBI	RX	VHF converter, Band input
	3	VBH	RX	VHF converter, Band input
	4	AGC	RX	VHF converter, AGC input
24		VHI	RX	VHF converter, IF output
25	1	NBA	RX	NB, IF input
	2	GND	RX	
26	1	GND	Switch	
	2	NBS	Switch	NB switch, GND:ON
27	1	NBG	RX	NB switching pulse output
	2	GED	RX	
28	1	DIM	Switch	Dimmer switch
	2	5D	Switch	5V line

RX unit

Connector No.	Terminal No.	Name	Destination	Function
31	1	MAT	UHF Receptacle	
	2	GND		
32	1	RAT		Receiver input
	2	GND		
33	1	NBA	PLL	NB, IF output
	2	GND	PLL	
34	1	NBG	PLL	NB, Switching pulse input
	2	GND	PLL	
35	1	CWB	Switch	CW, 9V line input
	2	AMB	Switch	AM, 9V line input
	3	AMW	Switch	AM wide, 9V line input
	4	SSB	Switch	SSB, 9V line input
	5	CWN	Switch	CW narrow, 9V line input
36	1	14V	PLL	14V input
	2	GND	PLL	
37	1	–6	PLL	–6V input
	2	MUT	PLL	Muting control signal input
38	1	SSQ	Switch	SSB, squelch Adj input
	2	GND	Switch	
39	1	SAS	Switch	AGC select (SSB SLOW)
	2	AAS	Switch	AGC select (AM SLOW)
	3	AAF	Switch	AGC select (AM FAST)
	4	SAB	Switch	AGC select (SSB AGC reference voltage)
	5	AAB	Switch	AGC select (AM AGC reference voltage)
40	1	FSQ	Switch	FM squelch Adj input
	2	GND	Switch	
41	1	AV1	Switch	AF pre-amp, output
	2	GND	Switch	
42	1	AMB	PLL	AM, 9V input
	2	FMB	PLL	FM, 9V input
	3	USB	PLL	USB, 9V input
	4	LSB	PLL	LSB, 9V input
	5	CWB	PLL	CW, 9V input
43	1	9V	Switch	9V line output
	2	BSY	Switch	BUSY LED (G)
44	1	PSS	PLL	Program scan stop signal output
	2	VHB	PLL	High when VHF, RX
	3	BEP	PLL	Beeper control input
45	1	SM	Smeter	S-meter (+)
	2	GND	Smeter	
46	1	HBA	PLL	Band data input
	2	HBB	PLL	Band data input
	3	HBC	PLL	Band data input
	4	HBD	PLL	Band data input
47	1	VBJ	PLL	VHF converter, Band data output
	2	VBI	PLL	VHF converter, Band data output
	3	VBH	PLL	VHF converter, Band data output
	4	AGC	PLL	VHF converter, AGC output
48	1	PH	Phone jack	AF output
	2	GND	Phone jack	
49	1	GND	Switch	
	2	AV2	Switch	AF power AMP input
50	1	REC	REC jack	
	2	GND		
		L01	PLL	1st Local OSC input
		L02	PLL	2nd Local OSC input
		L03	PLL	3rd Local OSC input
		VHI	PLL	VHF converter, IF

BLOCK DIAGRAM

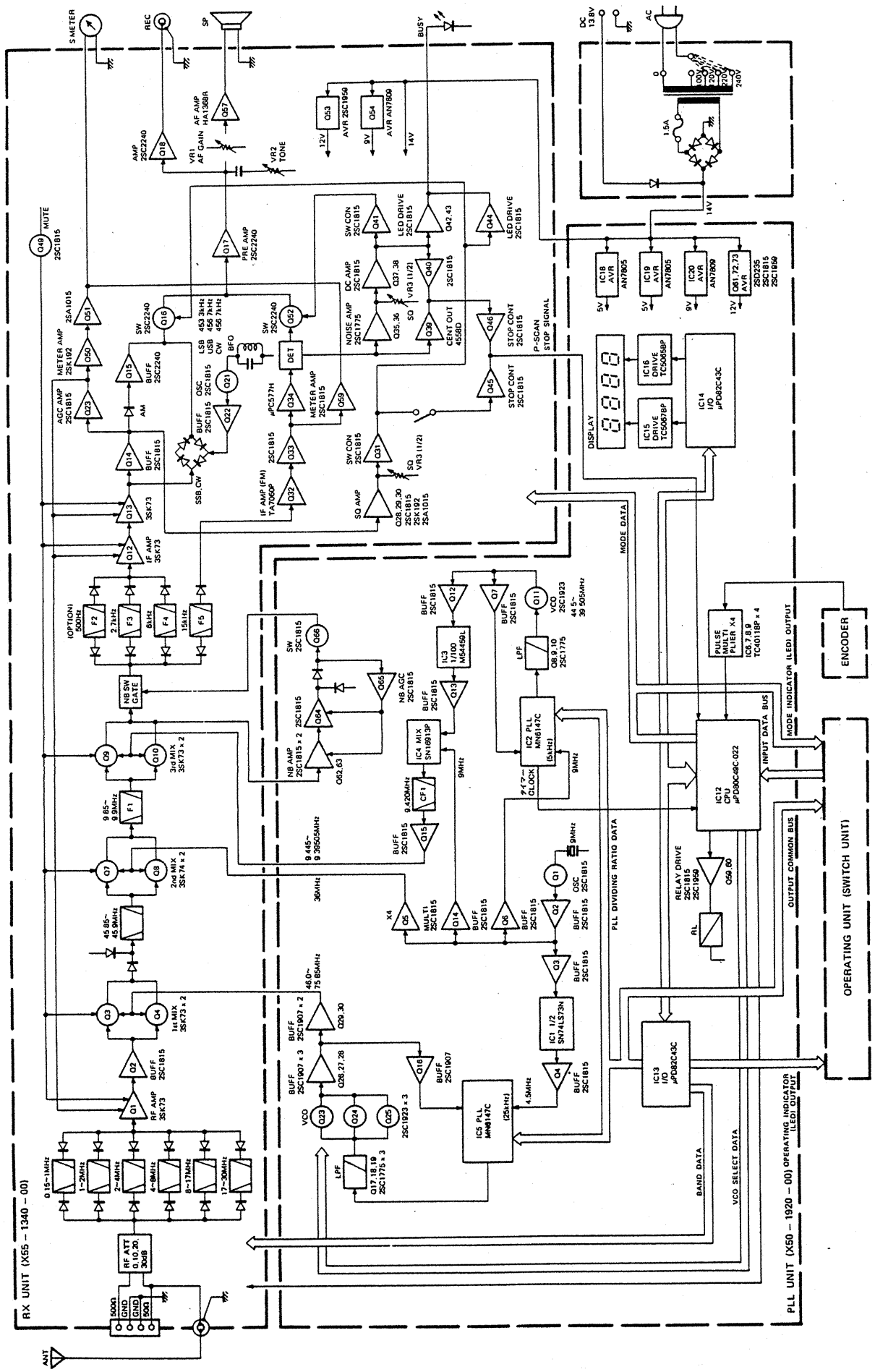

DCK-1 D.C. OPERATION KIT (OPTION)

PARTS LIST

Ref. No.	Part No.	Description	Re-marks
–	B50-2703-00	Instruction sheet	
–	E08-0203-25	Cable with 2P connector	
–	E31-2027-05	Cable with terminal	
–	E30-1646-05	DC cable ass'y	
–	F05-1023-05	Fuse UL 1A × 2	
–	H25-0029-04	Protective bag 60 mm × 110 mm	
–	H25-0117-04	Protective bag 80 mm × 250 mm	

MANUALMAN
P. A. Markavage Phone (732) 238-8964
27 Walling St., Sayreville, NJ 08872-1818
Web http://www.manualman.com
e-mail manualman@juno.com
Quality Is The Number 1 Customer Priority

A product of
TRIO-KENWOOD CORPORATION
17-5, 2-chome, shibuya, shibuya-ku Tokyo 150, Japan

TRIO-KENWOOD COMMUNICATIONS
1111 West Walnut Street, Compton, California, 90220, U.S.A.
TRIO-KENWOOD COMMUNICATIONS, GmbH
D-6374 Steinbach TS, Industriestrasse 8A, West Germany
TRIO-KENWOOD ELECTRONICS, N.V.
Leuvensesteenweg 504, B-1930 Zaventem, Belgium
TRIO-KENWOOD (AUSTRALIA) PTY. LTD.
4E Woodcock Place, Lane Cove N.S.W. 2066, Australia

1983-1 PRINTED IN JAPAN B51-0981-00 (K) (M) (T) (W) (X) (G) 1700