STERLING
A KOHLER COMPANY

Lawson®

72" x 36" air massage bath

77301100

VIKRELL
MATERIAL STRENGTH. PROVEN PERFORMANCE.™

Features

- 15-1/4" soaking depth
- Reversible drain can be installed as left- or right-hand drain
- Suitable for tile-down applications
- Air Massage, three-speed blower, integrated heater, arched armrests, contoured backrest and lumbar support

DISCONTINUED

Material

- Made from solid Vikrell® material for strength, durability, and lasting beauty

Installation

- Drop-in

Recommended Products/Accessories

71317100 Tile-in flange kit for 72" soaking baths

DISCONTINUED This product has been discontinued.

Codes/Standards

ASME A112.19.7/CSA B45.10
CSA B45.5/IAPMO Z124
ASTM E162
ASTM E662
UL 1795
CSA C22.2 No. 218.2

STERLING® Vikrell® or Acrylic Baths and Shower Bases Ten-Year Limited Warranty

See website for detailed warranty information.

DISCONTINUED This product has been discontinued.

STERLING
A KOHLER COMPANY

Lawson®

72" x 36" air massage bath

77301100

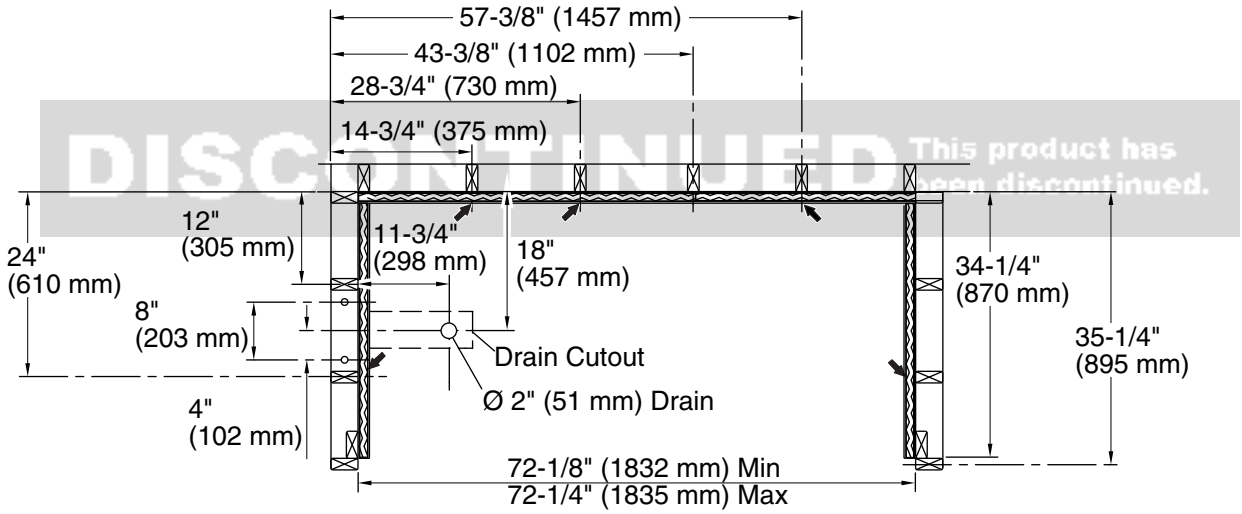

DISCONTINUED This product has been discontinued.

Ledger Strip Locations

Recommended Support Clip or Roofing Nail Location (5 Total)

Overflow Detail

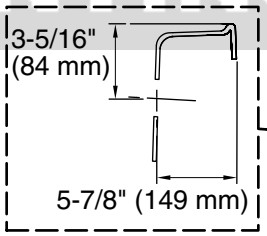

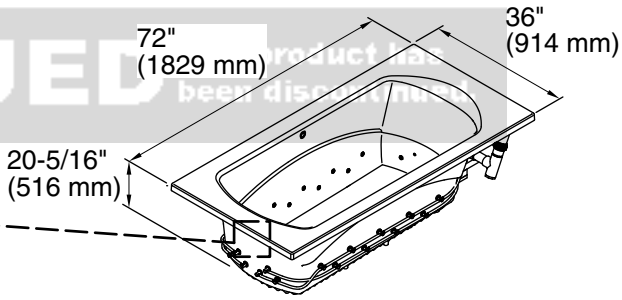

Required Electrical Service

One dedicated circuit required, protected with Class A Ground-Fault Circuit-Interrupter (GFCI). Outside North America, this device may be known as a Residual Current Device (RCD).

Blower, Heater: 120 V, 15 A, 60 Hz

Technical Information

All product dimensions are nominal.

Drain location:	Reversible
Basin area, bottom:	50-3/8" x 21-3/4" (1280 mm x 552 mm)
Basin area, top:	58-1/4" x 27" (1480 mm x 686 mm)
Weight:	83 lbs (37.6 kg)
Minimum floor load:	41 lbs/ft² (200.2 kg/m²)
Water depth:	15-1/4" (387 mm)
Water capacity:	68 gal (257.4 L)
Electrical component rating:	Blower: 120 V, 9.2 A, 60 Hz Heater: 300 W
Minimum flat for door:	3" (76 mm)

Notes

Install this product according to the installation instructions.

Provide one grounded electrical outlet within 24" (610 mm) of each component.

Size the drain cutout to fit the drain assembly that will be used.

Blower service access is required.

End stud positioning is critical if nailing-in flanges are to be used.

Studs should be positioned roughly as shown for support clip or roofing nail installation.