B85 无线充蓝牙音箱

使用B85无线充蓝牙音箱之前；请阅读使用说明书

◆ 适用范围

一.接口示意图：

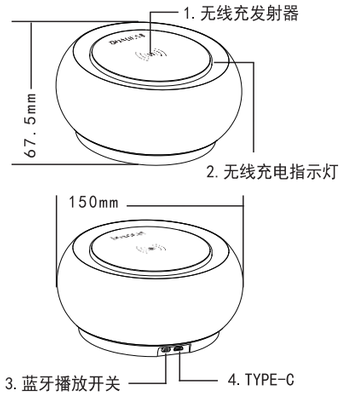

二.产品参数：

◇ 输入电压：DC 5V/3A、9V/2A、12V/1.5A
◇ 音频输出功率：5W*2
◇ 无线充功率：自适应5W/10W/15W
◇ 信噪比：≧90db
◇ 无线充电输出：5V/1A，9V/1.12A,12V/1.25A
◇ 内置锂电池：2500mAh
◇ 播放时间：4-5小时
◇ 充电时间：3-4小时

三.操作说明：

1. 将无线充蓝牙音箱连接DC的适配器或者其它移动电源设备，此时红灯亮；充满时红灯灭。
2. 将带有无线接收器的手机等设备放在无线充蓝牙音箱的无线充电面板上，手机显示充电状态。面盖蓝灯呼吸闪，充满灯灭。
3. 如果手机没有内置无线接收器，则需将手机连接无线接收板。而后再放到无线充面板上，手机显示充电状态。
4. 无线充待机时，面盖红灯常亮。

蓝牙模式播放功能：

（1）拨动蓝牙开关至ON位置，即可开起蓝牙模式，蓝灯闪烁。

（2）手机打开蓝牙，找到蓝牙名为“B85”的设备进行配对可，蓝灯2秒闪一次。

备注：电池只对蓝牙部分供电.

四.安全须知：

为防止使用过程中出现危险情况，请阅读该安全须知。

◇ 请不要在无线充过热时直接触，防止对人体造成烫伤危害。
请不要把产品放置在加热器，微波炉，电饭煲，高压锅等加热设备附近，防止造成产品过热并引发火灾。
◇ 请不要摔跌、撞击产品，避免产品出现爆炸情况。
◇ 儿童使用时，请在成人监护下确保正常操作。
◇ 请勿在低温潮湿的环境下使用，正常使用环境0-50℃。
◇ 请勿擅自拆卸，维修产品。
◇ 请勿把磁条卡片和产品放置在一起，避免出现消磁现象 。
◇ 请勿把产品放在离医疗设备20cm以内的范围，防止出现设备干扰现象。
◇ 请勿将金属磁铁等异物放置于产品无线充线圈位置上，防止出现高温对人体造成烫伤危害；
◇ 请在用本产品对您的其它设备充电前，去除被充电设备与本产品接触面的金属饰物。
◇ 在不使用的情况下，请把产品充电器从插座上拔除，避免消耗无线充使用寿命或造成损坏。

五.FCC警告：

本设备符合FCC规则。 操作符合以下两个条件：（1）该设备不会产生有害干扰，（2）本设备必须接受任何干扰，包括可能会造成不良操作的干扰因素。未经专利方许可的任何修改和变更都可能导致使用者无权使用该设备。本设备已经过测试，符合FCC规则第15页对B类数字设备的限制， 这些限制旨在住宅安装过程中对使用者遭受有害干扰提供合理的保护。该设备使用中会产生辐射射频能量，如若不按照说明指示安装和使用，会对无线通讯造成有害干扰。同时，也无法保证在特定安装中不会发生干扰 。如果该设备对无线广播或电视接收产生有害干扰，而这可以通过开关设备来控制，则鼓励用户尝试通过一个或多个以下措施来消除干扰。

- 重新定位或重新定位接收天线。
- 增加设备和接收器之间的距离。
- 将设备连接到与接收器连接的电路不同的电路插座上 。
- 咨询经销商或有经验的广播/视频技术人员以获得帮助。

该设备已经过评估，符合一般无线射频暴露要求。
该装置可以在不受限制的便携式曝光条件下使用。

B85

bluetooth speaker WITH wireless charger

Please read the user manual before using B85 bluetooth speaker with wireless charger

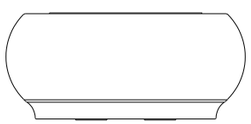

◆ *Range of Application*

Product Illustration

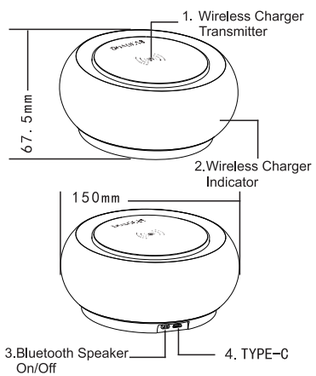

Product Parameters

1. Input voltage：DC5V/3A、9V/2A、12V/1.5A
2. Audio output power：5W*2
3. Wireless charging power：AUTO 5W/10W/15W
4. SNR：≧ 90db
5. Wireless charging output：5V/1A,9V/1.12A,12V/1.25A
6. Built-in lithium battery：2500mAh
7. Playback time：about4-5hours
8. Charging time：about 3-4hours

Instructions

1. The red light is on when connect the wireless charging bluetooth speaker to the DC adapter or other mobile power device. The red light goes out when fully charged
2. Place the mobile phone or other mobile devices with wireless receiver on the wireless charging panel of the wireless charging bluetooth speaker, and the mobile devices displays the charging status.
3. If the mobile phone does not have a built-in wireless receiver, you need to connect the phone to a wireless receiver board. Then put it on the wireless charging panel, the mobile phone displays the charging status
4. When the wireless charger is charging the mobile phone, the red light is always on.

Play the Music In Bluetooth Speaker Mode:

1. Shift the Bluetooth speaker On/Off button to on option to begin the bluetooth speaker mode.
2. Open the bluetooth function on mobile phone to search the bluetooth name “B85” to pair, then begin playing music.

Safety Information

Please read the safety instructions to preventing from any dangerous situations when using the product.

◇ Please do not directly touch the over-heated panel of the product, just in case any burn hazard.
◇ Please do not place the product, closing to heater, microwave oven, rice cooker, pressure cooker and other heating devices, to prevent the product from overheating and any risks of fire.
◇ Please do not violently drop or hit the product to avoid explosions of the product.
◇ Please ensure normal operation under adult supervision when the product being used by children.
◇ Please do not use the product in low temperature and humid environment, the normal operational environment is 0-50°C.
◇ Please do not personally disassemble and repair the product.
◇ Please do not place the magnetic cards with the product to prevent from demagnetization.
◇ Please do not place the product with medical equipment in 20 cm to prevent device interference.
◇ Do not place foreign objects such as metal magnets on the wireless charging coil of the product to prevent high temperature from causing burns.
◇ Before using this product to charge your other devices, please remove the metal ornaments on the contact surface of the charged device and this product.
◇ When not in use, please unplug the product charger from the socket to avoid consuming the life of the wireless charger or causing damage.

FCC Warning

This device complies with part 15 of the FCC rules. Operation is subject to the following two conditions:
a) The device may not cause harmful interference.
b) The device must accept,any interference received, including interference that may cause undesired operation. Any changes or modifications not expressly approved by the party responsible for compliance could void the user's authority to operate the equipment. This equipment has been tested and found to comply with the limits for a class B digital device, pursuant to part 15 of the FCC rules.
These limits are designed to provide reasonable protection against harmful interference in a residential installation. This equipment generates uses and can radiate radio frequency energy and, if not installed and used in accordance with the instructions, may cause harmful I nterference to radio communications. However, there is no guarantee that interference will not occur in a particular installation. If this equipment does cause harmful interference to radio or television reception, which can be determined by turning the equipment off and on, the user is encouraged to try to correct the interference by one or more of the following measures:

-Reorient or relocate the receiving antenna.
-Increase the separation between the equipment and receiver.
-Connect the equipment into an outlet on a circuit different from that to which the receiver is connected.
-Consult the dealer or an experienced radio/TV technician for help.The device has been evaluated to meet general RF exposure requirement. The device can be used in portable exposure condition without restriction.