UISP Wave Nano

a

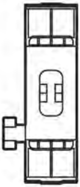
b

c

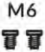

d

e

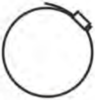
f

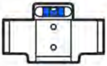
g

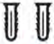
h

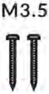

i

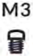

j

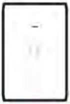
k

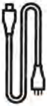
l

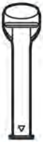
m

1

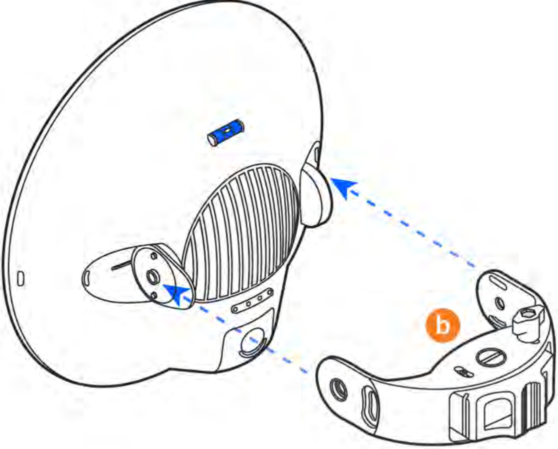

2

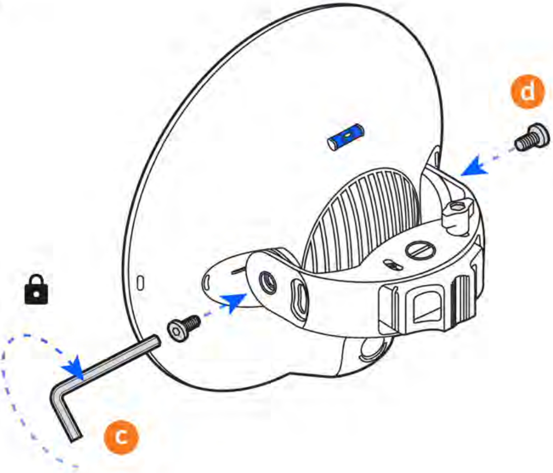

3

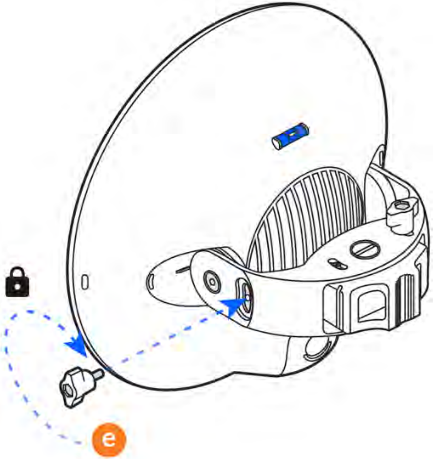

4

A

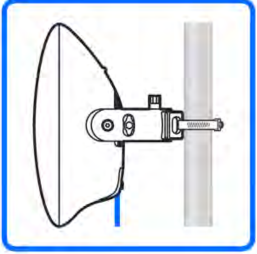

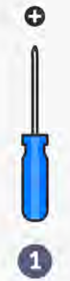

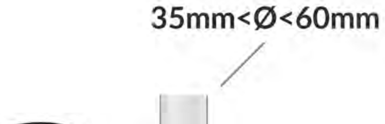

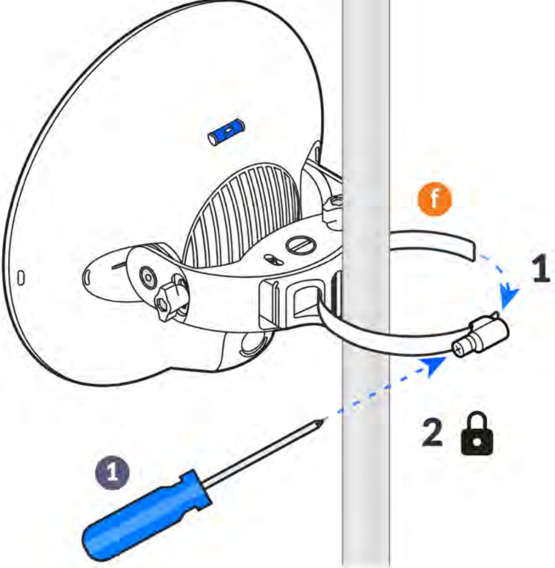

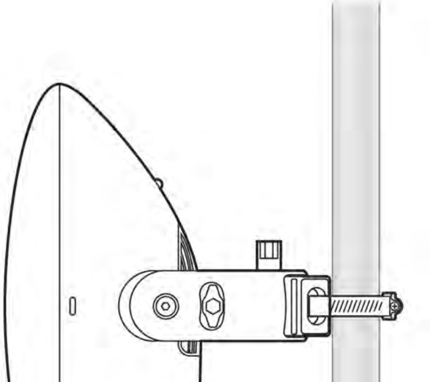

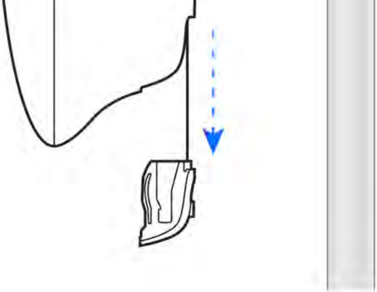

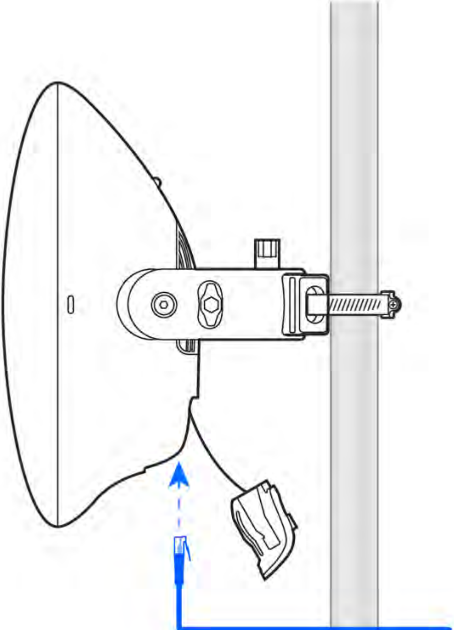

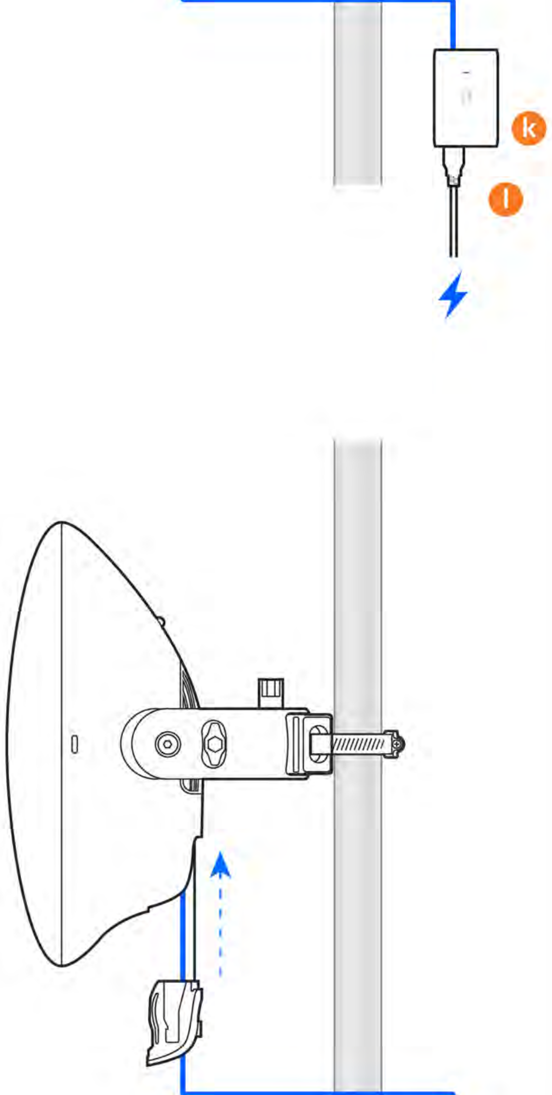

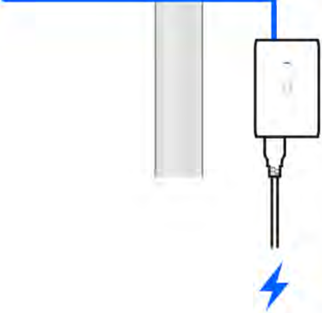

B

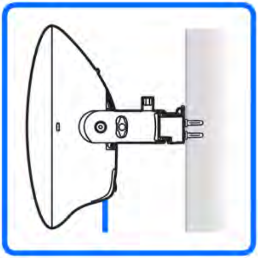

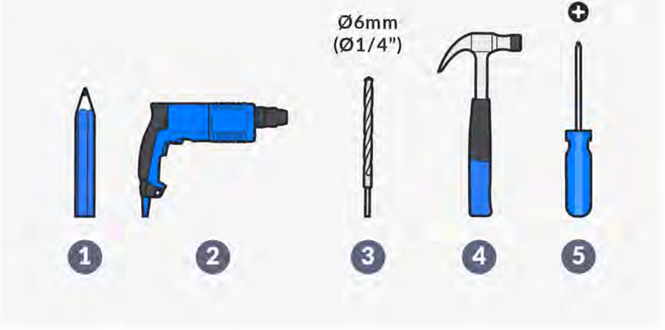
Ø6mm
(Ø1/4")
1
2
3
4
5

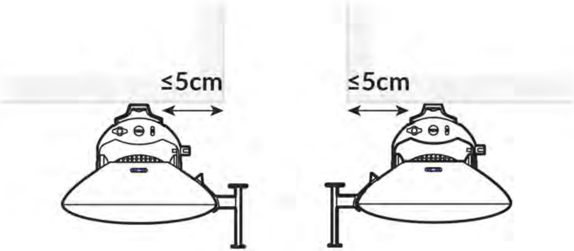

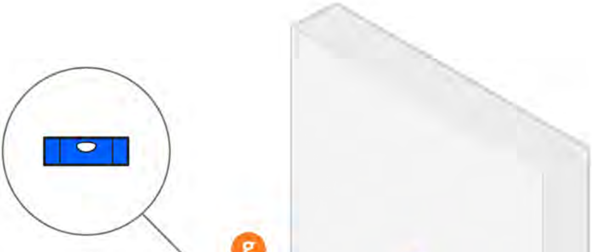

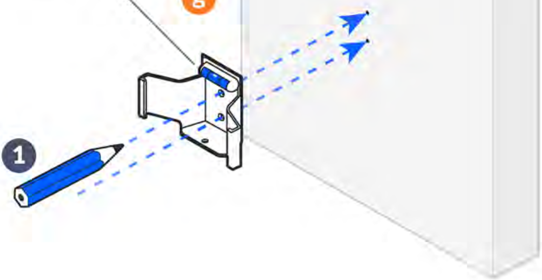

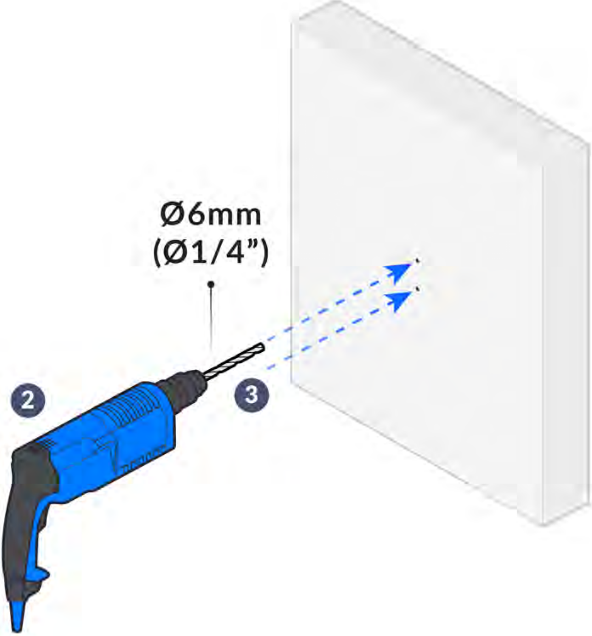

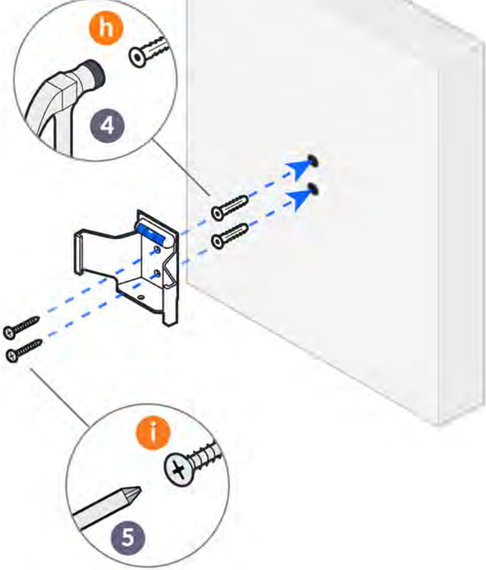

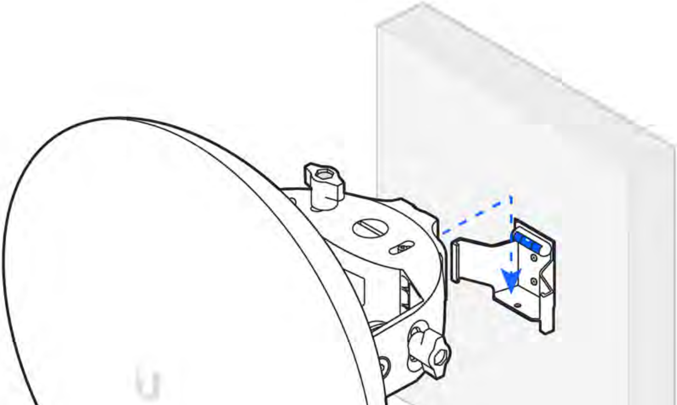

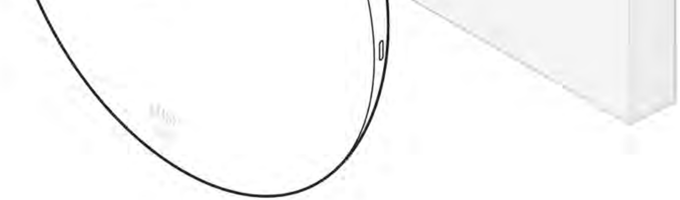

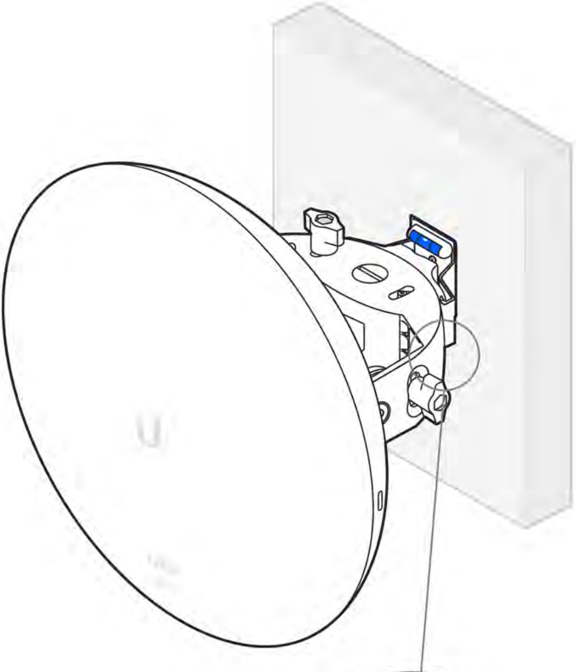

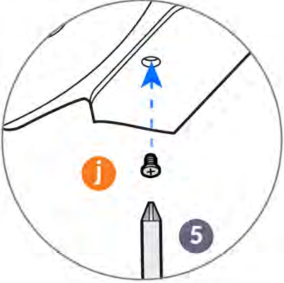

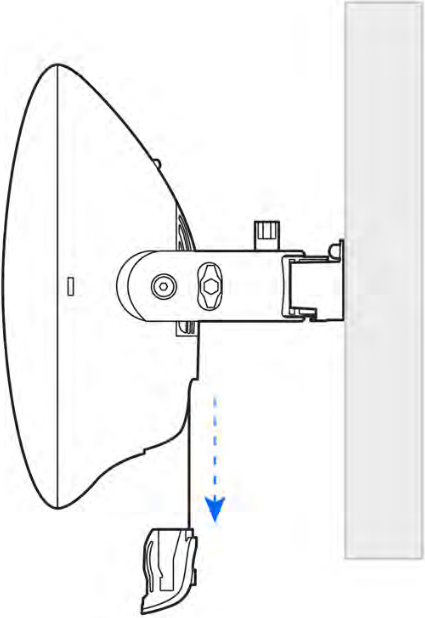

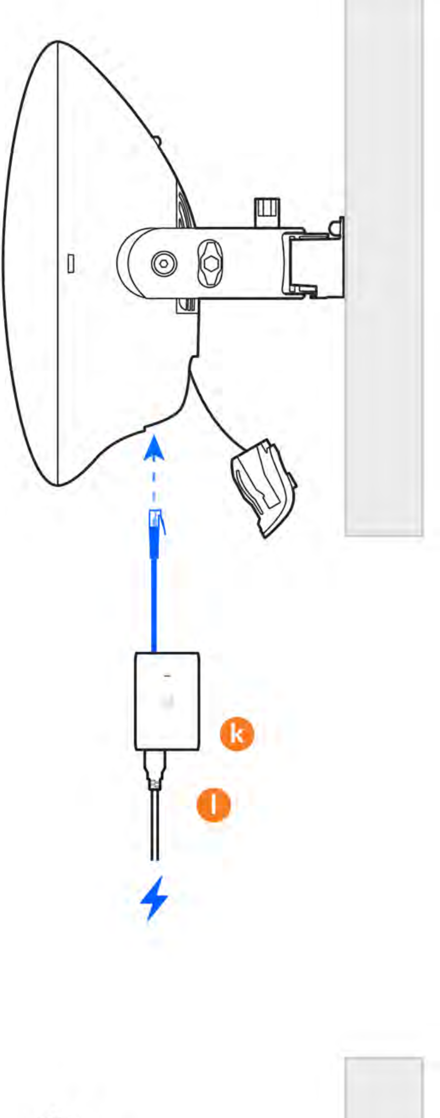

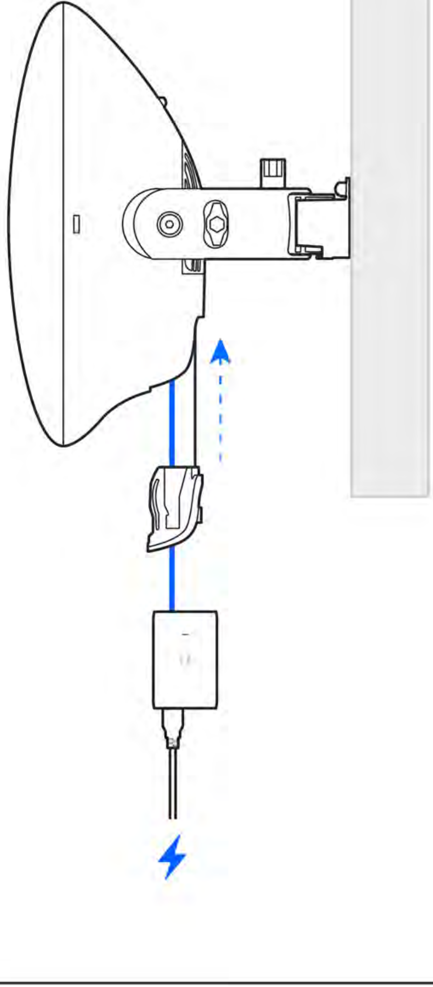

5

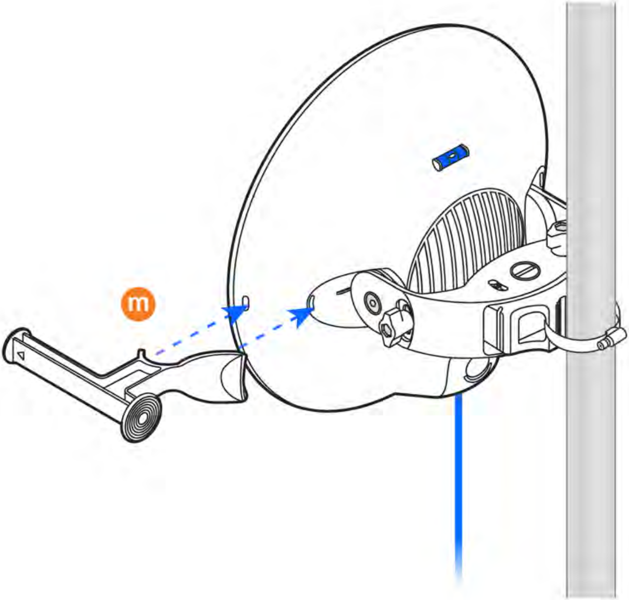

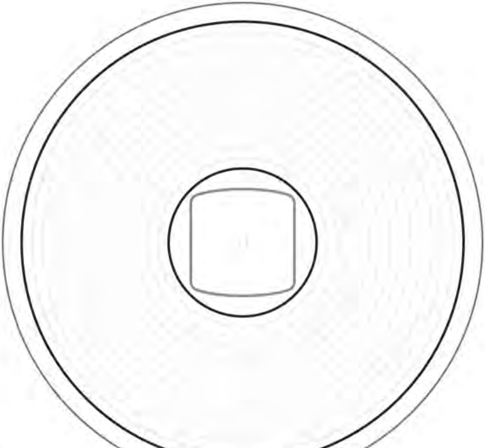

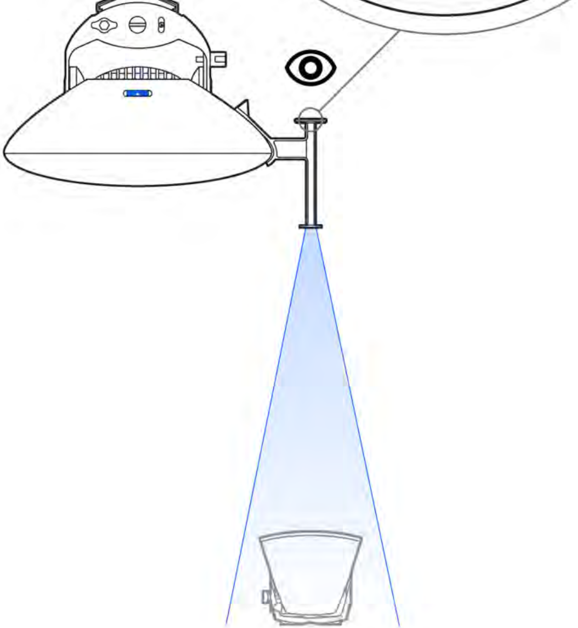

6

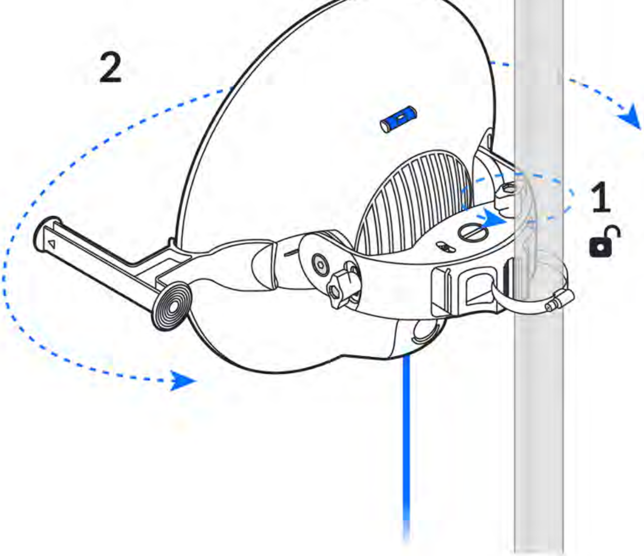

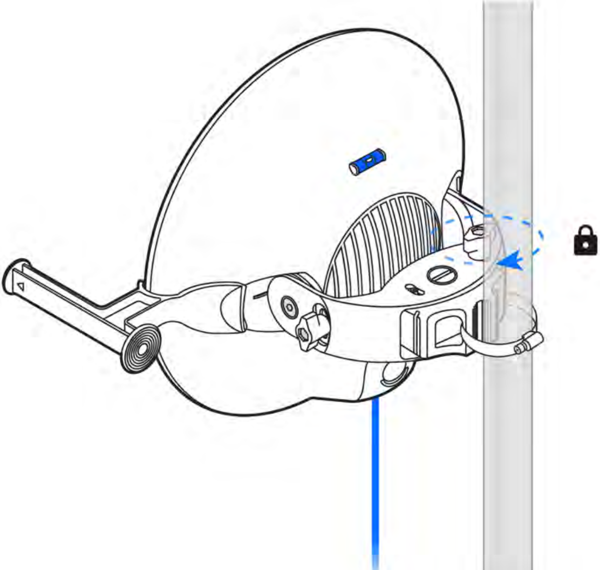

7

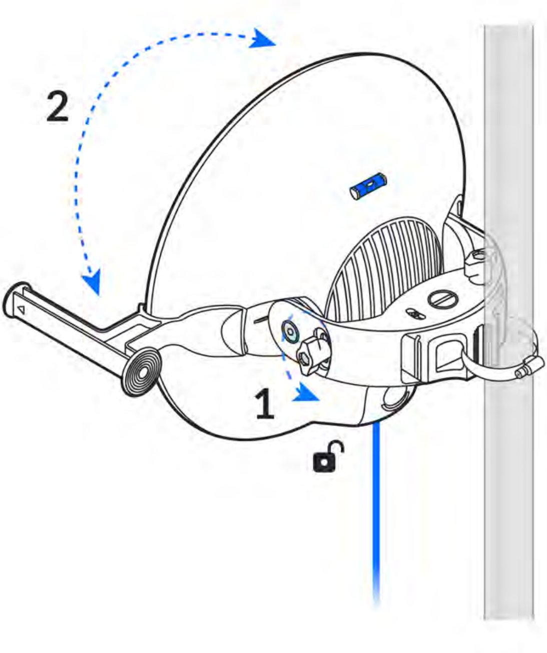

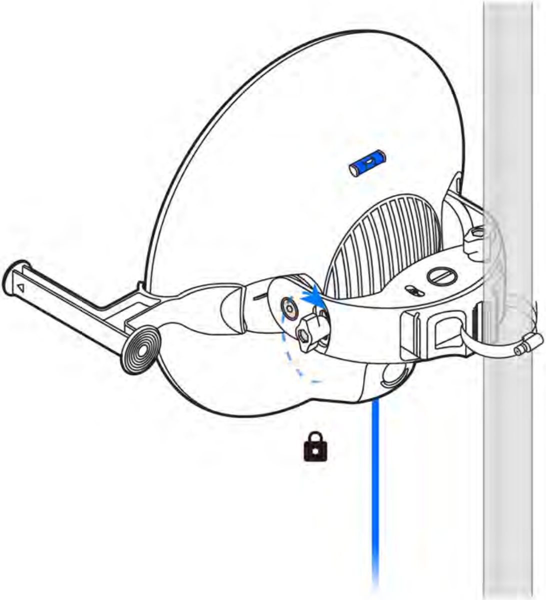

8

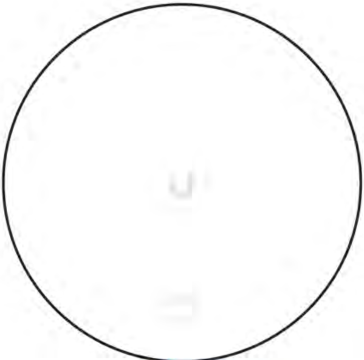

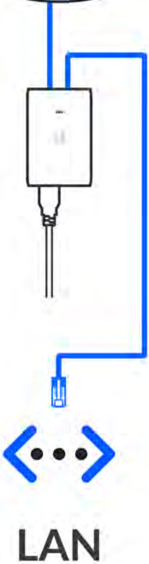

9

Download on the
App Store

GET IT ON
Google Play

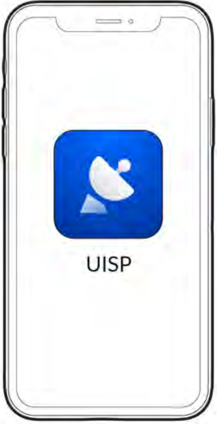

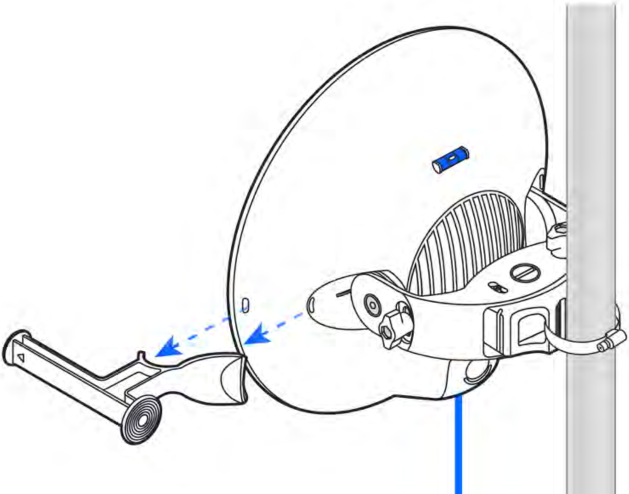

Get Answers
help.ui.com

UI Support

[illegible]