Assembly and servicing instructions
for the installer

VIESSMANN

VITOCAL 100-A Inertial tank

6167566 9/2020

INDEX

1 PURPOSE AND CONTENTS OF THE MANUAL ... 3
1.1 HOW TO KEEP THE MANUAL ... 3
1.2 GRAPHIC SYMBOLS USED IN THE MANUAL ... 3
2 NORMATIVE REFERENCES ... 3
3 PERMITTED USE ... 3
4 GENERAL SAFETY GUIDELINES ... 4
4.1 WORKERS' HEALTH AND SAFETY ... 4
4.2 PERSONAL PROTECTIVE EQUIPMENT ... 4
4.3 SAFETY SIGNS ... 5
5 TECHNICAL CHARACTERISTICS ... 5
5.1 FRAMEWORK ... 5
5.2 STORAGE TANK ... 5
5.3 CONNECTION JOINT BETWEEN ACT AND VITOCAL 100-A UNITS ... 5
5.4 ANTI-VIBRATION DAMPERS ... 6
6 AVAILABLE VERSIONS ... 6
6.1 FACTORY-FITTED OPTIONAL ACCESSORIES ... 7
6.1.1 EXPANSION VESSEL KIT ... 7
6.1.2 ELECTRIC HEATER KIT ... 7
7 INSTALLATION ... 12
7.1 GENERAL ... 12
7.2 LIFTING AND HANDLING ... 12
7.3 POSITIONING AND MINIMUM TECHNICAL CLEARANCES ... 12
7.4 INSTALLATION ... 13
7.5 PLUMBING CONNECTIONS ... 14
7.5.1 Plumbing connections between Vitocal 100-A and ACT ... 14
7.5.2 Service valve ... 15
7.5.3 Discharge of the plant ... 15
7.5.4 Condensate drainage of Vitocal 100-A unit ... 15
7.5.5 Removal of the panels for inspection and maintenance ... 15
8 START-UP ... 16
9 SHUTDOWNS FOR LONG PERIODS ... 16
10 MAINTENANCE AND PERIODIC CHECKS ... 17
11 DECOMMISSIONING ... 17
12 TECHNICAL DATA ... 18
12.1 PRESSURE DROPS ... 18
13 DIMENSIONS ... 19
13.1 DIMENSIONS ... 19
13.2 FOOTPRINT WITH VARIOUS SIZES OF VITOCAL 100-A ... 20
13.2.1 Footprint with Vitocal 100-A ranges ... 20
14 TYPICAL PLUMBING CONNECTION ... 21
15 HANDBOOK FOR INSTALLATION CONFIGURATION ... 21

The manual of the ACT units contains all the necessary information for the ideal use of the equipment under safety conditions for the operato.

1 PURPOSE AND CONTENTS OF THE MANUAL

This manual provides basic information as to the selection, installation, operation and maintenance of the ACT storage tanks. It is intended for the operators of the appliance and it enables them to use the equipment efficiently, even if they do not have any previous specific knowledge.
This manual describes the characteristics of the unit at the time in which it was put on the market. It must therefore be considered appropriate with respect to any subsequent technological improvements introduced by the company as part of its constant endeavour for enhancing the performance, ergonomics, safety and functionality of its products.
The company, therefore, is not constrained to update the manuals for previous versions of machines.
The user is recommended to follow the instructions contained in this booklet, especially those concerning safety and routine maintenance.

1.1 HOW TO KEEP THE MANUAL

The manual has to always be kept together with the unit it refers to. It has to be stored in a safe place, away from dust and moisture. It must be accessible to all users who shall consult it any time they are in doubt on how to operate the equipment.
The company reserves the right to modify its products and related manuals without necessarily updating previous versions of the reference material. We also decline any responsibility for possible inaccuracies in the manual if due to printing or transcription errors.
The customer shall store any updated copy of the manual or parts of it delivered by the manufacturer as an attachment to this manual.
The company is available to give any detailed information about this manual and to give information regarding the use and the maintenance of its own units.

1.2 GRAPHIC SYMBOLS USED IN THE MANUAL

⚠	***Indicates operations that can be dangerous for people and/or disrupt the correct operation of the unit***
⊘	***Indicates prohibited operations.***
ℹ	***Indicates important information that the operator has to follow in order to guarantee the correct operation of the unit in complete safety.***

2 NORMATIVE REFERENCES

ACT units have been designed in compliance with the following directives and harmonized standards:

- 2014/35/EU, 2014/30/EU, 2011/65/EU, 2012/19/EU Community Directives
- UNI EN 378-1, 378-2, UNI EN 12735-1 standards
- IEC EN 60335-2-21 standard
- IEC EN 55014-1, IEC EN 55014-2, IEC EN 61000-3-2, IEC EN 61000-3-3, IEC EN 62233 standards
- EN 50581 standard

3 PERMITTED USE

- The company excludes any contractual and extra contractual liability for damage caused to persons, animals or objects, by incorrect installation, setting and maintenance, improper use of the equipment, and the partial or superficial reading of the information contained in this manual.
- These units have been designed only for technical water storage used for heating and cooling plants. Any other use not expressly authorised by the manufacturer is considered improper and therefore not allowed.
- The installation place and the plumbing system must be established by the system designer and must take into account technical requirements as well as any applicable local laws and specific authorisations.

- All the work must be executed by skilled and qualified personnel, competent on the existing regulations in different countries.
- The appliance may be used by children at least 8 years old and by persons with reduced physical, sensory or mental capabilities or without experience or the necessary knowledge as long as they are supervised or after they themselves have received instructions on the safe use of the appliance and understand the relevant dangers. Children must not play with the appliance. The cleaning and maintenance which the user is expected to carry out on the unit cannot be done by children without supervision.

4 GENERAL SAFETY GUIDELINES

Before beginning to operate on ACT units, the operator has to perfectly know and have read and understood the information in this manual.

	It is strictly forbidden to remove and/or to tamper with any safety device.
	Children or unassisted disabled persons are not allowed to use the appliance.
	Do not touch the appliance when barefoot or parts of the body are wet or damp.
	Do not step on, sit down on and/or place any type of object on the appliance.
	Do not spray or pour water directly on the unit.
	Do not dispose of, abandon or leave within reach of children packaging materials (cardboard, staples, plastic bags, etc.) as they may represent a hazard.
	Any routine or extraordinary maintenance operation shall be carried out when the inertial tank is discharged and disconnected from the plant.
	Maintenance personnel must receive suitable training for the performance of their tasks in safety.
	Operators must know how to use personal protective equipment and the accident-prevention rules of national and international laws and regulations.

4.1 WORKERS' HEALTH AND SAFETY

We recall that the European Union has issued some directives regarding the safety and health of workers, including: 89/391/EEC, 89/686/EEC, 89/655/EEC, 86/188/EEC and 77/576/EEC which every employer is obliged to follow and have followed. We observe therefore that:

	Do not tamper with or replace parts of the unit without the specific consent of the manufacturer. The manufacturer shall have no responsibility whatsoever in case of unauthorised operations.
	Using components, consumables or spare parts that do not correspond to those recommended by the manufacturer and/or listed in this manual may be dangerous for the operators and/or damage the unit.
	The operator's workplace has to be kept clean, tidy and clear of objects that may hinder free movement. Appropriate lighting of the work place shall be provided so as to allow the operator to carry out the required operations safely. Poor or excessive lighting can cause risks.
	Ensure that work places are always adequately ventilated and that the extraction systems are working, in good condition and in compliance with the requirements of the laws in force.

4.2 PERSONAL PROTECTIVE EQUIPMENT

When operating and maintaining the ACT units, it is necessary to use the following personal protective equipment:

	Clothing: Maintenance technicians and operators must wear protective clothing that complies with the basic safety requirements currently in force. In case of slippery floors, they must also wear safety shoes with non-slip soles.
	Gloves: During maintenance or cleaning operations, appropriate protective gloves must be used.
	Mask and goggles: Respiratory protection (mask) and eye protection (goggles) should be used during cleaning operations.

4.3 SAFETY SIGNS

The unit features the following safety signs, which must be complied with:

	Read the manual carefully
	Electrical risks
INGRESSO ALIMENTAZIONE ELETTRICA POWER SUPPLY INLET SPANNUNGSVERSORGUNG ENTREE ALINENTATION ELECTRIQUE	***Safety power supply input***

5 TECHNICAL CHARACTERISTICS

The storage tanks for technical water have been designed for residential applications for stabilising the primary circuit. They are set up to operate in conjunction with our Vitocal 100-A heat pumps which can be properly mounted on the unit thanks to the appropriate fasteners. Isolation from vibrations is assured by the supplied anti-vibration supports to be installed between the storage tank and the heat pump. All water tanks are properly insulated with thermal insulation material with a thickness of 50mm.
There are also: the connections to insert any expansion vessel, which can be easily installed inside the structure without the need for additional spaces, and connections to add an electric heater for technical water heating. In addition, each model is supplied with a charge/discharge valve for easier maintenance and cleaning operations.

5.1 FRAMEWORK

All the external panels of ACT units are made up of hot-galvanised sheet metal; most of them are painted with polyurethane powder enamels at 180°C. The frame is self-supporting with two removable panels for easier inspection, maintenance of the inner parts and of any installed kits. All screws and rivets for outdoor installation are in galvanised steel.

	The colour of ACT units is the same as the painting of Vitocal 100-A units.

5.2 STORAGE TANK

The water tanks are made of steel coated with insulation material 50mm thick, in order to get high efficiency to maintain the temperature of the stored technical water.

5.3 CONNECTION JOINT BETWEEN ACT AND Vitocal 100-A UNITS

An extendable-flexible fitting is provided for the connection between the water tank and the heat pump which should be mounted on top of the storage tank. Use the supplied appropriate elbow fitting for the connection between ACT unit and the extendable pipe. In addition it is recommended to insulate the pipe with suitable protective material. For any other type of connection, it is recommended to use a flexible pipe in order to avoid vibrations between the two units. See Chapter 0 for the installation references.	

5.4 ANTI-VIBRATION DAMPERS

Each unit is supplied with 6 anti-vibration dampers, with appropriate protection washers (the plastic ones come into contact with the unit support) which must be installed between the Vitocal 100-A unit and ACT in order to isolate the storage tank from vibrations. 4 vibration dampers are required for installation. For the installation, please refer to chapter 7.4	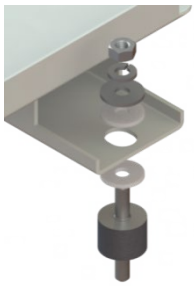

6 AVAILABLE VERSIONS

The ACT technical water tank is available in three different capacities: 50 litres, 75 litres and 95 litres with two factory-fitted accessory versions.
The code of the unit is composed of:

- ✓ 6 fixed digits (the first two digits identify the ACT series in any customisations)
- ✓ the symbol # as separator
- ✓ 7 variable digits (fields) which identify the sizes, factory-fitted accessories and any accessories
- ✓ 2 fixed digits equal to 0, currently not used
- ✓ 2 variable digits (MC field) which identify the ACT series in any customisations (the MC field consists of two digits)

011960#(VS)(RE)(KI)00(MC)

MAIN CODE	SIZE		FACTORY-FITTED ACCESSORIES			
011960#	VS		RE		KI	
	Tank volume		Electric heater output		Expansion vessel kit	
	00	50 litres				
	01	75 litres				
	02	95 litres				
			00	Without electric heater		
			05	2 kW single-phase electric heater		
			06	3 kW single-phase electric heater		
			07	4.5 kW single-phase electric heater		
			08	2 kW three-phase electric heater		
			09	3 kW three-phase electric heater		
			10	4.5 kW three-phase electric heater		
			31	1.2 kW single-phase electric heater		
					0	Without expansion vessel
					1	With expansion vessel

Below is a brief description of the various available options.

Field	Variant	Description
VS	00, 01, 02	Nominal volume (capacity) of the tank
RE	00, 05, 06, 07, 08, 09, 10, 31	Auxiliary electric heater
KI	0	The ACT tank is not equipped with the expansion vessel
	1	The addition of the expansion vessel (18 litres) within the structure allows to reduce the dimensions

CODE OF OPTIONAL ACCESSORIES	Description
7733675	Antifreeze kit to protect the Vitocal 100-A unit and the circuit.

IMPORTANT

ONLY OPTIONAL ACCESSORIES CAN BE REQUESTED AFTER ORDERING THE UNIT, WHILE FACTORY-FITTED ACCESSORIES CANNOT BE REQUESTED AFTER ORDERING THE UNIT.

Three optional kits are available according to specific needs. All kits, if not factory-fitted, can be provided separately and should be mounted by the installer. All the characteristics and any necessary procedures for correct installation are provided in the following paragraphs.

6.1 FACTORY-FITTED OPTIONAL ACCESSORIES

6.1.1 EXPANSION VESSEL KIT

The expansion vessel is placed in the structure of the water tank and the kit includes: 18l expansion vessel, support, and connection pipe.

When installing the expansion vessel kit, the provided filling/drain valve is connected in its proper housing in the connecting pipe between the water tank and the expansion vessel.

CAUTION: The pressure of the expansion vessel of the Vitocal 100-A unit coupled with the storage tank should be reduced to 1.5bar.

The expansion vessel kit is placed in the ACT structure with:

- Supporting plate
- A pipe which connects ACT with the expansion vessel coupling
- The filling/drain valve in its new position

Before start-up ensure you have reduced the pressure of the expansion vessel of the Vitocal 100-A unit to 1.5bar.

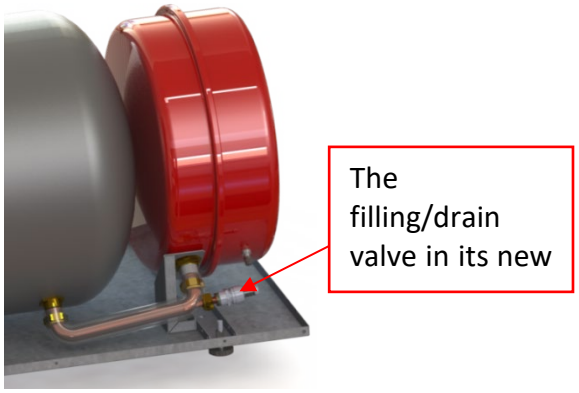

6.1.2 ELECTRIC HEATER KIT

The storage tank can be integrated with an electric kit consisting of an electric heater, a probe thermowell and 2 electric panels containing: terminals, thermostats and a sensing bulb to insert into the thermowell of the probe. All components should be fixed with a proper support that enables you to place the kit correctly in the structure of the water tank. Two cable glands to connect the kit to the Vitocal 100-A unit are also set up on the outer sheet plates.

6.1.2.1 ELECTRICAL CONNECTIONS

Check that the power supply matches the unit's electric nominal data (voltage, phases, frequency). The electric power connections must be made in accordance to the wiring diagram enclosed with the unit and in conformity with national and international standards (providing general circuit breaker, residual current devices for each line, proper earthing of the plant, etc.). Power cables, electric protections and line fuses must be sized according to the specifications listed in the wiring diagram enclosed with the unit and in the electrical data contained in the table of technical characteristics

The connections must be respected as shown in the wiring diagram:

- Signal wire **AEH** coming out from cable gland 1, must be connected to terminal **X-6.1** located inside the Vitocal 100-A unit.
- The power cable exiting the cable gland 2 must be connected to the mains power supply. It is necessary to install a suitable protective device and power disconnector, with delayed characteristic curve, with at least 3 mm contact opening and adequate breaking capacity and residual current protection.

The electric kit can be installed rapidly:

- Make sure that all the connected units are turned off and disconnected from the system
- Carry out all connections according to the instructions related to the electrical wiring
- Set the parameters as indicated in the specific section in the manual of the Vitocal 100-A unit.

NOTE: In the case of the 1.2kW electric heater kit, there is no second electric panel and no thermowell

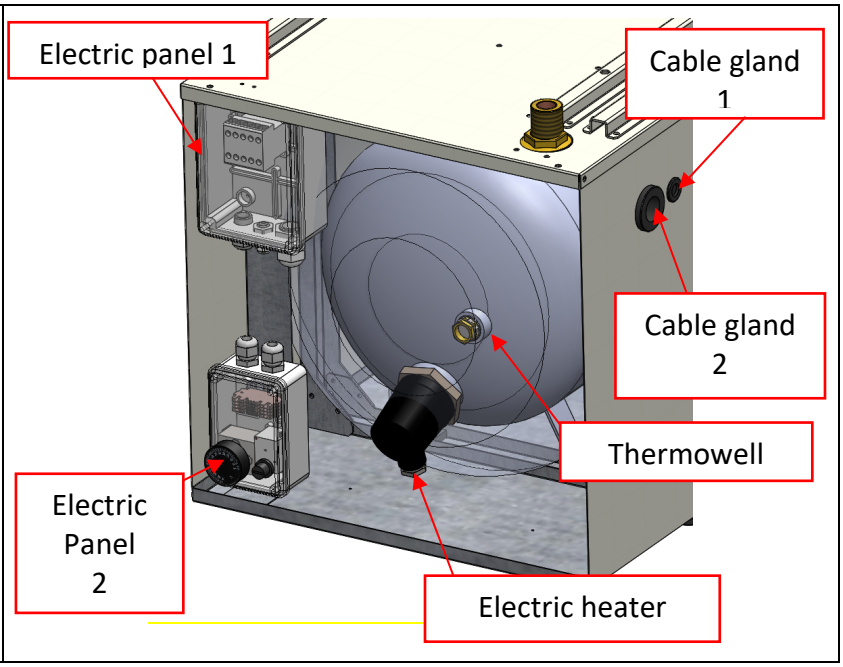

	Set the parameters as indicated in the Vitocal 100-A unit manual.
	All the installation jobs and electric wiring should be done <u>WHEN THE UNIT IS OFF AND DISCONNECTED FROM THE PLANT</u>
	Some units prior to the design of the ACT may require specific parameter settings, and these are not reported in the supplied manuals. For these requirements, our AFTERSALES department is ready to provide the necessary assistance.
	<u>CAUTION: The electrical wiring to the terminal blocks has to be done only by qualified personnel.</u>
	The power supply has to respect the listed limits: failing this, the warranty will terminate immediately. Before beginning any type of operation, make sure that power is disconnected. Connect the conductors in order: phase, neutral and earth.
	The supply voltage's fluctuations cannot exceed ±10% of the nominal value. If this tolerance should not be respected, please contact our technical department.
	Install upstream of each unit a suitable protective device and power disconnector, with delayed characteristic curve, with at least 3 mm contact opening and adequate breaking capacity and residual current protection. ***Effective earthing is mandatory; the manufacturer is not responsible for damage caused in case of lack thereof.*** ***Use cables that meet the regulations in force in the different countries.***
	Avoid direct contact with the pipes

6.1.2.2 ELECTRIC PANEL 1 FOR ACT WITH 2 –3 – 4.5 kW HEATERS – SAFETY THERMOSTATS

A. Manual reset thermostat:

- Opening 90±5°C;
- Manual reset: Remove the front panel, unscrew the plug of the casing on the thermostats box, press the red button with a suitable tool, and replace the plug.

B. Automatic thermostat:

- Opening 70±4°C;
- Differential 5±3.5°C.

(CAUTION: Adjustment knob of the tripping threshold of the automatic thermostat with factory setting (other values can endanger the proper operation of the unit)

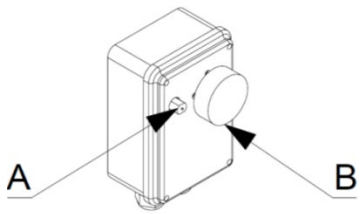

6.1.2.3 ELECTRIC PANEL 2 FOR ACT WITH 2 –3 – 4.5 kW HEATERS

The electric panel 2 is composed of:

- A contactor to control the power supply of the electric heater;
- Three fuses for the protection of the electrical circuit.

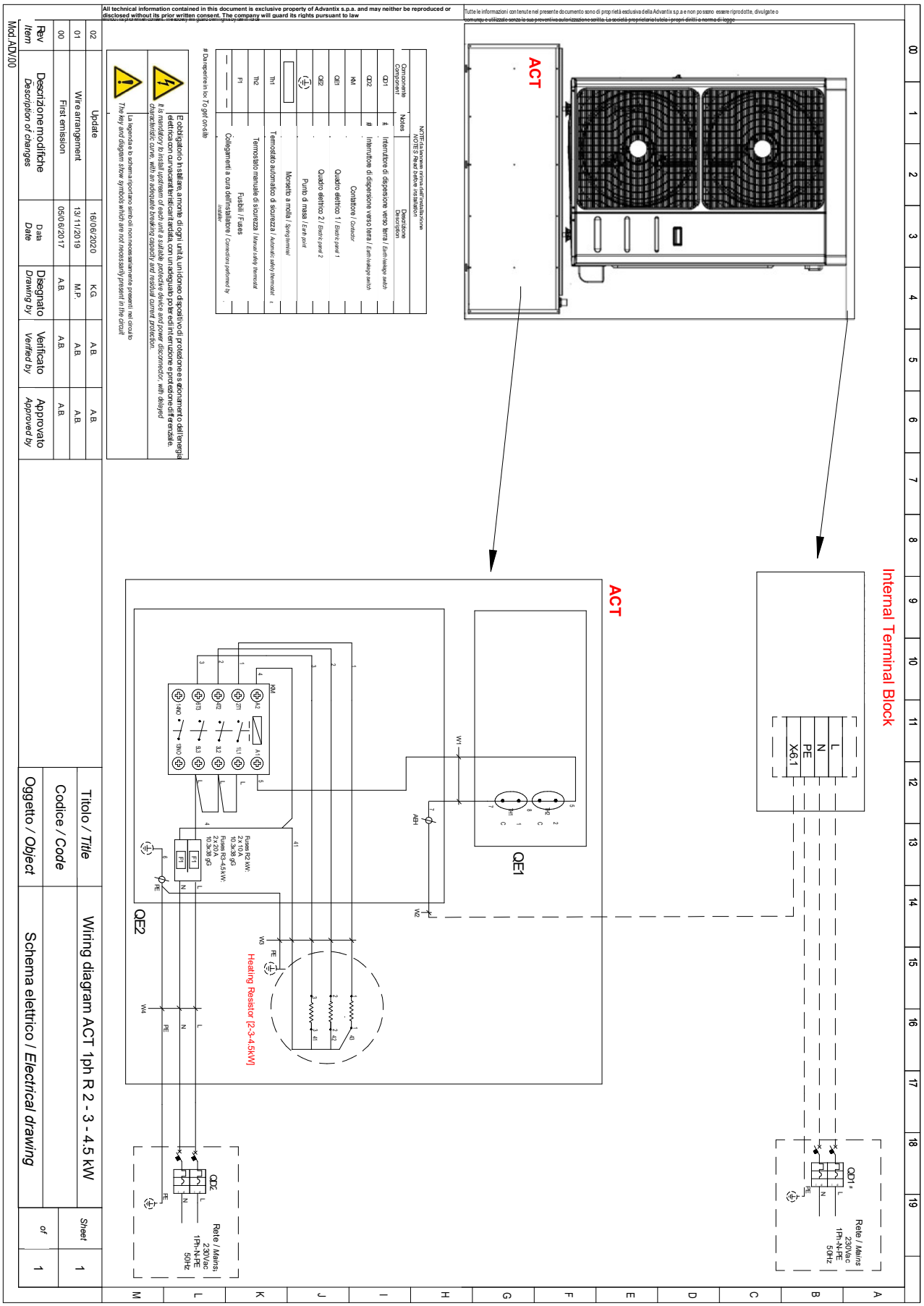

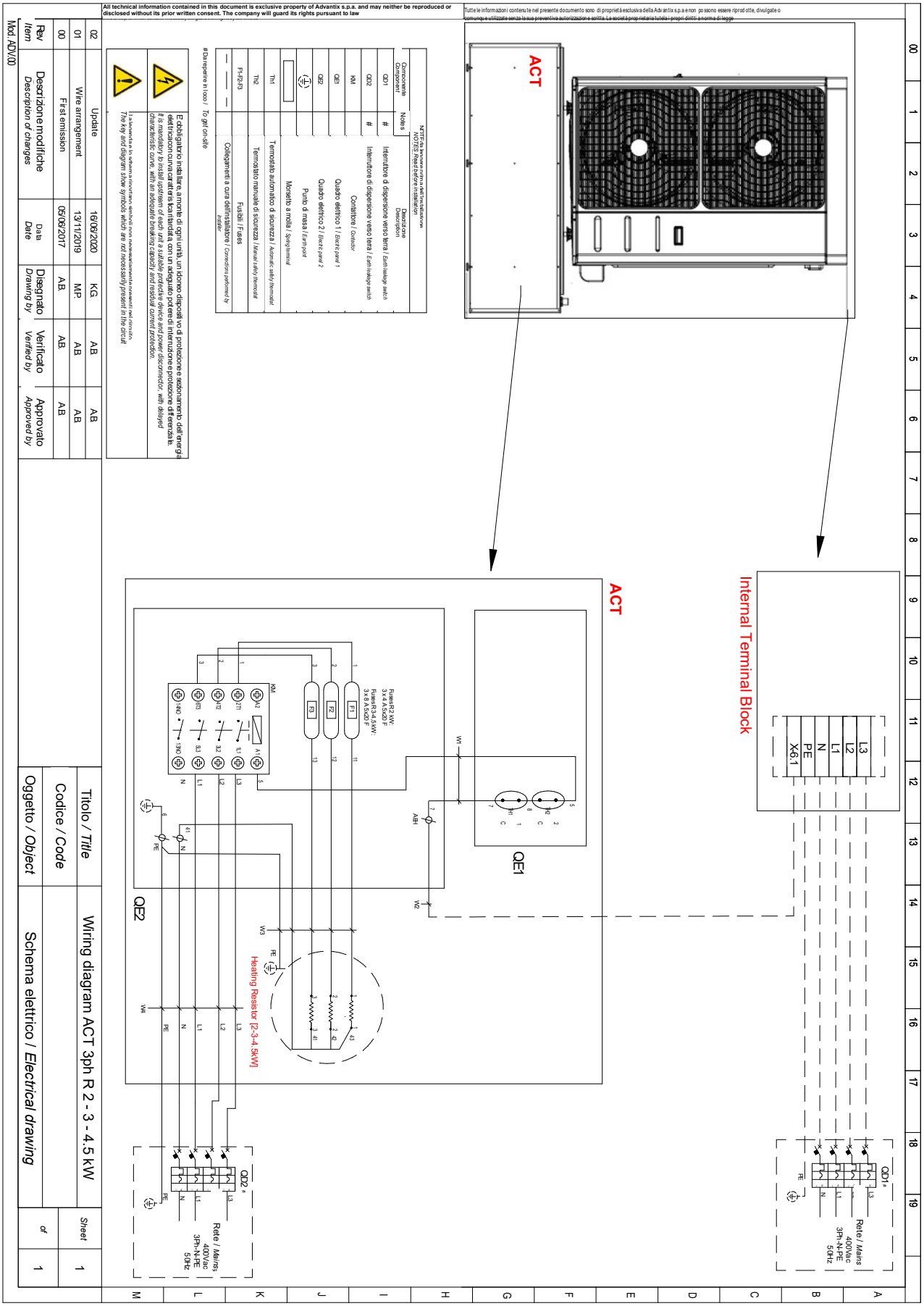
ACT
Internal Terminal Block
L3
L2
L1
N
PE
X6.1
QD1
Rete / Mains
400Vac
3Ph-N-PE
50Hz
QE1
QE2
Heating Resistor [2-3-4.5kW]
QD2
Titolo / Title
Wiring diagram ACT 3ph R 2 - 3 - 4.5 kW
Codice / Code
Oggetto / Object
Schema elettrico / Electrical drawing
Sheet
1
of
1
Mod. ADV.00

6.1.2.4 ELECTRIC PANEL FOR ACT WITH 1.2 kW HEATERS

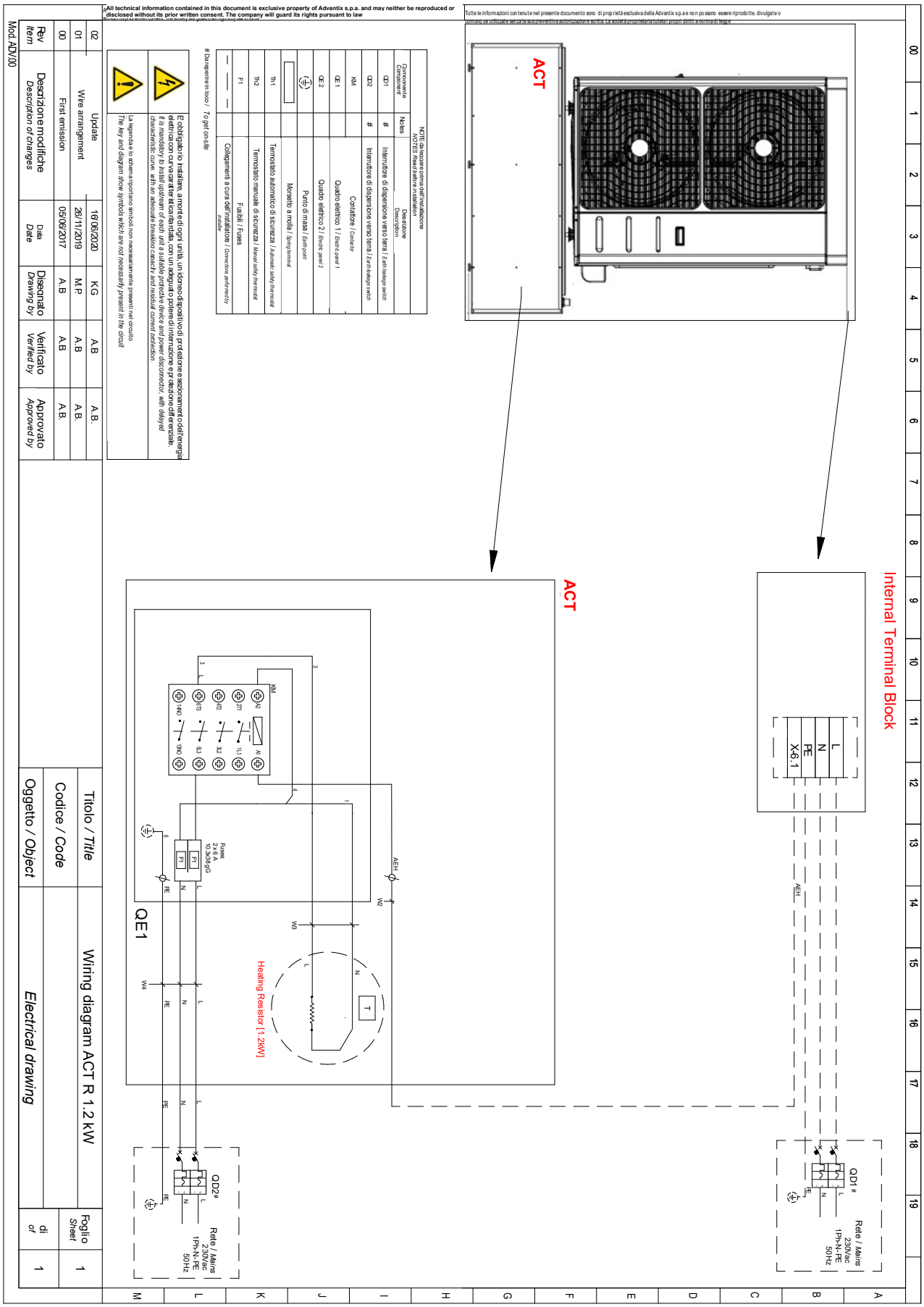

7 INSTALLATION

⚠	***CAUTION: All the operation described below must be done by QUALIFIED PERSONNEL ONLY. Before any operation on the unit, make sure that the electric power supply of all the devices on which they must operate is disconnected.***

7.1 GENERAL

When installing the unit, it is necessary to strictly follow the rules listed in this manual, to observe all the indications and however to take all possible precautions. Failure to comply with the rules reported on this manual can create dangerous situations.

ℹ	***After receiving the unit, immediately check its integrity. The unit left the factory in perfect condition; any damage must be immediately reported to the carrier and recorded on the Delivery Note before signing it.***

The company must be informed, within 8 days, of the extent of the damage. The Customer should prepare a written statement of any severe damage.

⚠	***CAUTION: The units are designed for outdoor installation. The installation place must be without any fire risks. Therefore all the necessary measures should be adopted in order to prevent the risk of fire at the installation place. The outside temperature must never exceed 46°C. Beyond this value, the unit is no longer covered by the current regulations in the field of safety of pressure equipment.***
⚠	***CAUTION: The unit must be installed so as to allow free movement for repair and maintenance operations. The warranty does not cover costs for platforms or other lifting equipment needed for any interventions.***
⚠	***All the maintenance operations and tests must be done by QUALIFIED PERSONNEL ONLY.***
⚠	***After the maintenance operations, close the panels by fixing them with screws.***

7.2 LIFTING AND HANDLING

During unloading and positioning of the unit, utmost care must be taken to avoid abrupt or violent manoeuvres in order to protect the internal electronic components. The units can be lifted by means of a forklift or, in alternative, with belts, being sure not to damage the side panels and the cover. It is important to keep the unit horizontal during these operations.	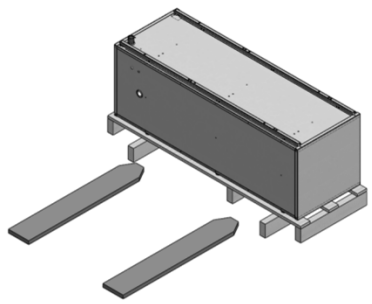

7.3 POSITIONING AND MINIMUM TECHNICAL CLEARANCES

All the models of the ACT series are designed and built for outdoor installation; for installation, you should follow the recommended placement and minimum technical clearances given in the table. It is advisable to create a suitably sized supporting base for the unit.

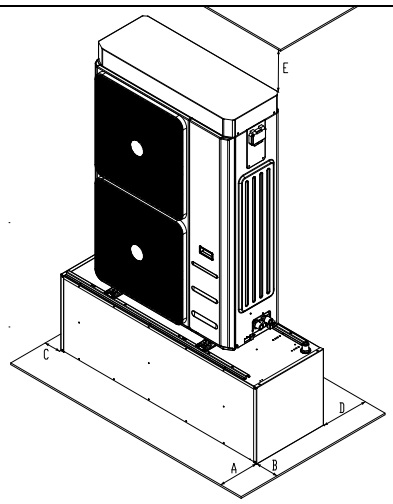

MOD.	A	B*	C	D	E*
Vitocal 100-A	1500	800	800	500	500

* Minimum clearance recommended for installation, servicing and maintenance

7.4 INSTALLATION

The frame is supplied fully assembled with the exception of one of the two omega supports which allow the Vitocal 100-A unit to be fastened on top of the storage tank. During installation, check the Vitocal 100-A model to which the ACT unit will be coupled and fix with the correct centre distance the omega support using the fixing screws and washers (supplied) in the threaded inserts already prepared. Place between the Vitocal 100-A unit and the anti-vibration dampers supplied, and before the start-up ensure everything is properly secured.

Vitocal 100-A

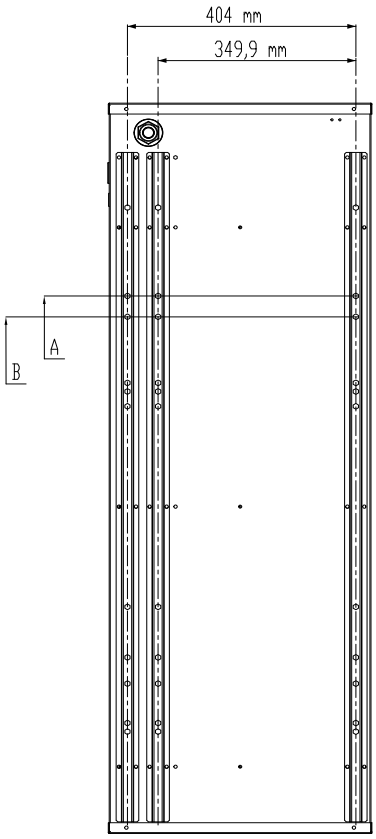

Fix the Omega support with the correct centre distance depending on the size of the unit.

Model	Position of the 1st foot support	Omega support centre distance position
AWO-M-AC 101.A10 AWO-M-AC 101.A12	A	404 mm
AWO-M-AC 101.A14 AWO-AC 101.A14 AWO-M-AC 101.A16 AWO-AC 101.A16 AWO-AC 101.A18	B	
AWO-M-AC 101.A06 AWO-M-AC 101.A08	B	349.9 mm

The colour of ACT units is the same as the painting of Vitocal 100-A units

The unit is supplied with anti-vibration dampers which must be installed between the Vitocal 100-A unit and the storage tank:

- Screw the OMEGA-type fixing brackets to the top panel in their holes with the three M4 washers respecting the following order: plastic washer, flat washer and grower washer (see the image above).
- Insert the damper in the threaded inserts present on the omega bracket.
- Insert the supplied M6 plastic washers.
- Place the Vitocal 100-A unit.
- Insert the additional supplied M6 washers (3 for each damper in the same order as described above).

Tighten everything with the provided nuts.

Refer to the image given in the paragraph 5.4.

The Vitocal 100-A units require only 4 vibration dampers.

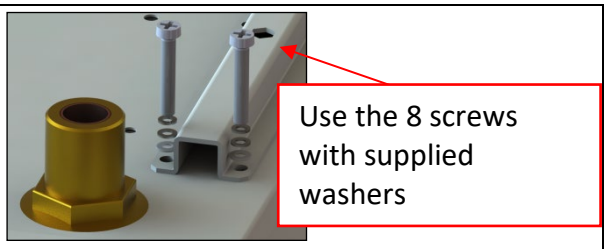

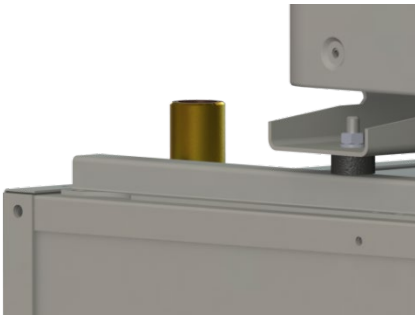

7.5 PLUMBING CONNECTIONS

The plumbing connections must be performed in accordance with national and/or local regulations and with all the specifications and components indicated in the manual of the Vitocal 100-A units. The connection between the two units must be performed with the supplied extensible flexible pipe by adjusting it to the position of the Vitocal 100-A unit's outlet connection.

The plumbing connections must be made in accordance with national and/or local regulations; pipes can be made of steel, galvanised steel or PVC. Pipes must be accurately sized according to the nominal water flow rate of the unit and the pressure drops of the water circuit. All pipes must be insulated with closed-cell material of adequate thickness. The water circuit should include the following components:

- Well thermometers to monitor the circuit's temperature.
- Metal Y filter (installed on the return pipe) with metal mesh no larger than 1 mm
- Loading group and exhaust valve where necessary

⚠	***CAUTION: when sizing the pipes, make sure not to exceed the maximum pressure drop on plant side set out in the Vitocal 100-A units manual.***
	CAUTION: connect the pipes to their fittings always using the key to key method.
	CAUTION: install the appropriate anti-vibration dampers with the washers to protect the plate.

7.5.1 Plumbing connections between Vitocal 100-A and ACT

The ACT unit is installed along the delivery line to the system, while the return line is connected to the Vitocal 100-A unit fitting (see the manual of the associated Vitocal 100-A unit). Attach the extensible joint to the outlet connection of the Vitocal 100-A unit, insert the supplied gasket between the connection joint and the outlet connection, and connect the joint to the supplied elbow fitting, which must be screwed onto the water connection on the top part of ACT unit indicated with the label "From HP". Connect the system to the plant circuit, outlet side, from the sleeve placed laterally to the unit marked with the label "To the plant".

The required connection for the AWO-AC 101.A16 model is shown below as an example. <u>It is always mandatory</u> to check the correct outlet connection of the unit to which the ACT water tank will be connected by referring to the user manual.

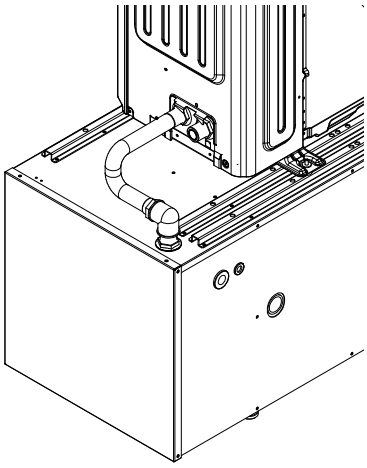

7.5.2 Service valve

When it is required to top up the circuit or to adjust the glycol level, one may use the service valve which is accessible through the removable panel on the side opposite the water connections. Unscrew and remove the cap from the service valve and connect a 14 mm (inside diameter) pipe, connected to the water mains, to the hose connector and then drain the circuit by unscrewing the specific ring nut. After the end of the operation, retighten the ring nut and screw the cap back on. In any case it is recommended to use an external valve to fill the system, which can be set up by the installer.

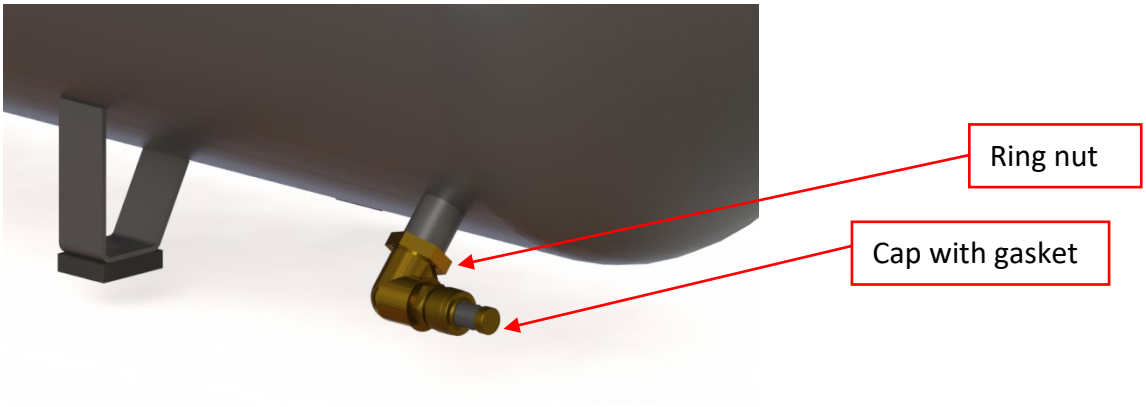

7.5.3 Discharge of the plant

When the unit needs to be completely discharged, use the provided service valve.

It is advisable to install a suitable discharge pipe in order to preserve the surrounding area and to drain the technical fluid following standards in force in the place of installation.

7.5.4 Condensate drainage of Vitocal 100-A unit

There is a clamp support on the side panel of the ACT unit, to fix the condensate drain pipe of the Vitocal 100-A unit, whose spouts are placed under said unit. The pipe can be accompanied on the side of the unit and blocked by means of the supplied clamp so as to maintain the compactness of the system.

7.5.5 Removal of the panels for inspection and maintenance

The procedure for removing the panels so as to access the heater kit and expansion vessel kit is illustrated below.

1) Remove the 6 screws indicated	2) Pull the panel forward	3) In this way you can access the components

To reposition and secure the panel, repeat the process in reverse order.
In a similar way you may access the expansion vessel position, installed on the opposite side.
The side panels may be removed should the need arise to operate on some water connections inside the unit.

1) Remove the front and rear panels as indicated above. Remove the fixing screws of the indicated side panel.	2) Pull the panel down about 15-20 mm	3) Slide the panel out from the side

8 START-UP

Before start-up:

- Make sure that all fasteners are properly tightened and that the feet of the tank are well levelled.
- Check that all the water connections are properly connected with the appropriate gaskets.
- Check that all panels are positioned correctly and well-fixed with screws.

⚠	***CAUTION: IT IS REQUIRED TO REDUCE THE PRESSURE OF THE EXPANSION VESSEL OF THE Vitocal 100-A UNIT TO 1.5 BAR***

9 SHUTDOWNS FOR LONG PERIODS

If the unit will not be used for a long period it is suggested to drain the water tank through the appropriate valve. For the restart, please follow all the instructions and precautions given of this manual.

⚠	***If the temperature drops below zero there is serious danger of frost: provide a mixture of water and glycol in the system, otherwise drain the plumbing and the water circuits.***
⚠	***CAUTION: even temporary operation with water temperatures below +5°C is not guaranteed on the basis of the limits established for the Vitocal 100-A units. Before you turn the unit back on after a long idle period, make sure that the temperature of the mixture of working fluid is higher than or at least equal to +5°C.***

10 MAINTENANCE AND PERIODIC CHECKS

	CAUTION: All the operations described in this chapter MUST BE CARRIED OUT BY QUALIFIED PERSONNEL ONLY. After servicing operations, re-install the cover panels, and fix them by means of screws.
	Be careful when working near the condensing coils. ***The aluminium fins are very sharp and can cause serious injuries.***
	After the maintenance operations, close the panels by fixing them with screws.

It is a good rule to carry out periodic checks in order to verify the proper operation of the unit:

OPERATION	1 month	4 months	6 months
Filling the water circuit.	x		
Presence of bubbles in the water circuit.	x		
Check the proper working of the safety and control devices.	x		
Check if there is a possible water leakage from the water circuit.	x		
Clean the metal filters of the water circuit.	x		
Tightening of plumbing connections.		x	
Check the operating pressure, superheating and sub-cooling.			x
Check the expansion vessel (if installed)			x
If the unit should be out of service for a long period, drain water from the pipes and water tank. This operation is necessary if, during seasonal stoppages, ambient temperature is expected to go down below the freezing point of the employed fluid.			x

11 DECOMMISSIONING

Once the unit has reached the end of its life cycle and needs to be replaced, the following operations are recommended:

- the refrigerant has to be recovered by trained personnel and sent to proper collection centres;
- the compressors' lubricating oil has to be collected and sent to proper collection centres;
- the electronic components, such as regulators, driver boards and inverters, must be disassembled and sent to proper collection centres;
- the structure and the different components, if unusable, must be scrapped and divided according to their nature; there is especially a good amount of copper and aluminium in the machine.

These operations allow easy material recovery and the recycling process, thus reducing the environmental impact.

The user is responsible for the proper disposal of this product, according to national regulations in the country of destination of the appliance. For more information you should contact the Installation Company or local competent authority.

	An incorrect decommissioning of the appliance may create serious environmental damage and endanger people's safety. Therefore, it is recommended that the unit be disposed only by authorised persons with technical training who have attended training courses acknowledged by the competent authorities.
	It is required to follow the same precautions described in the previous paragraphs.
	Pay special attention during disposal of the refrigerant gas.
	The illegal disposal of the product by the end user leads to the application of the penalties in accordance with the law in the country where the disposal takes place.
	The crossed-out bin symbol applied on the appliance indicates that the product, at the end of its useful life, must be collected separately from other waste.

12 TECHNICAL DATA

TECHNICAL SPECIFICATIONS	Unit of measurement	Technical storage tank		
		50 litres	75 litres	95 litres
Capacity	litres	50	75	95
Max operating temperature	°C	95		
Operating pressure	bar	3		
Max pressure	bar	6		
Net/gross weight	kg	60/69	65/74	69/78
Full load weight	kg	110	140	165
Material		Steel SJ235		
Painting		Black solvent-based exterior paint		
TECHNICAL SPECIFICATIONS	**Unit of measurement**	**Framework**		
		Width	**Minimum-maximum height**	**Depth**
Dimensions (WxHxD)	mm	1360	504 – 527	466
Max packaging dimensions (WxHxD)	mm	1445	657	690
Material		Painted and galvanised steel		
Painting		Polyurethane powder		

TECHNICAL SPECIFICATIONS	Unit of	Expansion Vessel Kit (for all sizes)
Capacity	litres	18
Operating pressure	bar	1.3
Max pressure	bar	3.0
Operating weight	kg	15

TECHNICAL SPECIFICATIONS	Unit of	Electrical Heater Kit (for all sizes)						
Power	kW	4.5		3		2		1.2
Voltage	V	230	400	230	400	230	400	230
Fuses	A	20	8	20	8	10	4	6

TECHNICAL CHARATTERISTICS WITH INSTALLED ANTIFREEZE KIT		
	Unit of	
Total depth of the system	mm	553
Operating pressure	bar	0.01 - 8
Maximum temperature	°C	80

N.B.the technical data are indicative and are subject to change. Please refer to the technical labels on the units.

CAUTION: The minimum temperature allowed for storing the units is 5°C.

12.1 PRESSURE DROPS

The characteristic curve corresponds to the pressure drops of technical water inertial tank. These drops must be subtracted from the useful head data provided in the user-installer manual of Vitocal 100-A units.

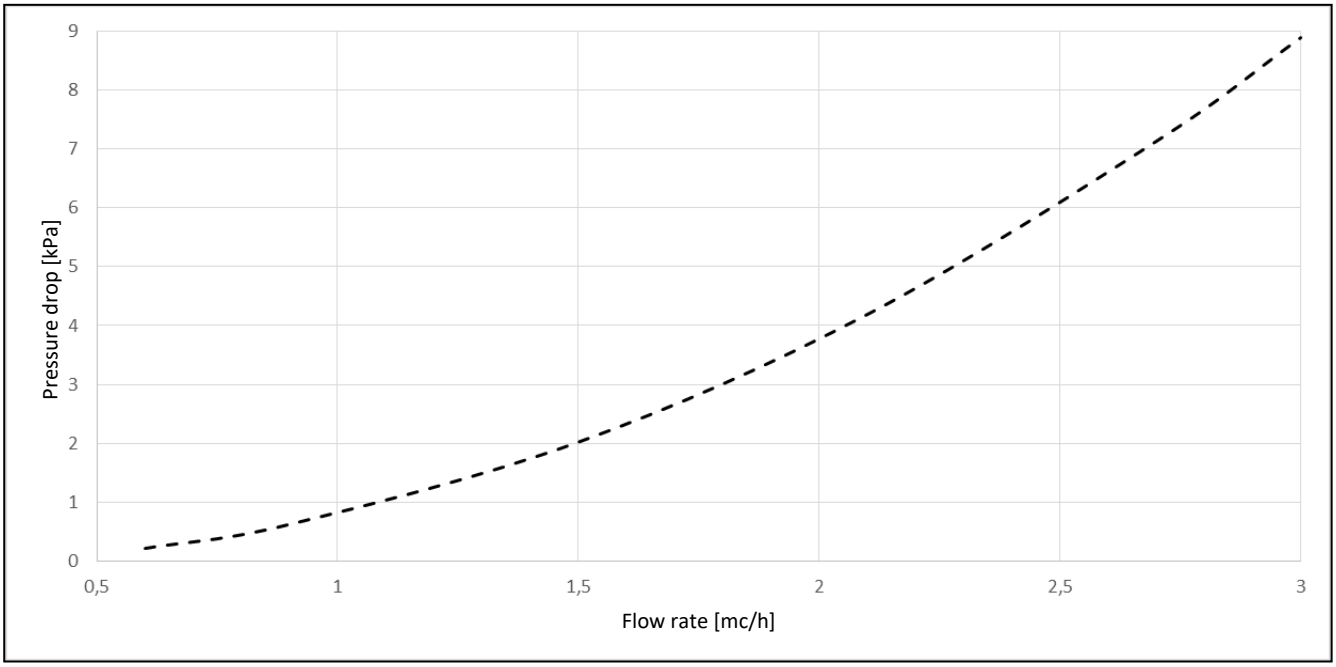

12.1.1.1 ELECTRICAL DATA

When you have installed the electric heater kit, it is necessary to make the connections reported in Paragraph 6.1.2 and to adapt the power supply according to the chosen heater type and to the absorbed powers and electric currents given in the table below. If there's any doubt about the installed electric heater kit, please see chapter 6 comparing it to the associated unit's code which you can read on the technical label applied on the unit itself.

Heater Model	Maximum input power	Maximum input current	Fuses	Power supply
2 kW SINGLE-PHASE	2 kW	8,70 A	10 A	230V/1/50Hz
3 kW SINGLE-PHASE	3 kW	13,04 A	20 A	230V/1/50Hz
4,5 kW SINGLE-PHASE	4,5 kW	19,57 A	20 A	230V/1/50Hz
1,2 kW SINGLE-PHASE	1,2 kW	5,22 A	6 A	230V/1/50Hz
2 kW THREE-PHASE	2 kW	2,89 A	4 A	400V/3P+N+T/50Hz
3 kW THREE-PHASE	3 kW	4,34 A	8 A	400V/3P+N+T/50Hz
4,5 kW THREE-PHASE	4,5 kW	6,50 A	8 A	400V/3P+N+T/50Hz

13 DIMENSIONS

13.1 DIMENSIONS

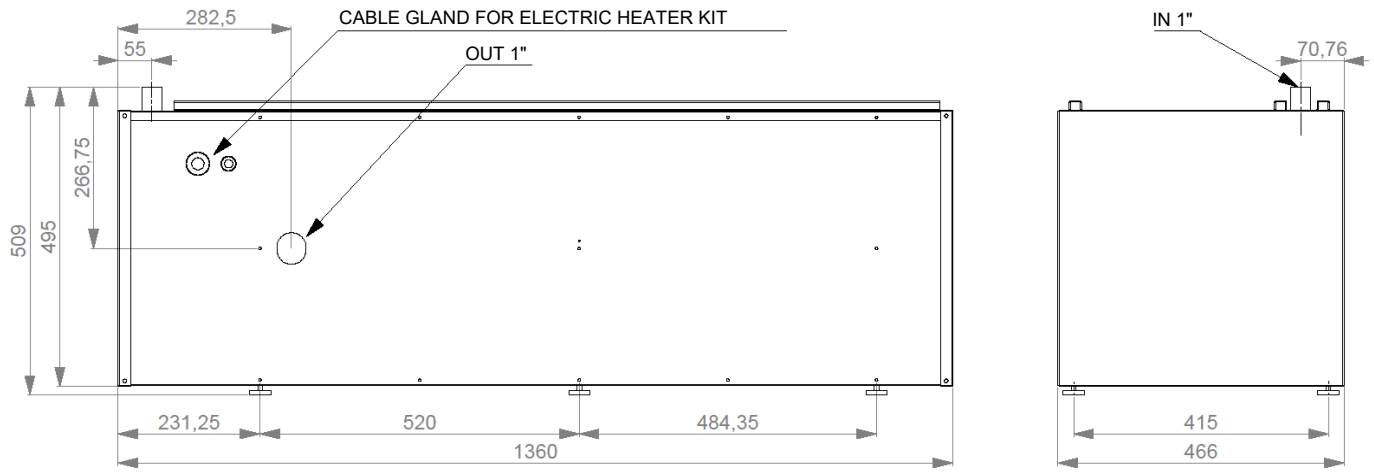

13.2 FOOTPRINT WITH VARIOUS SIZES OF Vitocal 100-A.

13.2.1 Footprint with Vitocal 100-A ranges

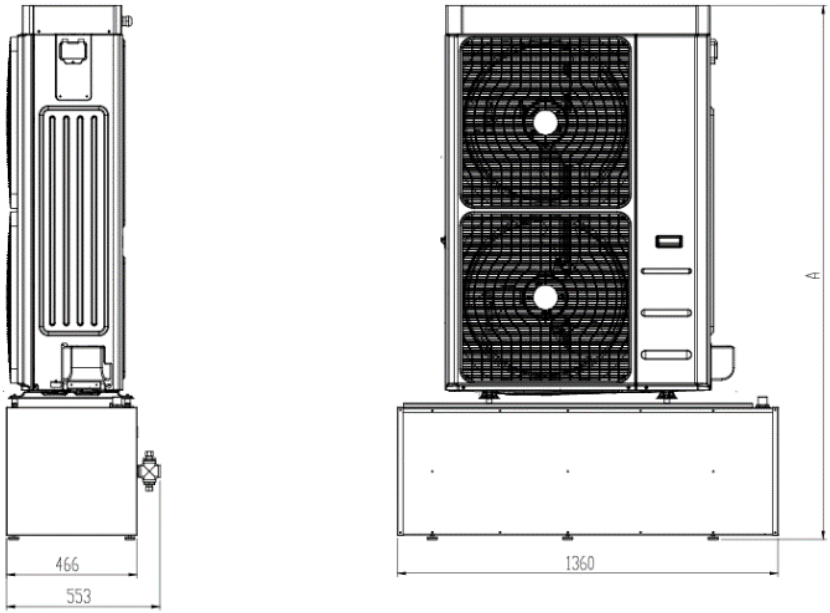

VARIATION OF THE HEIGHT (A) DEPENDING ON THE ADJUSTMENT OF SUPPORTING FEET		
MODEL Vitocal 100-A	**MINIMUM**	**MAXIMUM**
AWO-M-AC 101.A06 AWO-M-AC 101.A08	1320 mm	1343 mm
AWO-M-AC 101.A10 AWO-M-AC 101.A12	1425 mm	1448 mm
AWO-M-AC 101.A14 AWO-AC 101.A14 AWO-M-AC 101.A16 AWO-AC 101.A16 AWO-AC 101.A18	1910 mm	1933 mm

14 TYPICAL PLUMBING CONNECTION

Specifically, the plumbing connection for a typical installation is shown.

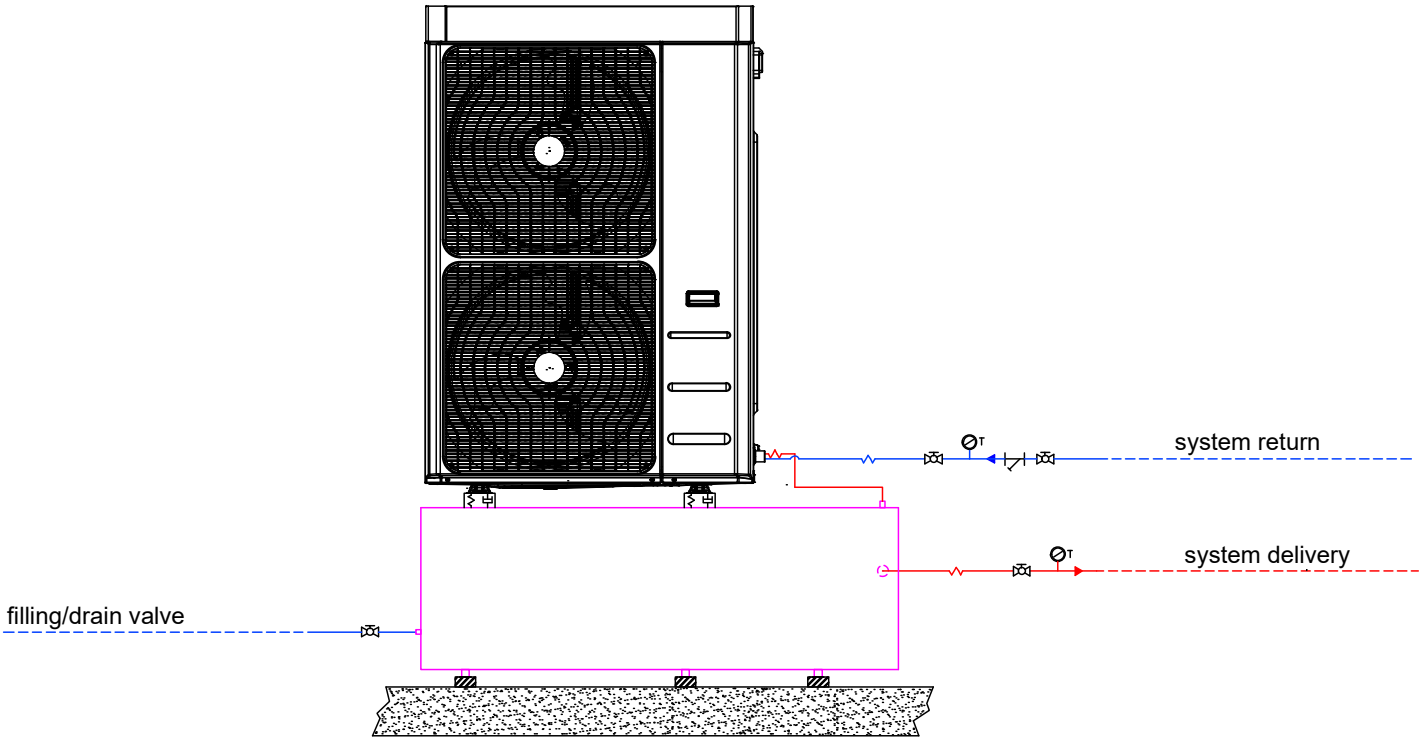

15 HANDBOOK FOR INSTALLATION CONFIGURATION

If you need more information about the possible configurations, there is a handbook which is a technical notebook including a series of system diagrams that have been highlighted regarding the installation configuration of our high efficiency heat pumps. The Handbook is also intended to show the symbiosis potential with some of our elements found in the catalogue.
Consult the technical notebook at our headquarters.

Viessmann Limited
Hortonwood 30, Telfort
Shropshire , TF1 7YP, GB
Telephone: +44 1951675000
Fax: +44 1952 675040
E-mail: info-uk@viessmann.com

6167566 Confidential technical information!