G4 Doorbell Pro PoE with Smart PoE Chime

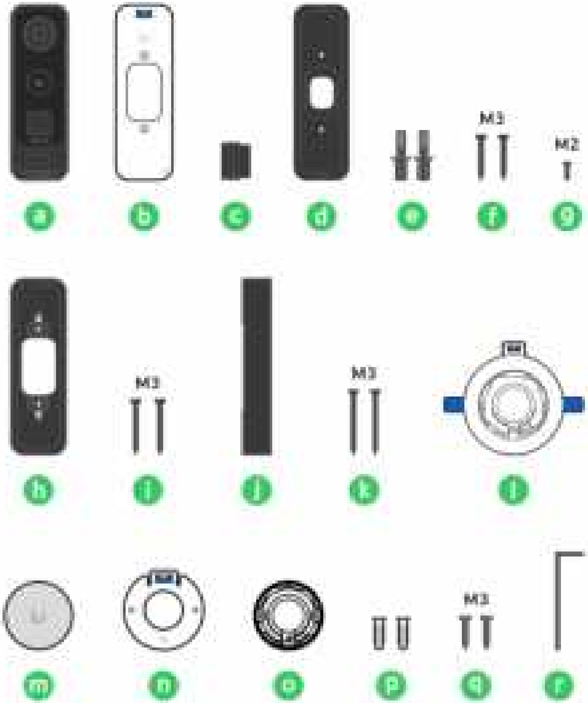
a
b
c
d
e
M3
f
M2
g
h
M3
i
j
M3
k
l
m
n
o
p
M3
q
r

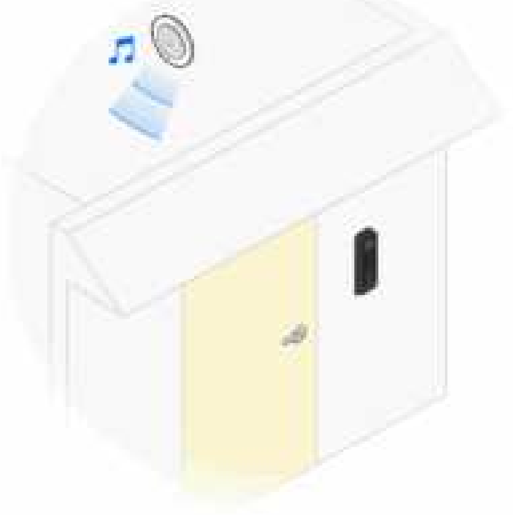

1

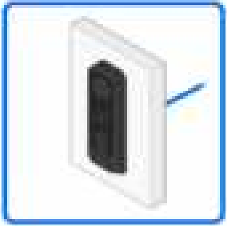

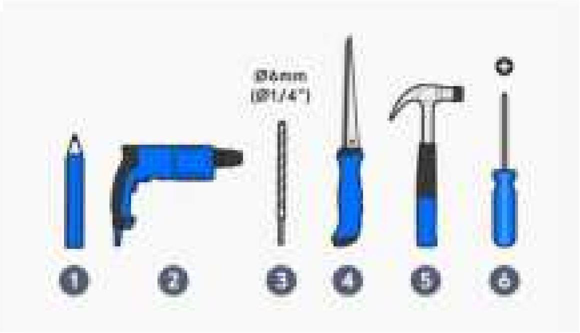
Ø6mm
(Ø1/4")
1
2
3
4
5
6

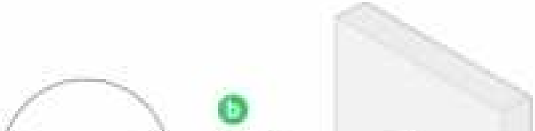

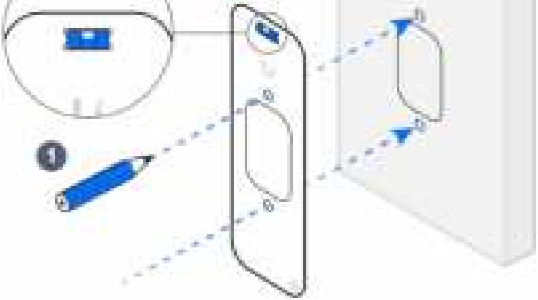

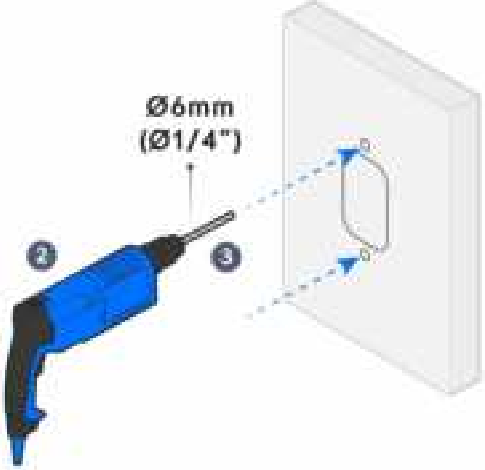

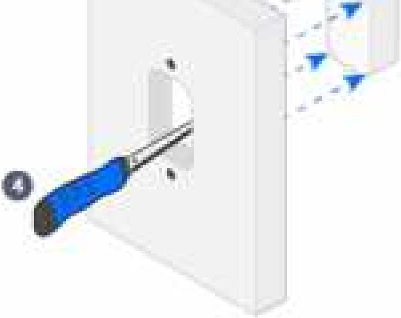

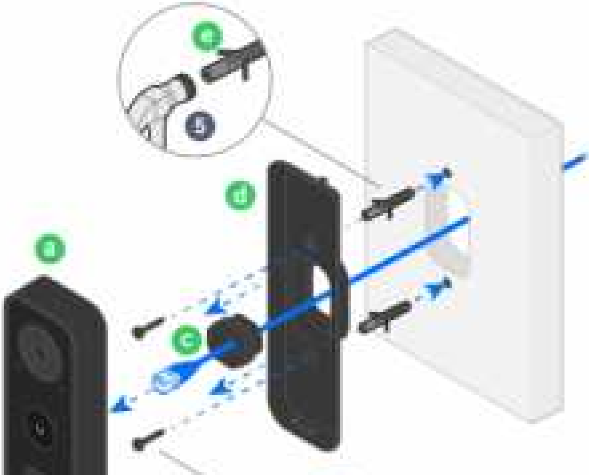

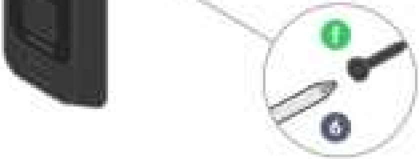

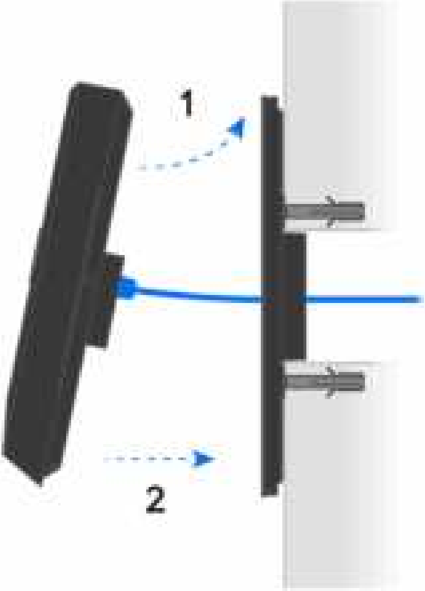

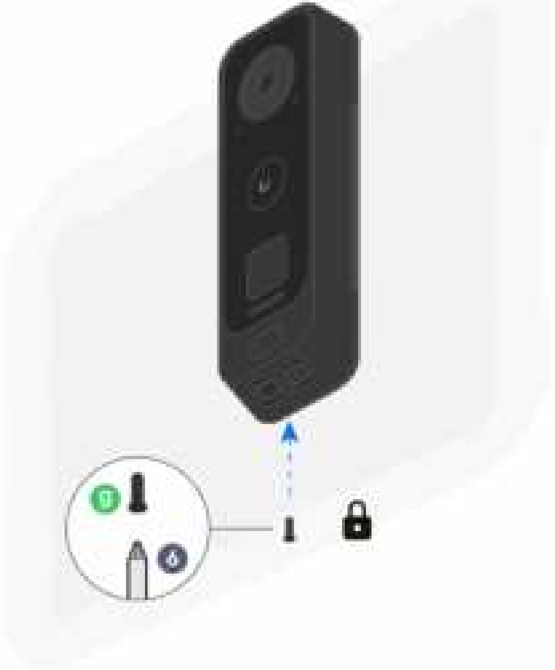

B

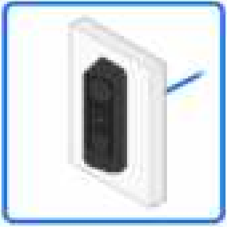

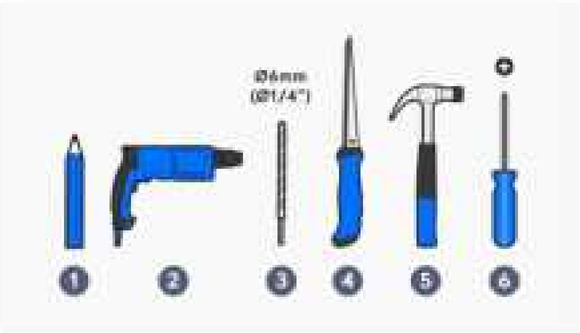
Ø6mm
(Ø1/4")
1
2
3
4
5
6

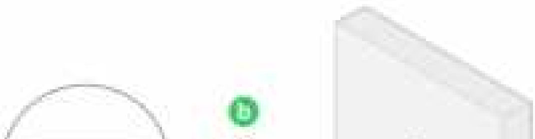

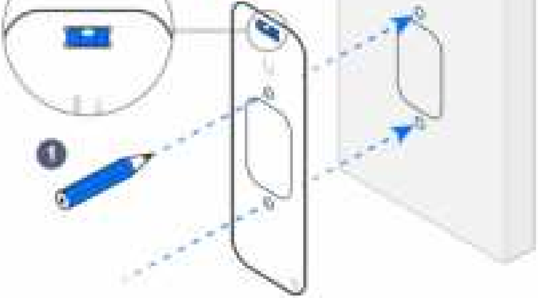

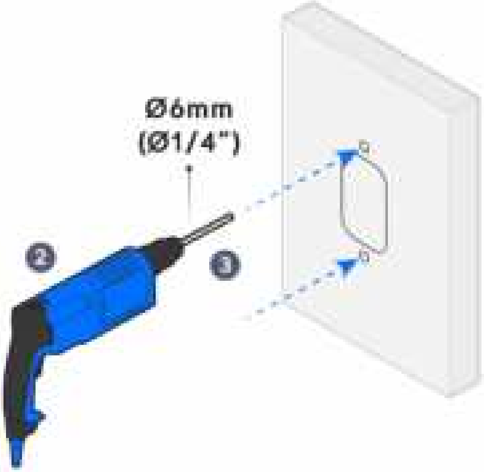

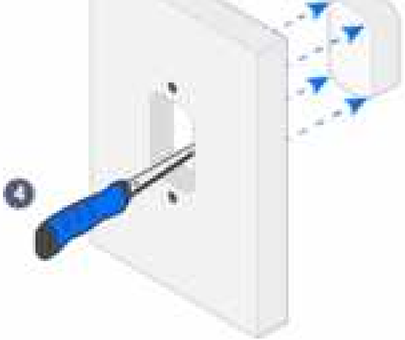

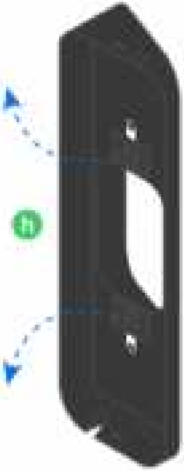

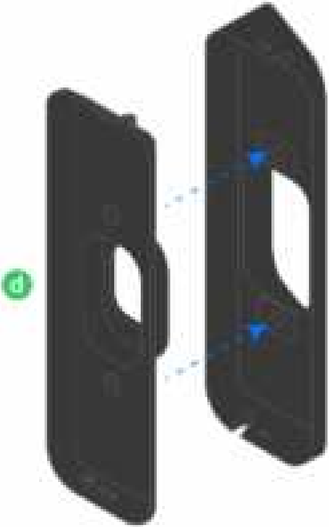

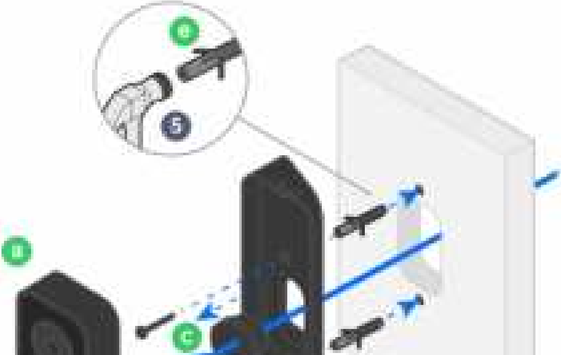

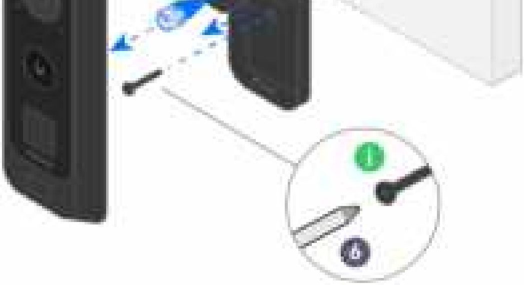

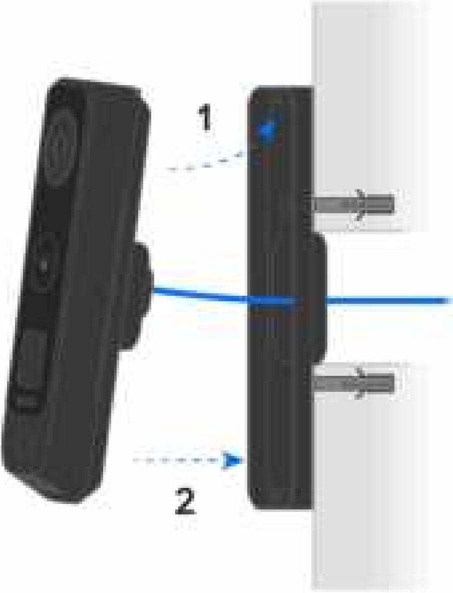

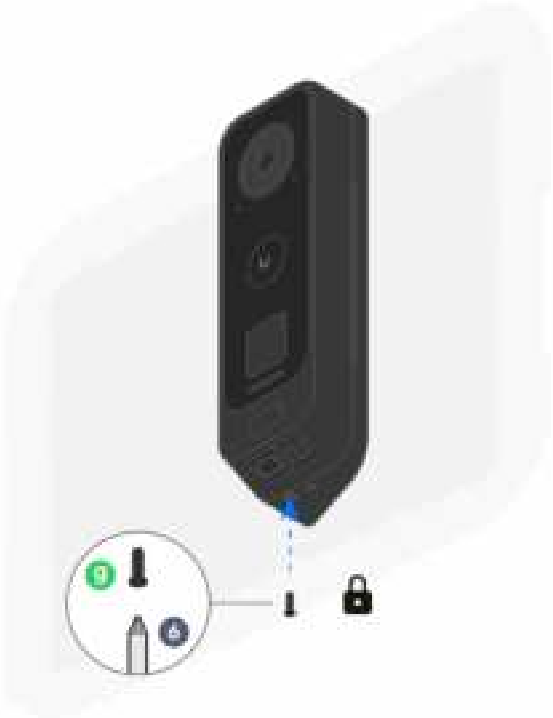

C

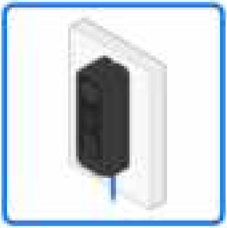

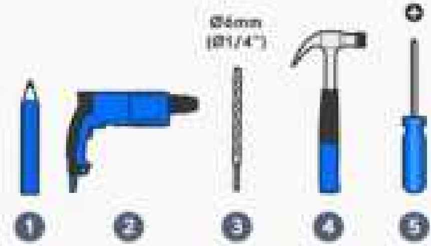
Ø6mm
(Ø1/4")
+
1
2
3
4
5

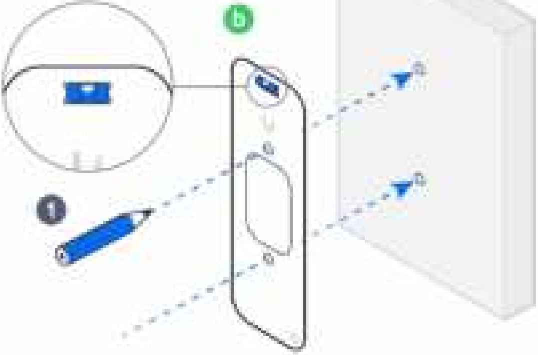

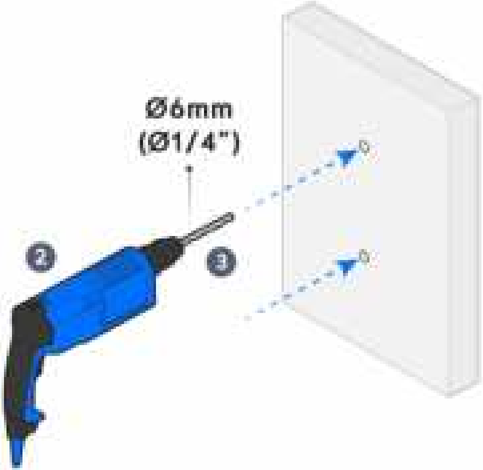

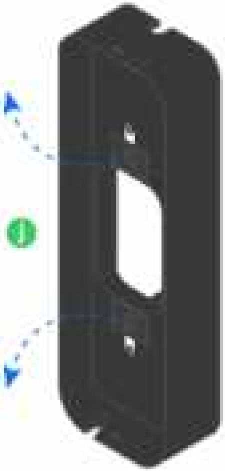

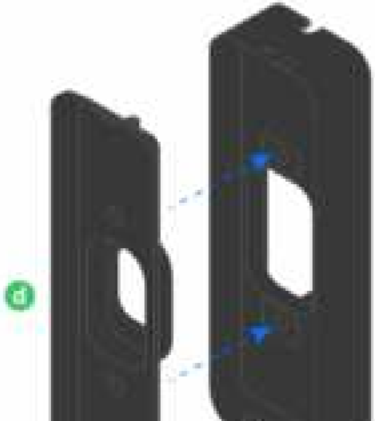

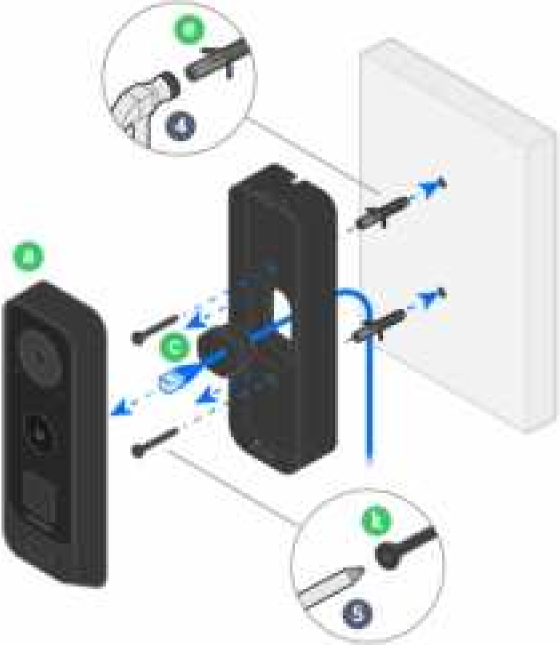

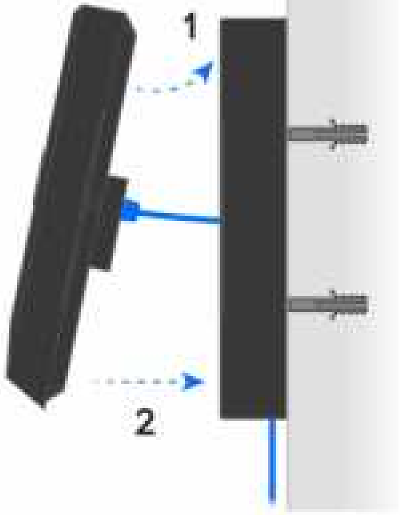

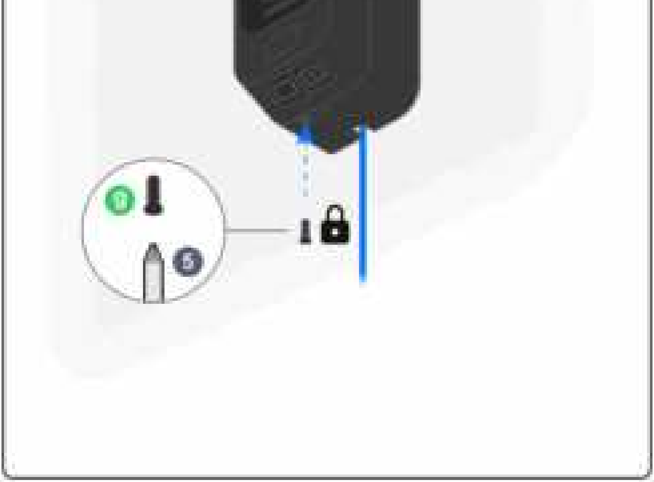

2

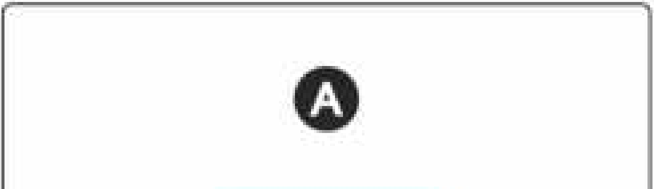

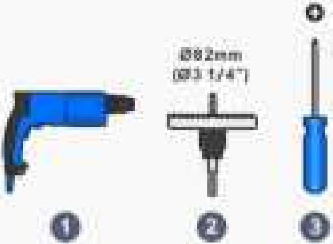
Ø82mm
(Ø3 1/4")
1
2
3

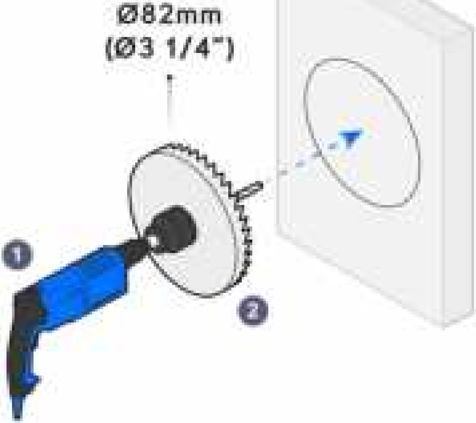
Ø82mm
(Ø3 1/4")
1
2

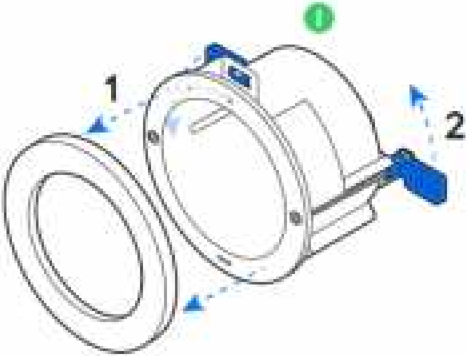

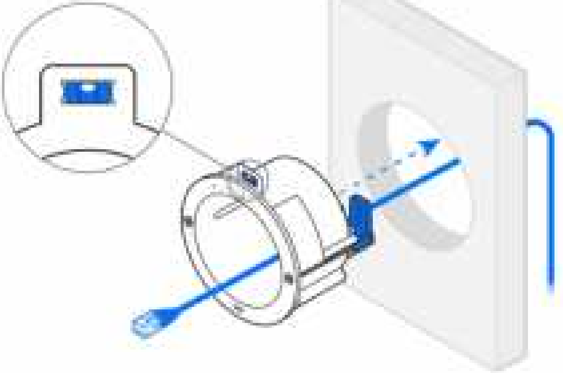

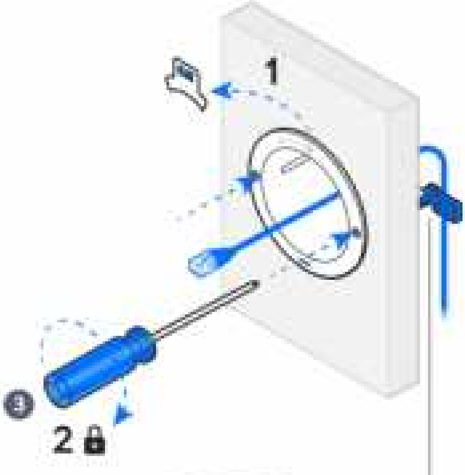

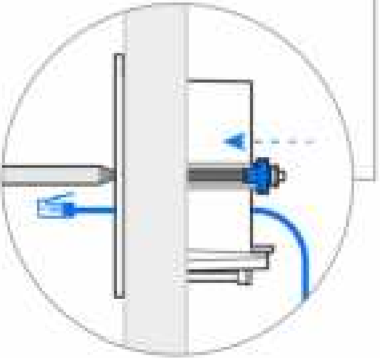

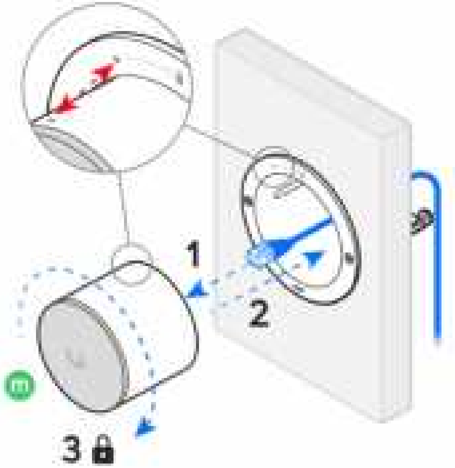

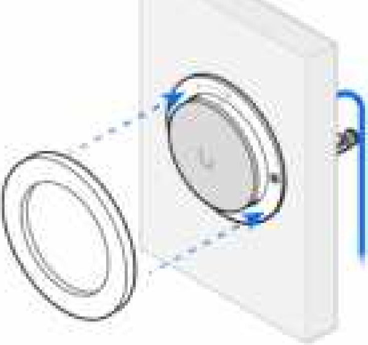

B

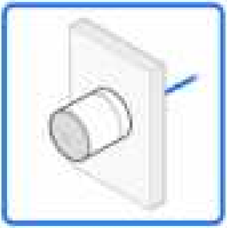

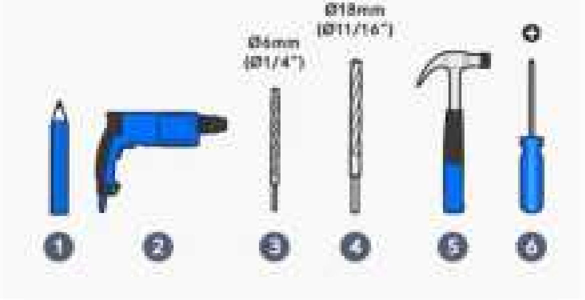
Ø18mm
(Ø11/16")
Ø6mm
(Ø1/4")
1
2
3
4
5
6

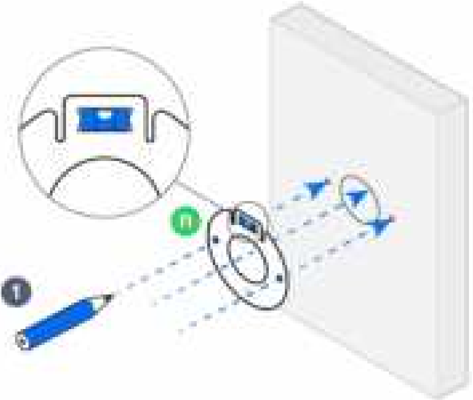

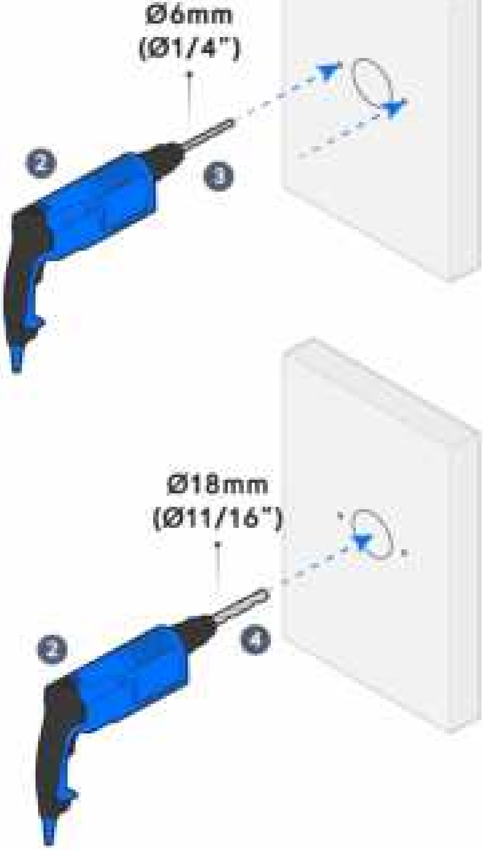
Ø6mm
(Ø1/4")
2
3
Ø18mm
(Ø11/16")
2
4

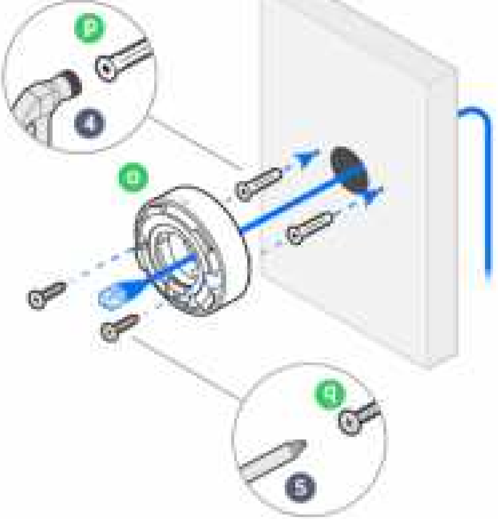

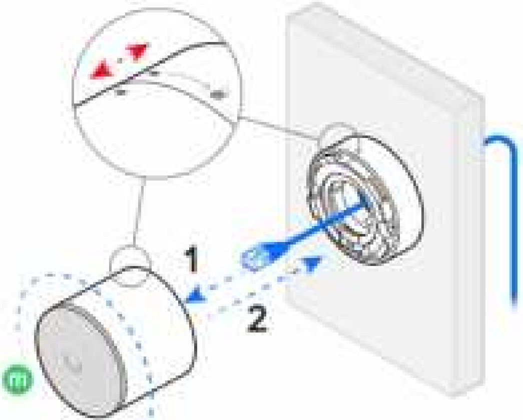

C

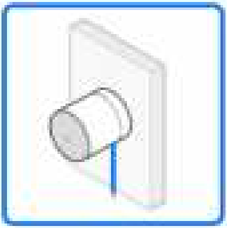

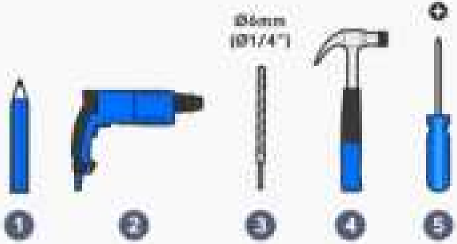
Ø6mm
(Ø1/4")
1
2
3
4
5

✓

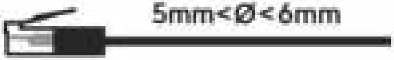

✗

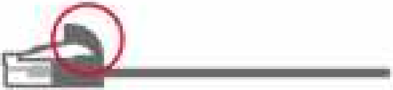

✗

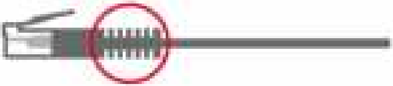

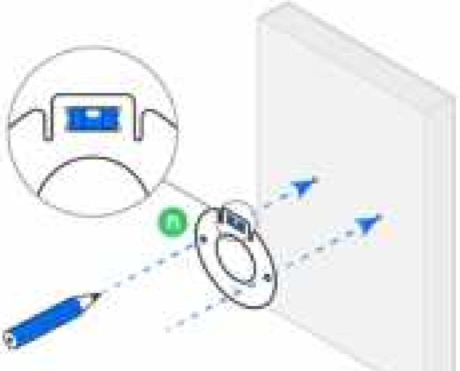

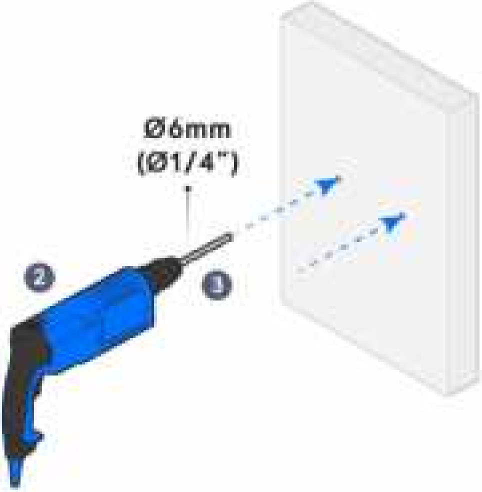

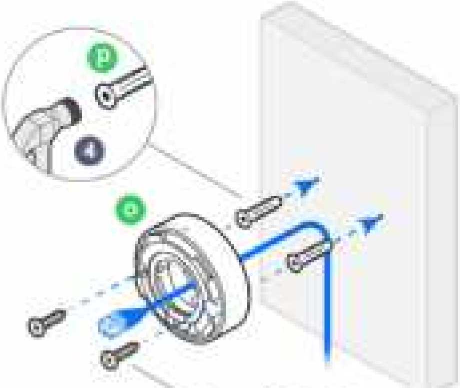

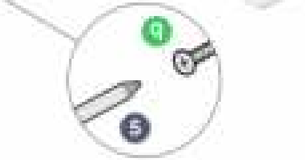

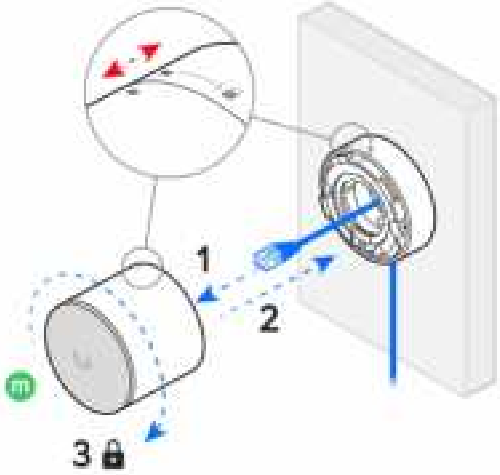

3

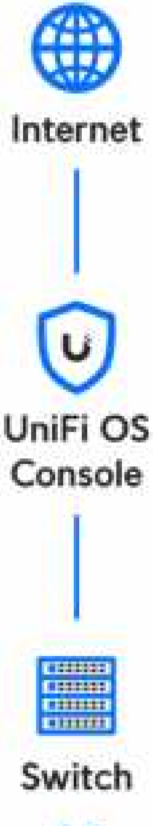
Internet
UniFi OS Console
Switch

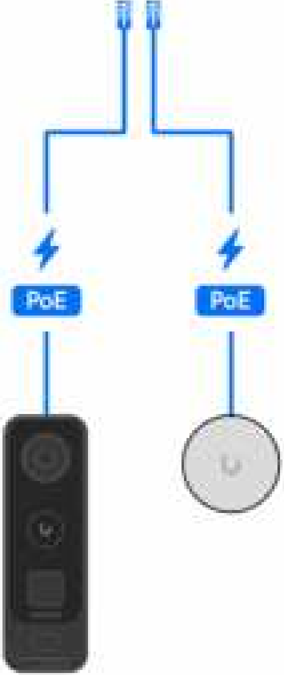

4

Download on the App Store

GET IT ON Google Play

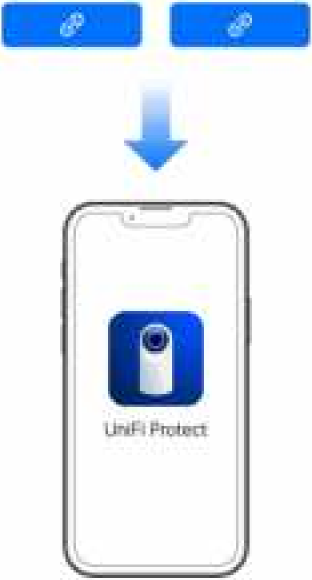
UniFi Protect

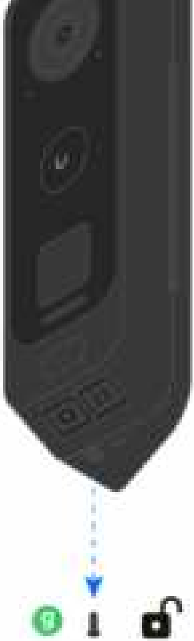

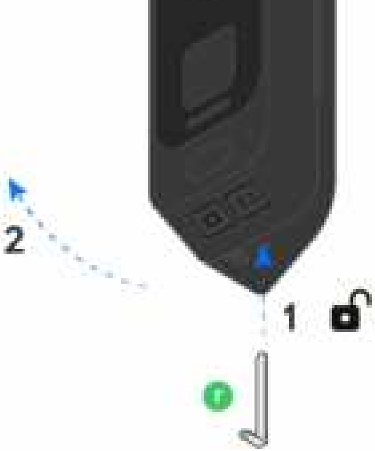

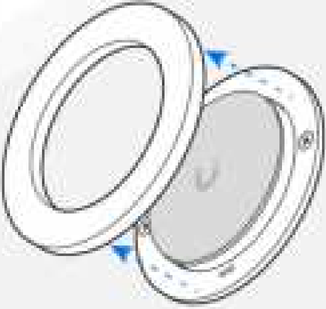

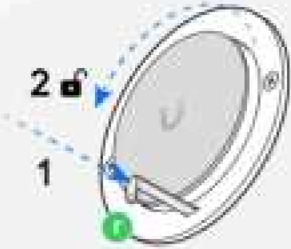

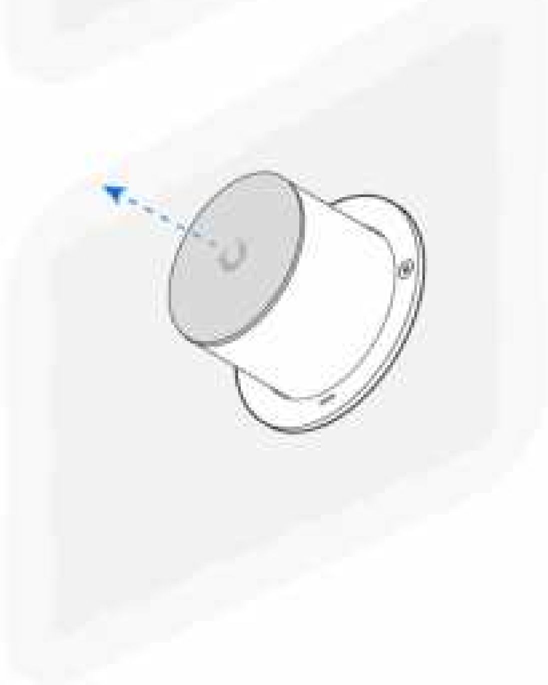

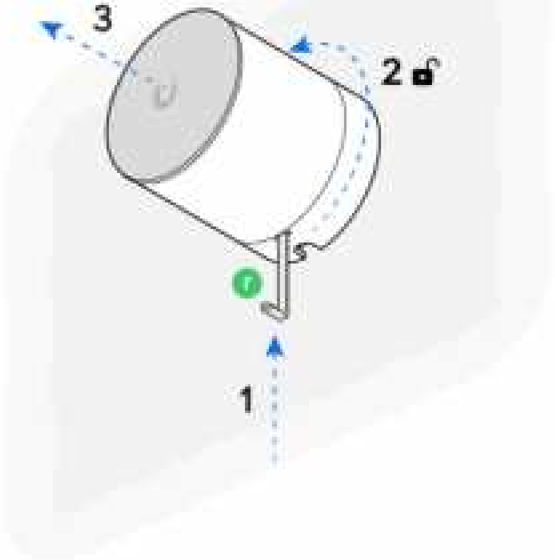

Get Answers
help.ui.com

UI Support