User and Installer Manual

NIBE

Indirect heated storage water heater
NIBE VPB S200/S300 UK

CHB EN 2424-4
531237

Table of Contents

1 Important information 4
- Safety information 4
- General 4
- Serial number 4
- Recovery 4
- Country specific information 5
- Compatible products 5
- Inspection of the installation 6

2 For the User 7
- Maintenance 7

3 For the Installer 8
- Delivery and handling 8
- The water heater design 10
- Pipe connections 10
- Electrical installation 13
- Commissioning and adjusting 14
- Service and maintenance 15

4 Technical data 16
- Dimensions 16
- Technical specifications 17
- Energy labelling 18

Contact information 23

Important information

Safety information

This manual describes installation and service procedures for implementation by specialists.

The manual must be left with the customer.

For the latest version of the product's documentation, see nibe.co.uk.

This appliance can be used by children aged from 8 years and above and persons with reduced physical, sensory or mental capabilities or lack of experience and knowledge if they have been given supervision or instruction concerning use of the appliance in a safe way and understand the hazards involved. Children shall not play with the appliance. Cleaning and user maintenance shall not be made by children without supervision.

This is an original manual. It may not be translated without the approval of NIBE.

Rights to make any design or technical modifications are reserved.

©NIBE 2024.

Water may drip from the safety valve's overflow pipe. The overflow pipe must be routed to a suitable drain, to prevent hot water splashes from causing harm. The overflow pipe must be inclined along its entire length to prevent pockets where water can accumulate, and must be frost-proof. The overflow pipe must be at least the same size as the safety valve. The overflow pipe must be visible and its mouth must be open and not placed close to electrical components.

The safety valves must be actuated regularly to remove dirt and to check that they are not blocked.

SYMBOLS

Explanation of symbols that may be present in this manual.

CAUTION!

This symbol indicates danger to person or machine.

NOTE!

This symbol indicates important information about what you need to consider when installing, servicing or maintaining the installation.

MARKING

Explanation of symbols that may be present on the product's label(s).

Dangerous voltage.

Read the Installer Manual.

General

VPB S200/S300 is designed and manufactured according sound engineering practice[1] in order to ensure safe usage.

[1] Pressure Equipment Directive 2014/68/EU Article 4 point 3.

Serial number

The serial number can be found at the bottom right of the front cover.

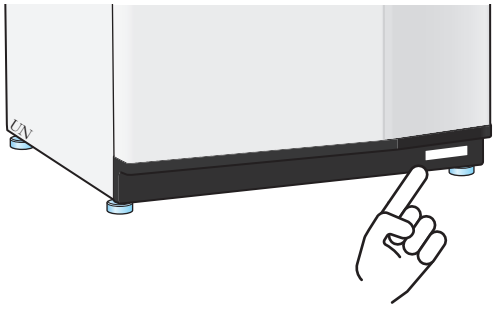

NOTE!

You need the product's (14 digit) serial number for servicing and support.

Recovery

Leave the disposal of the packaging to the installer who installed the product or to special waste stations.

Do not dispose of used products with normal household waste. It must be disposed of at a special waste station or dealer who provides this type of service.

Improper disposal of the product by the user results in administrative penalties in accordance with current legislation.

Country specific information

UNITED KINGDOM

This installation is subject to building regulation approval, notify the local Authority of intention to install.

Use only manufacturer's recommended replacement parts.

For more information see nibe.co.uk.

benchmark
COLLECTIVE MARK
THE MARK OF QUALITY FOR THE INSTALLATION, COMMISSIONING AND SERVICING OF DOMESTIC HEATING AND HOT WATER SYSTEMS

Warranty and insurance information

Thank you for installing NIBE water heater in your home.

NIBE water heaters are manufactured in Sweden to the very highest standard so we are pleased to offer our customers a comprehensive guarantee.

The product is guaranteed for 24 months for parts and labour from the date of installation or 33 months from the date of manufacture, whichever is the shorter.

The NIBE guarantee is based on the unit being installed and commissioned by a NIBE accredited installer, serviced every year and the Benchmark documents completed. Where this condition is not met, any chargeable spare parts or components issued within the applicable guarantee period still benefit from a 12 month warranty from the date of issue by the manufacturer.

We recommend the installer completes and returns as soon as possible, your guarantee registration card or completes the guarantee form on the NIBE website, www.nibe.co.uk

Please ensure that the installer has fully completed the Benchmark Checklist in the end of the Installation Instructions supplied with the product and that you have signed to say that you have received a full and clear explanation of its operation. The installer is legally required to complete a commissioning checklist as a means of complying with the appropriate Building Regulations (England and Wales).

All installations must be notified to Local Area Building Control either directly or through a Competent Persons Scheme. A Building Regulations Compliance Certificate will then be issued to the customer who should, on receipt, write the Notification Number on the Benchmark Checklist.

This product should be serviced regularly to optimise its safety, efficiency and performance. The service engineer should complete the relevant Service Record on the Benchmark Checklist after each service.

The Benchmark Checklist may be required in the event of any warranty work and as supporting documentation relating to home improvements in the optional documents section of the Home Information Pack.

Compatible products

- S1156-8, 13, 18*
- S2125-8, 12
- S735
- F1145-6, 8, 10, 12*
- F1126-8, 12*
- F2120-16
- F2050-6, 10

For ground-source heat pumps, the recommendation applies for max. 10°C brine temperature and 53°C in the tank applies.

NOTE!

In installations with an air/water heat pump, a control module is also necessary.

Inspection of the installation

Current regulations require the heating installation to be inspected before it is commissioned. The inspection must be carried out by a suitably qualified person.

✔	Description	Notes	Signature	Date
Heat pump (page 12)				
	Shut off valves			
	Venting valve			
	Shut off valve			
Hot water (page 13)				
	Mixing valve			
	Expansion vessel			
	T&P valve			
	Tundish			
Cold water (page 13)				
	Shut-off valve			
	Valve connector with pressure relief valve, expansion relief valve and non-return valve			
	Tundish			
Electricity (page 13)				
	Connected supply			
	Sensors			
	Temperature limiter			
Miscellaneous				
	Benchmark checklist			

For the User

Maintenance

EXPANSION RELIEF VALVE

You can find the expansion relief valve on the incoming pipe (cold water) to VPB S200/S300.

The water heater's expansion relief valve sometimes releases a little water after hot water usage. This is because the cold water, which enters the water heater to replace the hot water, expands when heated, causing the pressure to rise and the expansion relief valve to open.

The function of the expansion relief valve must be checked regularly by a person who is competent for the task. Perform the checks as follows:

1. Open the valve.
2. Check that water is flowing through it.
3. Close the valve.

> **CAUTION!**
>
> If this pressurised water heater develops a fault, e.g. a flow of hot water from the overflow pipe, turn the heat pump off and contact your installer.

> **CAUTION!**
>
> Do not remove or adjust any components that are part of this pressurised water heater. Contact your installer!

EMPTYING

The water heater

Draining is performed through the siphon (using hose) in the cold water connection (XL3).

Charge coil

Draining is performed through the siphon (using hose) in the docking connection, return to heat pump (XL9).

VPB S200 / VPB S300

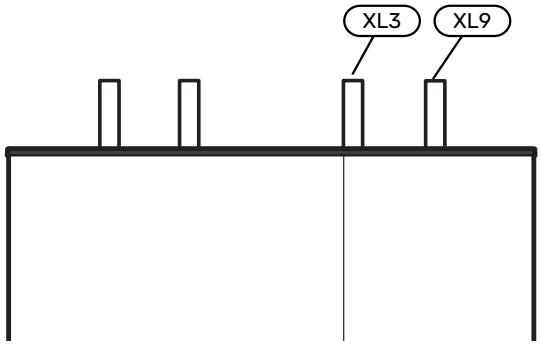

SERVICE

If servicing is required, contact your installer.

> **NOTE!**
>
> You need the product's (14 digit) serial number for servicing and support.

VPB S200/S300 must be serviced once a year by competent and qualified personnel, such as a NIBE a service engineer or other qualified professional.

When replacing components on VPB S200/S300 only replacement parts from NIBE may be used.

For the Installer

Delivery and handling

TRANSPORT

VPB S200/S300 should be transported and stored vertically in a dry place.

However, the VPB S200/S300 can be carefully laid on its back when being moved into the building.

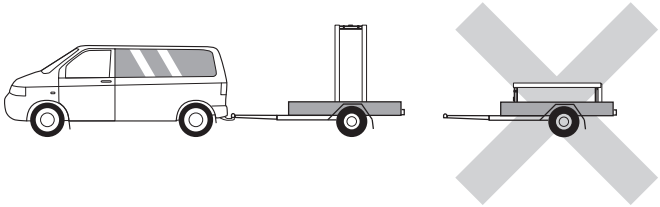

ASSEMBLY

- Position VPB S200/S300 on a solid foundation indoors that withstands water and the weight of the product.
- Use the product's adjustable feet to attain a horizontal and stable set-up.

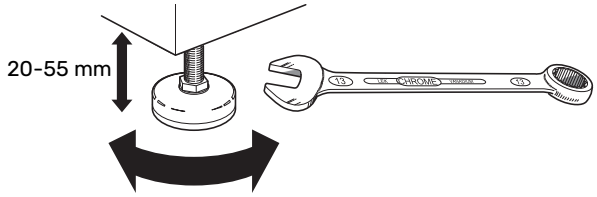

- Since water comes from VPB S200/S300, the area where VPB S200/S300 is located must be equipped with floor drainage.
- The space where VPB S200/S300 is located must be frost-free.

SUPPLIED COMPONENTS

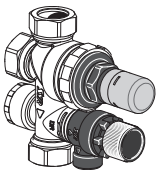

1 x pressure reduction valve (QN17) with expansion relief valve (FL1) and non-return valve (RM1)

2 x tundish

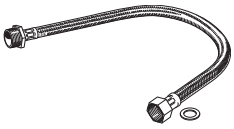

1 x armoured hose (expansion vessel)

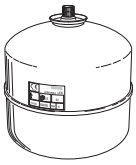

1 x expansion vessel domestic water (CM4) with holder (enclosed separately)

1 x cover disc

HANDLING PANELS

Remove the front

1. Pull the panel's top edge towards you and lift diagonally upwards to remove it from the frame.

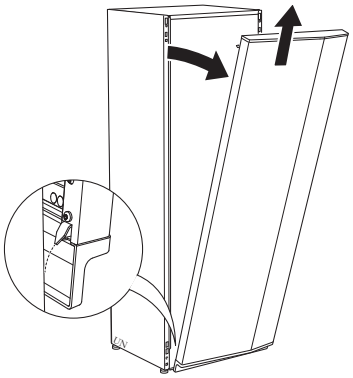

Assemble the front

1. Hook one bottom corner of the front onto the frame.

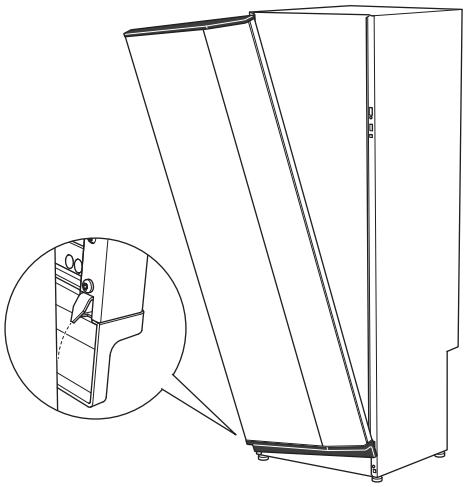

2. Hook the other corner in place.

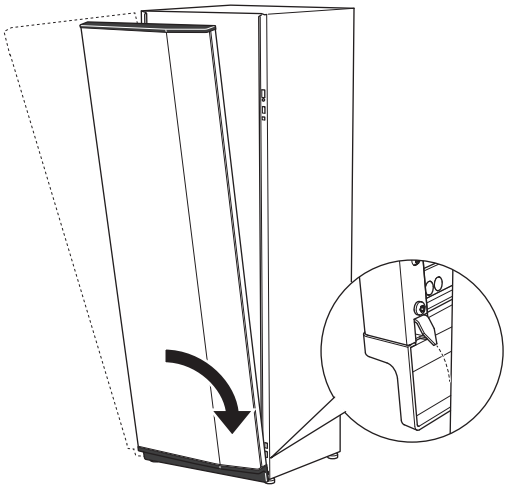

3. Press the front's top section against the frame.

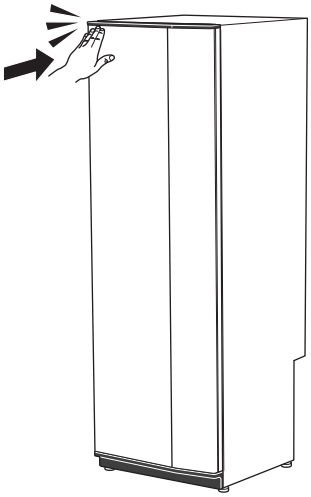

Remove side panel

The side panels can be removed to facilitate the installation.

1. Remove the screws from the upper and lower edges.

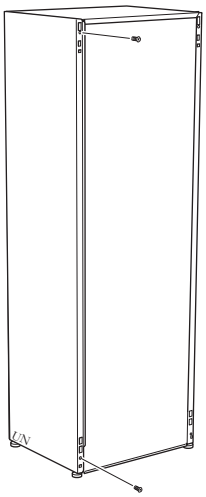

2. Twist the panel slightly outwards.

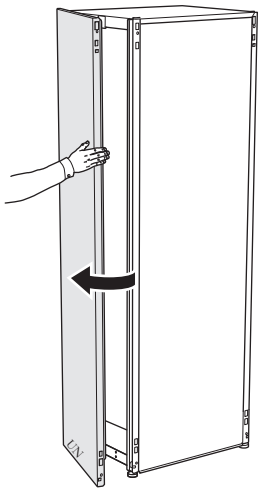

3. Move the panel outwards and backwards.

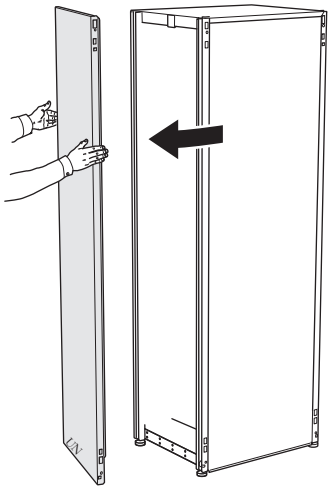

4. Assembly takes place in the reverse order.

The water heater design

PIPE CONNECTIONS

XL3 Cold water connection
XL4 Hot water connection
XL5 Connection, hot water circulation
XL8 Docking connection, supply line (from heat pump)
XL9 Docking connection, return line (to heat pump)
XL29 Connection, T&P valve

HVAC COMPONENTS

FL5 T&P valve
QM22 Venting, charge coil
UA4 Submerged tube for temperature limiter
UA5 Submerged tube for temperature limiter
QQ1 Inspection hatch

SENSORS

BT5 Controlling hot water sensor
BT6 Controlling hot water sensor
BT7 Display hot water sensor

ELECTRICAL COMPONENTS

FQ10 Temperature limiter

MISCELLANEOUS

PZ1 Rating plate
UL Adjustable feet

Designations according to standard EN 81346-2.

Pipe connections

GENERAL

Pipe installation must be carried out in accordance with current norms and directives.

NOTE!

Ensure that incoming water is clean. When using a private well, it may be necessary to supplement with an extra water filter.

CAUTION!

The pipe systems have to be flushed clean before the product is connected, to prevent any contaminants from damaging the components.

CAUTION!

Inspect and clean the water heater via the inspection hatch (QQ1) by using a suitable instrument such as, an endoscope.

CAUTION!

Water may drip from the safety valve's overflow pipe. The overflow pipe must be routed to a suitable drain, to prevent hot water splashes from causing harm. The overflow pipe must be inclined along its entire length to prevent pockets where water can accumulate, and must be frost-proof. The overflow pipe must be at least the same size as the safety valve. The overflow pipe must be visible and its mouth must be open and not placed close to electrical components.

CAUTION!

This installation is subject to building regulation approval, notify the local Authority of intention to install.

CAUTION!

Use only manufacturer's recommended replacement parts.

Waste water from safety valves is led via an unpressurised overflow pipe to the drain, so hot water splashes cannot cause harm.

The mouth of the overflow pipe must be visible and not placed close to electrical components. In addition, the mouth of the overflow pipe (tundish), drain valves and motorised valves should also be positioned well away from all electrical components. This is the only permitted use of unpressurised overflow pipes. Overflow pipes from tundish (WM3) connected to the expansion relief valve (FL1) must also be connected to the drain in the same way.

The connection for the T&P valve (XL29) must not be used for any other purpose. Valves may not be positioned between the T&P valve (FL5) and the water heater.

Overflow pipes from tundish must be routed with a fall and be at least 300 mm long, before bends or angles in the pipework (see image) and must also be frost-proof.

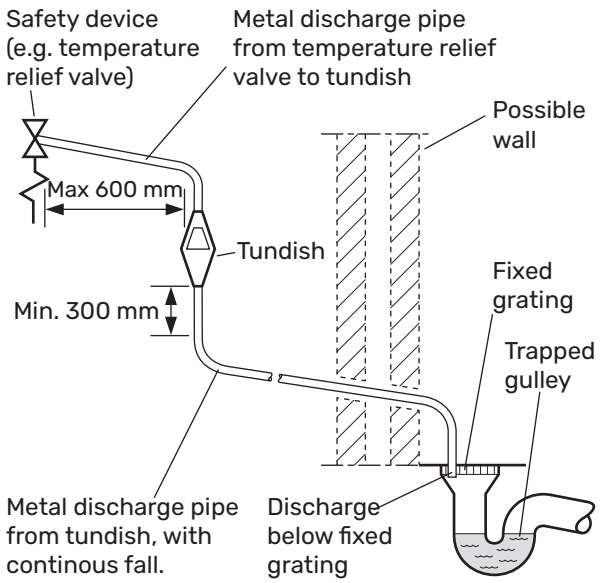

Valve outlet size	Minimum size of discharge pipe	Minimum size of discharge pipe from tundish	Maximum resistance allowed, expressed as a lenght of straight pipe (i.e. no elbows or bends)	Resistance created by each elbow or bend
G1/2	15 mm	22 mm	up to 9 m	0.8 mm
G1/2	15 mm	28 mm	up to 18 m	1.0 mm
G1/2	15 mm	35 mm	up to 27 m	1.4 mm
G3/4	22 mm	28 mm	up to 9 m	1.0 mm
G3/4	22 mm	35 mm	up to 18 m	1.4 mm
G3/4	22 mm	42 mm	up to 27 m	1.7 mm
G1	28 mm	35 mm	up to 9 m	1.4 mm
G1	28 mm	42 mm	up to 18 m	1.7 mm
G1	28 mm	54 mm	up to 27 m	2.3 mm

Table sizing of copper discharge pipe for common temperature relief valve outlet sizes.

Hard water areas

Normally, there should not normally be any problem installing VPB S200/S300 in hard water areas, as the operating temperature is 50–60°C.

Cleaning the climate system

When the water heater and the climate system have been filled with water, VPB S200/S300 must operate at maximum normal temperature for at least one hour. Thereafter the system must be drained of water and refilled.

Before installing the heat pump in an existing system, it is important that the system is properly flushed through.

Even if the heat pump is to be installed in a new system, the heat pump and system should be flushed.

> **CAUTION!**
> Ensure that cleaning agent has been removed from the entire system before adding inhibitor.

After flushing an inhibitor should be used for long-term anti-corrosion protection.

NIBE Energy Systems Limited recommends water treatments, supplied by Fernox, specifically designed for heat pumps.

PIPE DIMENSIONS

VPB S200 / VPB S300

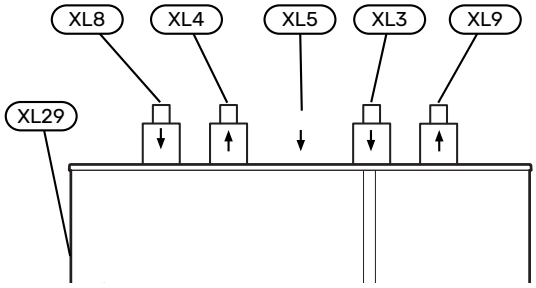

Connection		
XL3 Cold water ϴ	mm	22
XL4 Hot water ϴ	mm	22
XL5 Hot water circulation ϴ	mm	15
XL8 Docking connection, supply line ϴ	mm	22
XL9 Docking connection, return line ϴ	mm	22
XL29 T&P valve ϴ	mm	15

SYMBOL KEY

Symbol	Meaning
	Unit box
	Shut-off valve
	Mixing valve
	Expansion vessel
	Shut off valve
	Safety valve
	T&Pvalve
	Temperature sensor
	Trim valve
	Pressure reduction valve
	Tundish
	Domestic hot water
	Addition
	Hot water circulation
	Heat pump
	Heating system

SYSTEM DIAGRAM

CAUTION!
This is the outline diagram. Actual installations must be planned according to applicable standards.

VPB S200/S300 is a series of water heaters that are suitable for connection to e.g. a heat pump.

Further information about the system principle is available at nibe.eu and in the manuals for the heat sources used.

VPB S200 / VPB S300

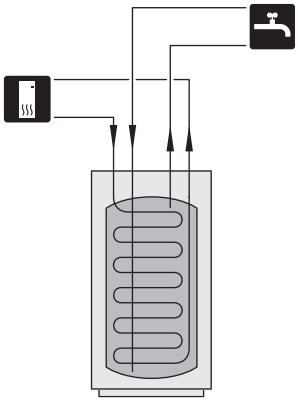

T&P VALVE

The enclosed cover disc and a pipe for the T&P valve have to be fitted in the connection for T&P valve (XL29).

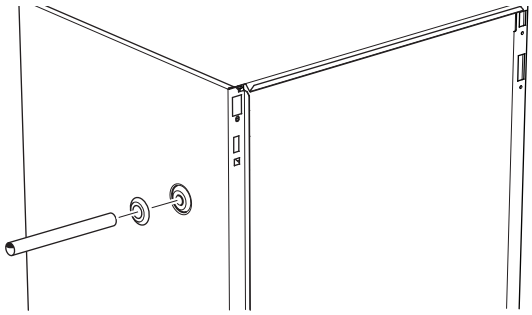

TO HEAT PUMP

VPB S200/S300 may only be docked with a NIBE heat pump, for example NIBE S1156.

The heat pump's supply and return lines are connected to docking connection, supply (XL8) and docking connection, return (XL9) on VPB S200/S300.

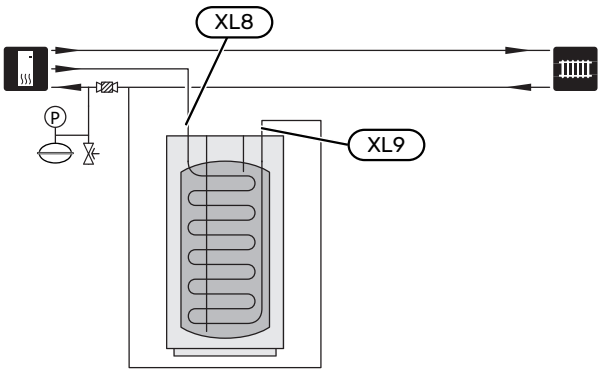

COLD AND HOT WATER

Stop temperature for hot water must be at least 60°C.

Connecting cold and hot water

Install as follows:

- shut-off valve
- mixing valve

  A mixing valve must be installed when the factory setting for hot water is changed. National regulations must be observed.
- enclosed valve connector containing pressure relief valve (QN17), expansion relief valve (FL1) and non-return valve (RM1)
- enclosed expansion vessel (CM4)

  The expansion vessel (CM4) accommodates expansion that results from heating the water inside the unit. The expansion vessel must be connected between the expansion relief valve (FL1) and the water heater. The location of the expansion vessel should allow access to recharge the pressure when neccessary.
- enclosed tundish (WM3)

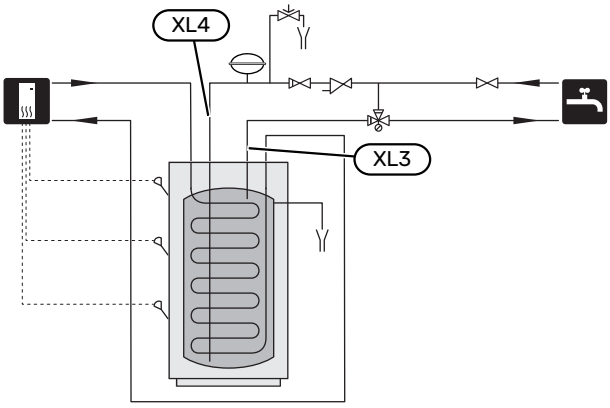

HOT WATER CIRCULATION (HWC)

A circulation pump can be controlled by the main product to circulate the hot water. The circulating water must have a temperature that prevents bacterial growth and scalding, and national standards must be met.

The HWC return is connected to the HWC connection (XL5).

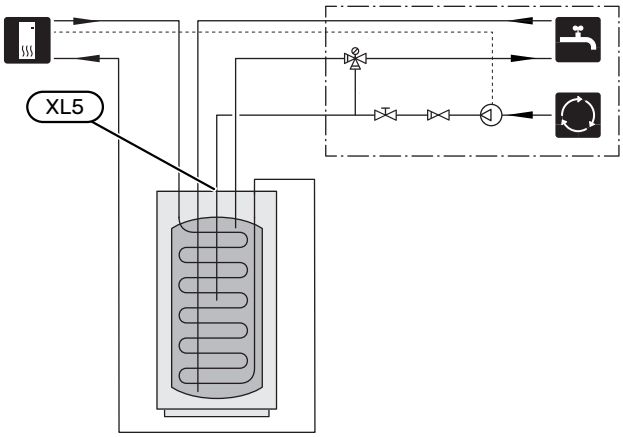

Electrical installation

GENERAL

Electrical installation and wiring must be carried out in accordance with national provisions.

> **CAUTION!**
>
> Electrical installation and any servicing must be carried out under the supervision of a qualified electrician. Turn off the power with the circuit breaker before servicing.

TEMPERATURE LIMITER

Power supply to temperature limiter (FQ10) is 230 V.

Temperature limiter (FQ10) is connected electrically to the solenoids, one for each heat source.

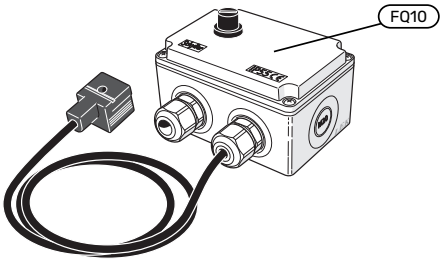

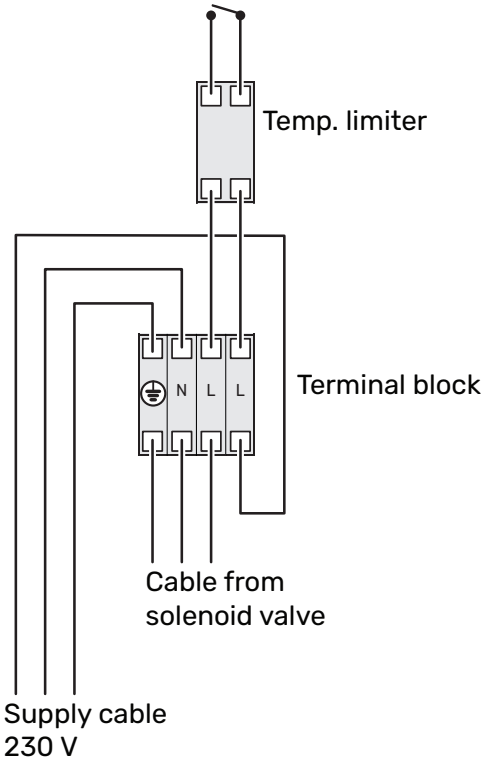

Temperature limiter wiring diagram

Commissioning and adjusting

FILLING AND VENTING

> **CAUTION!**
> At the time of commissioning, complete all relevant sections of the Benchmark Checklist located at the back of this document.
>
> Completion of the Benchmark Checklist is a condition of warranty. For full terms and conditions of warranty, please see our website nibe.co.uk.

Filling the hot water heater

1. Open a hot water tap in the house.
2. Fill the hot water heater through the cold water connection (XL3).
3. When the water that comes out of the hot water tap is no longer mixed with air, the water heater is full and the hot water tap can be closed.

Topping up the charge coil

1. Open the externally mounted filling valve. Fill the coil in the hot water heater and the rest of the climate system with water.
2. Open the vent valve (QM22).
3. When the water that exits the vent valve (QM22) is not mixed with air, close the valve. After a while, the pressure starts to rise.
4. Close the filling valve when the correct pressure is obtained.

Venting the charge coil

1. Vent the coil via the vent valve (QM22) and the rest of the climate system via the relevant vent valves.
2. Keep topping up and venting until all air has been removed and the pressure is correct.

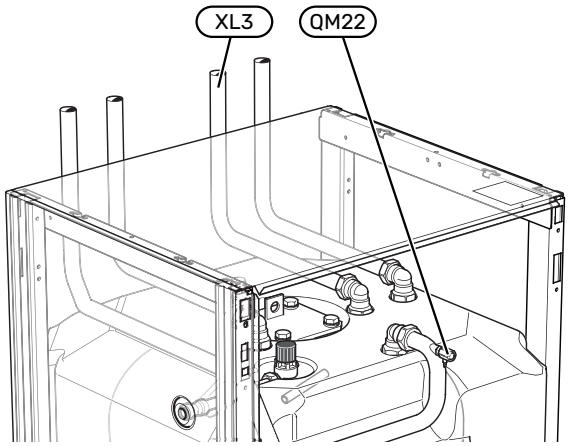

START-UP AND INSPECTION

Pressure drop diagram, charge coil

Docking connection, supply line (XL8) and docking connection, return line (XL9).

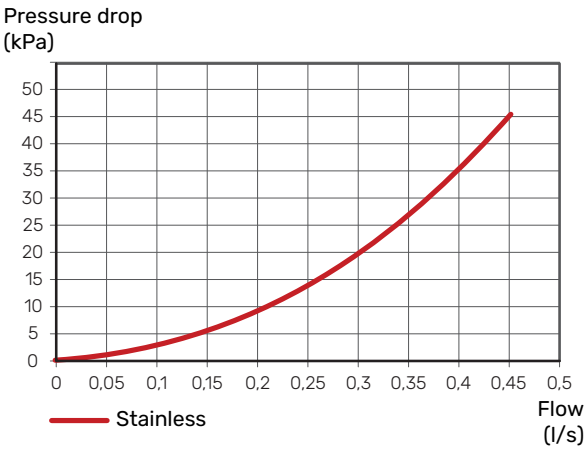

Service and maintenance

CAUTION!

After servicing, complete the relevant Service Interval Record section of the Benchmark Checklist located at the back of this document.

Completion of the Service Interval Record is a condition of warranty. For full terms and conditions of warranty, please see our website nibe.co.uk.

CAUTION!

Maintenance may only be carried out by persons with the necessary expertise.

When replacing components on VPB S200/S300 only replacement parts from NIBE may be used.

CAUTION!

Use only manufacturer's recommended replacement parts.

MAINTENANCE

General inspection

Check the following:

1. Condition of casing.
2. Electrical connections.
3. Pipe connections.

Correct any fault before continuing.

Water heater

Check the following:

1. Pressure controlled bypass valve.
2. T&P valve.
3. Overflow pipe.
4. Pressure expansion vessel.
5. Expansion relief valve.

Correct any fault before continuing.

SERVICE ACTIONS

Safety valves

The function of the safety valves must be checked regularly. Perform checks as follows:

1. Open the valve by turning the knob anti-clockwise carefully.
2. Check that water flows through the valve.
3. Close the valve by releasing it. If it does not close automatically when released, turn it anti-clockwise slightly.

Cleaning

Inspect and clean the water heater via the inspection hatch (QQ1) by using a suitable instrument such as, an endoscope.

When the water heater and the climate system have been filled with water, VPB S200/S300 must operate at maximum normal temperature for at least one hour. Thereafter the system must be drained of water and refilled.

Empty the system by:

1. Open external filler valve and external drain valve.
2. Flush the system for some minute. Watch out for water splashes from the safety valve.
3. Close the valves and check the stainer.

Emptying

The water heater is emptied through the siphon (with hose) in the cold water connection (XL3).

Drain the coil section through the siphon (with hose) on the docking connection, return to heat pump (XL9).

VPB S200 / VPB S300

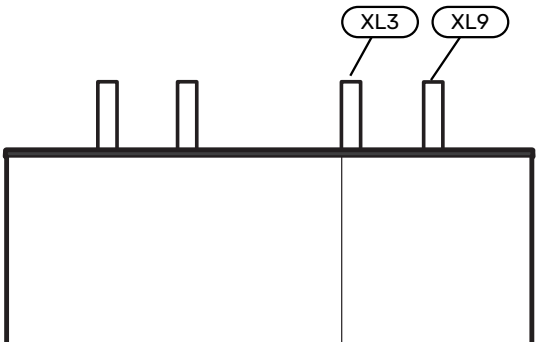

Technical data

Dimensions

VPB S200

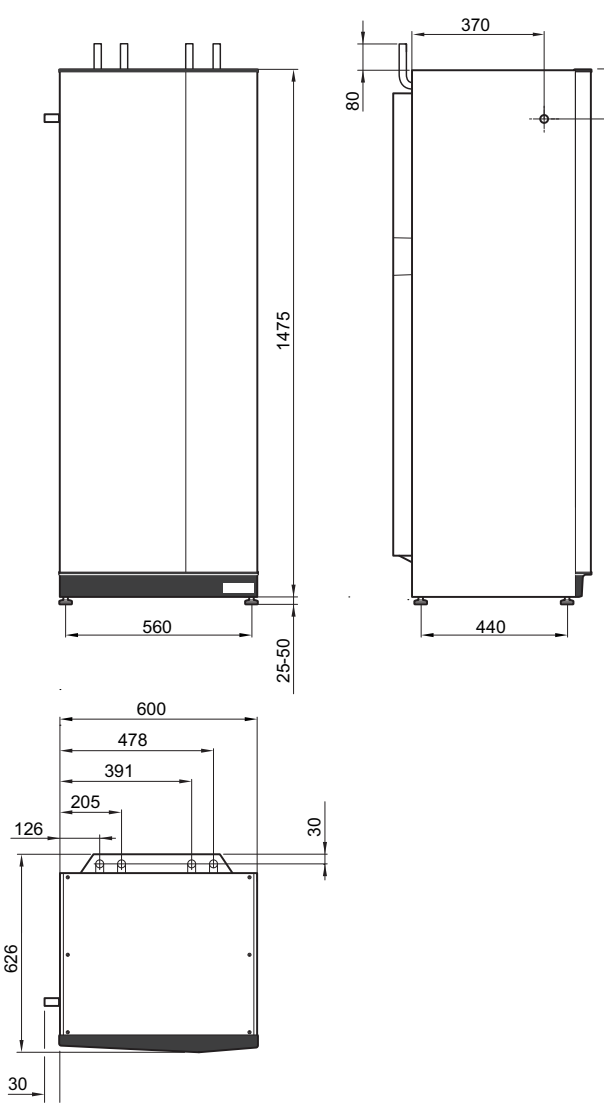

VPB S300

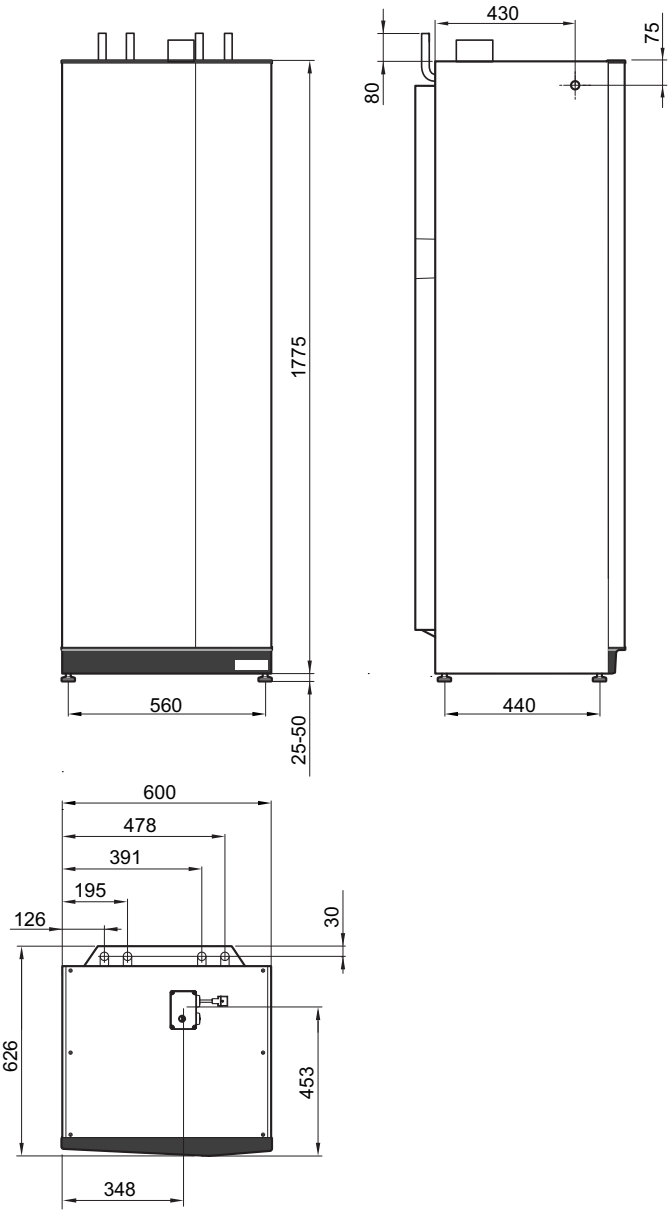

Technical specifications

VPB S200		Stainless
Heating medium circuit		
Max pressure in the heating medium circuit	bar/MPa	0.3 (3)
Pipe connections		
Hot water ext Ø	mm	22
Cold water ext Ø	mm	22
Hot water circulation ext Ø	mm	15
Docking ext Ø	mm	22
Hot water and heating section		
Volume coil	litre	7.8
Volume hot water heater	litre	175
Surface area coil	m^2	1,66
Tested according to EN 12897:2016+A1:2020		
Max operating temperature	°C	85
Maximum water supply pressure	MPa (bar)	1.6 (16)
Operating pressure, tap water	MPa (bar)	0.6 (6)
Expansion vessel, tap water, precharge pressure	MPa (bar)	0.35 (3.5)
Volume expansion vessel (external)	litre	18
Pressure reduction valve, setting	MPa (bar)	0.35 (3.5)
Max design pressure	MPa (bar)	0.6 (6)
Opening pressure T&P-valve	MPa (bar)	0.7 (7)
Max operating temperature T&P-valve	°C	95
Set opening pressure expansion relief valve	MPa (bar)	0.6 (6)
Heating time (12 °C to 62 °C) [1]	minutes	16.5
Equivalent amount of hot water (40 °C) [2]	litre	232
Heat loss	kWh/24 h	1.76
Dimensions and weight		
Width	mm	600
Depth	mm	626
Height	mm	1500
Ceiling height	mm	1670 [3]
Net weight	kg	80
Mass unit, filled with water	kg	255
Part No.		081 245

1 At charge temperature 80 °C and flow 0.28 l/s.

2 At incoming temperature 10 °C and a domestic water flow of 0.25 l/s.

3 Med fötterna avmonterade blir reshöjden ca. 1650 mm.

VPB S300		Stainless
Heating medium circuit		
Max pressure in the heating medium circuit	bar/MPa	0.3 (3)
Pipe connections		
Hot water ext Ø	mm	22
Cold water ext Ø	mm	22
Hot water circulation ext Ø	mm	15
Docking ext Ø	mm	22
Hot water and heating section		
Volume coil	litre	8.8
Volume hot water heater	litre	276
Surface area coil	m^2	1,87
Tested according to EN 12897:2016+A1:2020		
Max operating temperature	°C	85
Maximum water supply pressure	MPa (bar)	1.6 (16)
Operating pressure, tap water	MPa (bar)	0.6 (6)
Expansion vessel, tap water, precharge pressure	MPa (bar)	0.35 (3.5)
Volume expansion vessel (external)	litre	18
Pressure reduction valve, setting	MPa (bar)	0.35 (3.5)
Max design pressure	MPa (bar)	0.6 (6)
Opening pressure T&P-valve	MPa (bar)	0.7 (7)
Max operating temperature T&P-valve	°C	95
Set opening pressure expansion relief valve	MPa (bar)	0.6 (6)
Heating time (12 °C to 62 °C)[1]	minutes	27
Equivalent amount of hot water (40 °C)[2]	litre	455
Heat loss	kWh/24 h	2.11
Dimensions and weight		
Width	mm	600
Depth	mm	626
Height	mm	1800
Ceiling height	mm	1950[3]
Net weight	kg	125
Mass unit, filled with water	kg	410
Part No.		081 147

1 At charge temperature 80 °C and flow 0.28 l/s.

2 At incoming temperature 10 °C and a domestic water flow of 0.5 l/s.

3 Med fötterna avmonterade blir reshöjden ca. 1930 mm.

Energy labelling

Supplier		NIBE	
Model		**VPB S200 R**	**VPB S300 R**
Efficiency class[1]		**C**	**C**
Heat loss	W	62	88
Volume	l	176	276

1 Scale for the product's efficiency class A+ to F.

MAINS PRESSURE HOT WATER STORAGE SYSTEM COMMISSIONING CHECKLIST

This Commissioning Checklist is to be completed in full by the competent person who commissioned the storage system as a means of demonstrating compliance with the appropriate Building Regulations and then handed to the customer to keep for future reference.

Failure to install and commission this equipment to the manufacturer's instructions may invalidate the warranty but does not affect statutory rights.

Customer Name _____ Telephone Number _____

Address _____

Cylinder Make and Model _____

Cylinder Serial Number

Commissioned by *(print name)* _____ Registered Operative ID Number _____

Company Name _____ Telephone Number _____

Company Address _____

_____ Commissioning Date _____

To be completed by the customer on receipt of a Building Regulations Compliance Certificate*:

Building Regulations Notification Number *(if applicable)* _____

ALL SYSTEMS PRIMARY SETTINGS (indirect heating only)

Is the primary circuit a sealed or open vented system?	Sealed ☐	Open ☐	
What is the maximum primary flow temperature?			°C

ALL SYSTEMS

What is the incoming static cold water pressure at the inlet to the system?				bar
Has a strainer been cleaned of installation debris (if fitted)?	Yes ☐		No ☐	
Is the installation in a hard water area (above 200ppm)?	Yes ☐		No ☐	
If yes, has a water scale reducer been fitted?	Yes ☐		No ☐	
What type of scale reducer has been fitted?				
What is the hot water thermostat set temperature?				°C
What is the maximum hot water flow rate at set thermostat temperature (measured at high flow outlet)?				l/min
Time and temperature controls have been fitted in compliance with Part L of the Building Regulations?			Yes ☐	
Type of control system (if applicable)	Y Plan ☐	S Plan ☐	Other ☐	
Is the cylinder solar (or other renewable) compatible?	Yes ☐		No ☐	
What is the hot water temperature at the nearest outlet?				°C
All appropriate pipes have been insulated up to 1 metre or the point where they become concealed			Yes ☐	

UNVENTED SYSTEMS ONLY

Where is the pressure reducing valve situated (if fitted)?				
What is the pressure reducing valve setting?				bar
Has a combined temperature and pressure relief valve and expansion valve been fitted and discharge tested?	Yes ☐		No ☐	
The tundish and discharge pipework have been connected and terminated to Part G of the Building Regulations			Yes ☐	
Are all energy sources fitted with a cut out device?	Yes ☐		No ☐	
Has the expansion vessel or internal air space been checked?	Yes ☐		No ☐	

THERMAL STORES ONLY

What store temperature is achievable?		°C
What is the maximum hot water temperature?		°C

ALL INSTALLATIONS

The hot water system complies with the appropriate Building Regulations	Yes ☐
The system has been installed and commissioned in accordance with the manufacturer's instructions	Yes ☐
The system controls have been demonstrated to and understood by the customer	Yes ☐
The manufacturer's literature, including Benchmark Checklist and Service Record, has been explained and left with the customer	Yes ☐

Commissioning Engineer's Signature _____

Customer's Signature _____

(To confirm satisfactory demonstration and receipt of manufacturer's literature)

*All installations in England and Wales must be notified to Local Authority Building Control (LABC) either directly or through a Competent Persons Scheme. A Building Regulations Compliance Certificate will then be issued to the customer.

benchmark COLLECTIVE MARK
THE MARK OF QUALITY FOR THE INSTALLATION, COMMISSIONING AND SERVICING OF DOMESTIC HEATING AND HOT WATER SYSTEMS

©Heating and Hotwater Industry Council (HHIC)

SERVICE RECORD

It is recommended that your hot water system is serviced regularly and that the appropriate Service Record is completed.

Service Provider
Before completing the appropriate Service Record below, please ensure you have carried out the service as described in the manufacturer's instructions.

SERVICE 1 Date
Engineer Name
Company Name
Telephone Number
Comments
Signature

SERVICE 2 Date
Engineer Name
Company Name
Telephone Number
Comments
Signature

SERVICE 3 Date
Engineer Name
Company Name
Telephone Number
Comments
Signature

SERVICE 4 Date
Engineer Name
Company Name
Telephone Number
Comments
Signature

SERVICE 5 Date
Engineer Name
Company Name
Telephone Number
Comments
Signature

SERVICE 6 Date
Engineer Name
Company Name
Telephone Number
Comments
Signature

SERVICE 7 Date
Engineer Name
Company Name
Telephone Number
Comments
Signature

SERVICE 8 Date
Engineer Name
Company Name
Telephone Number
Comments
Signature

SERVICE 9 Date
Engineer Name
Company Name
Telephone Number
Comments
Signature

SERVICE 10 Date
Engineer Name
Company Name
Telephone Number
Comments
Signature

NIBE Energy Systems Ltd
3C Broom Business Park,
Bridge Way, S41 9QG Chesterfield
Tel: +44 (0)330 311 2201
info@nibe.co.uk
nibe.co.uk

CHB EN 2424-4 531237

This is a publication from NIBE Energy Systems. All product illustrations, facts and data are based on the available information at the time of the publication's approval.

NIBE Energy Systems makes reservations for any factual or printing errors in this publication.

©2024 NIBE ENERGY SYSTEMS

531237