ICONX

It is highly recommended that you visit
www.metalearth.com/360/icx117
to see the completed model before assembling your own

Metal Earth
3D METAL MODEL KITS

ICX117

Yamato Battleship

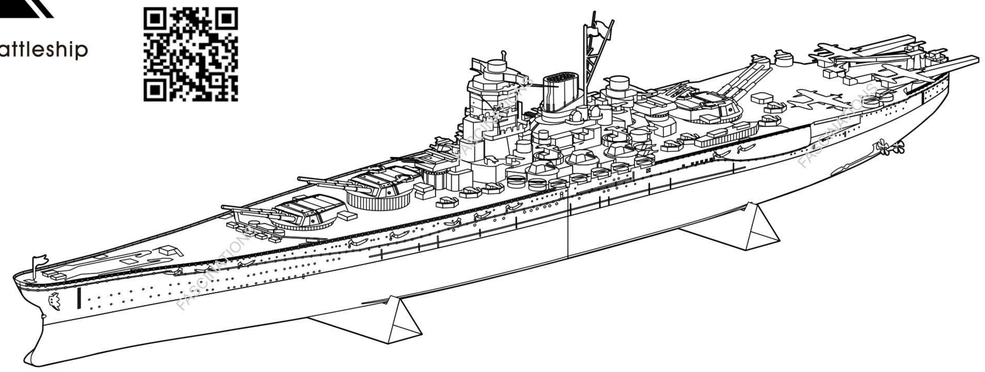

TO CREATE THE BEST CONNECTIONS

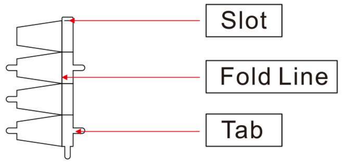

Legends:

- E — Engraved side
- NE — Non-engraved side
- P — Painted side
- Attention point
- Insert tab and bend 90 degrees
- Insert tab and twist 90 degrees

Assembly tip:

If needed, slightly twist tabs to hold parts together then untwist and bend them down for a nice finish

Recommended tools:

-Wire cutters: helpful for taking parts from the metal sheets.

-Tweezers or needle nose pliers: helpful for folding parts, bending and twisting tabs.

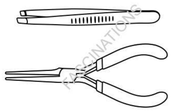

METAL SHEETS

D

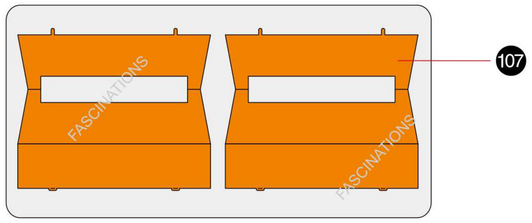

ASSEMBLY STEPS

Step 1

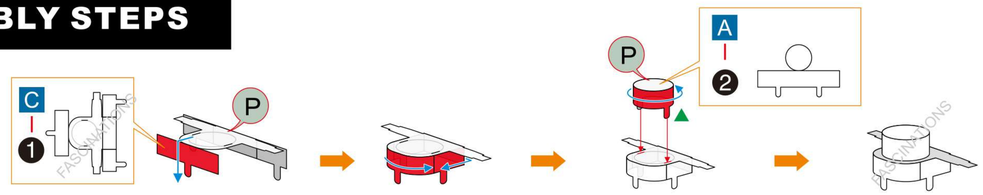

In order to avoid possible injury from sharp edges, please carefully discard the metal sheets after parts have been removed.

Go to www.metalearth.com/360/icx117 to see the zoomable PDF version of this instruction sheet

METAL SHEETS

Parts that are in the same color are duplicates

A

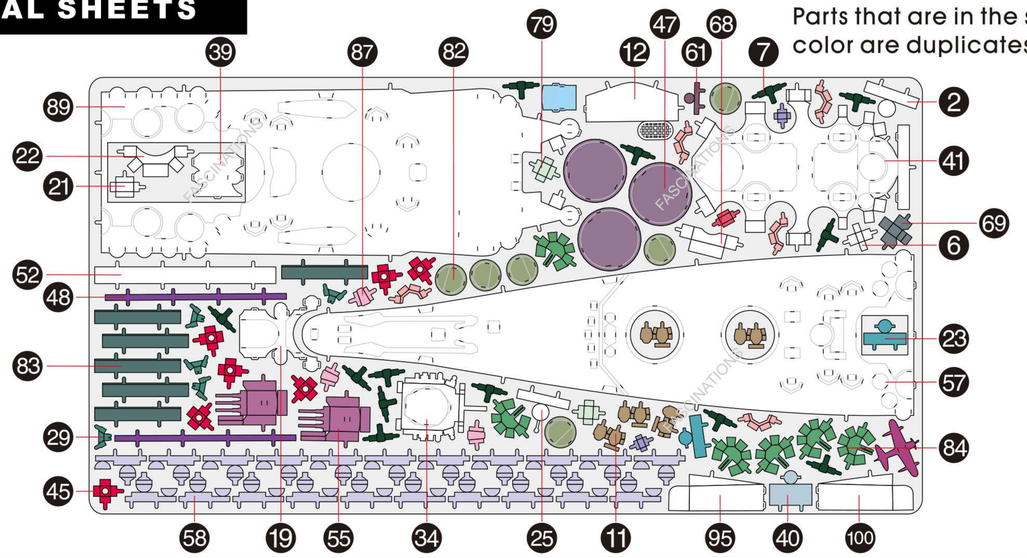

B

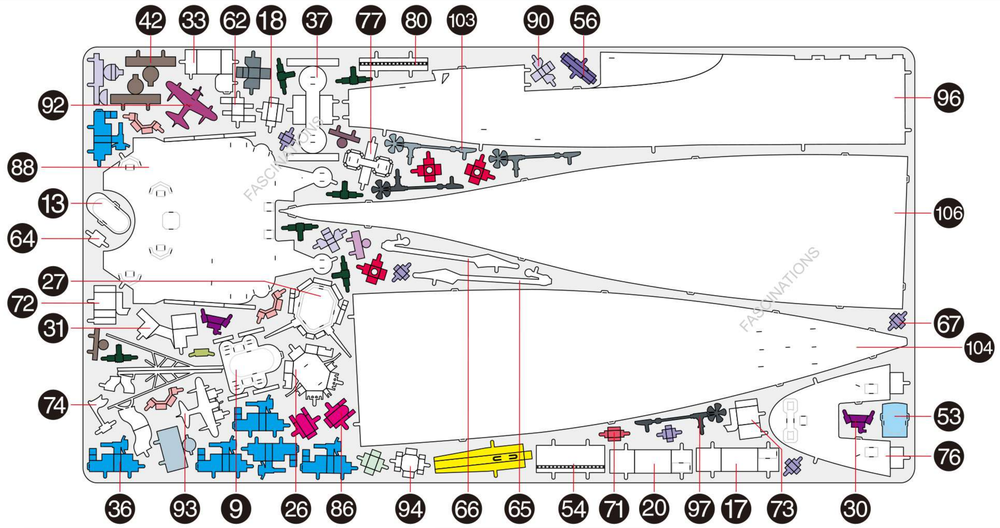

C

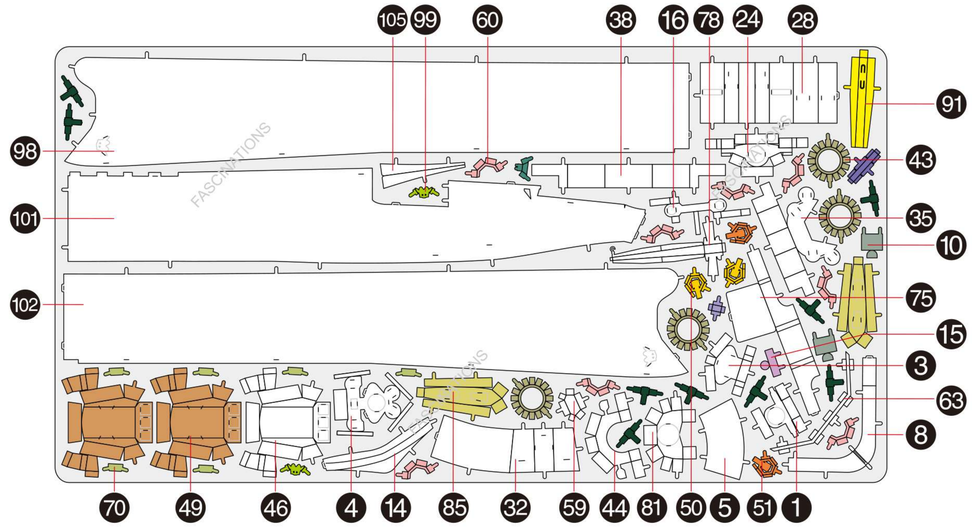

Gun barrel

×9

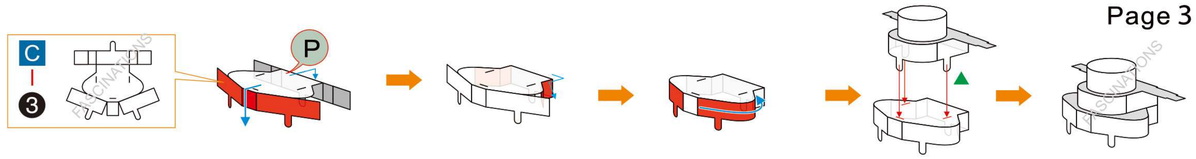

Step 2

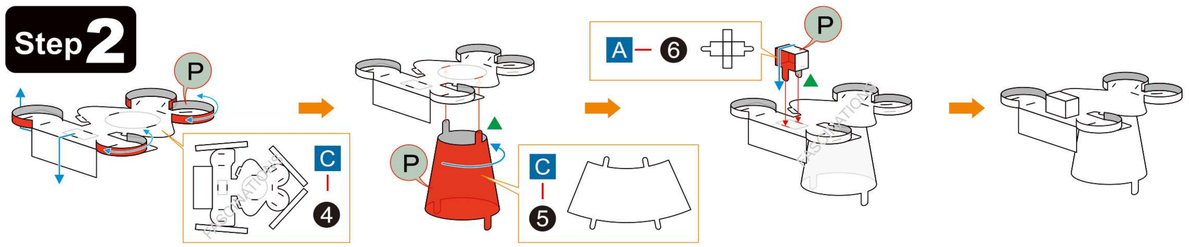

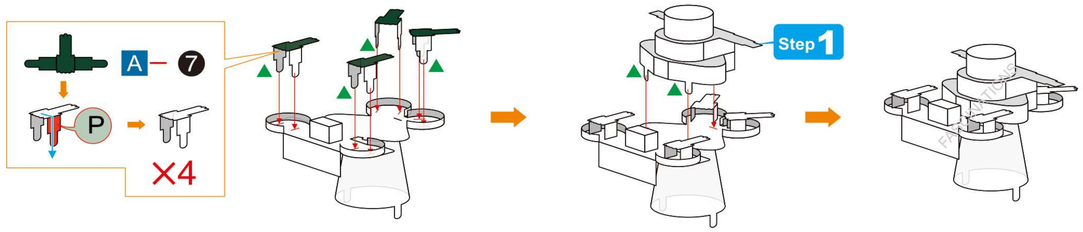

Step 3

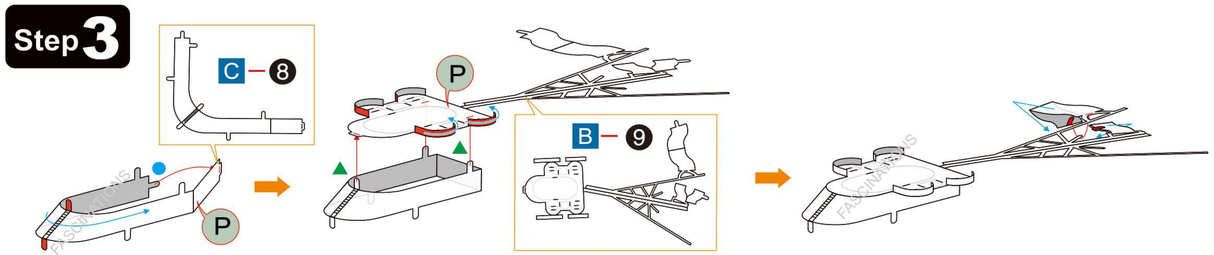

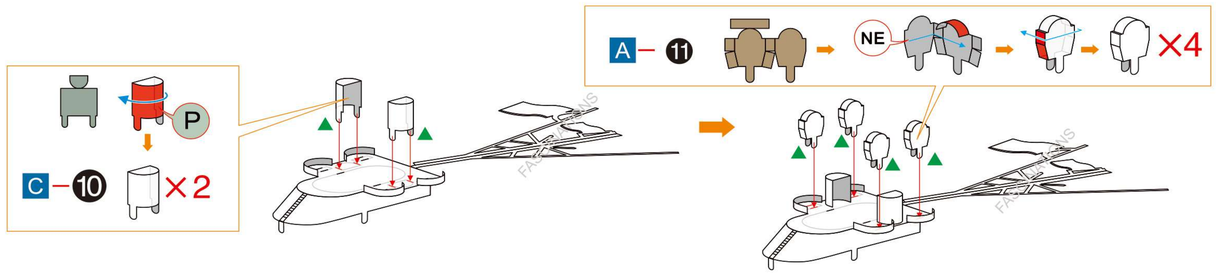

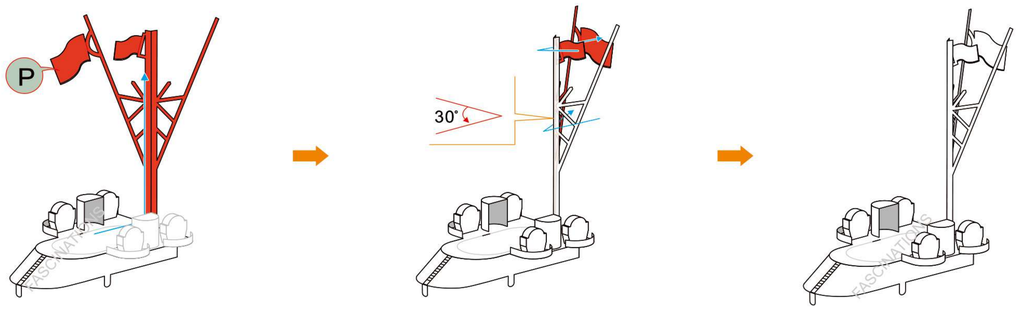

Step 4

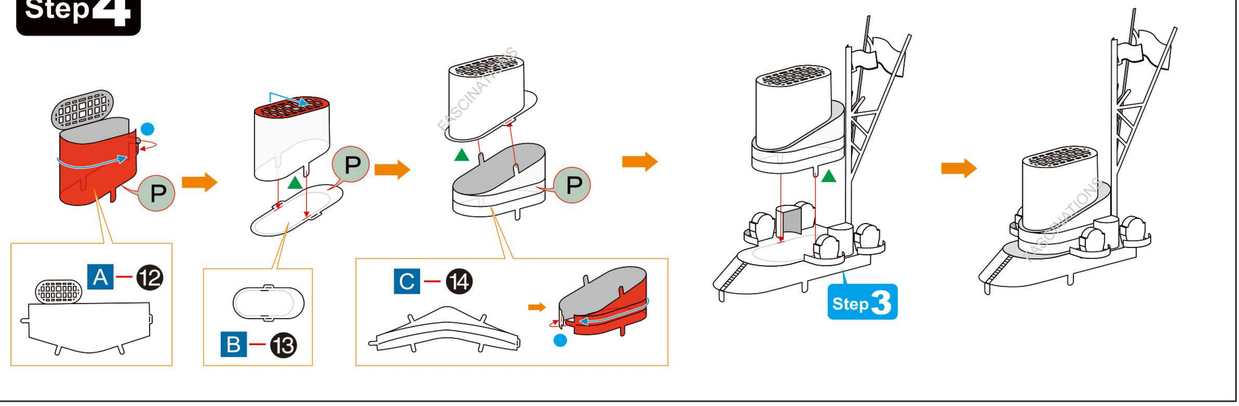

Step 5

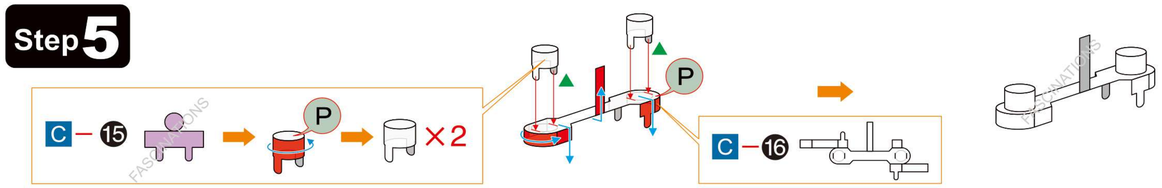

Step 6

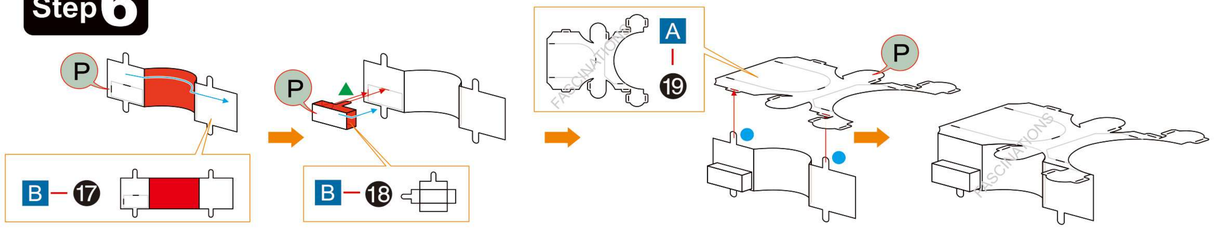

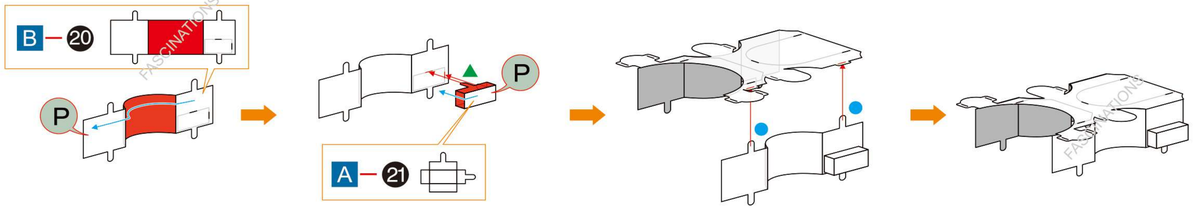

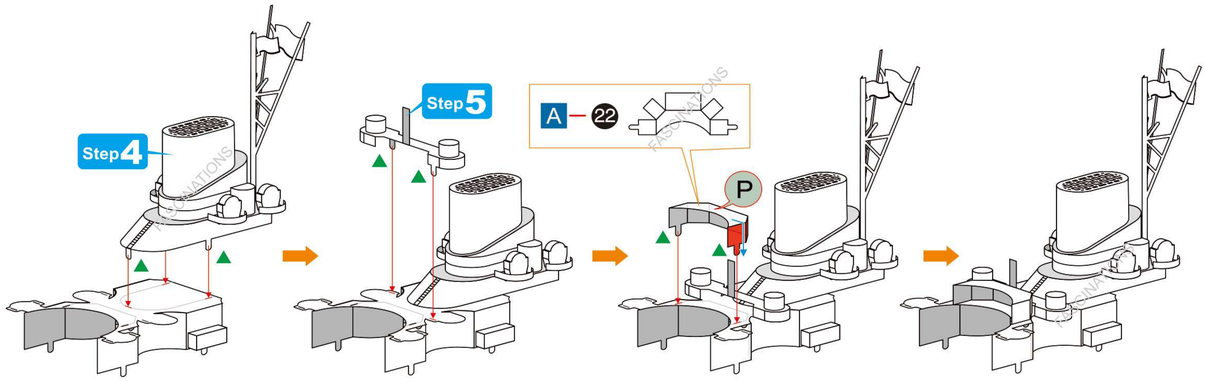

Step 7

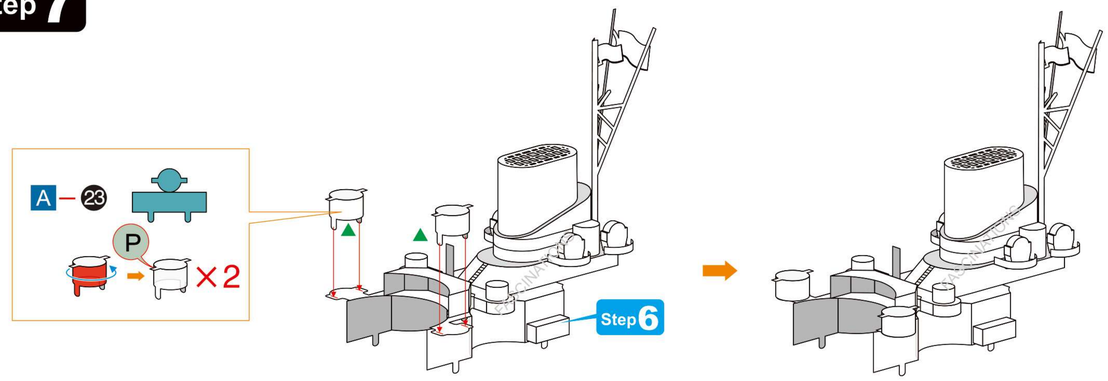

Step 8

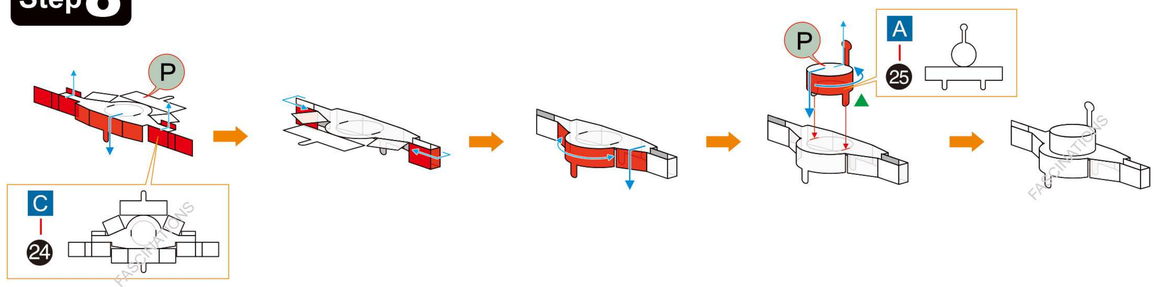

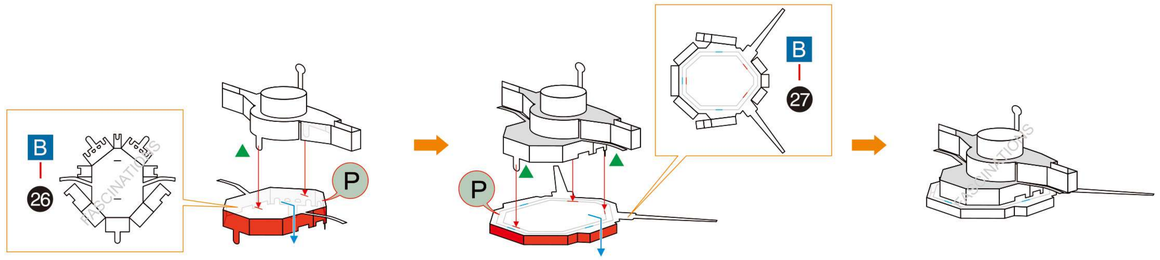

Step 9

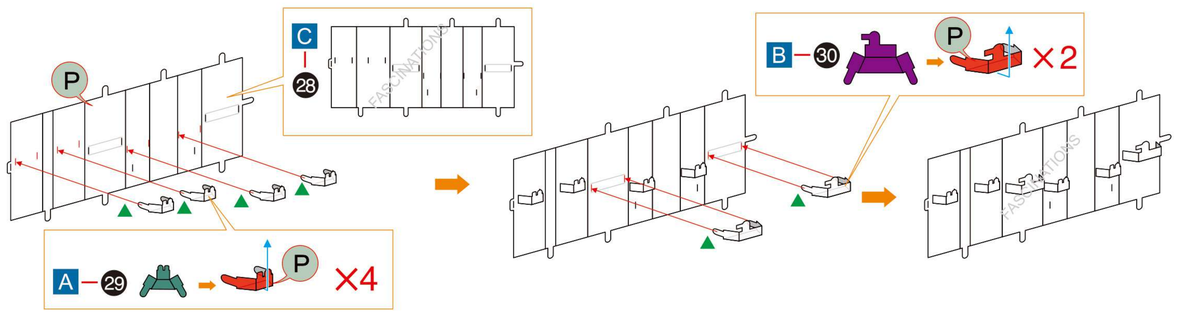

Step 10

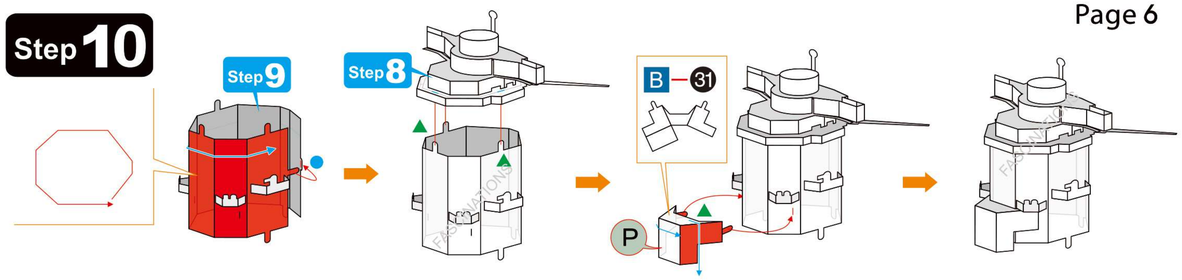

Step 11

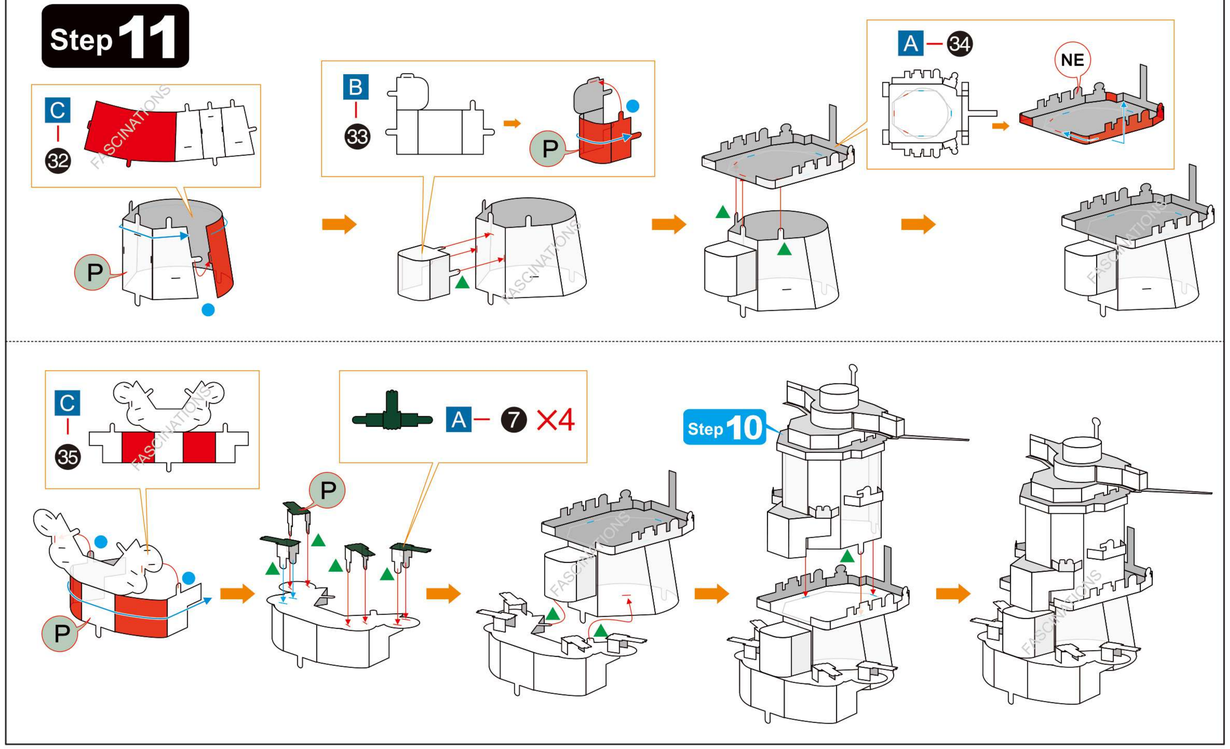

Step 12

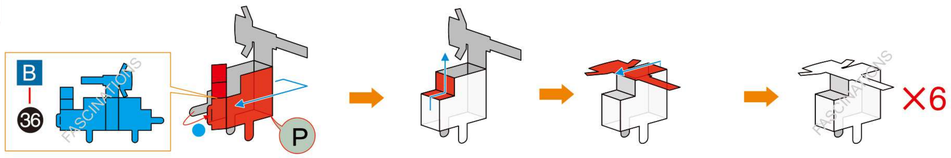

Step 13

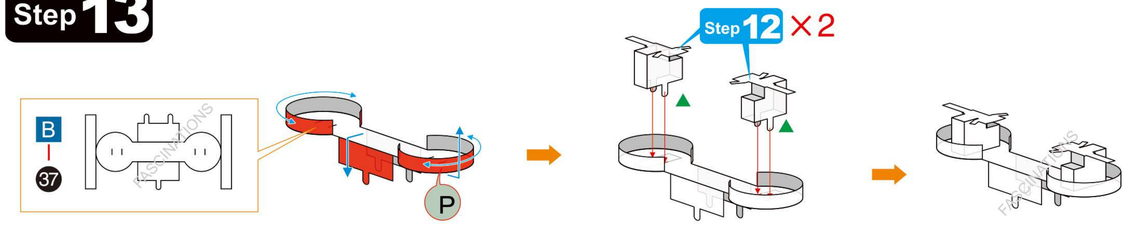

Step 14

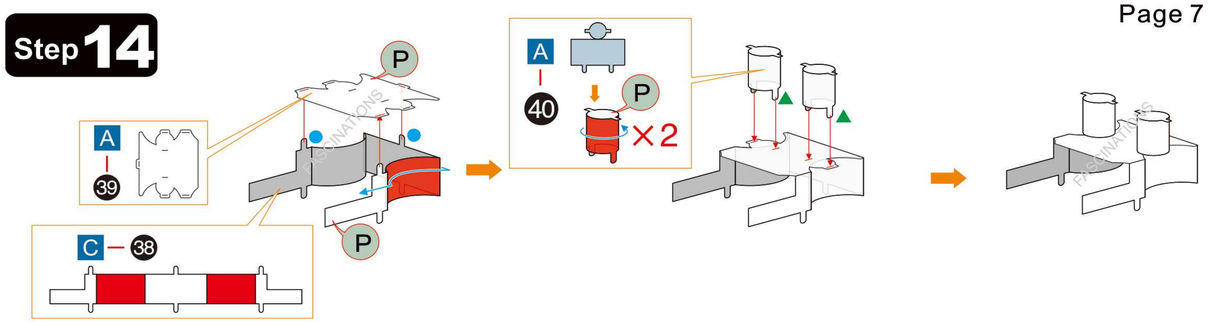

Step 15

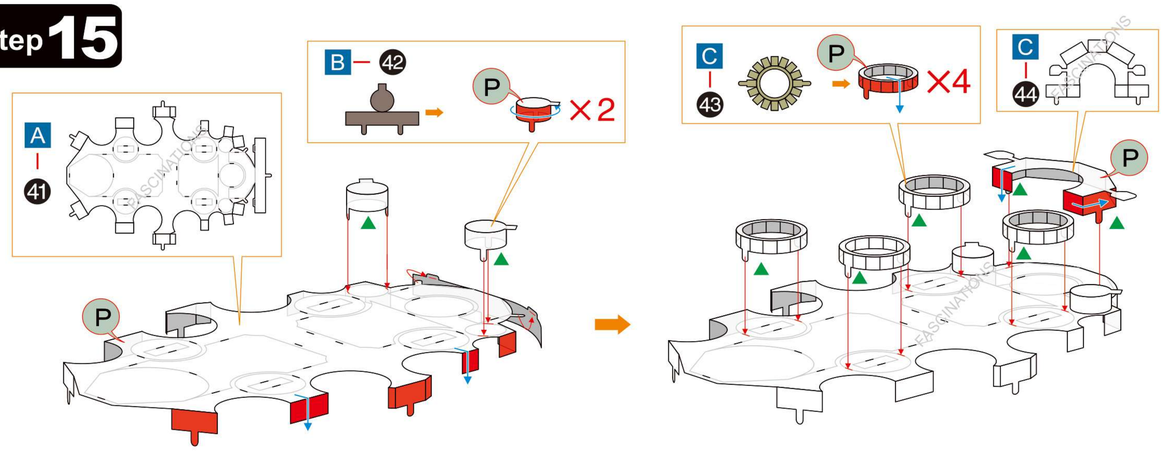

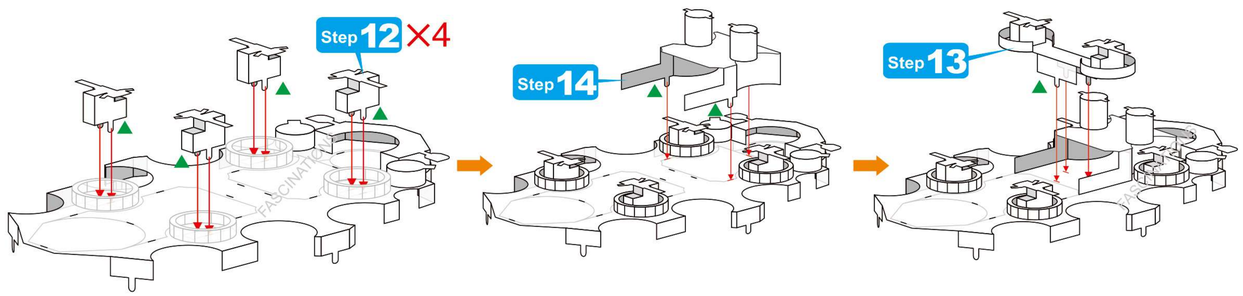

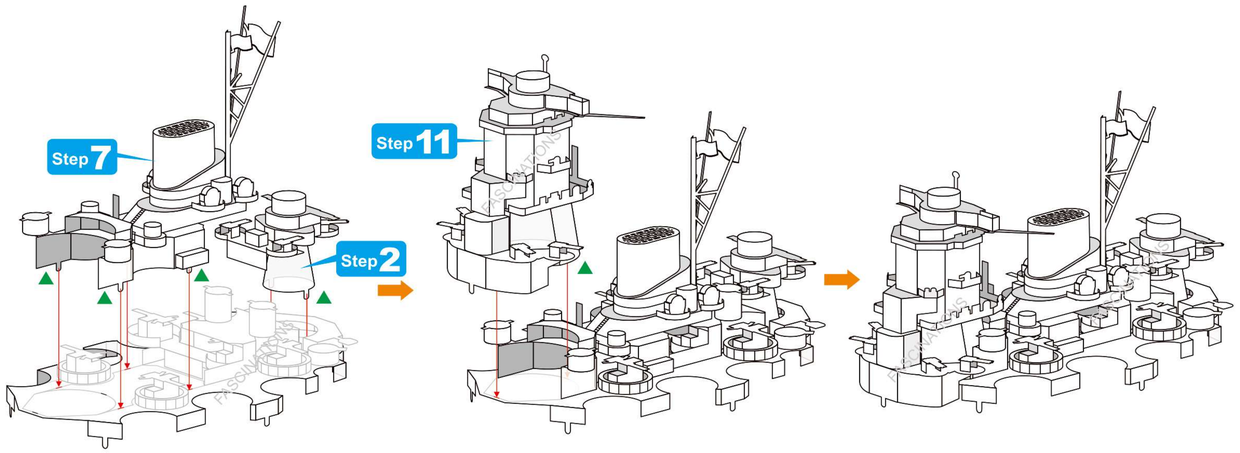

Step 16

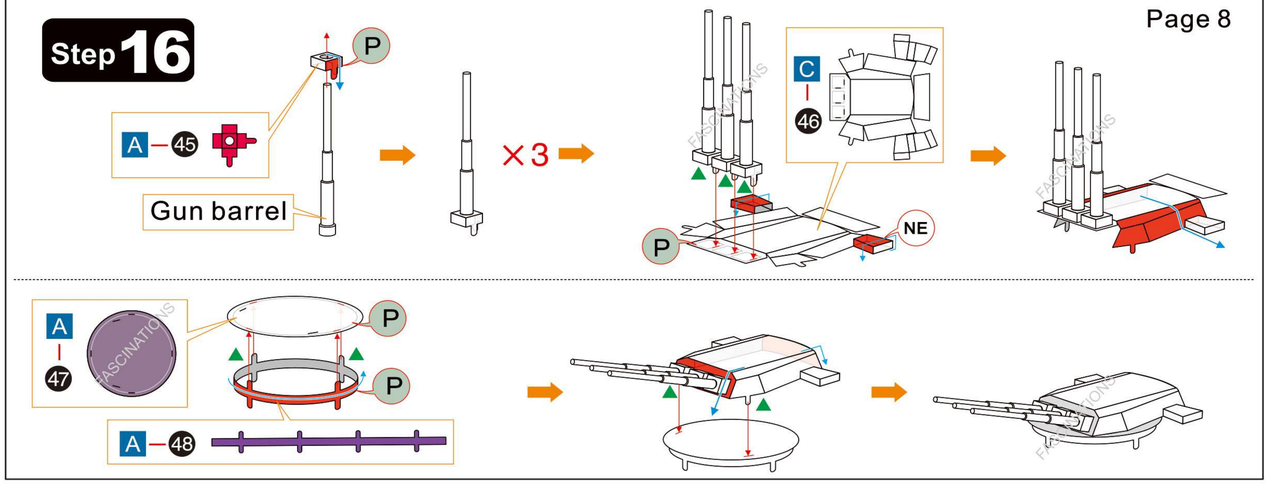

Step 17

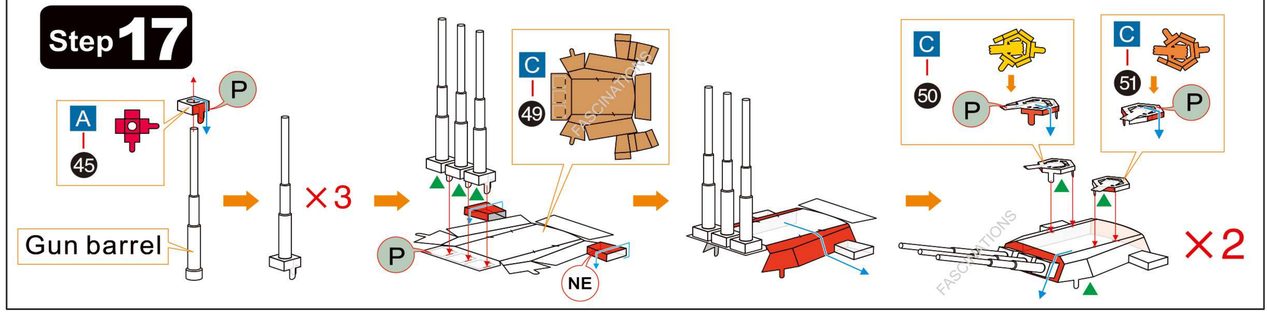

Step 18

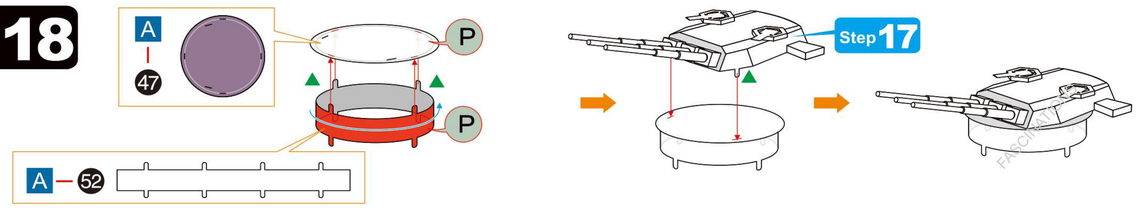

Step 19

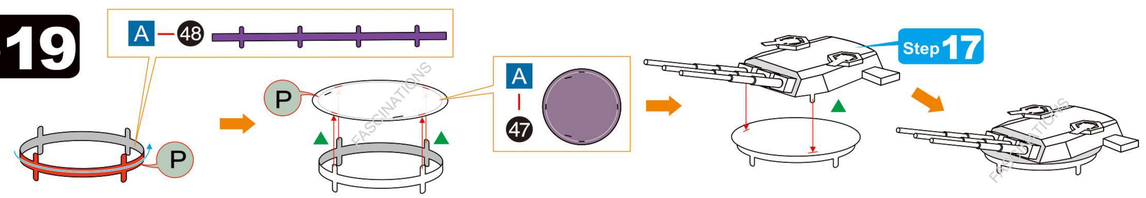

Step 20

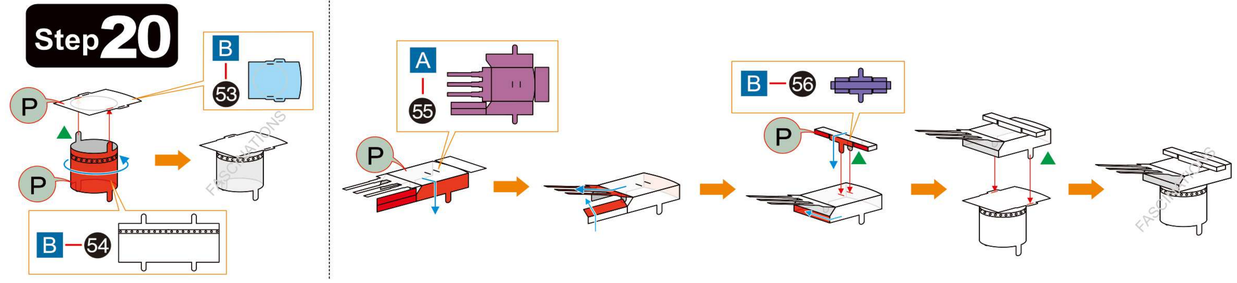

Step 21

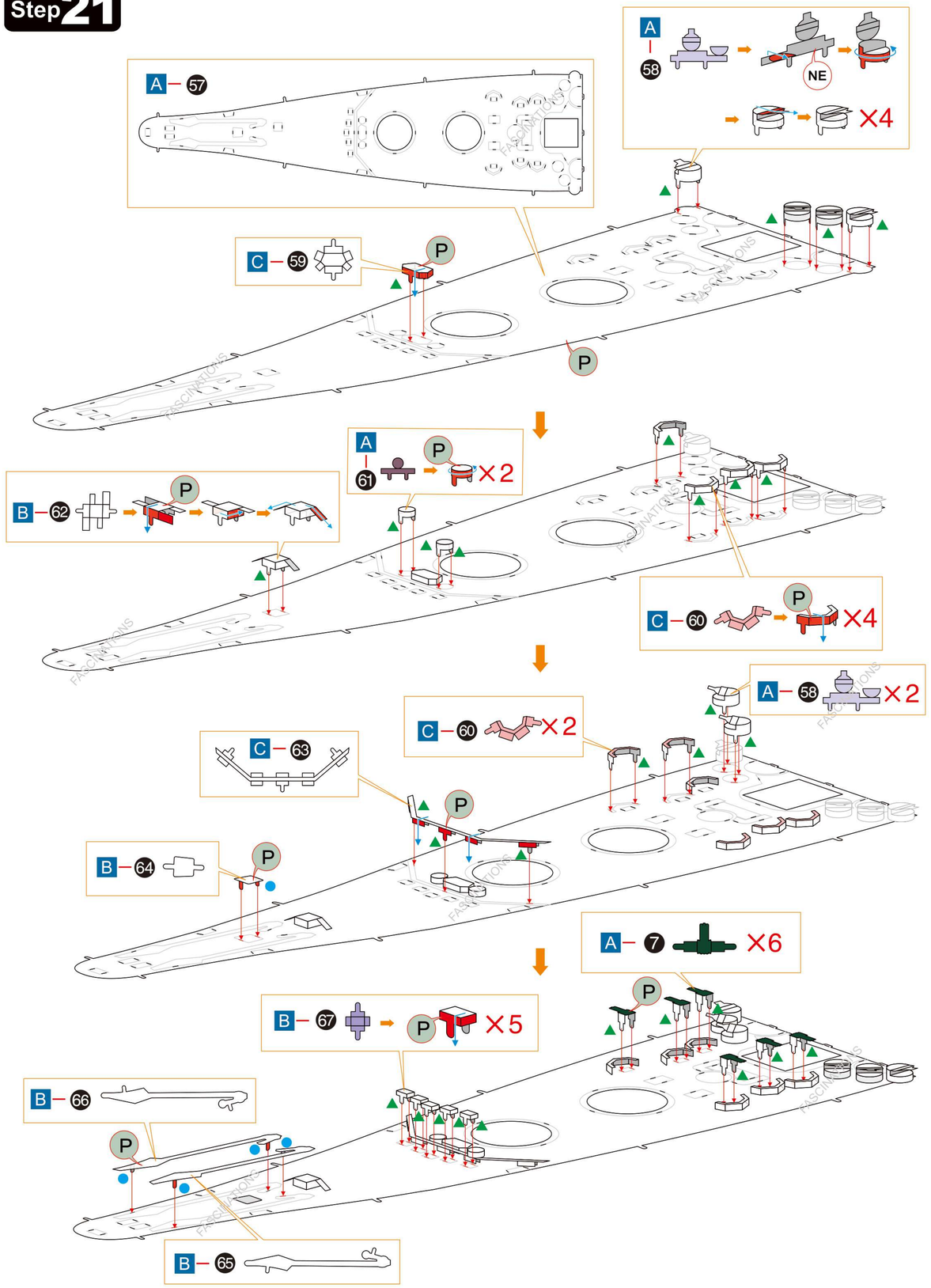

Step 22

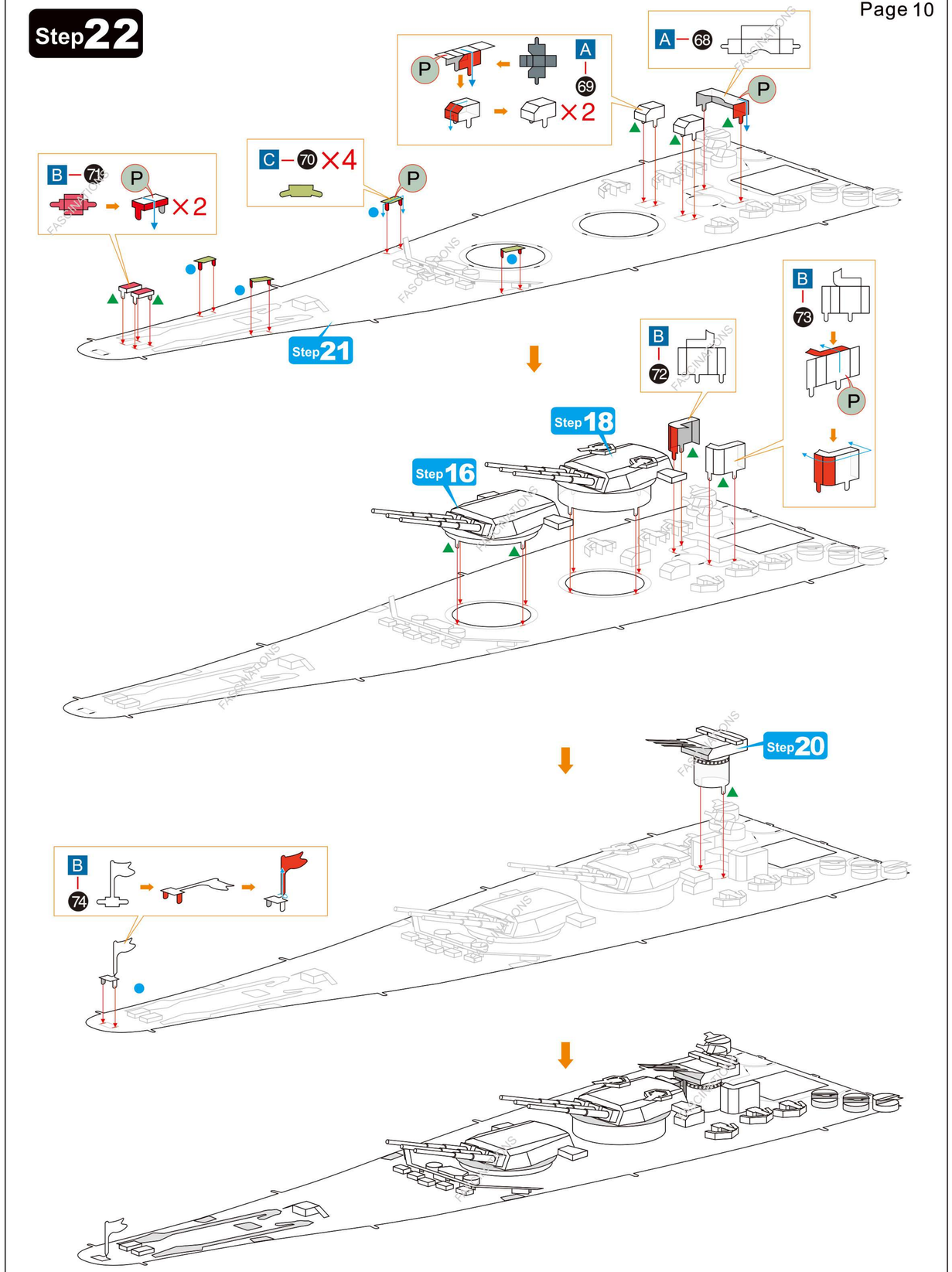

Step23

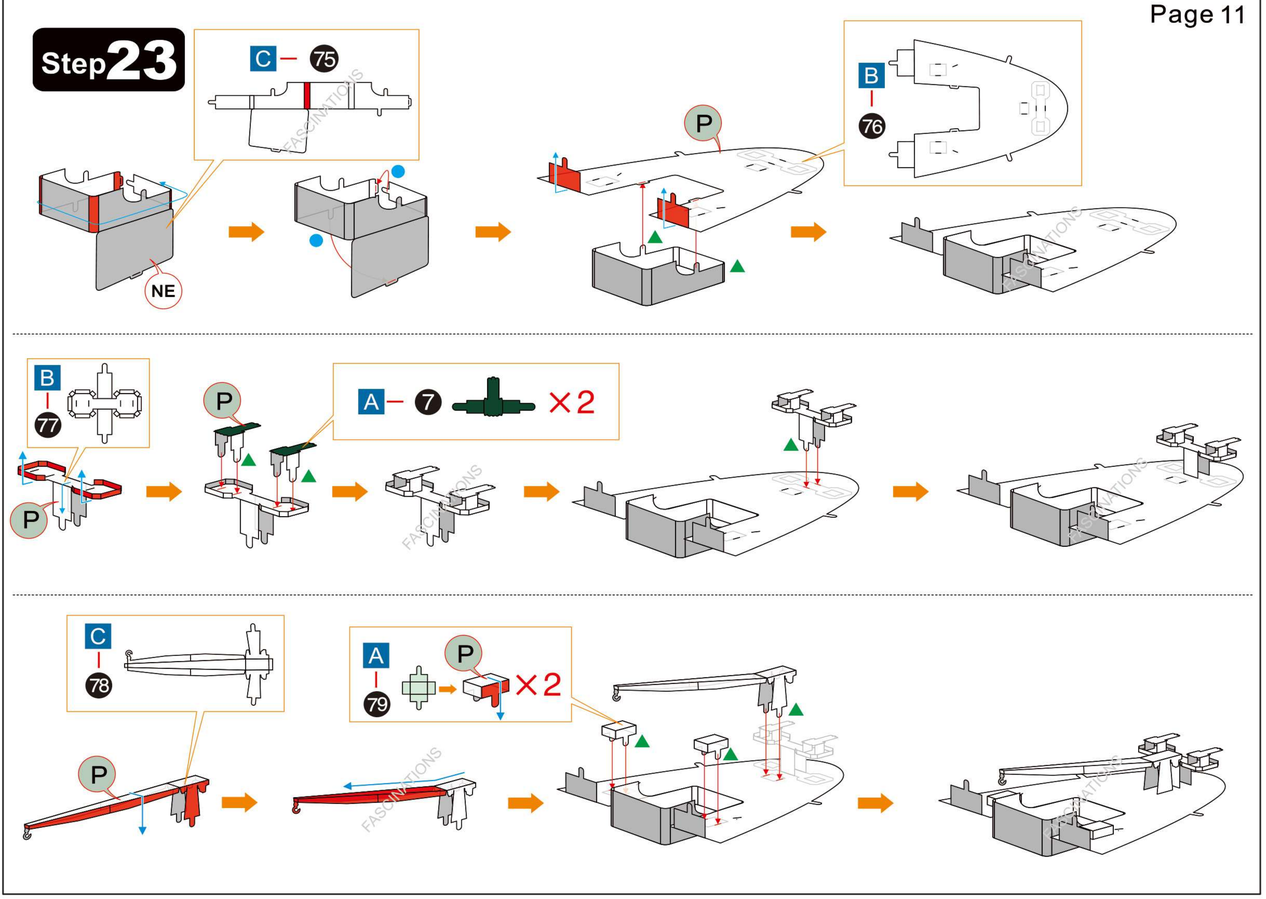

Step24

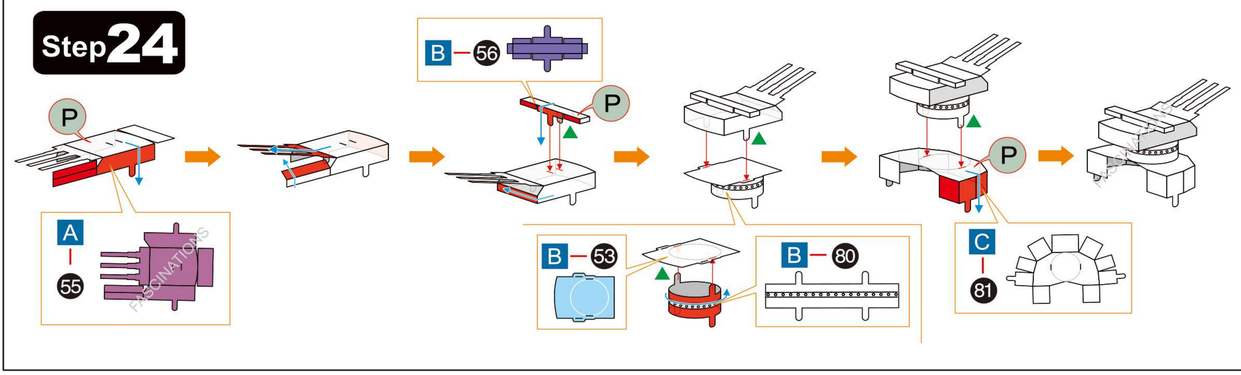

Step25

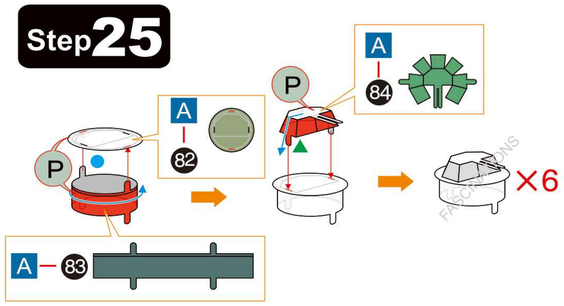

Step26

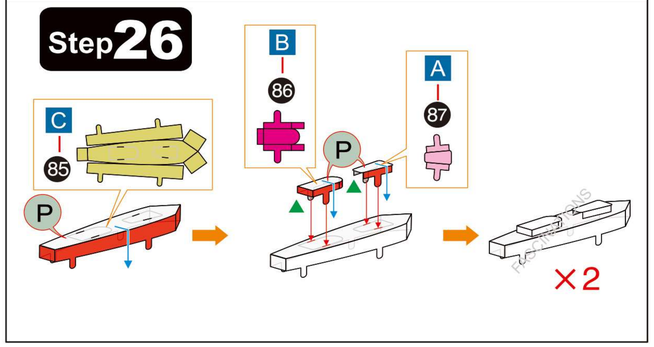

Step27

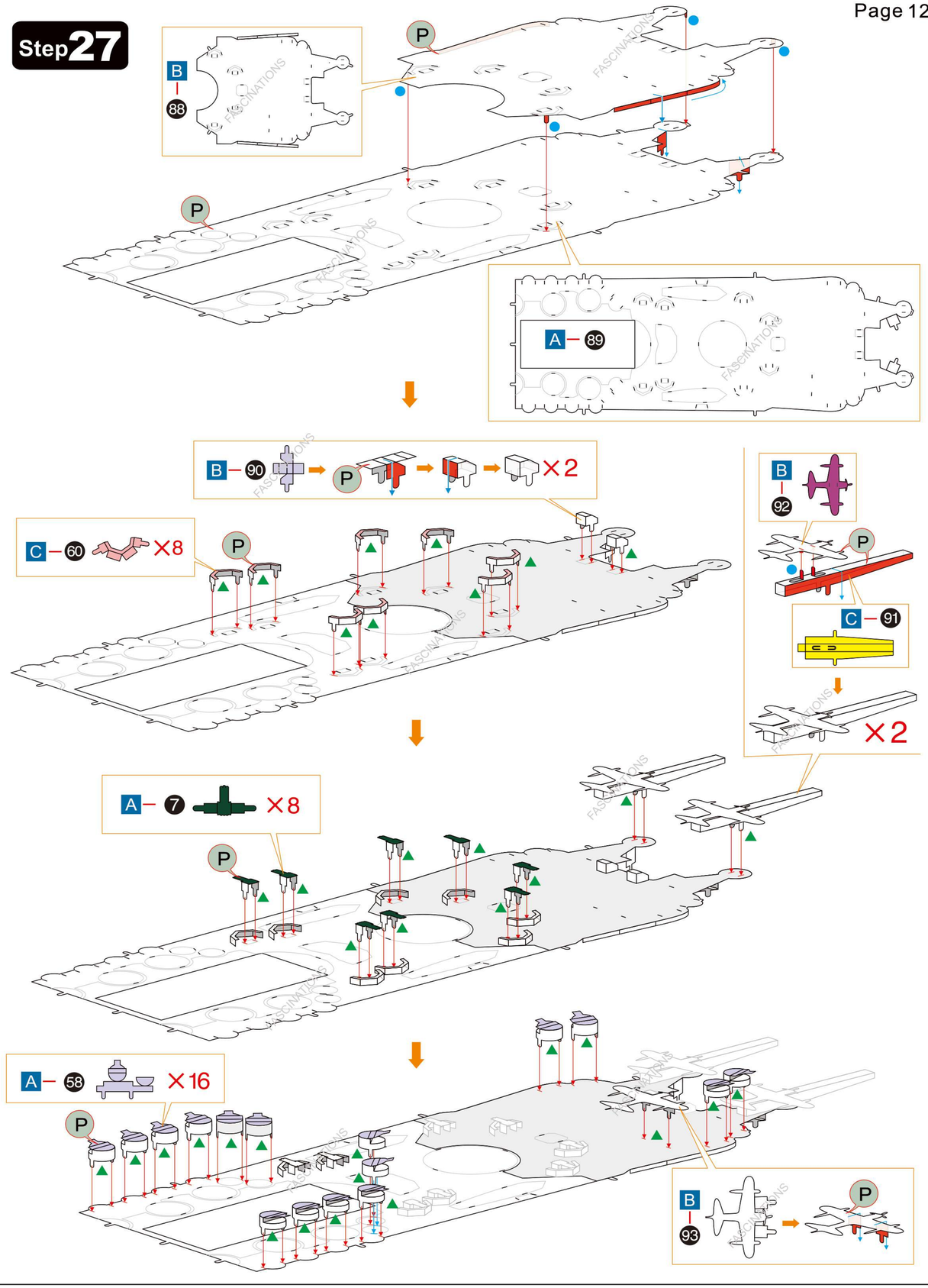

Step 28

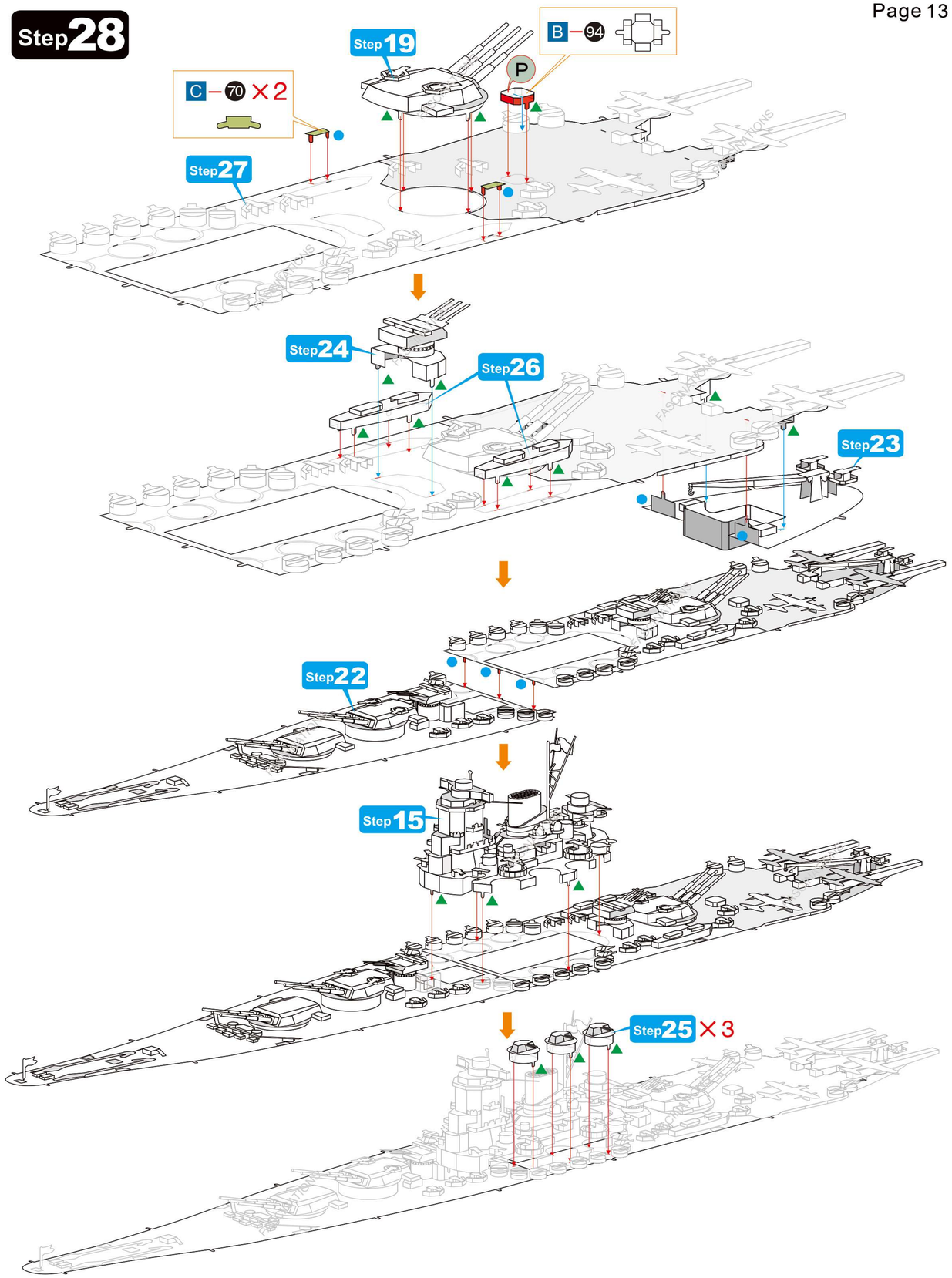

Step 29

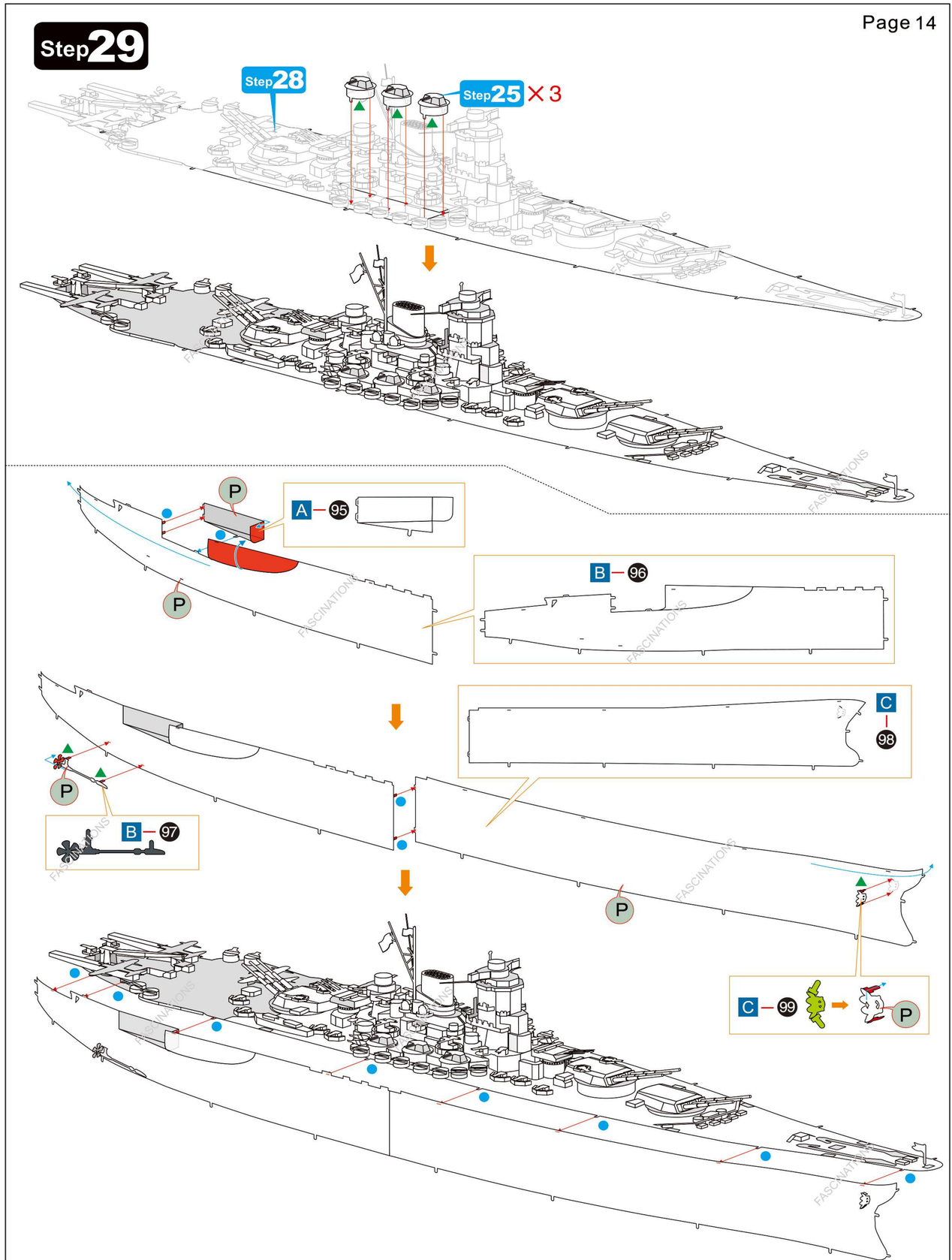

Step 30

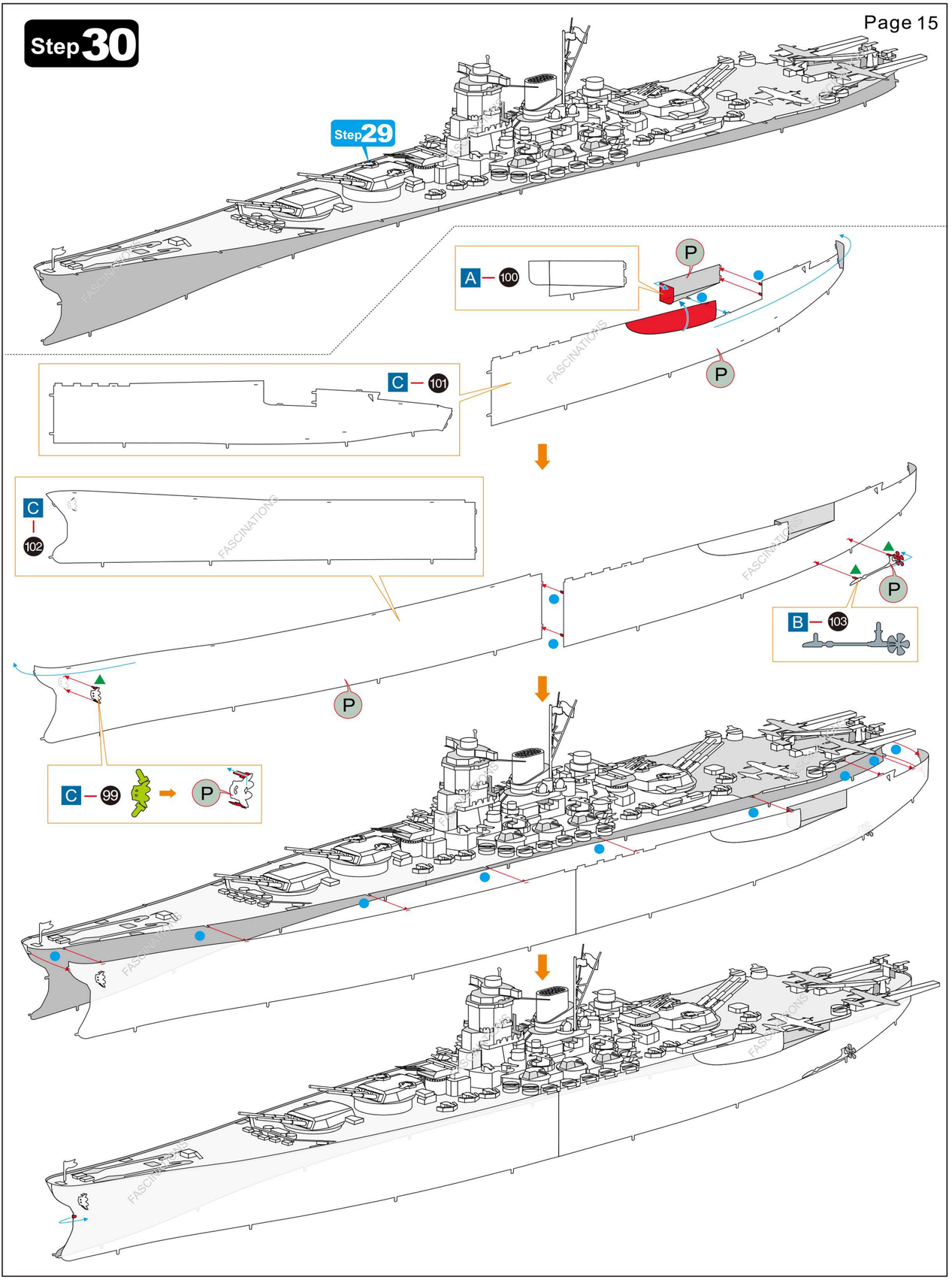

Step 31

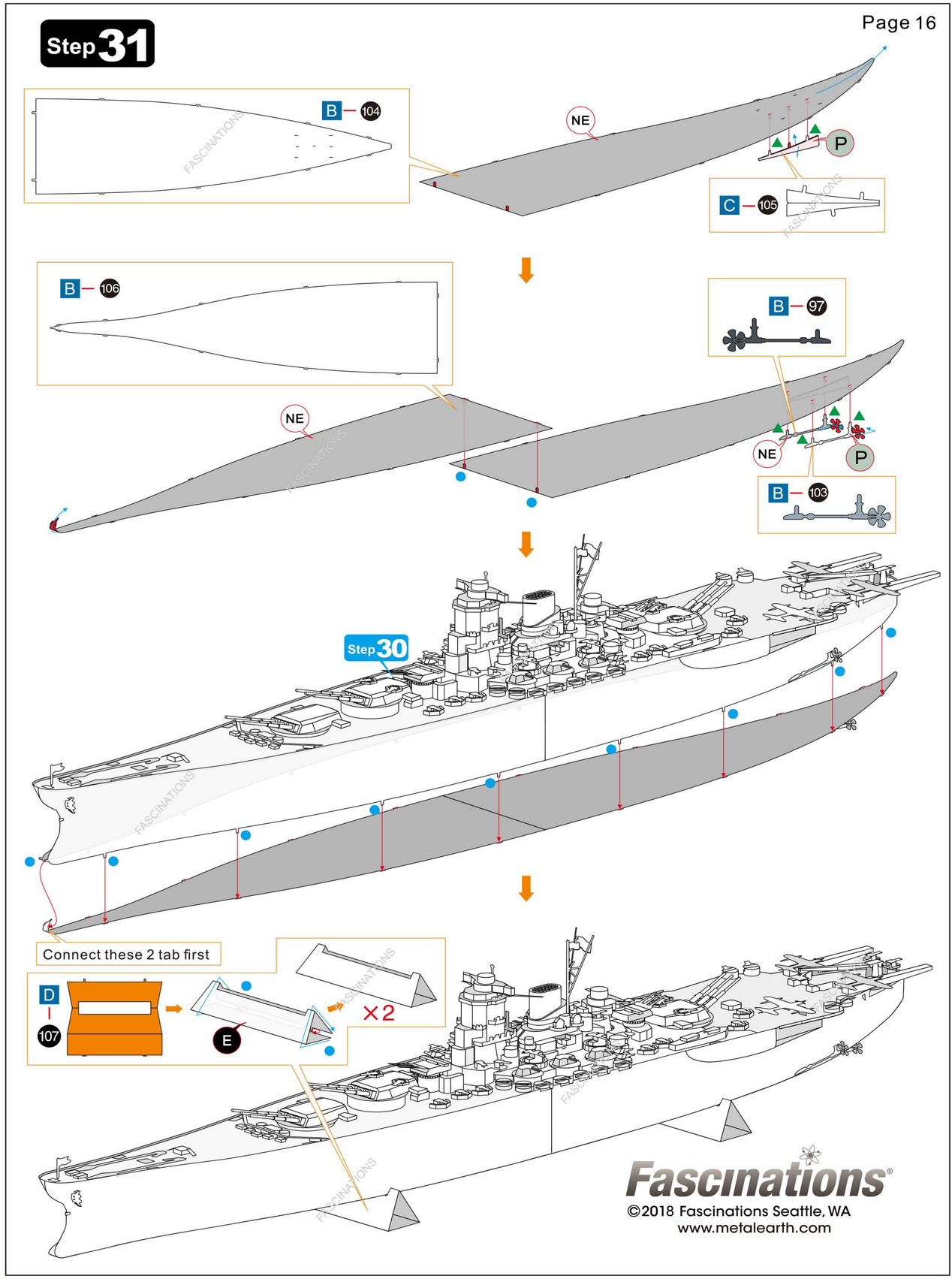

Fascinations®
©2018 Fascinations Seattle, WA
www.metalearth.com