Baseus倍思

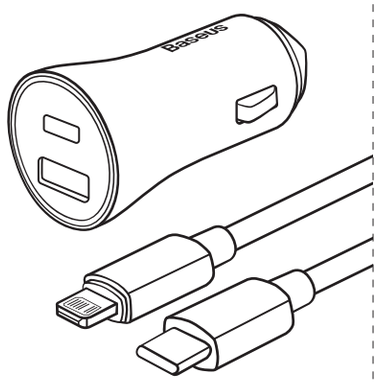

倍思 金点子Pro 双快充车载充电器U+C 40W
（含：智简数据线 Type-C to iP 1m）

使用说明书

使用产品前请仔细阅读本使用说明并请妥善保管

一、产品示意图展示

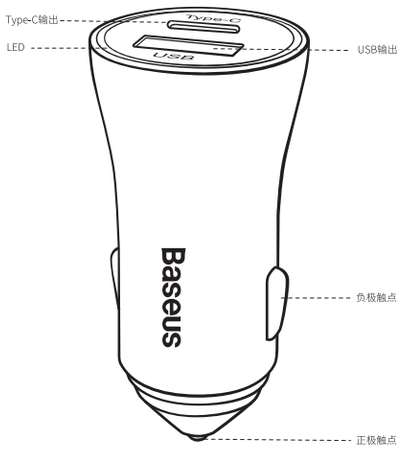

二、功能描述

1. 支持PD3.0、PD2.0、QC4+、SCP、FCP、QC3.0、QC2.0、MTK PE+等主流快充。
2. Type-C和USB双口独立快充输出，Type-C单口最大20W，USB口单口最大20W，双口同时最大40W。
3. 双口快充，急速不等待。

三、产品参数

名称：车载充电器
型号：CCJDZ-CX
材质：铝+ABS+PC
尺寸：H55mm×Φ26.5mm
重量：约26克
输入：DC 12-24V 6.0A Max.
USB 输出：5V=3A; 9V=2A; 10V=2A; 12V=1.5A 20W Max.
Type-C 输出：5V=3A; 9V=2.22A; 12V=1.6A 20W Max.
总输出：20W+20W 40W Max.
适用车型：大多数主流车型
适用设备：大多数手机及数码产品

名称：智简数据线 Type-C to iP 1m
材质：PVC
线长：1米

以上数据来源Baseus(倍思)实验室测定值，但因客观环境改变数据会有所不同或误差。

注：

1. 10V=2A，在输出负载兼容华为SCP等快充协议时方可实现；
2. 本产品适用于12V-24V电压的车型。不能用于电压超过24V以上的车型，否则可能导致产品出现不可逆的故障。

四、包装清单

倍思 金点子Pro 双快充车载充电器U+C 40W	×1
智简数据线 Type-C to iP 1m	×1
说明书	×1

五、使用说明

1. 金点子Pro车载充电器插入车内点烟器接口，在车内电源开启状态下，金点子Pro的蓝色LED灯亮起，表示车充工作状态正常。
2. 将充电线的一端接入金点子Pro车载充电器的输出口，另一端与手机或其它数码设备链接，此时可为设备充电。

六、注意事项

1. 请在汽车发动机启动后,再插上设备充电。
2. 不要充大功率的设备,以防功率过大损坏设备。
3. 不要在潮湿环境或雷雨天气中使用充电器。
4. 不要用烈性化学制品,清洗剂等清洗充电器。
5. 用完及时拔出插头,必定要选购品牌数据线。
6. 该产品属于电子产品,请勿强烈跌落或碰撞产品。

七、温馨提示

1. 产品使用不当，容易造成产品本身或者可能危及人身财产安全。
2. 如因消费者违反产品说明书不恰当使用，造成的人身及财产损害将自行承担一切后果，本公司将不承担任何法律责任。
3. 产品支持快充，为了更好的快充体验，请使用官方或认证的原装充电线。

八、电子信息产品有毒有害物质声明

部件名称	有毒有害物质或元素					
	铅 (pb)	汞 (Hg)	镉 (Cd)	六价铬 (Cr VI)	多溴联苯 (PBB)	多溴二苯醚 (PBDE)
PCB	X	O	O	O	O	O
塑料	O	O	O	O	O	O
金属	X	O	O	O	O	O
附件	O	O	O	O	O	O

本表格依据SJ/T 11364的规定编制。
O：表示该有毒有害物质在该部件所有均质材料中的含量均在GB/T 26572标准规定的限量要求以下。
X：表铺有毒有害物质至少在该部件某一均质材料中的含量超出GB/T 26572标准规定的限量要求。
该产品符合欧盟RoHS 2.0指令（2011/65/EU）
5年图标是指“环保有效使用期限”，不是产品质量保证期限。电子产品均含有铅、汞、镉等有毒有害物质，一旦超期使用，有毒有害物质将可能因为发生外泄或突变，对环境造成污染，或对人身、财产造成严重损害。“环保使用期限”，意味着所有的电子产品都将被要求在此有效限期内使用，超过安全使用年限之后出现的安全风险问题，我们不再对产品质量负责。

此设备符合欧盟指令2012/19/EU的规定，此设备不得与普通废弃物一起处理，必须回收利用。此符号标明本产品不得作为生活垃圾处理，而必须将本产品交至相应的废品回收站，进行电子电气设备回收处理。

特此申明，深圳市时商创展科技有限公司的产品型号为：CCJDZ-CX,符合指令2014/30/EU、2011/65/EU的规定。欧盟符合性声明的全文可在以下网站查询：www.baseus.com

制造商：深圳市时商创展科技有限公司
地址：深圳市龙岗区坂田街道岗头社区雪岗路2008号倍思智能园B栋五层
执行标准：Q/SSCZ 012
热线：4000-712-711　　网址：www.baseus.com

警告 禁止拆解、撞击或投入火中，请遵守安全使用说明。
请勿跌落或在高温下使用本产品，本产品请勿让儿童接触。

倍思设计/Designed by Baseus
中国制造/Made in China
PB3096Z-P0A3
1000032967

Baseus

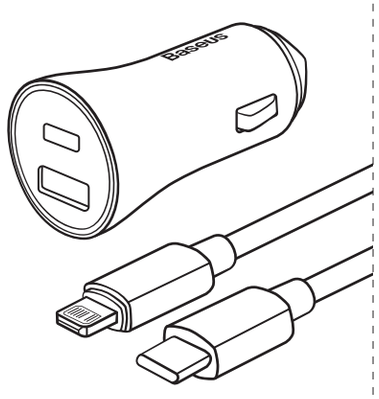

Baseus Golden Contactor Pro Dual Quick Charger
Car Charger U+C 40W
(With Baseus Simple Wisdom Data Cable Type-C to iP 1m)

User Manual

Please read the instruction manual carefully
before using the product and keep it with proper care.

1. Schematic display of product

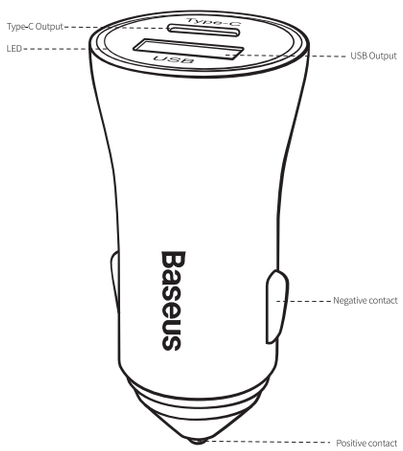

2. Function description

1. Supporting quick charging of such mainstream products as PD3.0, PD2.0, QC4+, SCP, FCP, QC3.0, QC2.0, MTK PE+, etc.
2. Type-C and USB dual port output, Type-C single port is up to 20W (Max), USB single port is up to 20W (Max), dual port output is up to 40W (Max).
3. Dual port quick charge, one step faster for charging.

3. Product parameters

Name: Car Charger
Model No.: CCJDZ-CX
Material: Aluminium+ABS+PC
Size: H55mm×Φ26.5mm
Weight: About 26g
Input: DC 12-24V 6.0A Max.
USB Output: 5V=3A; 9V=2A; 10V=2A; 12V=1.5A 20W Max.
Type-C Output: 5V=3A; 9V=2.22A; 12V=1.6A 20W Max.
Total Output: 20W+20W 40W Max.
Applicable car models: Most mainstream car models
Applicable devices: Most mobile phones and digital products

Name: Baseus Simple Wisdom Data Cable Type-C to iP 1m
Material: PVC
Length: 1m

The above data are measured by the Baseus laboratory,
the actual use will be slightly different depending on the specific circumstances.

Note:

1. 10V=2A are possible when the output load is compatible with quick charging protocols such as Huawei SCP;
2. Apply this product to vehicles with voltages of 12V-24V only, not those with voltages above 24V or else the product may experience irreversible failures.

4. Packing list

Baseus Golden Contactor Pro Dual Quick Charger Car Charger U+C 40W×1
Baseus Simple Wisdom Data Cable Type-C to iP 1m×1
User Manual×1

5. User instruction

1. Insert the car charger into the cigarette lighter interface in the car, in power on state, the blue LED will light up , indicating that the car charging state is normal.
2. Connect one end of the charger cable to the output port of Quick Charger Car Charger, and the other end to the mobile phone or other digital devices. At this time, the device can be charged.

6. Precautions

1. Please insert your device for charging after the car engine is started.
2. Please don' t charge big power devices to protect the device from being damaged due to too big a power.
3. Please don' t use the charger in any humid environment or in thunderstorm weather.
4. Don' t clean the charger with intensive chemicals or detergents, etc.
5. Remove the plug right after use. Branded data cables shall be used.
6. This product is an electronic product. Please do not strongly drop or bump the product.

7. Tips

1. Improper use of the product may cause damage to it or may endanger personal and property safety.
2. A consumer shall be liable for all consequences for any personal and property damages resulted from any of his/her improper use of this product against the product user manual, and Baseus shall bear no legal liability.
3. This product supports fast charging. Please use official or certified OEM charging cable for a better fast charging experience.

8. Declaration on toxic or hazardous substances and elements contained in electronic products

Part Description	Toxic or hazardous substances and elements					
	Lead (Pb)	Mercury (Hg)	Cadmium (Cd)	Hexavalent chromium (Cr VI)	Polybrominated biphenyls (PBB)	Polybrominated diphenyl ethers (PBDE)
PCB	X	○	○	○	○	○
Plastic	○	○	○	○	○	○
Metal	X	○	○	○	○	○
Accessory	○	○	○	○	○	○

This form is prepared in accordance with SJ/T 11364 regulations.
O: Indicates that contents of the toxic and hazardous substances in all homogeneous materials are below the limit requirements specified by GB/T 26572 standard.
X: Indicates that contents of the toxic and hazardous substances exceed the limit requirements specified by GB/T 26572 standard in at least one homogeneous material of the component.

This product complies with EU RoHS 2.0 Directive(2011/65/EU)
The 5-year icon refers to the “effective life of environmental protection”, not the product quality assurance period. Electronic products all contain toxic and harmful substances such as lead, mercury and cadmium. Once they are overused, toxic and harmful substances may leak or mutate, cause pollution to the environment, or cause serious damage to people and property. The term of “environmental protection use” means that all electronic products will be required to use within this effective period. We will no longer be responsible for the quality of the products due to the safety risks that arise after the safe use period.

This device complies with part 15 of the FCC Rules. Operation is subject to the following two conditions: (1) this device may not cause harmful interference, and (2) this device must accept any interference received, including interference that may cause undesired operation.
Any changes or modifications not expressly approved by the party responsible for compliance
could void the user's authority to operate the equipment.
NOTE: This equipment has been tested and found to comply with the limits for a Class B digital device, pursuant to Part 15 of the FCC Rules. These limits are designed to provide reasonable protection against harmful interference in a residential installation. This equipment generates, uses and can radiate radio frequency energy and, if not installed and used in accordance with the instructions, may cause harmful interference to radio communications. However, there is no guarantee that interference will not occur in a particular installation.
If this equipment does cause harmful interference to radio or television reception, which can be determined by turning the equipment off and on, the user is encouraged to try to correct the interference by one or more of the following measures:
-- Reorient or relocate the receiving antenna.
-- Increase the separation between the equipment and receiver.
-- Connect the equipment into an outlet on a circuit different from that to which the receiver is connected.
-- Consult the dealer or an experienced radio/TV technician for help.

This equipment complies with the provisions of Directive 2012/19/EU. It is strictly forbidden to dispose of this equipment with ordinary trash; it must be recycled. This symbol indicates that the product shall not be treated as regular domestic trash, and must be delivered to a recycling center that is capable of recycling electronic and electrical equipment.

It is hereby declared that CCJDZ-CX, a product model of Shenzhen Times Innovation Technology Co., Ltd., complies with the provisions of Directive 2014/30/EU. Directive 2011/65/EU. The full text of the EC Declaration of Conformity can be found on the following website: www.baseus.com

Warning Please follow the above safety instructions otherwise it will cause fire,electric shock,damage or other damage.

Manufacturer: Shenzhen Times Innovation Technology Co., Ltd.
Add: 5th Floor, Building B, Baseus Intelligence Park, No.2008, Xuegang Rd, Gangtou Community, Bantian Street, Longgang District, Shenzhen
Executive Standard: Q/SSCZ 012
Hotline: +86-4000-712-711　Website: www.baseus.com