ELECTRO MAGNET MODULE

SEN-MAG25N

1. GENERAL INFORMATION

Dear costumer,

thank you very much for choosing our product.

In following, we will introduce you to what to observe while starting up and using this product.

Should you encounter any unexpected problems during use, please do not hesitate to contact us.

2. COMMISSIONING WITH THE RASPBERRY PI

This guide was written under Raspberry Pi OS Bookworm for the Raspberry Pi 4 and 5. It has not been checked with newer operating systems or hardware.

Wiring:

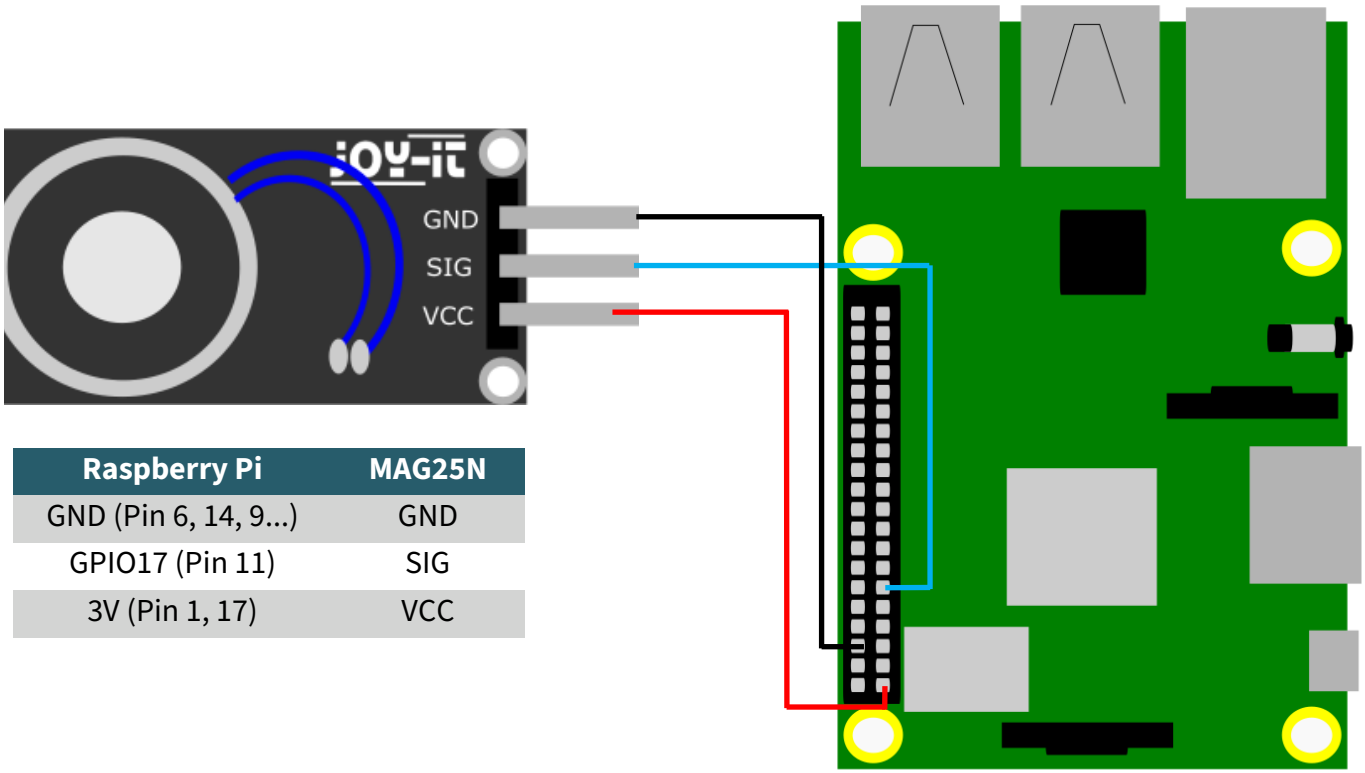

Raspberry Pi	MAG25N
GND (Pin 6, 14, 9...)	GND
GPIO17 (Pin 11)	SIG
3V (Pin 1, 17)	VCC

Code example:

In the following code example the magnet is activated every 5 seconds for 2.5 seconds.

```
from gpiozero import OutputDevice
from time import sleep

# Setup the output device using pin 17
output_device = OutputDevice(17)

try:
    while True:
        output_device.on()    # Set output to high
        sleep(2.5)            # Wait for 2.5 seconds
        output_device.off()   # Set output to low
        sleep(2.5)            # Wait for 2.5 seconds
except KeyboardInterrupt:
    # gpiozero cleans up the resources automatically
    print("Program terminated by user")
```

3. COMMISSIONING WITH THE ARDUINO

Wiring:

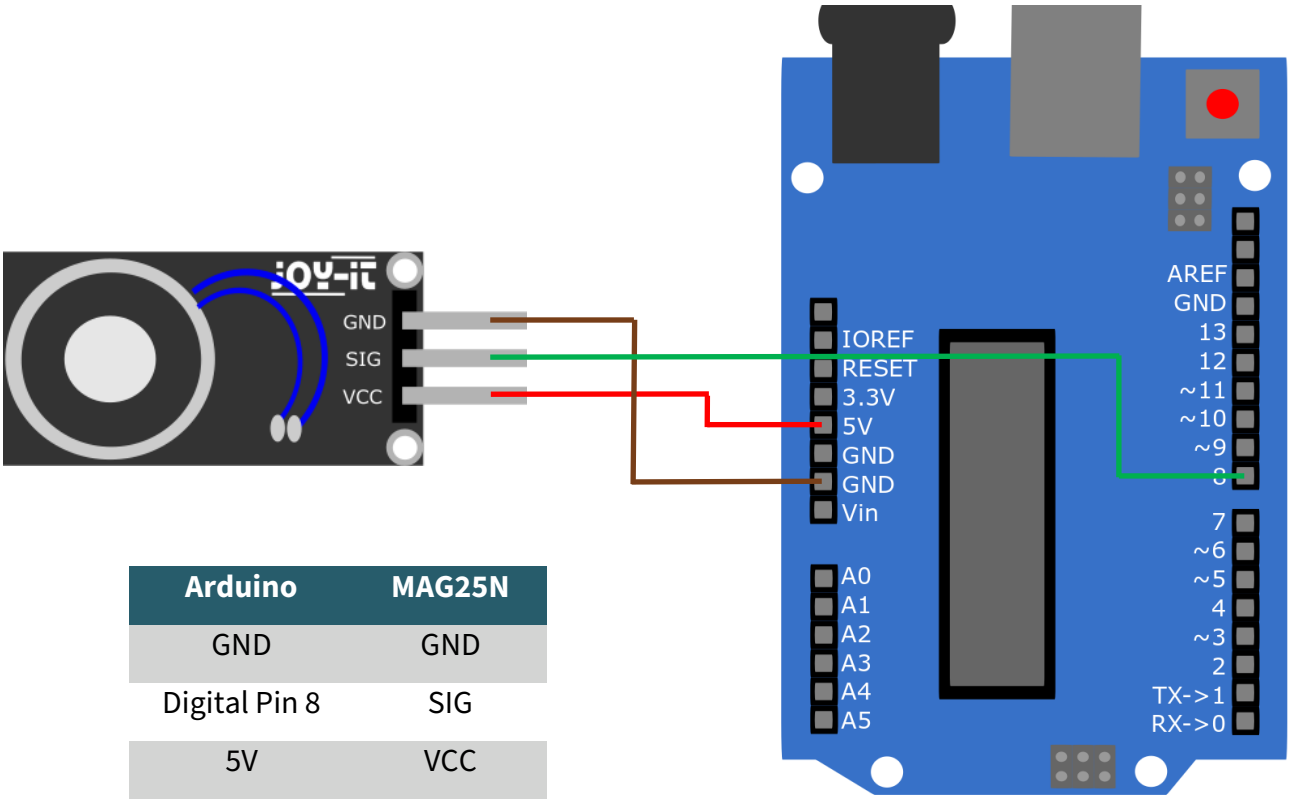

Arduino	MAG25N
GND	GND
Digital Pin 8	SIG
5V	VCC

Code example:

In the following code example the magnet is activated every 5 seconds for 2.5 seconds.

Before uploading, make sure that you have set the correct board and port in your Arduino IDE.

```
int val;
void setup() {
  // put your setup code here, to run once:
pinMode(8, OUTPUT);
Serial.begin(9600);

}

void loop() {
  // put your main code here, to run repeatedly:
digitalWrite(8, HIGH);
delay(2500);
digitalWrite(8, LOW);
delay(2500);

}
```

4. ADDITIONAL INFORMATION

Our information and take-back obligations according to the Electrical and Electronic Equipment Act (ElektroG)

Symbol on electrical and electronic equipment:

This crossed-out dustbin means that electrical and electronic appliances do not belong in the household waste. You must return the old appliances to a collection point.
Before handing over waste batteries and accumulators that are not enclosed by waste equipment must be separated from it.

Return options:
As an end user, you can return your old device (which essentially fulfils the same function as the new device purchased from us) free of charge for disposal when you purchase a new device.
Small appliances with no external dimensions greater than 25 cm can be disposed of in normal household quantities independently of the purchase of a new appliance.

Possibility of return at our company location during opening hours:
Simac GmbH, Pascalstr. 8, D-47506 Neukirchen-Vluyn, Germany

Possibility of return in your area:
We will send you a parcel stamp with which you can return the device to us free of charge. Please contact us by e-mail at Service@joy-it.net or by telephone.

Information on packaging:
If you do not have suitable packaging material or do not wish to use your own, please contact us and we will send you suitable packaging.

5. SUPPORT

If there are still any issues pending or problems arising after your purchase, we will support you by e-mail, telephone and with our ticket support system.

E-Mail: service@joy-it.net

Ticket system: https://support.joy-it.net

Telephone: +49 (0)2845 9360-50

For further information please visit our website:

www.joy-it.net

Published: 2024.12.20