ABB INDUSTRIAL DRIVES

ACS880-607LC 1-phase brake units

Hardware manual

ACS880-607LC 1-phase brake units

Hardware manual

Table of contents

3. Mechanical installation

5. Electrical installation

7. Start-up

© 2019 ABB Oy. All Rights Reserved.

3AXD50000481491 Rev A
EN
EFFECTIVE: 2019-06-28

Table of contents

1 Introduction to the manual

Contents of this chapter 9
Applicability 9
Safety instructions 9
Target audience 9
Related documents 10
Use of component designations 10
Terms and abbreviations 10

2 Operation principle and hardware description

Contents of this chapter 13
Product overview 13
Operation principle 13
Single-line diagram of the drive system 14
Layout 15
- Brake chopper cubicle 15
- Brake resistor cabinet 16
- Brake chopper module 17

Overview of power and control connections 19
- Controlling the brake chopper from an external control location 20
- Master-follower connection 20

Type designation labels 20
- Brake unit type designation label 20
- Brake chopper module type designation label 21

Brake unit type designation key 21
- Basic code 21

3 Mechanical installation

Contents of this chapter 23
Brake unit 23
Brake resistor cabinet 23
User-defined brake resistors 23

4 Planning the electrical installation

Contents of this chapter 25
Limitation of liability 25
Generic guidelines 25
Selecting the user-defined brake resistors 25
- Selecting and routing the brake resistor cables 26
  - Typical resistor cable sizes 26
  - Minimizing electromagnetic interference 26
  - Maximum cable length 26
- Placing the brake resistors 26
- Selecting the resistor thermal switch circuit cable 27

Protecting the system against thermal overload 27
Operation principle 27
Protecting the system against short-circuits 27

5 Electrical installation

Contents of this chapter 29
Electrical safety precautions 29
Checking the insulation of brake resistor and resistor cable 31
Connecting the brake resistor cables and thermal switch 32
Connection diagram 32
Connection procedure 32

6 Installation checklist of the drive

Contents of this chapter 35
Checklist 35

7 Start-up

Contents of this chapter 37
Start-up procedure 37

8 Fault tracing

Contents of this chapter 39
Fault indications 39
Fan supervision 40
Selecting the voltage 40

9 Maintenance

Contents of this chapter 43
Maintenance intervals 43
Cooling system 44
Retightening the power connections 44
Replacing cooling fans 45
Brake chopper cubicle 45
Brake resistor cabinet (option +D151) 46

10 Internal cooling circuit

Contents of this chapter 47
Applicability 47
Internal cooling system 47
Connection to a cooling unit 49
Connection to an ACS880-1007LC cooling unit 49
Connection to a custom cooling unit 49
General requirements 49
Coolant temperature control 49
Filling up and bleeding the internal cooling circuit 50
Drive line-ups with an ACS880-1007LC cooling unit 50
Drive line-ups with a custom cooling unit 50
Draining the internal cooling circuit 52
Maintenance intervals 52

Technical data 52
Coolant specification 52
Coolant type 52
Temperature limits 52
Pressure limits 54
Coolant flow rate limits 54
Cooling circuit materials 54

11 Technical data

Contents of this chapter 57
Ratings 57
Brake chopper only 57
Brake chopper with factory-installed brake resistors (option +D151) 58
Definitions 59
DC fuses 60
Dimensions, weights and free space requirements 60
Brake chopper only 60
Brake chopper with factory-installed brake resistors (option +D151) 60
Losses, cooling data and noise 61
Brake chopper only 61
Brake chopper with factory-installed brake resistors (option +D151) 61
Terminal and lead-through data for the resistor cable for brake units with user-defined brake resistors 62
Resistor cable sizes 62
Maximum cable length 62
Protection classes 63
Brake chopper cubicle 63
Ambient conditions 63
Materials 65
Standards and markings 65
Disclaimers 65
Generic disclaimer 65
Cybersecurity disclaimer 66

12 Example circuit diagrams

Contents of this chapter 67
Brake unit with one brake chopper module 68
Brake chopper control 69
External fan voltage supply 70
Fan control for brake chopper cubicle 71
Fan control for resistor cabinet 72

Further information

1

Introduction to the manual

Contents of this chapter

This chapter gives basic information on the manual.

Applicability

The manual is applicable to ACS880-607LC 1-phase brake units that form a part of a liquid-cooled ACS880 multidrive system.

Safety instructions

Follow all safety instructions delivered with the drive.

- Read the **complete safety instructions** before you install, commission, use or service the drive. The complete safety instructions are given in *ACS880 liquid-cooled multidrive cabinets and modules safety instructions* (3AXD50000048633 [English]).
- Read the **software-function-specific warnings and notes** before changing the default settings of a function. For each function, the warnings and notes are given in the section describing the related user-adjustable parameters.
- Read the **task-specific safety instructions** before starting the task. See the section describing the task.

Target audience

This manual is intended for people who plan the installation, install, start up and service the drive, or create instructions for the end user of the drive concerning the installation and maintenance of the drive.

Read the manual before working on the drive. You are expected to know the fundamentals of electricity, wiring, electrical components and electrical schematic symbols.

The manual is written for readers worldwide. Both SI and imperial units are shown.

Related documents

Manual	Code
General manuals	
ACS880 liquid-cooled multidrive cabinets and modules safety instructions	3AXD50000048633
ACS880 liquid-cooled multidrive cabinets and modules electrical planning instructions	3AXD50000048634
ACS880 liquid-cooled multidrive cabinets mechanical installation instructions	3AXD50000048635
CIO-01 I/O module for distributed I/O bus control user's manual	3AXD50000126880
Supply unit manuals	
ACS880-207LC IGBT supply units hardware manual	3AXD50000174782
ACS880 IGBT supply control program firmware manual	3AUA0000131562
Inverter unit manuals	
ACS880-107LC inverter units hardware manual	3AXD50000196111
ACS880 primary control program firmware manual	3AUA0000085967
ACS880 primary control program quick start-up guide	3AUA0000098062
Manuals for application programs (Crane, Winder, etc.)	
Brake unit and DC/DC converter unit manuals	
ACS880-607LC 1-phase brake units hardware manual	3AXD50000481491
ACS880 (3-phase) brake control program firmware manual	3AXD50000020967
ACS880-1607LC DC/DC converter units hardware manual	3AXD50000431342
ACS880 DC/DC converter control program firmware manual	3AXD50000024671
Option manuals	
ACS880-1007LC liquid cooling unit user's manual	3AXD50000129607
ACS-AP-x assistant control panels user's manual	3AUA0000085685
Drive composer start-up and maintenance PC tool user's manual	3AUA0000094606
Manuals for I/O extension modules, fieldbus adapters, safety options etc.	

You can find manuals on the Internet. See www.abb.com/drives/documents. For manuals not available in the document library, contact your local ABB representative.

Use of component designations

Some device names in the manual include the item designation in brackets, for example [Q20], to make it possible to identify the components in the circuit diagrams of the drive.

Terms and abbreviations

Term/ Abbreviation	Description
Brake chopper	Conducts the surplus energy from the intermediate circuit of the drive to the brake resistor when necessary. The chopper operates when the DC link voltage exceeds a certain maximum limit. The voltage rise is typically caused by deceleration (braking) of a high inertia motor.
Brake chopper module	Brake chopper enclosed in a metal frame or housing. Intended for cabinet installation.

Term/ Abbreviation	**Description**
Brake resistor	Dissipates the drive surplus braking energy conducted by the brake chopper to heat
Brake unit	Brake chopper modules under control of one control board, and related accessories
CIO	I/O module for controlling cabinet fans
Cubicle	One section of a cabinet-installed drive. A cubicle is typically behind a door of its own.
DC link	DC circuit between rectifier and inverter
Drive	Frequency converter for controlling AC motors
EMC	Electromagnetic compatibility
IGBT	Insulated gate bipolar transistor
Intermediate circuit	DC circuit between rectifier and inverter
Inverter	Converts direct current and voltage to alternating current and voltage.
Multidrive	Drive for controlling several motors which are typically coupled to the same machinery. Includes one supply unit, and one or several inverter units.
NBRC	Brake chopper control board
NBRW	Series of optional, liquid-cooled brake chopper modules
Parameter	In the drive control program, user-adjustable operation instruction to the drive, or signal measured or calculated by the drive. In some (for example fieldbus) contexts, a value that can be accessed as an object, eg, variable, constant, or signal.
Rectifier	Converts alternating current and voltage to direct current and voltage
SAFUR	Series of brake resistors

2

Operation principle and hardware description

Contents of this chapter

This chapter describes the operation principle and construction of the brake unit.

Product overview

ACS880-607LC is a liquid-cooled cabinet-installed brake unit, which forms a part of an ACS880 multidrive system. As standard, it includes brake chopper(s). Brake resistors are available as an option (+D151).

Operation principle

The brake chopper handles the energy generated by a decelerating motor. The extra energy increases the DC link voltage. The brake chopper connects the brake resistors to the DC link of the drive when the voltage exceeds an activation limit. The energy consumption by the resistor losses lowers the voltage until the resistor can be disconnected.

Typically, a drive system is equipped with a brake chopper if

- high capacity braking is needed and the drive cannot be equipped with a regenerative supply unit
- a backup for the regenerative supply unit is needed.

Single-line diagram of the drive system

The diagram below shows a typical common DC link drive system.

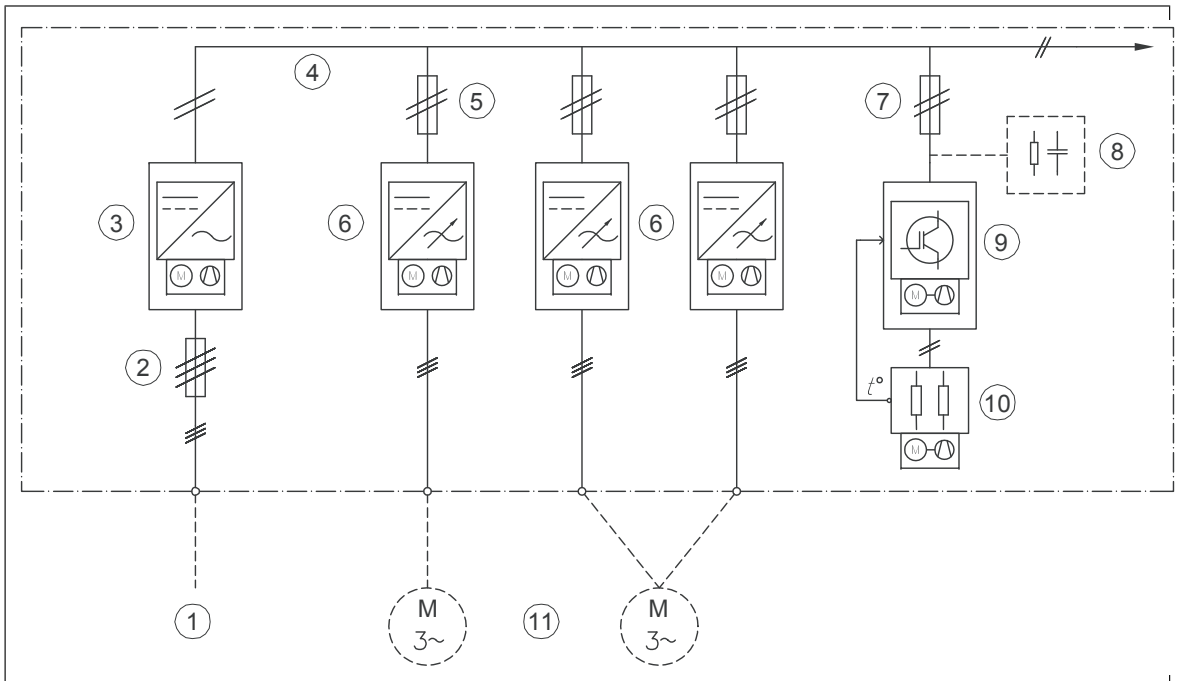

1	AC supply
2	Input (AC) fuses
3	Supply unit
4	DC link
5	Inverter DC fuses
6	Inverter units. In this example, one of the units consists of two inverter modules connected in parallel.
7	Brake chopper DC fuses
8	Attenuator. Suppresses voltage spikes at chopper input. Must be installed if it is possible to disconnect all inverter units from the DC link with the supply unit on, otherwise optional.
9	Brake chopper
10	Brake resistors
11	Motors

Layout

Brake chopper cubicle

The figure below shows the components of the brake chopper cubicle.

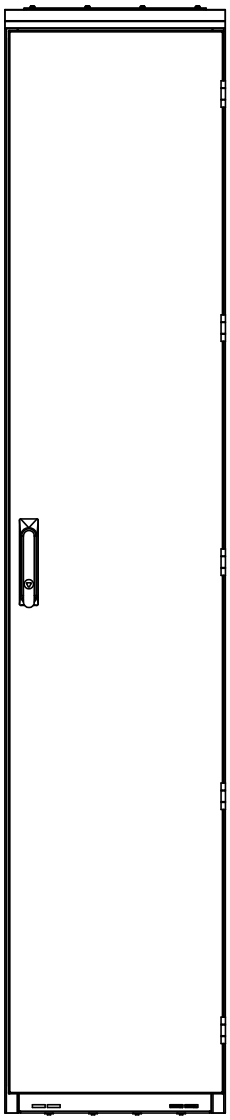

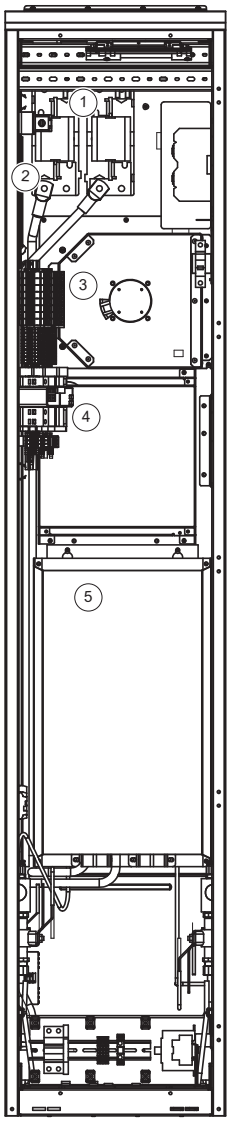

1	DC fuses [F121.xx]	4	Attenuator [R121.x]
2	CIO-01 I/O module [A115.x]	5	Brake chopper module [T121]
3	Cooling fan [G115.xx] and heat exchanger		

Brake resistor cabinet

The figure below shows the components of the brake resistor cabinet.

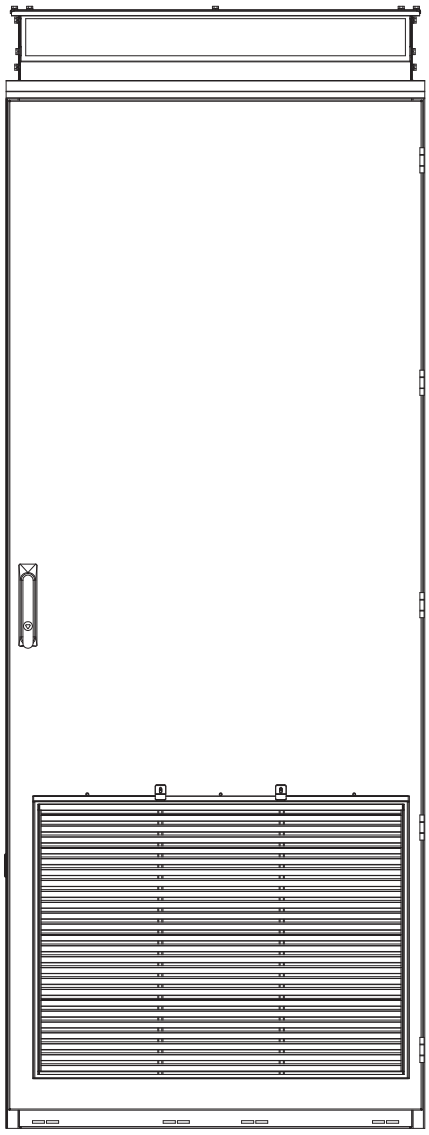

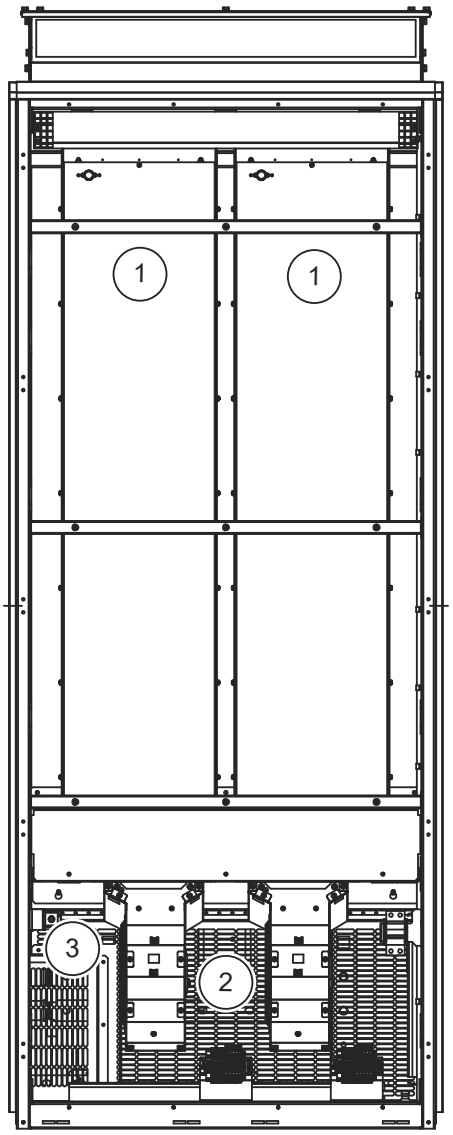

1	Brake resistors [R121.xx]	3	Door position indication switch [S121.7]
2	Brake resistor cooling fans		

Brake chopper module

The components of the brake chopper module are shown below.

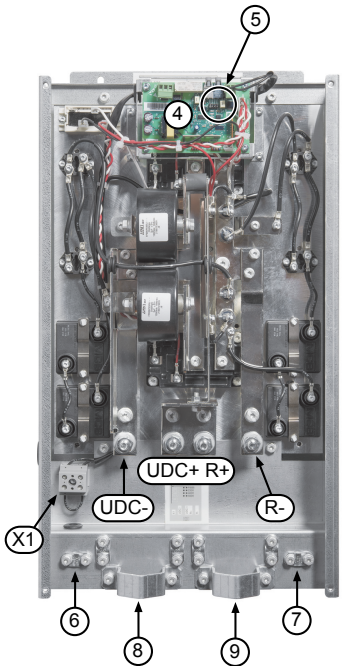

1	Fastening points on back plate (two at the top, two at the bottom)	8	Clamp for drive cable
2	Front cover fastening screws	9	Clamp for resistor cable
3	Front cover	X1	Enable input terminal block
4	Chopper control board (NBRC) with control terminals	UDC-	Power connection terminals
5	Voltage selection jumper	UDC+	
6	PE (protective earth) clamp	R+	
7	Grounding clamp	R-	

Coolant connections behind main mounting plate (side view).

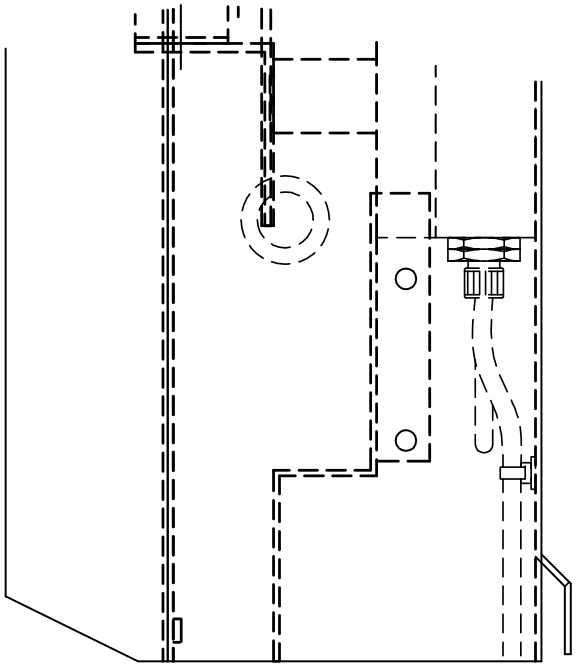

Overview of power and control connections

The diagram below shows the power and control connections of the brake unit.

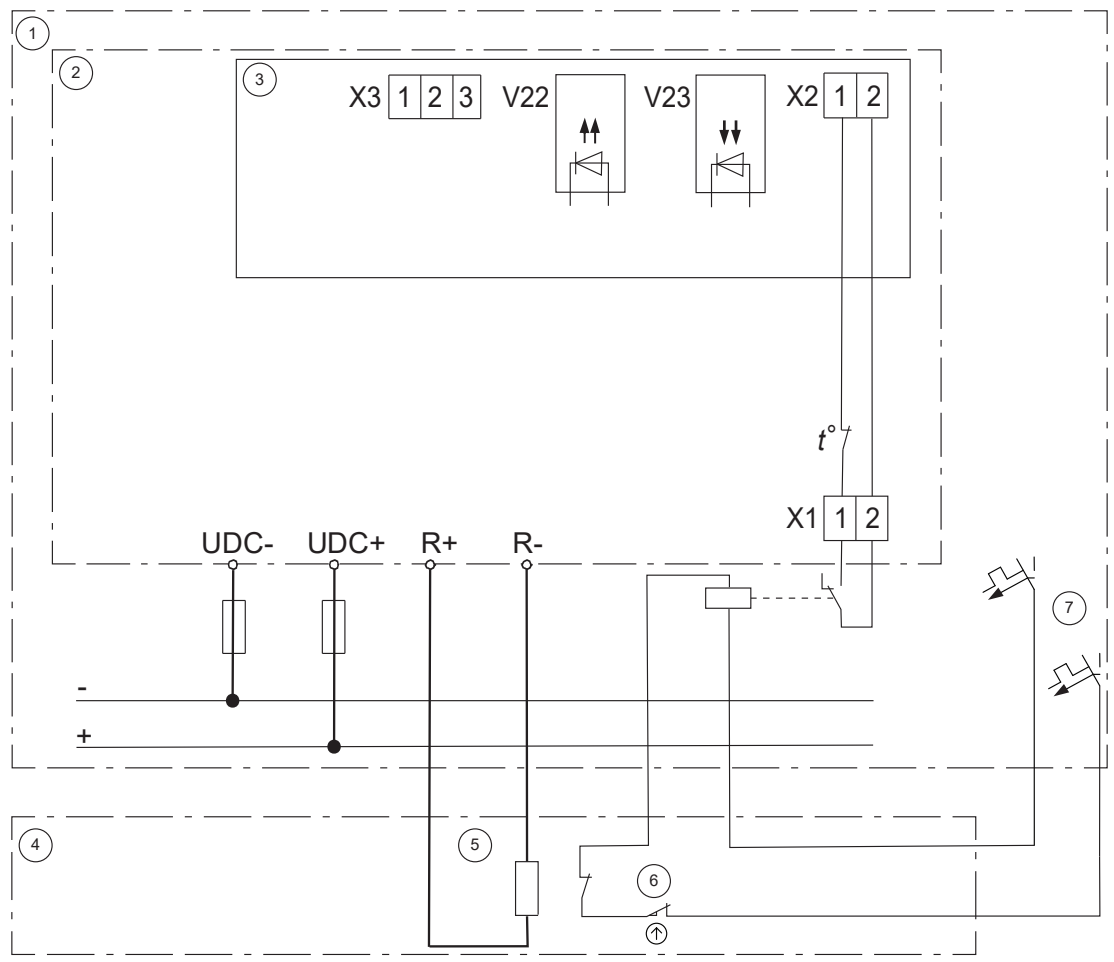

1	Brake chopper cubicle
2	Brake chopper module [T121]
3	Brake chopper control board (NBRC)
4	Brake resistor cabinet
5	Brake resistors [R121.xx]
6	Brake resistor monitoring circuit with a thermal switch and a door position indication switch [S121.7]
7	Control voltage
X1	Chopper enable input
X3	Fault indication relay output. Connected in brake resistor monitoring circuit (monitored by the chopper enable input X2). See *Example circuit diagrams*.
V22	Fiber optic cable connection (not connected as standard)
V23	Fiber optic cable connection (not connected as standard)

Controlling the brake chopper from an external control location

The brake chopper can be controlled from an external control location via a fiber optic link (terminals V22 and V23 on the chopper control board). Using the link, it is possible to synchronize several brake choppers.

Master-follower connection

When several brake choppers are in use, the first chopper in the chain acts as the master for the other choppers. The voltage selection jumper of the master (1) is set to the appropriate voltage at the factory, while the followers (2) are set to FIBER.

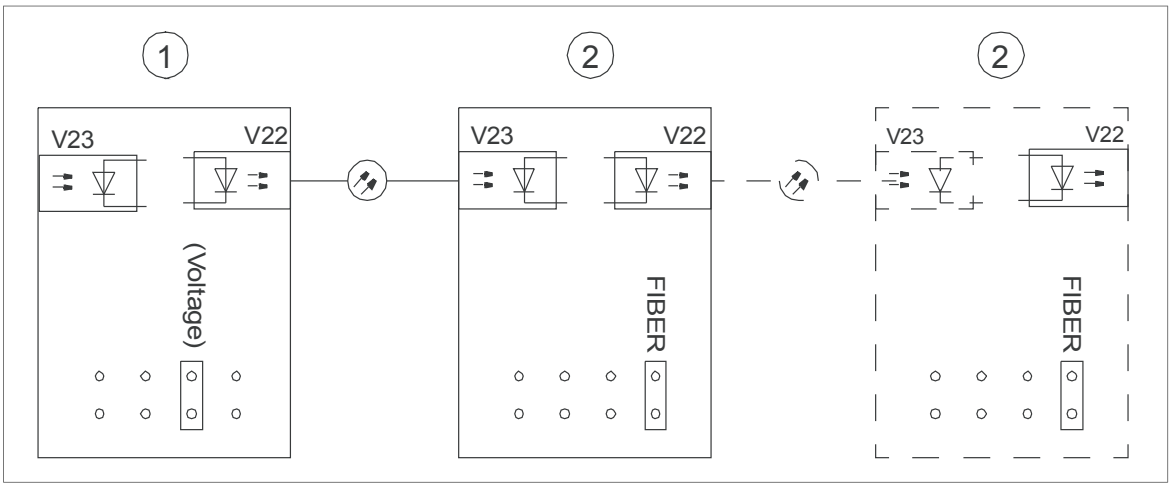

Type designation labels

Brake unit type designation label

Each brake unit is equipped with a type designation label. An example label is shown below.

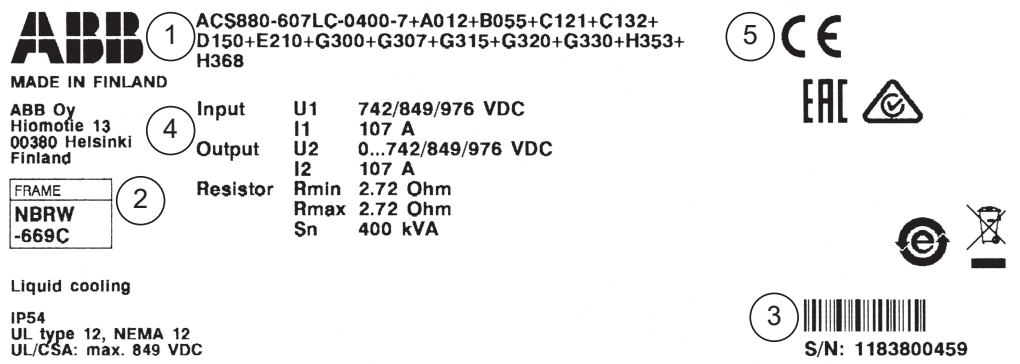

1	Type designation
2	Frame size
3	Serial number • The first digit of the serial number refers to the manufacturing plant. • The next four digits refer to the unit's manufacturing year and week, respectively. • The remaining digits complete the serial number so that there are no two units or modules with the same number.
4	Ratings
5	Valid markings

Brake chopper module type designation label

Each brake chopper module is equipped with a type designation label. An example label is shown below.

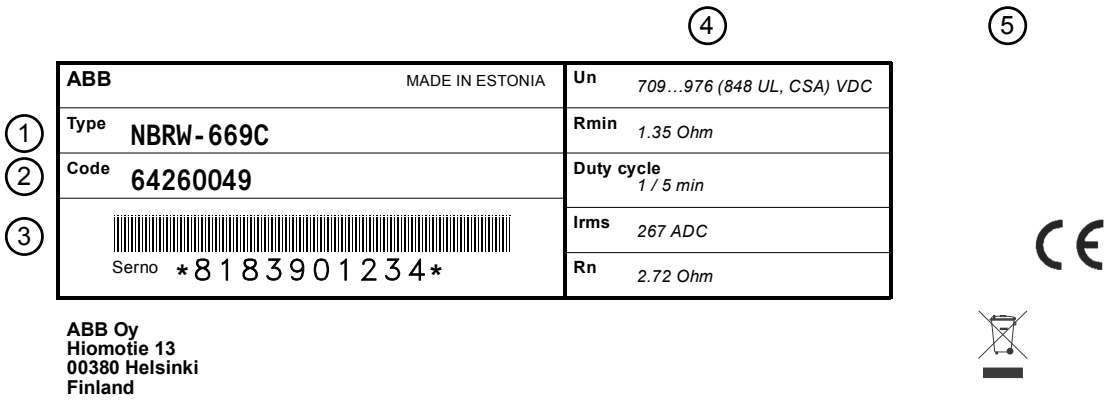

1	Type designation
2	Brake chopper module order code
3	Serial number • The first digit of the serial number refers to the manufacturing plant. • The next four digits refer to the unit's manufacturing year and week respectively. • The remaining digits complete the serial number so that there are no two units or modules with the same number.
4	Ratings
5	Valid markings

Brake unit type designation key

The type designation contains information on the specifications and configuration of the brake unit. The first digits express the basic configuration. The optional selections are given thereafter, separated by plus signs.

Basic code

This table describes the fields of the basic code.

Code	Description
ACS880	Product series.
607LC	Construction. 607LC = cabinet-installed liquid-cooled brake unit.
xxxx	Size. See the ratings table.
7	709…976 V DC. This is indicated in the type designation label as typical input voltage levels 742 / 849 / 976 V DC.

3

Mechanical installation

Contents of this chapter

This chapter describes the mechanical installation of the brake units.

Brake unit

The ACS880 multidrive - the brake unit as one part of the complete drive - is transported in sections. See *ACS880 liquid-cooled multidrive cabinets mechanical installation instructions* (3AXD50000048635 [English]).

Brake resistor cabinet

Installation guidelines:

- Install the brake resistor cabinet separate from the basic drive line-up
- Make sure that the installation site has proper ventilation. The ventilation must meet the air flow amounts specified.
- For the installation instructions, see *ACS880 multidrive cabinets mechanical installation instructions* (3AUA0000101764 [English]).

User-defined brake resistors

Obey the brake resistor manufacturer’s instructions.

4

Planning the electrical installation

Contents of this chapter

This chapter contains instructions on selecting, placing and protecting the brake circuit components and cables.

Limitation of liability

The installation must always be designed and made according to applicable local laws and regulations. ABB does not assume any liability whatsoever for any installation which breaches the local laws and/or other regulations. Furthermore, if the recommendations given by ABB are not followed, the drive may experience problems that the warranty does not cover.

Generic guidelines

See *Electrical planning instructions for ACS880 liquid-cooled multidrive cabinets and modules* (3AXD50000048634 [English]) for the generic guidelines for planning the electrical installation (selecting cables, routing cables, etc.) of multidrive cabinets and modules.

Selecting the user-defined brake resistors

WARNING!
ABB is not responsible for user resistor selection or protection of the resistor.

Select the resistor according to the resistor specification given in the technical data. In addition, consider the following:

- Each chopper must feed a resistor or resistor assembly of its own.
- The resistance (R) of the brake resistor assembly must be equal to or above the value specified. Never use resistance values below the specified value.

- The resistor must withstand the specified brake cycles.
- The ventilation of the space/room in which the resistors are located must meet the air flow amounts specified.
- The resistor assembly must be equipped with a thermal switch.

Selecting and routing the brake resistor cables

Typical resistor cable sizes

See the technical data.

Minimizing electromagnetic interference

Obey these rules in order to minimize the electromagnetic interference caused by rapid current changes in the resistor cables:

- Shield the braking power line completely, either by using shielded cable or a metallic enclosure. Unshielded single-core cable can only be used if it is routed inside a cabinet that efficiently suppresses radiated emissions.
- Install the cables away from other cable routes.
- Avoid long parallel runs with other cables. The minimum parallel cabling separation distance is 0.3 meters (1 ft).
- Cross the other cables at right angles.
- Keep the cable as short as possible in order to minimize the radiated emissions and stress on chopper IGBTs. The longer the cable, the higher the radiated emissions, inductive load and voltage peaks over the IGBT semiconductors of the brake chopper.

Maximum cable length

See the technical data.

Placing the brake resistors

Install the resistors outside the drive in a place where they will cool.

Arrange the cooling of the resistor in a way that:

- no danger of overheating is caused to the resistor or nearby materials
- the temperature of the room the resistor is located in does not exceed the allowed maximum.

Supply the resistor with cooling air or coolant according to the resistor manufacturer’s instructions.

WARNING!
The materials near the brake resistor must be non-flammable. The surface temperature of the resistor is high. Air flowing from the resistor is of hundreds of degrees Celsius. If the exhaust vents are connected to a ventilation system, make sure that the material withstands high temperatures. Protect the resistor against contact.

Selecting the resistor thermal switch circuit cable

Make sure that the cable in the resistor thermal switch circuit meets the following requirements:

- shielded cable
- operating voltage 450 V / 750 V (U_0 / U)
- insulation test voltage > 1.7 kV
- jacket material for at least 90 °C (194 °F). Take into account further requirements due to resistor construction and temperature.

Protecting the system against thermal overload

The brake chopper protects itself and the resistor cables against thermal overload. Make sure that the resistor assembly is equipped with a thermal switch, which is wired to disable the chopper in case of overtemperature.

Operation principle

If the resistor overheats, the thermal switch opens and interrupts the chopper control unit input signal and the chopper stops operating. In addition, the control unit relay output either opens the drive main contactor/breaker or gives a fault indication to the overriding control system, which takes care of the protection.

Protecting the system against short-circuits

The brake unit is equipped with fuses as standard.

The fuses protect the brake chopper, the brake resistors and the brake circuit cables in a short-circuit situation.

5

Electrical installation

Contents of this chapter

This chapter describes the electrical installation of the brake unit.

Electrical safety precautions

These electrical safety precautions are for all personnel who do work on the drive, motor cable or motor.

WARNING!
Obey these instructions. If you ignore them, injury or death, or damage to the equipment can occur.

If you are not a qualified electrician, do not do installation or maintenance work.

Go through these steps before you begin any installation or maintenance work.

1. Keep the cabinet doors closed when the drive is powered. With the doors open, a risk of a potentially fatal electric shock, arc flash or high-energy arc blast exists.
2. Clearly identify the work location and equipment.
3. Disconnect all possible voltage sources. Lock out and tag out.
   - Open the main disconnecting device of the drive.
   - Open the charging switch if present.
   - Open the disconnector of the supply transformer. (The main disconnecting device in the drive cabinet does not disconnect the voltage from the AC input power busbars of the drive cabinet.)
   - If the drive is equipped with a DC/DC converter unit (optional): Open the DC switch/disconnector ([Q11], option +F286) of the DC/DC converter. Open the disconnecting device of the energy storage connected to the DC/DC converter unit (outside the drive cabinet).

- Open the auxiliary voltage switch-disconnector (if present), and all other possible disconnecting devices that isolate the drive from dangerous voltage sources.
- In the liquid cooling unit (if present), open the motor protective circuit breaker(s) of the cooling pumps.
- If you have a permanent magnet motor connected to the drive, disconnect the motor from the drive with a safety switch or by other means.
- Make sure that re-connection is not possible. Lock out and tag out.
- Disconnect any dangerous external voltages from the control circuits.
- After you disconnect power from the drive, always wait 5 minutes to let the intermediate circuit capacitors discharge before you continue.

4. Protect any other energized parts in the work location against contact.
5. Take special precautions when close to bare conductors.
6. Measure that the installation is de-energized. If the measurement requires removal or disassembly of shrouding or other cabinet structures, obey the local laws and regulations applicable to live working (including – but not limited to – electric shock and arc protection).
   - Use a multimeter with an impedance greater than 1 Mohm.
   - Make sure that the voltage between the drive input power terminals (L1, L2, L3) and the grounding (PE) busbar is close to 0 V.
   - Make sure that the voltage between the drive DC busbars (+ and -) and the grounding (PE) busbar is close to 0 V.
   - If you have a permanent magnet motor connected to the drive, make sure that the voltage between the drive output terminals (T1/U, T2/V, T3/W) and the grounding (PE) busbar is close to 0 V.

WARNING!
The busbars inside the cabinet are partially coated. Measurements made through the coating are potentially unreliable, so only measure at uncoated portions. Note that the coating does not constitute a safe or touch-proof insulation.

7. Install temporary grounding as required by the local regulations.
8. Ask the person in control of the electrical installation work for a permit to work.

Checking the insulation of brake resistor and resistor cable

WARNING!
Obey the safety instructions of the drive. If you ignore them, injury or death, or damage to the equipment can occur.

If you are not a qualified electrician, do not do installation or maintenance work.

1. Stop the drive and do the steps in section *Electrical safety precautions (page 29)* before you start the work.
2. Check that the resistor cable is connected to the resistor and disconnected from the drive output terminals.
3. At the drive end, connect the R+ and R- conductors of the resistor cable together. Measure the insulation resistance between the conductors and the PE conductor with a measuring voltage of 1000 V DC. The insulation resistance must be higher than 1 Mohm.

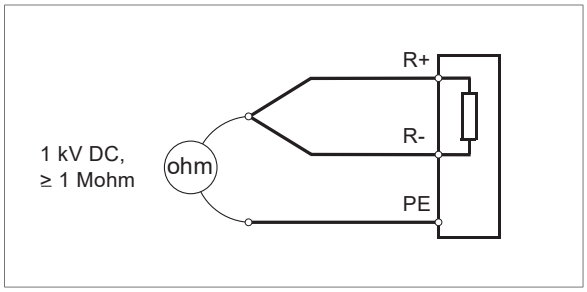

Connecting the brake resistor cables and thermal switch

Connection diagram

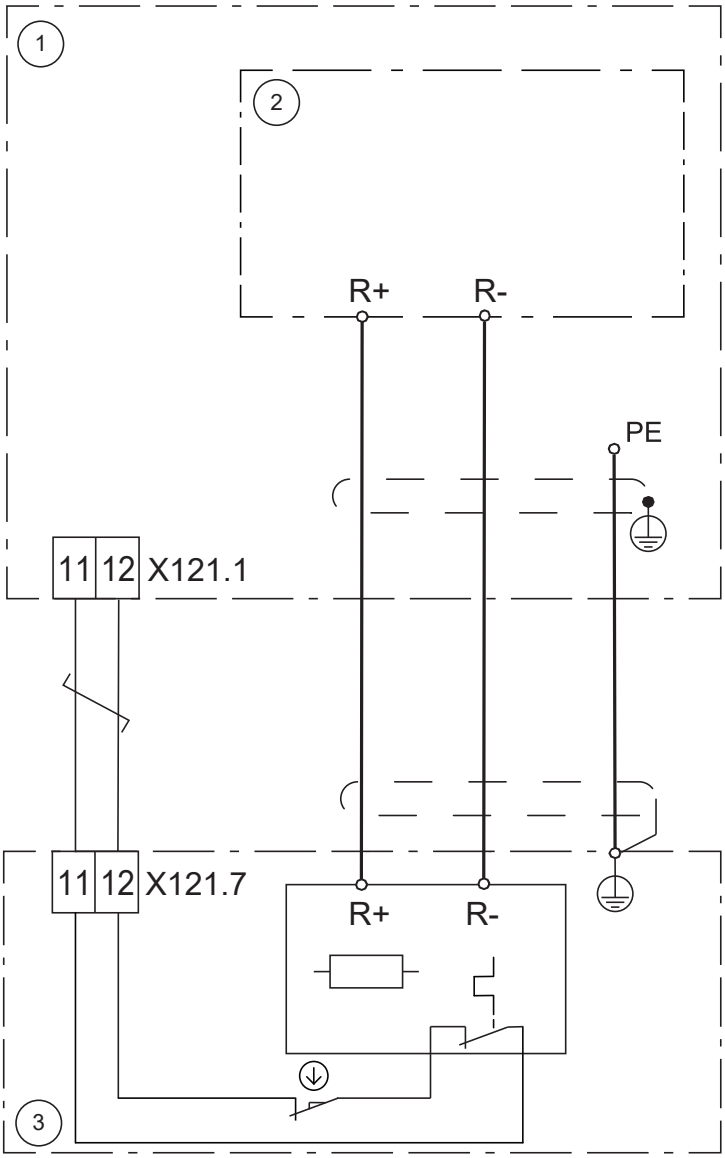

1	Brake chopper cubicle (all connections done at the factory)
2	Brake chopper module
3	Brake resistor cabinet

Connection procedure

WARNING!
Obey the safety instructions of the drive. If you ignore them, injury or death, or damage to the equipment can occur.

If you are not a qualified electrician, do not do installation or maintenance work.

1. Stop the drive and do the steps in section *Electrical safety precautions (page 29)* before you start the work.
2. Open the door of the brake chopper cubicle and remove the shrouding.
3. Connect the resistor cables:
   - Connect the power cable between the brake chopper and the brake resistor. Note the connection of the third conductor and the cable shield. See the connection diagram.

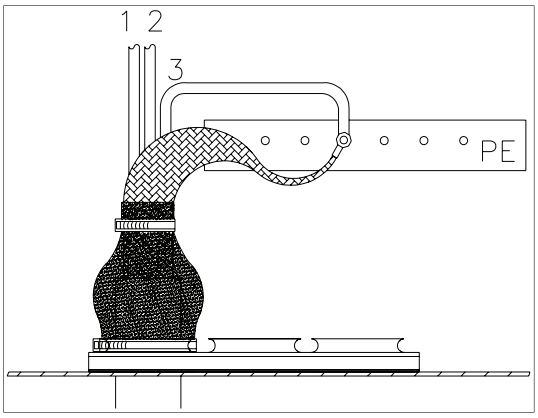

   - Connect the power cables of parallel brake resistors as shown below.

     Note: The cable between the chopper and the first resistor must be able to carry the entire braking power. Provide adequate support for the cables below the chopper and resistor units.

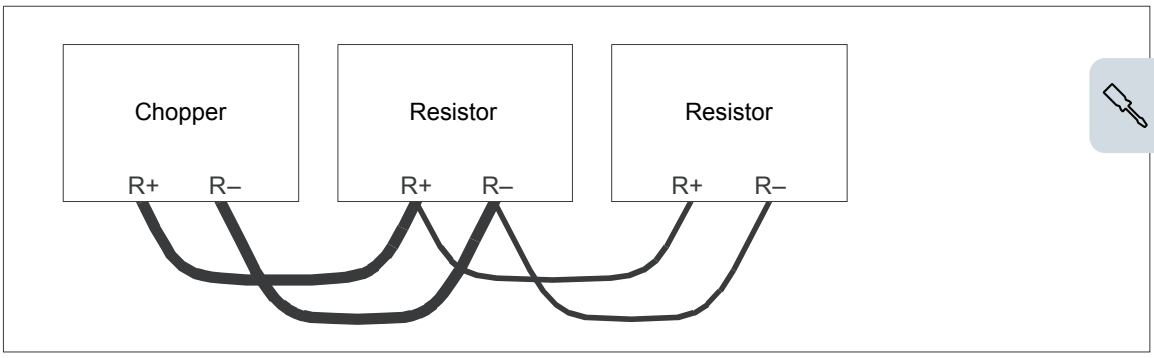

   - Connect the cable between the brake chopper cubicle and the resistor monitoring circuit. See the connection diagram.

   Factory installed brake resistors (option +D151):
   - Connect the cable between the brake resistor cabinet and a user-defined 230 V AC power supply. See the circuit diagrams delivered with the unit.
   - Connect the cabling between the brake resistor fan control circuit and the brake chopper cubicle. See the circuit diagrams delivered with the unit.

   User-defined brake resistors:
   - Connect the possible additional cabling between the brake chopper cubicle and the brake resistor cabinet. See the circuit diagrams delivered with the unit.
   - Make the possible user-defined connections to the brake resistor cabinet.

6

Installation checklist of the drive

Contents of this chapter

This chapter contains a checklist of the mechanical and electrical installation of the drive.

Checklist

Examine the mechanical and electrical installation of the drive before start-up. Go through the checklist together with another person.

WARNING!
Obey the safety instructions of the drive. If you ignore them, injury or death, or damage to the equipment can occur.

If you are not a qualified electrician, do not do installation or maintenance work.

WARNING!
Stop the drive and do the steps in section *Electrical safety precautions (page 29)* before you start the work.

Make sure that …	☑
The ambient operating conditions meet the drive ambient conditions specification, and enclosure rating (IP code or UL enclosure type).	☐
The supply voltage matches the nominal input voltage of the drive. See the type designation label.	☐
The drive cabinet has been attached to floor, and if necessary due to vibration etc, also by its top to the wall or roof.	☐
If the drive is connected to a network other than a symetrically grounded TN-S system: Check the compatibility. See the electrical installation instructions in the supply unit manual.	☐
There is an adequately sized protective earth (ground) conductor between the drive and the switchboard, the conductor has been connected to appropriate terminal, and the terminal has been tightened to the proper torque. Proper grounding has also been measured according to the regulations.	☐

Make sure that …	☑
The input power cable has been connected to the appropriate terminals, the phase order is right, and the terminals have been tightened to the proper torque.	☐
There is an adequately sized protective earth (ground) conductor between the motor and the drive, and the conductor has been connected to appropriate terminal, and the terminal has been tightened to the proper torque. (Pull on the conductors to check.). Proper grounding has also been measured according to the regulations.	☐
The motor cable has been connected to the appropriate terminals, the phase order is right, and the terminals have been tightened to the proper torque.	☐
The motor cable has been routed away from other cables.	☐
No power factor compensation capacitors have been connected to the motor cable.	☐
If an external brake resistor has been connected to the drive: There is an adequately sized protective earth (ground) conductor between the brake resistor and the drive, and the conductor has been connected to appropriate terminal, and the terminals have been tightened to the proper torque. (Pull on the conductors to check.) Proper grounding has also been measured according to the regulations.	☐
If an external brake resistor has been connected to the drive: The brake resistor has been connected to the appropriate terminals, and the terminals have been tightened to the proper torque.	☐
If an external brake resistor has been connected to the drive: The brake resistor cable has been routed away from other cables.	☐
The control cables have been connected to the appropriate terminals, and the terminals have been tightened to the proper torque.	☐
The voltage setting of the auxiliary voltage transformers (if any) is correct. See the electrical installation instructions.	☐
If a drive bypass connection will be used: The direct-on-line contactor of the motor and the drive output contactor are either mechanically and/or electrically interlocked, ie, cannot be closed simultaneously. A thermal overload device must be used for protection when bypassing the drive. Refer to local codes and regulations.	☐
There are no tools, foreign objects or dust from drilling inside the drive.	☐
Cover(s) of the motor connection box are in place. Cabinet shrouds are in place and doors are closed.	☐
The motor and the driven equipment are ready for start.	☐
The coolant connections between cubicles (if any) and to the cooling circuit are tight.	☐
If the drive is equipped with a cooling unit: Refer to the cooling unit documentation for specific tasks.	☐

7

Start-up

Contents of this chapter

This chapter contains the start-up procedure of the brake unit. The symbols in brackets, for example [Q1], refer to the item designations used in the circuit diagrams.

If a task is valid only for a certain option device or feature, the option code is given in brackets, for example, (option +F286).

Start-up procedure

Tasks	☑
Safety	
WARNING! Obey the safety instructions of the drive. If you ignore them, injury or death, or damage to the equipment can occur. If you are not a qualified electrician, do not do installation or maintenance work. **Note:** Some brake resistors are coated with oil film for protection. The protective oil will burn off when the brake resistor is used for the first time. Make sure that the airflow is sufficient.	☐
Installation checklist	
Make sure that the installation has been inspected. See the installation checklist.	☐
Supply and inverter units start-up	
Make sure that the supply unit of the drive system has been started up according to the instructions in its hardware manual.	☐
Make sure that the inverter units of the drive system have been started up according to the instructions in their hardware manual.	☐

Tasks	☑
Make sure that the supply unit is stopped, and the drive system has been isolated from the supply network.	☐
Powering up the DC bus	
Make sure that all cabinet doors are closed.	☐
Close the disconnector of the supply transformer.	☐
Close the drive auxiliary voltage switch [Q21] to power up the control units.	☐
Start the supply unit. See the supply unit hardware manual. When started, the supply unit charges the capacitors of all inverters and brake units connected to the DC bus.	☐
In all inverter units, disable the overvoltage control (30.30).	☐
Connect a Drive composer PC tool to an inverter unit that is suitable for the brake chopper testing (ie. it runs a high inertia motor that generates power to the drive when decelerated).	☐
Tune a suitable deceleration time setting (23.13) for the motor: make it short enough to cause generation back to the drive and start the brake chopper. Do not make it too short not to exceed the capacity of the brake chopper and resistor.	☐
Operational tests	
Test the operation of the braking. Start the test inverter and motor, accelerate and decelerate. During the deceleration, monitor the drive DC bus voltage (with the Drive composer PC tool) and the brake chopper. Make sure that the brake chopper starts when the DC link voltage exceeds the brake operation limit.	☐

8

Fault tracing

Contents of this chapter

This chapter describes the fault tracing possibilities of the brake unit.

Fault indications

A fault in the resistor braking circuit prevents fast motor deceleration, and may cause the drive to trip on a fault.

If a fault is detected by the chopper control board, the brake chopper disconnects the brake resistor from the intermediate circuit, and the chopper fault indication relay output is de-energized.

Depending on the application, the relay output either opens the drive main circuit breaker or gives a fault indication to the overriding control system. See the circuit diagrams delivered with the unit.

Fault indication/Fault	Cause	Remedy
Fault indication relay output switches off the main power or gives a fault indication to an overriding control system.	Chopper or resistor overheated.	Check connections. Let equipment cool.
	No enable input received by chopper control board.	Check that enable input is on.
	Short circuit in resistor or power cables.	Check power cables and resistor.
	Chopper control board failure. Chopper damaged; it is not able to disconnect resistor from intermediate circuit.	Contact local ABB representative.

Fault indication/Fault	Cause	Remedy
Chopper does not function.	Chopper voltage setting too high. Inverter overvoltage control is on.	Check voltage setting. Check parameters of all inverters. Check that enable input is on.
Chopper starts to function at too low a DC voltage.	Chopper voltage setting too low.	Check voltage setting.
Inverter trips on fault *3210 DC link overvoltage*.	Chopper voltage setting is too high.	Check voltage setting. Check parameters of all inverters.
Brake resistor or chopper overheats.	The maximum brake cycle exceeded or resistor cooling insufficient.	Check duty cycle and resistor cooling.
	Chopper voltage setting incorrect or jumper missing.	Ensure that voltage setting is correct and jumper is properly in place.

Fan supervision

See *CIO-01 I/O module for distributed I/O bus control user's manual* (3AXD50000126880 [English]).

Selecting the voltage

The voltage is preset, according to the drive supply voltage, at the factory for each brake chopper. On the field, you need to adjust the voltage setting only if a brake chopper is changed.

WARNING!
Obey the safety instructions of the drive. If you ignore them, injury or death, or damage to the equipment can occur.

If you are not a qualified electrician, do not do installation or maintenance work.

To adjust the setting:

1. Stop the drive and do the steps in section *Electrical safety precautions (page 29)* before you start the work.
2. Remove the chopper front panel by undoing the four screws at the top and bottom of the panel.
3. Set the voltage selection jumper on the chopper control board to the appropriate voltage as shown below.

Drive supply voltage 380…415 V	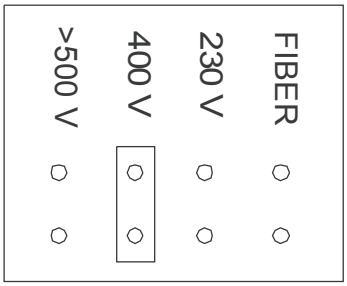
Drive supply voltage 440…500 V	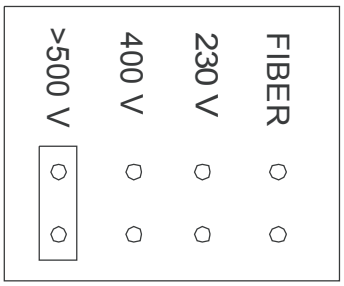
Drive supply voltage 525…690 V	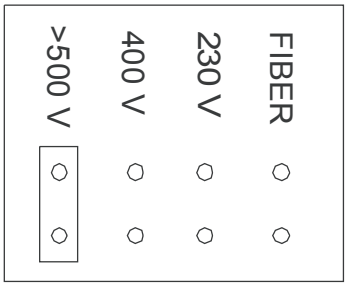

Note: If you have parallel choppers which are synchronized through the fiber optic link (master-follower connection):

- select the voltage in the master chopper only
- set the voltage jumper to FIBER in the follower choppers.

WARNING!
An incorrect jumper setting or missing jumper may cause brake chopper malfunctioning or damage to the chopper or resistor.

9

Maintenance

Contents of this chapter

This chapter describes the maintenance of a brake unit.

Maintenance intervals

The table below shows the maintenance tasks which can be done by the end user. The complete maintenance schedule is available on the Internet (www.abb.com/drivesservices). For more information, consult your local ABB Service representative (www.abb.com/searchchannels).

Maintenance task/object	Years from start-up													
	0	1	2	3	4	5	6	7	8	9	10	11	12	…
Coolant														
Checking coolant antifreeze concentration		P	P	P	P	P	P	P	P	P	P	P	P	
Checking coolant quality			P		P		P		P		P		P	
Coolant draining and replacement							R						R	
Cooling fan														
Cooling fans (chopper and resistor)										R				
Inspections														
Checking tightness of cable and busbar terminals. Tightening if needed.		I	I	I	I	I	I	I	I	I	I	I	I	I
Checking ambient conditions (dustiness, corrosion, temperature)		I	I	I	I	I	I	I	I	I	I	I	I	I
Checking coolant pipe connections		I	I	I	I	I	I	I	I	I	I	I	I	I

Symbols

I **Inspection** (visual inspection and maintenance action if needed)

P **Performance** of on/off-site work (commissioning, tests, measurements or other work)

R **Replacement**

Maintenance and component replacement intervals are based on the assumption that the equipment is operated within the specified ratings and ambient conditions. ABB recommends annual drive inspections to ensure the highest reliability and optimum performance.

Note:

Long term operation near the specified maximum ratings or ambient conditions may require shorter maintenance intervals for certain components. Consult your local ABB Service representative for additional maintenance recommendations.

Cooling system

For instructions on coolant replacement and checking the cooling system, see chapter *Internal cooling circuit*.

Retightening the power connections

WARNING!
Read the safety instructions given in *Safety instructions for ACS880 liquid-cooled multidrive cabinets and modules* (3AXD50000048633 [English]). If you ignore them, injury or death, or damage to the equipment can occur.

1. Repeat the steps described in section *Electrical safety precautions (page 29)*.
2. Check the tightness of the cable connections. Use the tightening torques given in the technical data.

Replacing cooling fans

The lifespan of the cooling fans of the drive depends on the running time, ambient temperature and dust concentration. See the firmware manual for the actual signal which indicates the running time of the cooling fan. Reset the running time signal after fan replacement.

Replacement fans are available from ABB. Do not use other than ABB specified spare parts.

Brake chopper cubicle

WARNING!
Wear protective gloves and long sleeves. Some parts have sharp edges.

1. Stop the drive and do the steps in section *Electrical safety precautions (page 29)* before you start the work.
2. Remove any shrouding in front of the cooling fan.
3. Disconnect the fan wiring.
4. Undo the fastening screws.
5. Pull the fan housing outwards.
6. Install a new fan in reverse order.

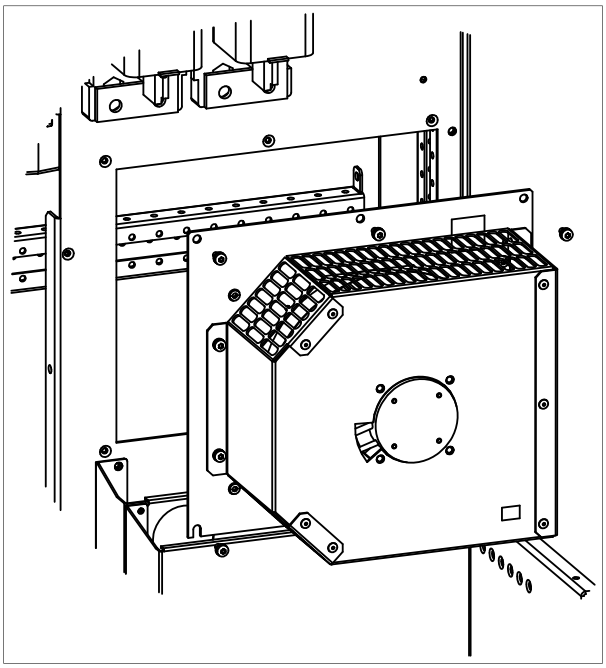

Brake resistor cabinet (option +D151)

WARNING!
Wear protective gloves and long sleeves. Some parts have sharp edges.

1. Stop the drive and do the steps in section *Electrical safety precautions (page 29)* before you start the work.
2. Remove any shrouding in front of the cooling fans.
3. Disconnect the fan wiring.
4. Undo the two fastening screws (a).
5. Pull the fan housing outwards.
6. Install a new fan in reverse order.

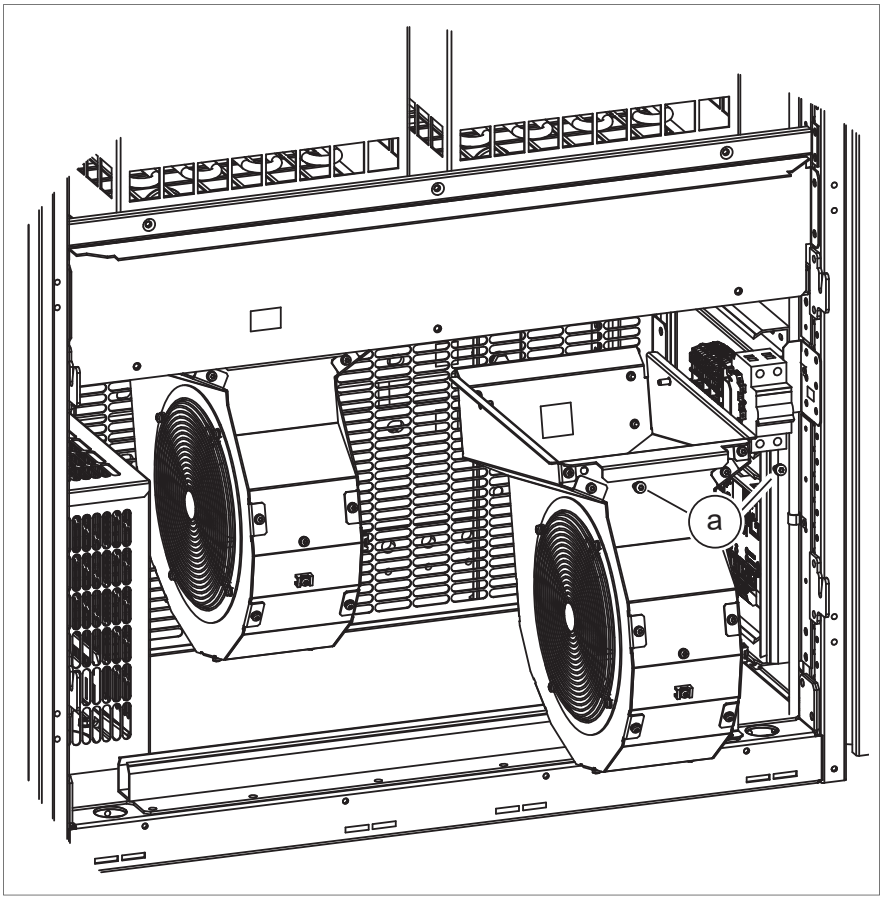

10

Internal cooling circuit

Contents of this chapter

The cooling system of a liquid-cooled drive consists of two circuits: the internal cooling circuit and the external cooling circuit. The internal cooling circuit covers the heat-generating electrical components of the drive and transfers the heat to the cooling unit. In the cooling unit, the heat is transferred to the external cooling circuit which is usually part of a larger external cooling system. This chapter deals with the internal cooling circuit.

Applicability

The information in this chapter is applicable to cabinet-built ACS880 liquid-cooled drives. Except where otherwise indicated, the information is also applicable to drives built out of ACS880 liquid-cooled multidrive modules.

Internal cooling system

Note: This section describes cabinet-built, liquid-cooled ACS880 drives. The information in this section can be used as guidelines for building a drive system out of ACS880 liquid-cooled modules.

Each cubicle has an inlet and an outlet manifold, fitted with a stop valve and a drain valve. The stop valves can be closed to isolate all modules in the cubicle from the main cooling circuit.

The following diagram shows the coolant pipe connections in a drive system consisting of a supply unit and an inverter unit.

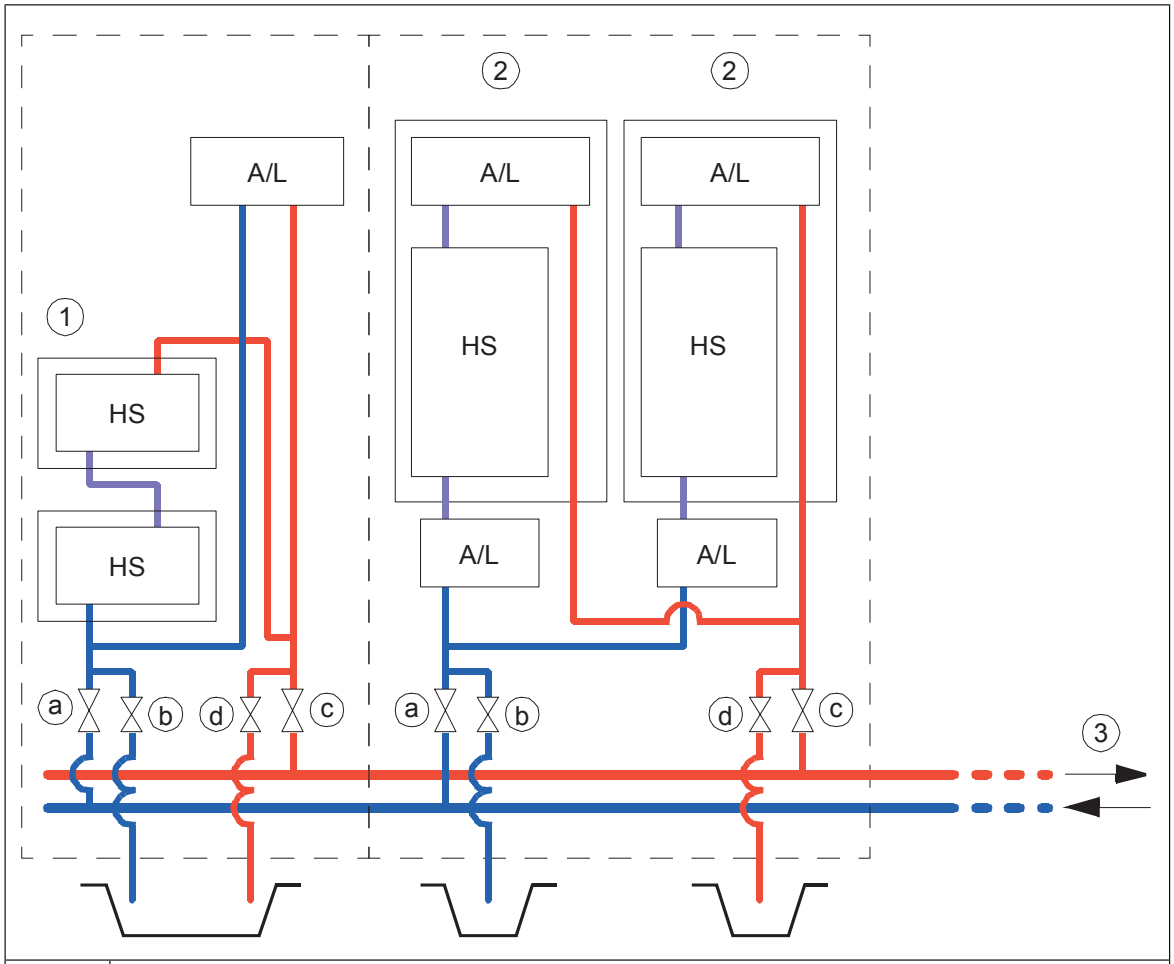

1	Supply modules
2	Inverter modules
3	To/From cooling unit
A/L	Air-to-liquid heat exchanger
HS	Heat sink
a	Inlet valve
b	Inlet-side drain valve
c	Outlet valve
d	Outlet-side drain valve

The coolant used with ACS880 liquid-cooled drive systems is Antifrogen® L 25% or 50% water mixture. See *Coolant specification (page 52)*.

Connection to a cooling unit

Connection to an ACS880-1007LC cooling unit

Refer to *ACS880-1007LC cooling unit user's manual* (3AXD50000129607 [English]).

Connection to a custom cooling unit

General requirements

Equip the system with an expansion tank to damp pressure rise due to volume changes when the temperature varies. Equip the system with a pump that provides a nominal flow and pressure. Keep the pressure within the limits specified in *Technical data (page 52)*. Install a pressure regulator to make sure that the maximum permissible operating pressure is not exceeded.

Install a bleed valve at the highest point of the cooling circuit, and a drain valve at the lowest point.

The materials that can be used are listed in *Cooling circuit materials (page 54)*.

Coolant temperature control

The temperature of the coolant in the internal cooling circuit must be kept within the limits specified in *Technical data (page 52)*. Note that the minimum temperature is dependent on ambient temperature and relative humidity.

Filling up and bleeding the internal cooling circuit

Both the drive and coolant must be at room temperature before filling up the cooling circuit.

WARNING!
Make sure that the maximum permissible operating pressure is not exceeded. When necessary regulate the pressure to appropriate level by draining excess coolant out of the system.

WARNING!
Bleeding of the cooling circuit is very important and has to be done with great care. Air bubbles in the cooling circuit may reduce or completely block coolant flow and lead to overheating. Let the air out of the cooling system while filling in coolant and, eg. after any power module replacements.

Drive line-ups with an ACS880-1007LC cooling unit

Follow the filling up and bleeding instructions in *ACS880-1007LC cooling unit user's manual* (3AXD50000129607 [English]).

Drive line-ups with a custom cooling unit

Note:

- In filling up the system, the drain valves in the line-up are used only to vent the air from the circuit so that it can be displaced by the coolant. The actual bleeding of the circuit must be done via an external bleed valve installed at the highest point of the cooling circuit. The most practical location for the valve is usually near or at the cooling unit.
- Observe the instructions given by the manufacturer of the cooling unit. Pay special attention to filling up and bleeding the pumps properly as they may be damaged if operated when dry.
- Draining coolant into the sewer system is not allowed.

1. Open the bleed valve at the cooling unit.
2. Open the inlet valve and the outlet-side drain valve of one cubicle. Keep the outlet valve and the inlet-side drain valve closed.
3. Attach a hose to the outlet-side drain valve and lead it into a suitable container.
4. Fill the circuit with coolant. For coolant specification, see *Coolant specification (page 52)*.

   Note: To minimize foaming, do not exceed the filling flow rate of 5 l/min (1.3 US gallon/min).

5. As the piping and modules in the cubicle fills up, coolant starts to flow from the hose. Let some coolant flow out, then close the drain valve.
6. Close the inlet valve.
7. Repeat steps 2 to 6 for all cubicles in the line-up.
8. Open the inlet and outlet valves in all cubicles. Let any air remaining in the system out through the bleed valve at the cooling unit.
9. Close the bleed valve at the cooling unit.
10. Continue to fill in coolant until a base pressure of 100…150 kPa is achieved.
11. Open the bleed valve of the pump to let out any air.
12. Re-check the pressure and add coolant if necessary.

13. Start the coolant pump. Let any air remaining in the system out through the bleed valve at the cooling unit.
14. After one to two minutes, stop the pump or block the coolant flow with a valve.
15. Re-check the pressure and add coolant if necessary.
16. Repeat steps 13 to 15 a few times until all air is let out of the cooling circuit. Listen for a humming sound and/or feel the piping for vibration to find out if there is still air left in the circuit.

Draining the internal cooling circuit

The modules in each cubicle can be drained through the drain valves without draining the whole internal cooling circuit.

WARNING!
Hot, pressurized coolant can be present in the cooling circuit. Do not work on the cooling circuit before the pressure is released by stopping the pumps and draining coolant.

1. Attach hoses to each drain valve in the cubicle to be drained. Lead the hoses into a suitable container. Make sure the ends of the hoses are not immersed in coolant at any point so that air can displace the coolant in the system.
2. Open the drain valves. Wait until all coolant has drained.

   Note: Draining coolant into the sewer system is not allowed.

3. If required, dry the piping with compressed oil-free air of less than 6 bar.
4. If the drive is to be stored in temperatures below 0 °C (32 °F),
   - dry the cooling circuit with air,
   - fill the cooling circuit with coolant specified under *Coolant specification (page 52)*.
   - drain the cooling circuit again.

Maintenance intervals

As a general rule, the quality of the coolant should be checked at intervals of two years. This can be done by distributors of Antifrogen® L (see www.clariant.com) if a 250 milliliter sample is provided.

Technical data

Coolant specification

Coolant type

Antifrogen® L (by Clariant International Ltd, www.clariant.com) 25% or 50% water mixture, available from Clariant distributors and ABB Service representatives.

Antifrogen® L 25% mixture is usable in storage temperatures down to -16 °C (3.2 °F).
Antifrogen® L 50% mixture is usable in storage temperatures down to -40 °C (-40 °F).

Note that operation below 0 °C (32 °F) is not allowed regardless of the freezing point of the coolant.

WARNING!
The warranty does not cover damage occurring from use of improper coolant.

Temperature limits

Ambient temperature: See the technical data of the drive/unit.

Freeze protection: The freezing point of the coolant is determined by the concentration of heat transfer fluid in the mixture.

The higher the concentration of heat transfer fluid, the higher the viscosity of the coolant. This results in a higher pressure loss in the system. See *Pressure limits (page 54)*.

The nominal current ratings of drive system modules apply to an Antifrogen® L / water solution of 25/75% (volume). With the Antifrogen® L concentration between 25% and 50%, the drive output current must be derated by 1/3 percentage point per 1 p.p. increase in Antifrogen® L concentration. The drawing below shows the derating factor *(k)* in relation to Antifrogen® L concentration.

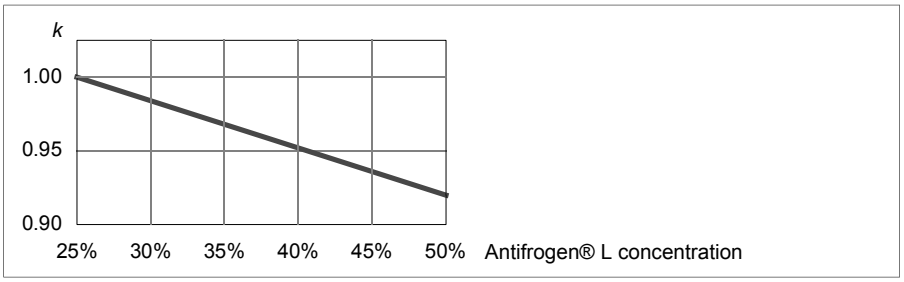

Incoming coolant temperature:

- 0…40 °C (32…104 °F): no drive output current derating required
- 40…45 °C (104…113 °F): drive output current must be derated by 2 percentage points per 1 °C (1.8 °F) temperature increase, as shown by curve (a).
- 45…50 °C (113…122 °F):
  - If components with a maximum operating temperature of 55 °C (131 °F) are installed in the same space as the drive modules, drive output current must be derated by 6 percentage points per 1 °C (1.8 °F) temperature increase, as shown by curve (c).
  - If there are no components with a maximum operating temperature of 55 °C (131 °F) installed in the same space as the drive modules, drive output current must be derated by 2 percentage points per 1 °C (1.8 °F) temperature increase, as shown by curve (b).

The drawing below shows the derating factor *(k)* in relation to coolant temperature.

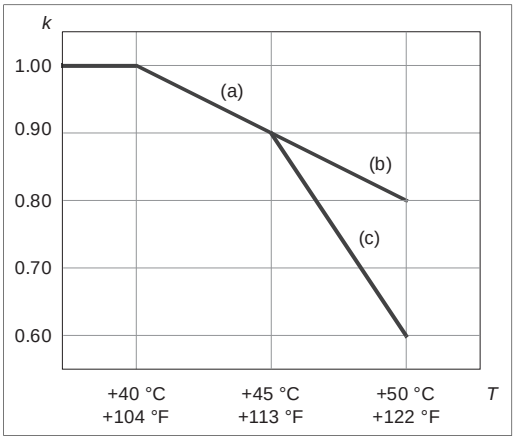

Condensation is not allowed. The minimum coolant temperature to avoid condensation (at an atmospheric pressure of 1 bar) is shown below as a function of relative humidity (RH) and ambient temperature (T_{air}).

T_{air} (°C)	Min. $T_{coolant}$ (°C)				
	RH = 95%	**RH = 80%**	**RH = 65%**	**RH = 50%**	**RH = 40%**
5	4.3	1.9	-0.9	-4.5	-7.4

T_{air} (°C)	Min. $T_{coolant}$ (°C)				
	RH = 95%	RH = 80%	RH = 65%	RH = 50%	RH = 40%
10	9.2	6.7	3.7	-0.1	-3.0
15	14.2	11.5	8.4	4.6	1.5
20	19.2	16.5	13.2	9.4	6.0
25	24.1	21.4	17.9	13.8	10.5
30	29.1	26.2	22.7	18.4	15.0
35	34.1	31.1	27.4	23.0	19.4
40	39.0	35.9	32.2	27.6	23.8
45	44.0	40.8	36.8	32.1	28.2
50	49.0	45.6	41.6	36.7	32.8
55	53.9	50.4	46.3	42.2	37.1
	= Not allowed as standard but the coolant temperature must be 0 °C (32 °F) or above.				
Example:	At an air temperature of 45 °C and relative humidity of 65% the coolant temperature may not be below +36.8 °C				

Maximum temperature rise: Depends on heat losses and mass flow. Typically 10 °C (18 °F) with nominal losses and flow.

Pressure limits

Base pressure: 100 … 150 kPa (recommended); 200 kPa (maximum). “Base pressure” denotes the pressure of the system compared with the atmospheric pressure when the cooling circuit is filled with coolant.

Air counterpressure in the expansion tank: 40 kPa

Design pressure (PS): 600 kPa

Nominal pressure difference (between main in/out lines): 120 kPa with 25/75% (volume) coolant solution, 150 kPa with 50/50% (volume) coolant solution. This has to be taken into account when dimensioning the liquid cooling circuit.

Maximum pressure difference (between main in/out lines): 200 kPa

Coolant flow rate limits

The maximum coolant flow rate for all drive equipment is 1.3 × nominal. See the technical data chapter for nominal values.

Cooling circuit materials

Materials used in the internal cooling circuit are listed below. These are also the only materials that can be used in the external cooling circuit.

- stainless steel AISI 316L (UNS 31603)
- heavy gauge aluminum
- plastic materials such as PA, PEX and PTFE

  Note: PVC hoses are not suitable for use with antifreeze.

- rubber gasketing NBR (nitrile rubber).

WARNING!
If connecting external piping to the internal cooling circuit, use only materials that are specified above. Copper, brass or bronze must not be used under any circumstances. Even minor dissolution of copper can cause copper precipitation on aluminum and subsequent galvanic corrosion. The liquid cooling system must not contain any zinc (eg. galvanized pipes).

If the plant incorporates normal iron pipes or cast iron accessories (eg. motor housings), a cooling unit with a heat exchanger (such as the ACS880-1007LC) must be used to separate the systems.

11

Technical data

Contents of this chapter

This chapter contains the technical specifications of the brake unit, for example, the ratings, sizes and technical requirements, provisions for fulfilling the requirements for CE and other markings.

Ratings

Brake chopper only

These brake units are not equipped with brake resistors or fans. The resistors must be selected according to the specifications and installed by the user.

ACS880-607LC-…	Module type	P_{brmax}	R_n	I_{max}	I_{rms}	P_{cont}	Duty cycle (1/5 min)		Duty cycle (10/60 s)	
							P_{br}	I_{rms}	P_{br}	I_{rms}
		kW	ohm	A	A	kW	kW	A	kW	A
0400-7	NBRW-669C	404	2.72	414	107	119	298	267	404	361
0800-7	2 × NBRW-669C	807	2.72	828	214	238	596	534	808	722
1200-7	3 × NBRW-669C	1211	2.72	1242	321	357	894	801	1212	1083
1600-7	4 × NBRW-669C	1615	2.72	1656	428	476	1192	1068	1616	1444
2000-7	5 × NBRW-669C	2019	2.72	2070	535	595	1490	1335	2020	1805
2400-7	6 × NBRW-669C	2422	2.72	2484	642	714	1788	1602	2424	2166

Brake chopper with factory-installed brake resistors (option +D151)

ACS880-607LC-…	Module type	Resistor type	P_{brmax}	R_{min}	I_{max}	I_{rms}	P_{brcont}	Duty cycle (1/5 min)		Duty cycle (10/60 s)		E_R
								P_{br}	I_{rms}	P_{br}	I_{rms}	
			kW	ohm	A	A	kW	kW	A	kW	A	kJ
0400-7	NBRW-669C	2 × SAFUR200F500	404	1.35	835	97	54	167	149	287	257	10800
0800-7	2 × NBRW-669C	2 × (2 × SAFUR200F500)	807	1.35	1670	194	108	333	298	575	514	21600
1200-7	3 × NBRW-669C	3 × (2 × SAFUR200F500)	1211	1.35	2505	291	162	500	447	862	771	32400
1600-7	4 × NBRW-669C	4 × (2 × SAFUR200F500)	1615	1.35	3340	388	216	667	596	1150	1028	43200
2000-7	5 × NBRW-669C	5 × (2 × SAFUR200F500)	2019	1.35	4175	485	270	833	745	1437	1285	54000
2400-7	6 × NBRW-669C	6 × (2 × SAFUR200F500)	2422	1.35	5010	582	324	1000	894	1724	1542	64800

Definitions

Example: ACS880-607LC-0800-7

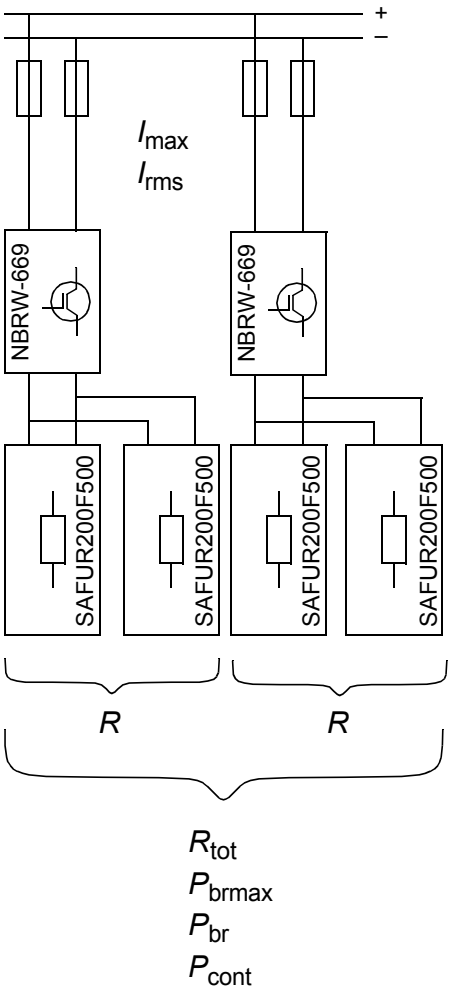

Brake unit

E_R	Energy pulse that all the resistors of the unit put together will withstand (400 s duty cycle). This energy will heat the resistor elements from 40°C to the maximum allowable temperature.
I_{max}	Maximum peak current of the whole brake unit
P_{brcont}	Maximum continuous power rating
P_{brmax}	Maximum short-term (1 min every 10 mins) braking power
R	Resistance of specified resistors (per chopper module). This is also the minimum allowed resistance for the resistor assembly.
R_{tot}	Total brake resistor resistance of the whole brake unit

Duty cycle (10 s / 60 s)

I_{rms}	Total rms current during a period of 10 seconds with braking power P_{br}
P_{br}	Maximum braking power, allowed for 10 seconds every 60 seconds

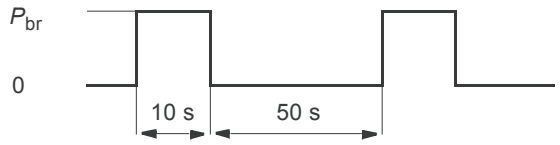

Duty cycle (1 min / 5 min)

I_{rms}	Total rms current during a period of 1 minute with braking power P_{br}
P_{br}	Maximum braking power, allowed for 1 minute every 5 minutes

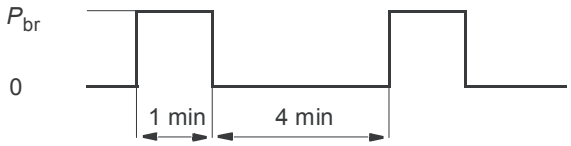

Brake current wave form

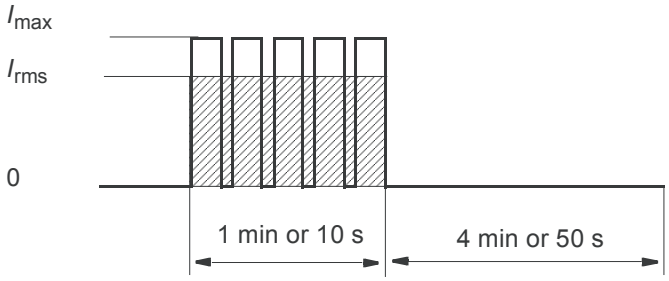

DC fuses

ACS880-607LC-…	Fuse type	Qty	U_N V	I_N A
U_N = 690 V (Range 525…690 V)				
0400-7	170M5146	2	1250	630
0800-7	170M5146	4	1250	630
1200-7	170M5146	6	1250	630
1600-7	170M5146	8	1250	630
2000-7	170M5146	10	1250	630
2400-7	170M5146	12	1250	630

Dimensions, weights and free space requirements

Brake chopper only

ACS880-607LC-…	Height		Width		Depth		Weight[1)]	
	mm	in.	mm	in.	mm	in.	kg	lb
U_N = 690 V								
0400-7	2002	78.82	400	15.75	600	23.62	215	474
0800-7	2002	78.82	800	31.50	600	23.62	250	551
1200-7	2002	78.82	1200	47.24	600	23.62	465	1025
1600-7	2002	78.82	1600	62.99	600	23.62	500	1102
2000-7	2002	78.82	2000	78.74	600	23.62	715	1576
2400-7	2002	78.82	2400	94.49	600	23.62	750	1653
1) Coolant included								

Brake chopper with factory-installed brake resistors (option +D151)

ACS880-607LC-…	Height		Width		Depth		Weight	
	mm	in.	mm	in.	mm	in.	kg	lb
U_N = 690 V								
0400-7	2002	78.82	1200	47.24	600	23.62	340	750
0800-7	2002	78.82	2400	94.49	600	23.62	680	1500
1200-7	2002	78.82	3600	141.73	600	23.62	1020	2249
1600-7	2002	78.82	4800[1)]	188.98[1)]	600	23.62	1360	2998
2000-7	2002	78.82	6000[1)]	236.22[1)]	600	23.62	1700	3748
2400-7	2002	78.82	7200[1)]	283.46[1)]	600	23.62	2040	4497
1) An additional 300 mm junction section is needed.								

Losses, cooling data and noise

Brake chopper only

ACS880-607LC-…	Module type	Power loss		Coolant					Noise
		Into coolant kW	Into air kW	Volume		Flow rate		Pres-sure loss	dB(A)
				l	US gal	l/min	US gal/min	kPa (PSI)	
U_N = 690 V (Range 525…690 V)									
0400-7	NBRW-669	1.9	0.1	3.1	0.68	1.6	0.42	120 (17.4)	65
0800-7	2 × NBRW-669	3.8	0.2	2 × 3.1	2 × 0.68	2 × 1.6	2 × 0.42	120 (17.4)	65
1200-7	3 × NBRW-669	5.6	0.4	3 × 3.1	3 × 0.68	3 × 1.6	3 × 0.42	120 (17.4)	68
1600-7	4 × NBRW-669	7.5	0.5	4 × 3.1	4 × 0.68	4 × 1.6	4 × 0.42	120 (17.4)	68
2000-7	5 × NBRW-669	9.4	0.6	5 × 3.1	5 × 0.68	5 × 1.6	5 × 0.42	120 (17.4)	69
2400-7	6 × NBRW-669	11.3	0.7	6 × 3.1	6 × 0.68	6 × 1.6	6 × 0.42	120 (17.4)	69

Brake chopper with factory-installed brake resistors (option +D151)

ACS880-607LC-…	Module type	Resistor type	Air flow		Noise
			m³/h	ft³/min	dB(A)
U_N = 690 V (Range 525…690 V)					
0400-7	NBRW-669	2 × SAFUR200F500	1840	1080	TBA
0800-7	2 × NBRW-669	2 × (2 × SAFUR200F500)	4340	2550	TBA
1200-7	3 × NBRW-669	3 × (2 × SAFUR200F500)	6180	3640	TBA
1600-7	4 × NBRW-669	4 × (2 × SAFUR200F500)	8020	4720	TBA
2000-7	5 × NBRW-669	5 × (2 × SAFUR200F500)	9860	5800	TBA
2400-7	6 × NBRW-669	6 × (2 × SAFUR200F500)	11700	6890	TBA

Terminal and lead-through data for the resistor cable for brake units with user-defined brake resistors

ACS880-607LC-…	R+, R-, grounding terminals			
	Number of holes	Hole diameter mm	Screw	Tightening torque N·m
U_N = 690 V (Range 525…690 V)				
0400-7	1	11	M10	35
0800-7	2	11	2×M10	35
1200-7	3	11	3×M10	35
1600-7	4	11	4×M10	35
2000-7	5	11	5×M10	35
2400-7	6	11	6×M10	35

The number of holes in the lead-through plate for the resistor cables is

- *n* × 3 × Ø60 mm (2.36”)

where n = 1…6 parallel-connected brake chopper modules.

Resistor cable sizes

ACS880-607LC-…	Resistor cable (Cu)* Multicore mm²
U_N = 690 V (Range 525…690 V)	
0400-7	3×95+50
0800-7	2×(3×95+50)
1200-7	3×(3×95+50)
1600-7	4×(3×95+50)
2000-7	5×(3×95+50)
2400-7	6×(3×95+50)
*Size of the cable between the brake chopper and the first resistor which carries the entire braking power.	

Maximum cable length

The maximum cable length of the resistor cable(s) is 50 m (164 ft).

Protection classes

Brake chopper cubicle

Degrees of protection (IEC/EN 60529)	IP42 (standard), IP54 (option +B055)
Enclosure types (UL50)	UL Type 1 (standard), UL Type 12 (option +B055). For indoor use only.
Overvoltage category (IEC/EN 60664-1)	III, except for auxiliary power connections (fan, control, heating, lighting, cooling unit pump etc) which are category II.
Protective class (IEC/EN 61800-5-1)	I

Ambient conditions

Environmental limits for the drive are given below. The drive is to be used in a heated, indoor, controlled environment.

	Operation installed for stationary use	**Storage in the protective package**	**Transportation in the protective package**
Installation site altitude	0…2000 m (0…6562 ft) above sea level. For altitudes over 2000 m, contact ABB. Output derated above 1000 m (3281 ft).	-	-
Air temperature	0 … +45 °C (+32 … +113 °F), no condensation allowed. Output derated in the range +45 … +55 °C (+113 … +131 °F).	-40 to +70 °C (-40 to +158 °F)	-40 to +70 °C (-40 to +158 °F)
Relative humidity	Max. 95%	Max. 95%	Max. 95%
	No condensation allowed. Maximum allowed relative humidity is 60% in the presence of corrosive gases.		
Contamination	IEC/EN 60721-3-3:2002: Classification of environmental conditions - Part 3-3: Classification of groups of environmental parameters and their severities - Stationary use of weather protected locations Chemical gases: Class 3C2 Solid particles: Class 3S2. No conductive dust allowed.	IEC 60721-3-1:1997 Chemical gases: Class 1C2 Solid particles: Class 1S3 (packing must support this, otherwise 1S2)	IEC 60721-3-2:1997 Chemical gases: Class 2C2 Solid particles: Class 2S2

	Operation installed for stationary use	Storage in the protective package	Transportation in the protective package
Vibration IEC/EN 61800-5-1 IEC 60068-2-6:2007, EN 60068-2-6:2008 Environmental testing Part 2: Tests –Test Fc: Vibration (sinusoidal)	IEC/EN 60721-3-3:2002 10…57 Hz: max. 0.075 mm amplitude 57…150 Hz: 1 *g* Units with marine construction (option +C121): Max. 1 mm (0.04 in) (5 … 13.2 Hz), max. 0.7 *g* (13.2 … 100 Hz) sinusoidal	IEC/EN 60721-3-1:1997 10…57 Hz: max. 0.075 mm amplitude 57…150 Hz: 1 *g*	IEC/EN 60721-3-2:1997 2…9 Hz: max. 3.5 mm amplitude 9…200 Hz: 10 m/s^2 (32.8 ft/s^2)
Shock IEC 60068-2-27:2008, EN 60068-2-27:2009 Environmental testing - Part 2-27: Tests - Test Ea and guidance: Shock	Not allowed	With packing max. 100 m/s^2 (328 ft/s^2) 11 ms	With packing max. 100 m/s^2 (328 ft/s^2) 11 ms

Materials

Cabinet	• Zinc coated steel sheet • Polyester thermosetting powder coating on visible surfaces, color RAL 7035 and RAL 9017
Busbars for user power connections	Tin-plated copper
Liquid cooling system	See *Cooling circuit materials (page 54)*
Fire safety of materials (IEC 60332-1)	Insulating materials and non-metallic items: mostly self-extinctive
Package	Standard package: • timber, polyethylene sheet (thickness 0.15 mm), stretch film (thickness 0.023 mm), PP tape, PET strap, sheet metal (steel) • for land and air transport when planned storage time is less than 2 months or when storage can be arranged in clean and dry conditions less than 6 months • can be used when products will not be exposed to corrosive atmosphere during transport or storage Container package: • timber, VCI sheet film (PE, thickness 0.10 mm), VCI stretch film (PE, thickness 0.04 mm), VCI emitter bags, PP tape, PET strap, sheet metal (steel) • for sea transport in containers • recommended for land and air transport when storage time prior to installation exceeds 6 months or storage is arranged in partially weather-protected conditions Seaworthy package: • timber, plywood, VCI sheet film (PE, thickness 0.10 mm), VCI stretch film (PE, thickness 0.04 mm), VCI emitter bags, PP tape, PET strap, sheet metal (steel) • for sea transport with or without containerization • for long storage periods in environments where roofed and humidity-controlled storage cannot be arranged Cabinets are fastened to the pallet with screws and braced from the top end to the package walls to prevent swaying inside the package. Package elements are attached to each other with screws.
Disposal	The main parts of the drive can be recycled to preserve natural resources and energy. Product parts and materials should be dismantled and separated. Generally all metals, such as steel, aluminum, copper and its alloys, and precious metals can be recycled as material. Plastics, rubber, cardboard and other packaging material can be used in energy recovery. Printed circuit boards and large electrolytic capacitors need selective treatment according to IEC 62635 guidelines. To aid recycling, plastic parts are marked with an appropriate identification code. Contact your local ABB distributor for further information on environmental aspects and recycling instructions for professional recyclers. End of life treatment must follow international and local regulations.

Standards and markings

See *ACS880 liquid-cooled multidrive cabinets and modules electrical planning instructions* (3AXD50000048634 [English]).

Disclaimers

Generic disclaimer

The manufacturer shall have no obligation with respect to any product which (i) has been improperly repaired or altered; (ii) has been subjected to misuse, negligence or accident; (iii) has been used in a manner contrary to the manufacturer's instructions; or (iv) has failed as a result of ordinary wear and tear.

Cybersecurity disclaimer

This product is designed to be connected to and to communicate information and data via a network interface. It is Customer's sole responsibility to provide and continuously ensure a secure connection between the product and Customer network or any other network (as the case may be). Customer shall establish and maintain any appropriate measures (such as but not limited to the installation of firewalls, application of authentication measures, encryption of data, installation of anti-virus programs, etc) to protect the product, the network, its system and the interface against any kind of security breaches, unauthorized access, interference, intrusion, leakage and/or theft of data or information. ABB and its affiliates are not liable for damages and/or losses related to such security breaches, any unauthorized access, interference, intrusion, leakage and/or theft of data or information.

12. Example circuit diagrams

Contents of this chapter

This chapter contains example circuit diagrams of a brake unit.

In an installation with parallel-connected brake chopper modules, one chopper acts as the master for the others. The switching of the follower chopper(s) is controlled by the master via a fiber optic link.

With minor modifications, the basic connections are also valid if there are no factory installed brake resistors. The corresponding resistor connections are to be done by the user.

Note: The actual configuration can differ from this basic configuration. See the drawings included in the delivery.

Brake unit with one brake chopper module

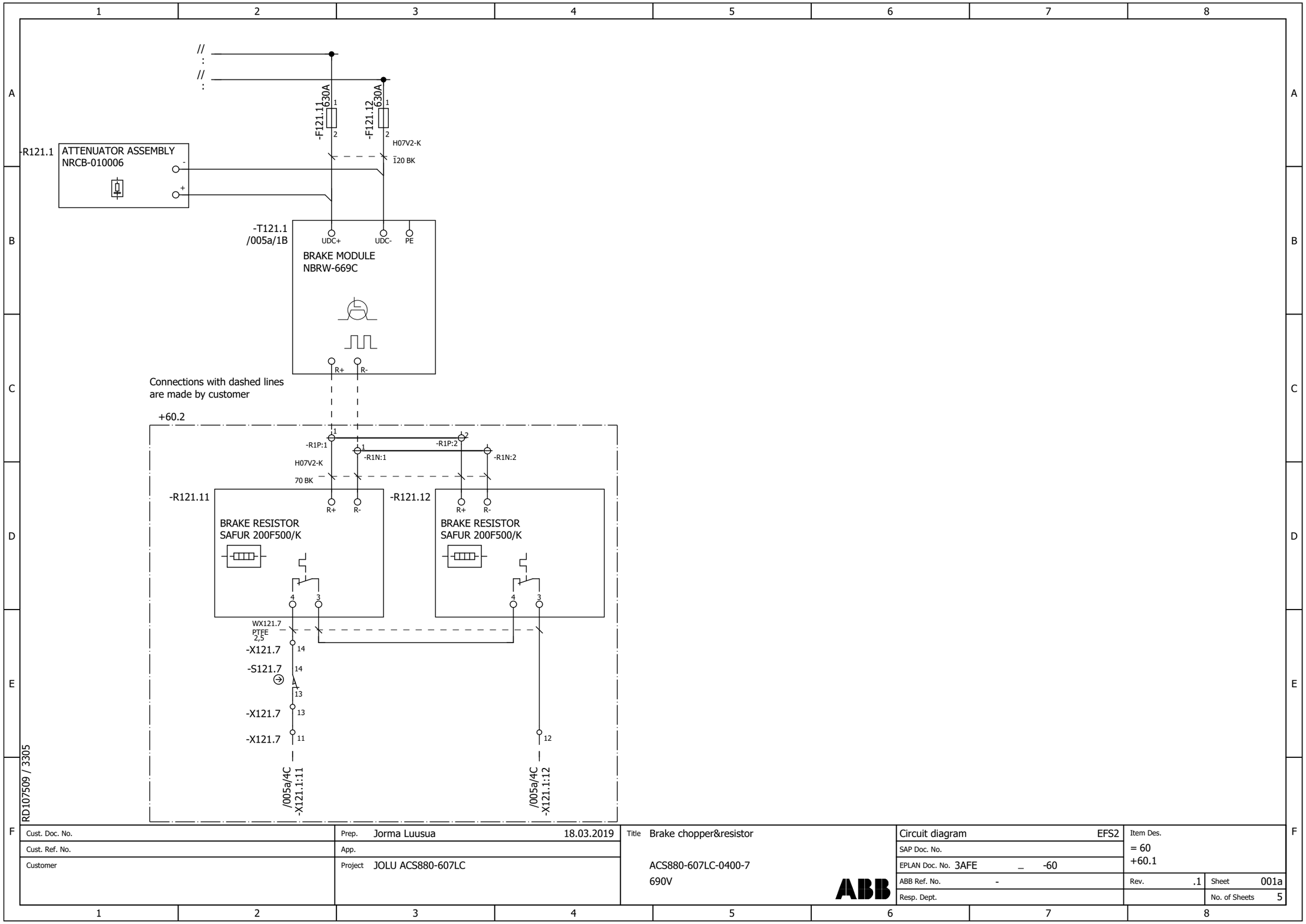

Cust. Doc. No.	Prep. Jorma Luusua 18.03.2019	Title Brake chopper&resistor	Circuit diagram EFS2	Item Des.	
Cust. Ref. No.	App.		SAP Doc. No.	= 60 +60.1	
Customer	Project JOLU ACS880-607LC	ACS880-607LC-0400-7 690V	EPLAN Doc. No. 3AFE _ -60		
		ABB	ABB Ref. No. -	Rev. .1	Sheet 001a
			Resp. Dept.		No. of Sheets 5

Brake chopper control

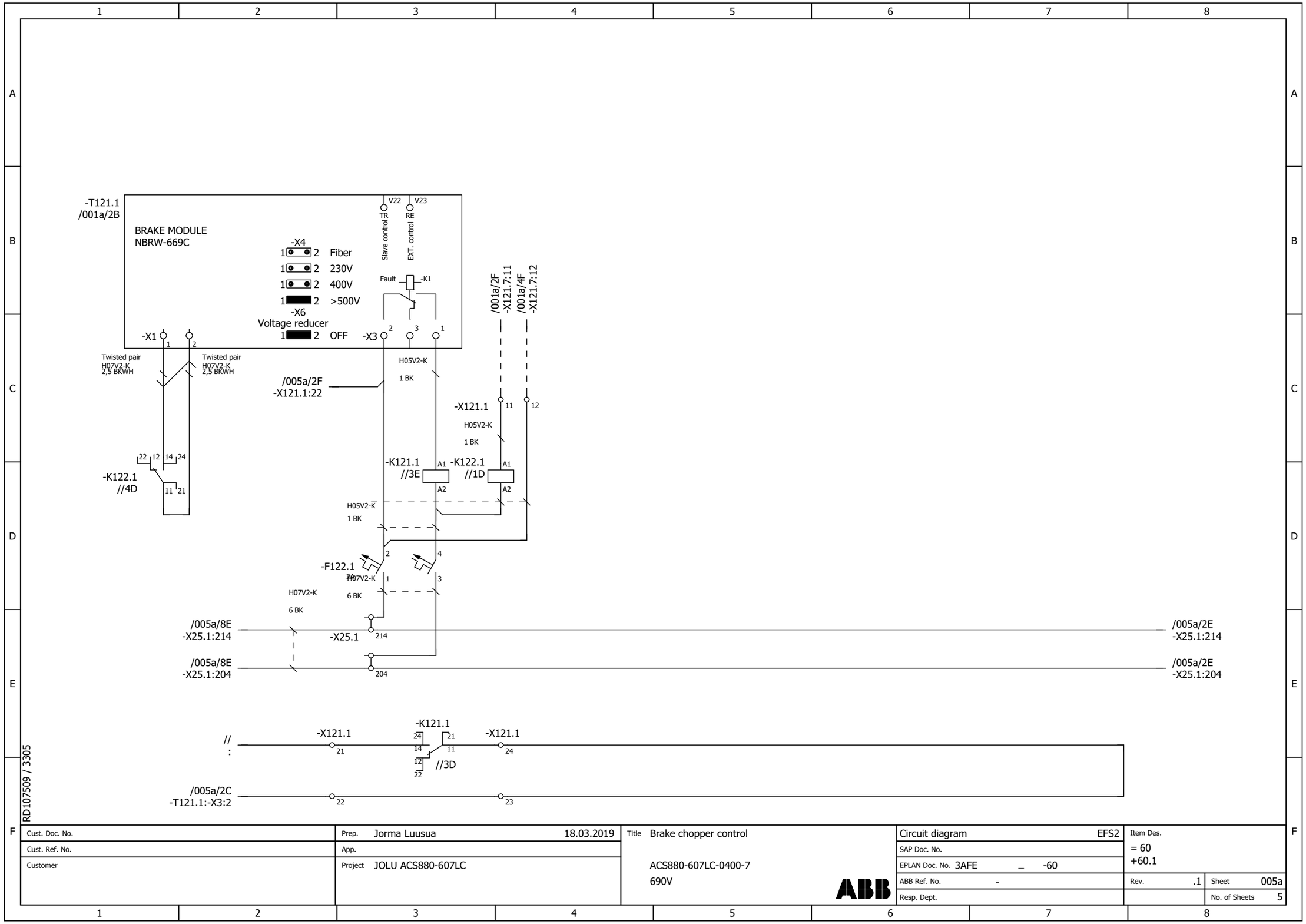

Cust. Doc. No.	Prep. Jorma Luusua 18.03.2019	Title Brake chopper control	Circuit diagram EFS2	Item Des.
Cust. Ref. No.	App.		SAP Doc. No.	= 60
Customer	Project JOLU ACS880-607LC	ACS880-607LC-0400-7	EPLAN Doc. No. 3AFE _ -60	+60.1
		690V	ABB Ref. No. -	Rev. .1 / Sheet 005a
			Resp. Dept.	No. of Sheets 5

External fan voltage supply

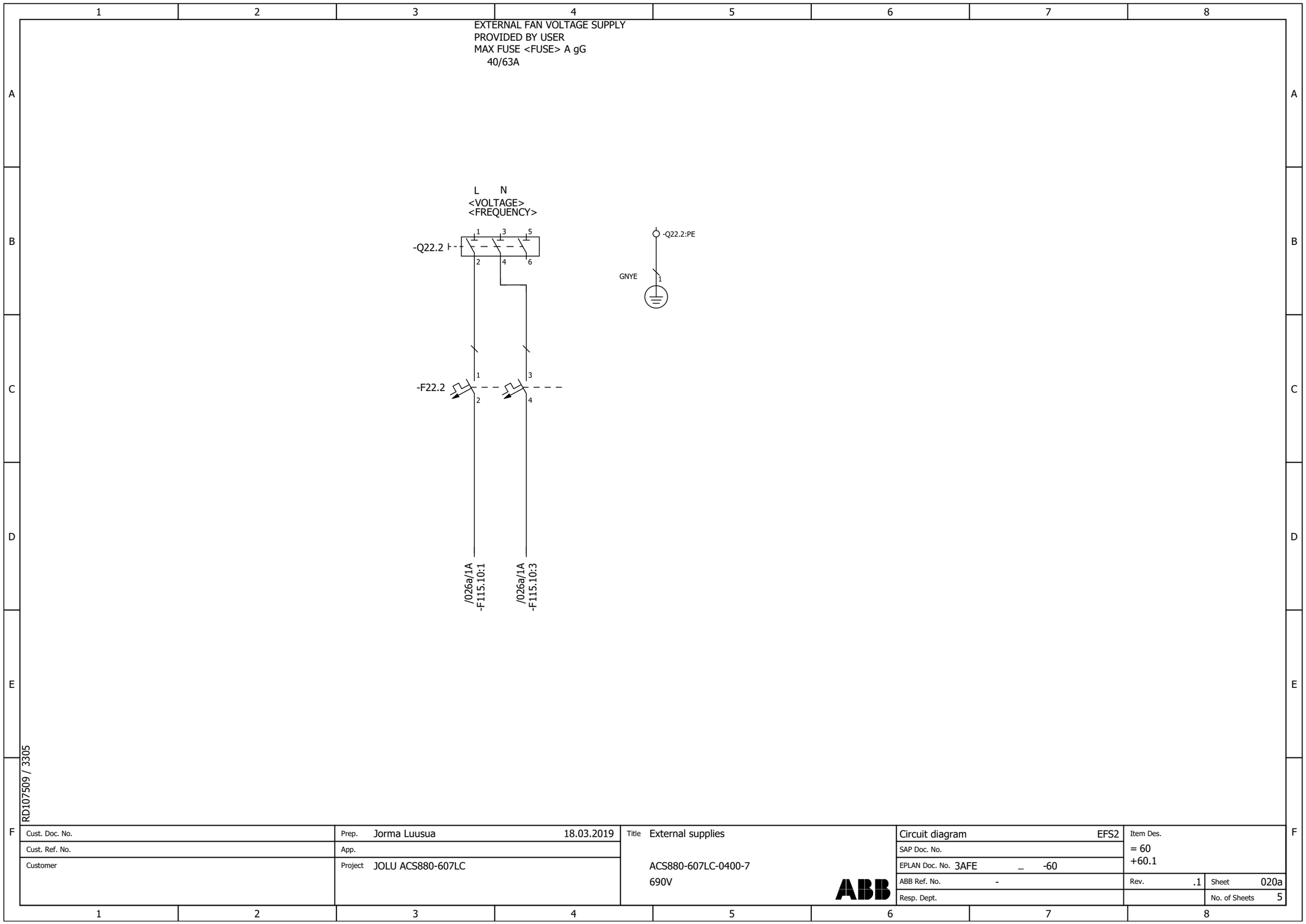

Fan control for brake chopper cubicle

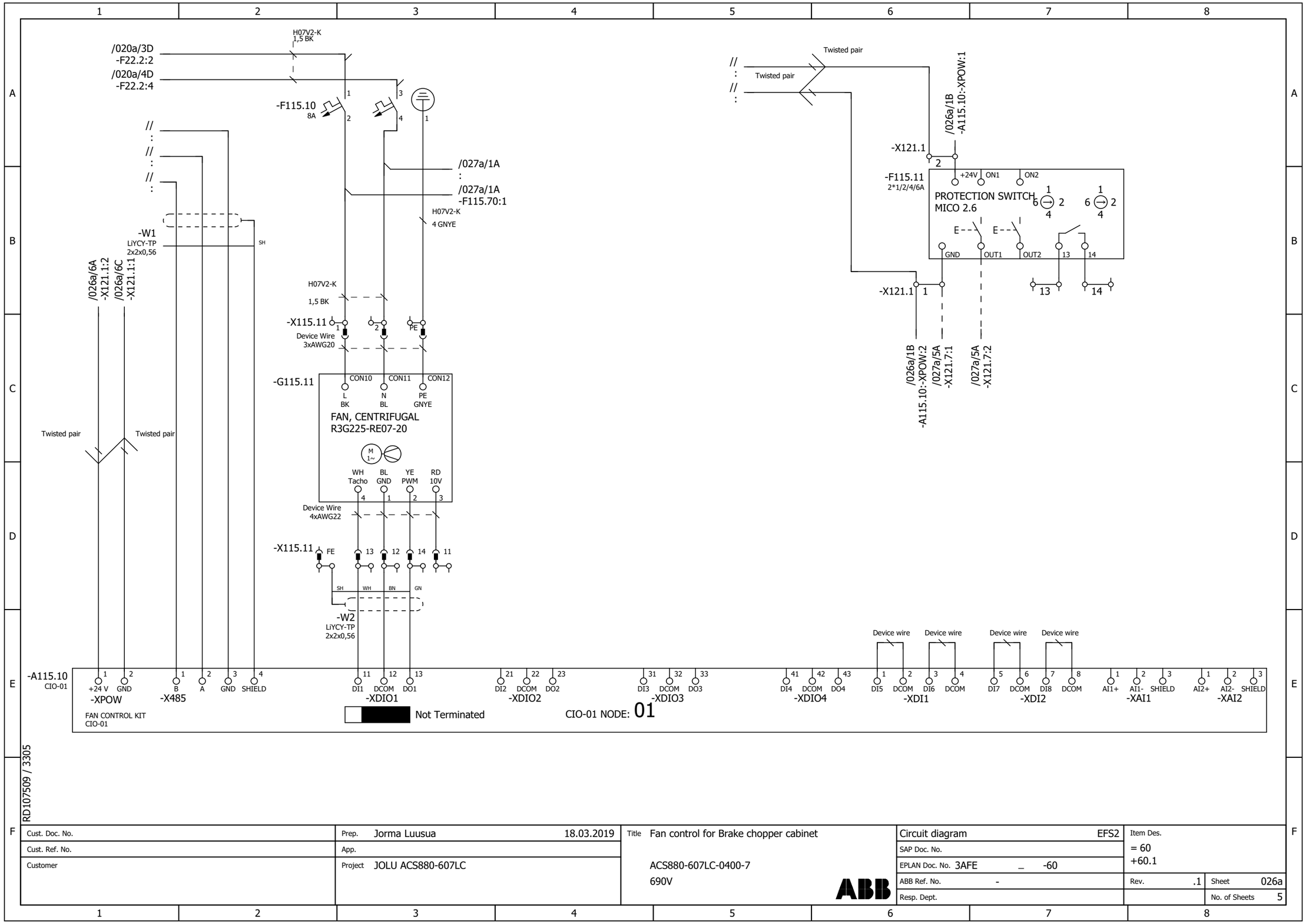

Cust. Doc. No.	Prep. Jorma Luusua 18.03.2019	Title Fan control for Brake chopper cabinet	Circuit diagram EFS2	Item Des.
Cust. Ref. No.	App.		SAP Doc. No.	= 60
Customer	Project JOLU ACS880-607LC	ACS880-607LC-0400-7	EPLAN Doc. No. 3AFE _ -60	+60.1
		690V	ABB Ref. No. -	Rev. .1 / Sheet 026a
			Resp. Dept.	No. of Sheets 5

Fan control for resistor cabinet

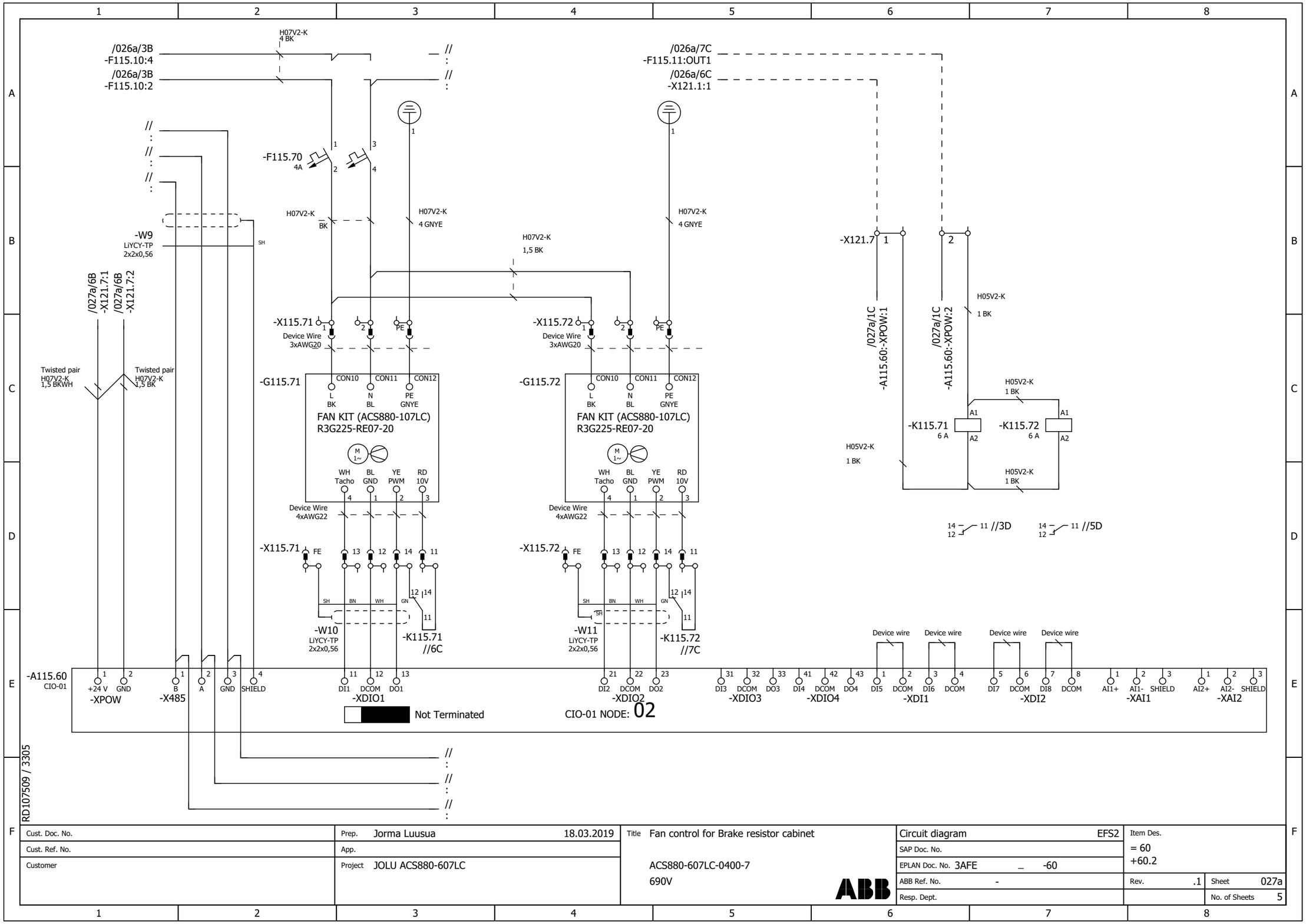

Cust. Doc. No.	Prep. Jorma Luusua 18.03.2019	Title Fan control for Brake resistor cabinet	Circuit diagram EFS2	Item Des.
Cust. Ref. No.	App.		SAP Doc. No.	= 60
Customer	Project JOLU ACS880-607LC	ACS880-607LC-0400-7	EPLAN Doc. No. 3AFE _ -60	+60.2
		690V	ABB Ref. No. -	Rev. .1 Sheet 027a
			Resp. Dept.	No. of Sheets 5

Further information

Product and service inquiries

Address any inquiries about the product to your local ABB representative, quoting the type designation and serial number of the unit in question. A listing of ABB sales, support and service contacts can be found by navigating to www.abb.com/searchchannels.

Product training

For information on ABB product training, navigate to new.abb.com/service/training.

Providing feedback on ABB manuals

Your comments on our manuals are welcome. Navigate to new.abb.com/drives/manuals-feedback-form.

Document library on the Internet

You can find manuals and other product documents in PDF format on the Internet at www.abb.com/drives/documents.

a1 (frozen)
PDF-Web
Created 2019-06-28, 16:36:36

www.abb.com/drives

3AXD50000481491A

© 2019 ABB Oy. All Rights Reserved.
Specifications subject to change without notice.

3AXD50000481491 Rev A (EN) EFFECTIVE 2019-06-28