LENNOX® CORE CONTROL SYSTEM (M4 UNIT CONTROLLER) APPLICATION GUIDE

485115
4/2021

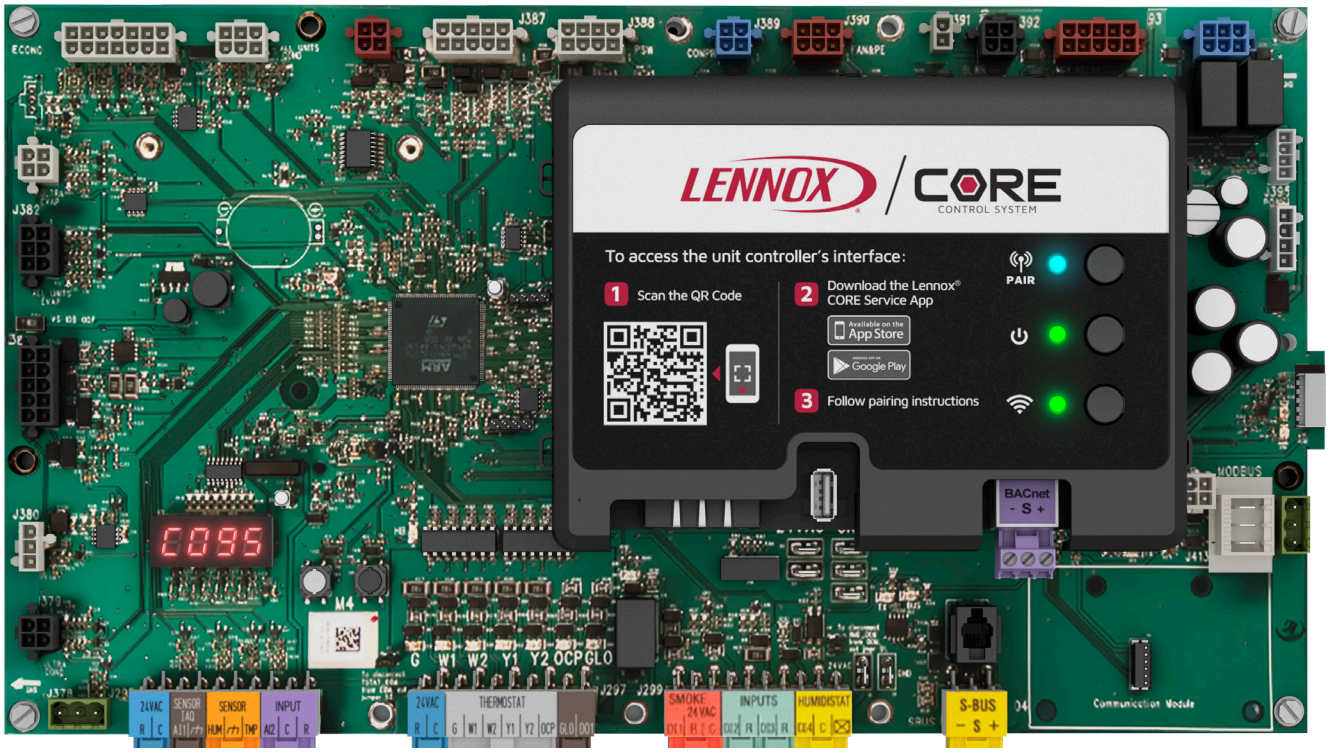

WARNING

Improper installation, adjustment, alteration, service or maintenance can cause property damage, personal injury or loss of life.

Installation and service must be performed by a licensed professional HVAC installer (or equivalent) or service agency

Table of Contents

1. M4 Unit Controller Description 4

1.1. Unit Sizes 4
1.2. Add-on Controllers 4
1.4. Lennox CORE Unit Controller - Connections, Inputs / Outputs, Jumpers, and LEDs Locations... 6
2.1. Wireless Gateway 8
2.2. CORE Service App 8
2.3. Wireless Sensor (21L07) 8
2.4. Wireless Repeater (21L09) 9
2.5. Cloud Firmware Updates 9

3. Network Types 9

4. Main Controller Operations 9

4.1. Control Type - Thermostat 9
4.2. System Mode - Room Sensor Backup Mode Set Points 12

5. Unit Component Operation 14

5.1. Compressor Protection and Delays 14
5.2. Gas Units Burner Protection and Delays 15
5.3. Miscellaneous Components 16
5.4. Gas Heat Operation—Gas Units 18
5.5. Electric Heat Operation 19

6. Sensors 19

6.1. Temperature Sensors - Provided With Unit 19
6.2. Room Sensor - Optional 19
6.3. Relative Humidity Sensor - Optional 19
6.4. Carbon Dioxide (Indoor Air Quality) Sensor - Optional 19
6.5. Supply Static Pressure Sensor - Optional 19
6.6. Enthalpy Sensor - Optional 19
6.7. Economizer Differential Pressure Sensor - Optional 20

7. Outdoor Fan Operations 20

7.1. High Ambient Conditions 20
7.2. Normal Ambient Conditions 20
7.3. Low Ambient Conditions (S11, S84, S85 and S94) 20
7.4. Compressor / Fan Configurations 21
7.5. Low Ambient Outdoor Fan Control and Cycling.. 23

8. Dehumidification Operation 28

8.1. Supermarket Reheat Operation Settings 28
8.2. Humiditrol Dehumidification Operation — (Humiditrol® Reheat) 28
8.3. Third Party Digital Input to Control Dehumidification 29
8.4. Outside Air For Dehumidification 29
8.5. Selecting Minimum Low and Minimum High Damper Positions 29

9. Increased Dehumidification Operation - Model L Ultra-High Efficiency (3- to 6-ton) 38

9.1. Increased Dehumidification in Wired Thermostat Mode 38
9.2. Increased Dehumidification in Room Sensor Mode 38
9.3. How to Enable or Disable Increased Dehumidification Mode 39

10. Power Exhaust Operation 39

10.1. Enabling Feature 39
10.2. Control 39

11. Economizer 40

11.1. General 40
11.2. Enabling Economizer and Settings 40
11.3. Damper Feedback Calibration 40
11.4. Damper Operation During Free Cooling 40
11.5. Free Cooling Compressor Lockout Mode and Low Ambient Set Point 41
11.6. Outdoor Air Suitable for Free Cooling 41
11.7. Enthalpy Set Point 41
11.8. Free Cooling Damper Maximum Position 41
11.9. Minimum Damper Position 41
11.10. Closing Damper and Calibration 41
11.11. Motorized Outdoor Air Damper 41
11.12. Economizer Checkout 41

12. Demand Control Ventilation (DCV) 43

12.1. General 43
12.2. Default Operation 43
12.3. Maximum and Minimum Demand Control Ventilation Damper Settings 43
12.4. Parameter Adjustments 44

13. Outdoor Air Control (OAC) 44

14. Building Pressure Control (BPC) 46

15. Supply Air Delivery 46

15.1. Blower Delays 46
15.2. Supply Constant Air Volume (CAV) Control Mode 46
15.3. Supply Multi-Stage Air Volume (MSAV) Control Mode 46
15.4. Supply Variable Air Volume (VAV) Control Mode 47
15.5. Variable Frequency Drive (VFD) Control 47
15.6. Supply Constant Air Volume (CAV) with Zone Bypass Damper Control 47
15.7. Ultra-High Efficiency 3- to 6-ton Units 49

16. Discharge Air Control 49

16.1. Cooling 49
16.2. Heating 51
16.3. Air Delivery Operation 53
16.4. Occupied /Unoccupied Operation 53
16.5. Cooling Operation 53
16.6. Heating Operation 53

16.7. Power Exhaust Operation 54
16.8. Supply Bypass Damper Control 54
17. Load Shedding Options 54
18. Service Relay 54
18.1. Service Relay Operation 54
18.2. System Relative Humidity Options..... 54
18.3. System Indoor Air Quality / Carbon Dioxide Options..... 55
18.4. System Outdoor Air Temperature Operation..... 55
19. Advanced Airflow System (Smart Airflow™) - Model L High and Ultra Efficiency 3 to 5-ton Units 55
19.1. Calibration 55
19.2. Supply Airflow Measurement and Control 56
19.3. Outdoor Airflow (OA) Measurement and Control 56
20. Sequence of Operation 57
20.1. Unit Controller Control Modes 57
20.2. CAV Units in Single-Zone Applications with a Lennox Room Sensor 59
20.3. CAV Units in Single-Zone Applications — Wired Thermostat or Third-Party Unit Controller..... 60
21. Modulating Gas Valve 63
22. Events and Alarms 64
22.1. Phase - Voltage Detection 64
22.2. Service Relays..... 64
22.3. Service Relay Operation 64
22.4. System Relative Humidity Options..... 65
22.5. System Indoor Air Quality / Carbon Dioxide Options..... 65
22.6. System Outdoor Air Temperature Operation..... 65
23. Unit Operation 65
24. CORE Service App Menu Selection Overview... 65
25. Pairing CORE Service App to CORE Unit Controller 66
26. System Overview - Room Sensor Mode..... 66
27. Active Alarms..... 66
28. CORE Service App General Menu + User Preference..... 67
29. CORE Service App RTU Menu..... 67
29.1. Setup..... 67
29.2. Data 77
29.3. Service..... 81
29.4. Settings..... 85
30. Abbreviations 87
31. Alarms 89
31.1. Phase - Voltage Detection 89
31.2. Service Relays..... 89
32. CORE Control System Unit Parameters..... 101
33. CORE Control System Inputs and Outputs 127
33.1. CORE Unit Controller (A55) Input/Outputs 127
33.2. C4 Control (A178)..... 135
33.3. DSI Board (A3)..... 137
33.4. W4 Control..... 140
34. Wiring Diagram..... 141

1. M4 Unit Controller Description

The Lennox® CORE Unit Controller which will be referred to as the M4 unit controller throughout this document provides all rooftop unit control functions to insure its safe and reliable operation. It also provides status and diagnostic information to facilitate troubleshooting. The controller's programmable parameters allow adjustment of time delays and set points that enable advanced features.

The default configuration requires a standard room thermostat or direct digital controller. By changing a single parameter, the M4 unit controller can also control the unit from a room sensor. The M4 unit controller can also be configured as a network controller when daisy-chained to the L Connection® Network. To simplify configuration, the M4 unit controller may be connected to a computer (Microsoft® Windows-based) which has the M4 unit controller software installed.

1.1. Unit Sizes

Table 1. Unit Sizes

Model Sizes	Tonnage	Model Sizes	Tonnage
036	3-ton	156	13-ton
048	4-ton	180	15-ton
060	5-ton	210	17.5-ton
074	6-ton	240	20-ton
094	7.5-ton	300	25-ton
102	8.5-ton		
150	12.5-ton		

1.2. Add-on Controllers

Add-on controllers connect to the M4 unit controller to build variations according to application or equipment type.

Table 2. Add On Controller

Package Unit Models	Box Size	M4 Unit Controller (A55)	C4 Control (A178) #3 and 4 Compressor Control and 2nd Heat Circuit
LCM/LGM 036-074U	A	X	X
LCM/LGM 092-150U	B	X	X
LCM/LGM 150H / S	B	X	
LCM/LGM 156-300 U	C	X	X

[2] Requires A55 part number 104661-xx)

NOTE: *"Figure 1. Original M4 Unit Controller (A55) and Expansion Port Locations" on page 5 shows the M4 unit controller components and the location of the add-on control expansion ports.*

1.3. M4 Unit Controller Layout and Connections

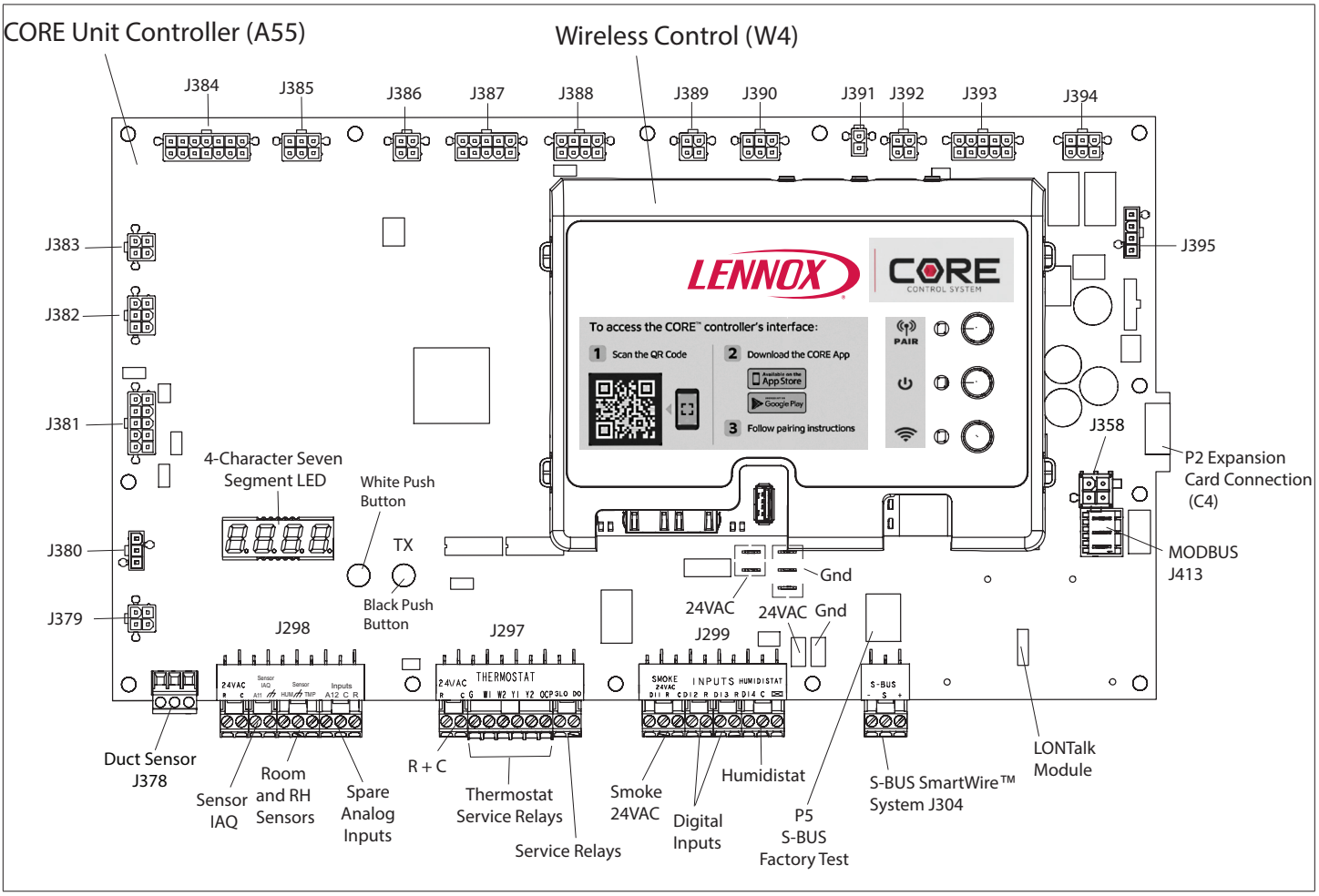

Figure 1. Original M4 Unit Controller (A55) and Expansion Port Locations

1.3.1. CORE Unit Controller Overview

For all available CORE Control System documentation, go to the Lennox Commercial website.

www.lennoxcommercial.com

The Lennox Core Unit Controller is a multi-processor based controller. Standard with all Model L™ rooftop units, integrates key technologies that lower installation costs, drive system efficiency, and protect your investments. The CORE Unit Controller is a microprocessor-based controller that provides flexible control of all unit functions.

Lennox® CORE Service App Connectivity

- Setup menu insures proper installation and simplified setup of the rooftop unit
- Detailed data readout updates sensor values in real time and allows trending
- Unit self-test verifies individual critical component and system performance
- Economizer test function ensures economizer is operating correctly

1.3.2. Lennox® CORE Service App - Android or iOS Device Minimum System Requirements

- Android hardware requires 2GB RAM and 2GHz Core processor. Tablets are supported.
- Minimum Android 6.0 (Marshmallow) or higher. Recommend Android 10 and Apple products require IOS version 11 or higher.

1.3.3. Additional Features

- Built-In 7-segment display (four character positions) the unit status and active alarms for easy troubleshooting
- Buttons for test and clearing delays
- SmartWire™ System with keyed and removable screw terminals ensure correct field wiring
- Built-in BACnet IP and MS/TP allow open integration to building management systems
- Two-port Ethernet Switch enables daisy chaining for BACnet IP and automatic firmware updates

NOTE: *Unit Internet Connection required for firmware update only and not for BACnet IP.*

- Profile setup copies key settings between units with

the same configuration to reduce setup time

- USB port allows a technician to download and transfer unit information to help verify service was performed
- USB software updates on the CORE™ Unit Controller enhance functionality without the need to change components

1.3.4. Configurable Sequences of Operation

- Single-Zone VAV (Discharge Control) Cooling (With room sensor or 24V DDC)
- Three Cooling Stages (With compatible thermostat or DDC / additional relay)
- Four Heating Stages using a room sensor (up to two with thermostat / DDC Controls)
- Four stages in VAV/Discharge Air Control with thermostat input to W1
- Multi-Zone VAV (Discharge Control) Heating and Cooling
- Economizer Control Options (See Economizer / Exhaust Air / Outdoor Air sections)
- Exhaust Fan Control Modes for fresh air damper position
- Configurable morning warm-up and morning cool-down
- Night Setback Mode
- Fresh Air Tempering for improved space temperature control during ventilation
- Demand Control Ventilation
- Low Ambient Controls for operation down to 0°F
- Humiditrol®+ Operation (Variable Capacity Hot-Gas Reheat)
- Enhanced Dehumidification (Latent Demand Control without reheat)

1.3.5. Component Protection / Unit Safeguards

- Compressor Time-Off Delay
- Adjustable Blower On/Off Delay
- Return Air Temperature Limit Control
- Safety Switch Input allows Controller to respond to a external safety switch trip
- Service Relay Output
- Thermostat Bounce Delay
- Smoke Alarm Mode has four choices (unit off, positive pressure, negative pressure, purge)
- “Strike Three” Protection
- Gas Valve Time Delay Between First and Second Stage
- Minimum Compressor Run Time

1.3.6. Control Methods / Interfaces

- DDC and 24V Thermostat
- BACnet (MS/TP) and IP
- LONTalk (Factory & Field Option)
- Lennox S-BUS
- Compatibility with Lennox Wireless Zone Sensors
- Zone Temperature Sensor input
- Dehumidistat and Humidity Sensor inputs
- Indoor Air Quality Inputs (2)
- One IAQ input is report only.
- Built-in Control Parameter Defaults
- Permanent Diagnostic Code Storage
- Field Adjustable Control Parameters (Over 200 settings)
- Dirty Filter Switch Input

1.4. Lennox CORE Unit Controller - Connections, Inputs / Outputs, Jumpers, and LEDs Locations

1.4.1. Thermostat Common Isolation - TSTAT_COM Jumper

Thermostat (TSTAT) sensor commons are located on connector P298 and may be isolated if they are powered remotely. Remove jumper.

This jumper is located to the left of P297 connector. This jumper would be removed only in unique situations where the device supplying the thermostat signals to the CORE Unit Controller has its own power source and does not share a common reference voltage with the CORE unit controller. Otherwise the jumper would remain installed across both pins, as shipped from the factory.

1.4.2. Humidistat Common Isolation - HMD_COM Jumper

The humidity (HUM) sensor commons are located on connector P298 and may be isolated if they are powered remotely. Remove jumper. This jumper is located to the right of P299 connector. This jumper would be removed only in unique situations where the device supplying the thermostat/ humidistat signals to the CORE Unit Controller has its own power source and does not share a common reference voltage with the CORE Unit Controller. Otherwise the jumper would remain installed across both pins, as shipped from the factory.

1.4.3. W4 Control - USB Flash Drive Interface Usage

The W4 Control uses a USB type A interface. This USB port is used for verifying service, downloading reports, transferring unit profiles and performing firmware updates.

On-site data collection requires use of either a USB flash drive or download and shared from the CORE Service App. Data written to the drive include date, time, serial number,

catalog number, basic data, error code buffer, and unit configuration.

1.4.4. S-BUS (Smartwire™) (J304)

This is the L-connection interface which is a R-485 network connection with other devices (NCP, comfort sensors, other RTU, etc.).

1.4.5. MODBUS Connection (J413)

This is a TIA-485 serial line over MODBUS (messaging structure) communication. This connection is used for multiple components.

1.4.6. CORE Unit Controller LED Indicators

Table 3. LED Operation Indicators

LED	Status	Indication	Meaning
Heartbeat (HB) (D33)	Green	Slow Flash	Normal Operation
	Green	Fast Flash	Boot loader / firmware update mode
	No light	Steady Off	No voltage to M3 board or defective board
	Green	Steady On	Unit in configuration / test mode (not in normal mode)
S-BUS / PC Connection (D70 and D71)	BUS (green)	Flickering ON	Network traffic present
	TX (yellow)	Flickering ON	Unit controller is transmitting
Thermostat Input	Yellow	Indicates a thermostat demand	G - Blower on
			W1 - First-Stage Heating
			W2 - Second -Stage Heating
			Y1 - First-Stage Cooling
			Y2 - Second-Stage Cooling
			OCP - Occupied
			GLO - Global input
MODBUS	Two LEDs that indicate transmit (TX) and receive (RX) activity.		
Slow Flash = 1 second on; 1 second off. Fast Flash = ½ second on; ½ second off. A “flickering” LED flashes significantly faster than a “fast flash“.			
NOTE: *LEDs are energized by 24VAC thermostat inputs.*			

1.4.7. Local Interface - Push Buttons and Heart Beat

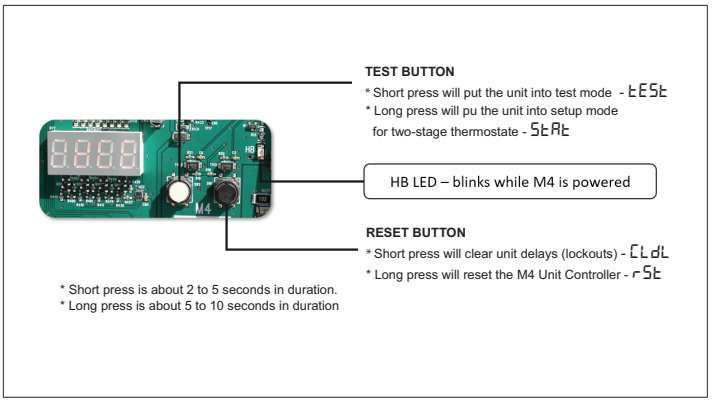

Figure 2. Push Buttons and Heart Beat

1.4.8. Local Interface - Four Character Seven-Segment LED - Status Codes

Table 4. Status Codes

Status Code	Definition
PnSt	Pre-Install
A173	Smoke
Lout	Controller Lockout
Eror	Off On Alarm
d300	Delay up to 5 minutes
d020	Delay up to 20 seconds
dhUm	Dehumidification
ShEd	Compressor Load Shedding
Prht	Morning Warmup
Strt	Start up
FAH	Fresh Air Heating
H050	Heating (50%)
PrCL	Pre-Cool
CEoP	Cool + Max Open Economizer
CE10	Cool + Modulate Economizer (10%)
FrCL	Free Cooling
FAC	Fresh Air Cooling
C078	Cooling (78%)
b71S	Blower On - (71.5%) OAS
b23	Blower On (23%)
ioAS	No Demand - OAS
idLE	No Demand

2. W4 Wireless Controller - Connections, Buttons and LEDs

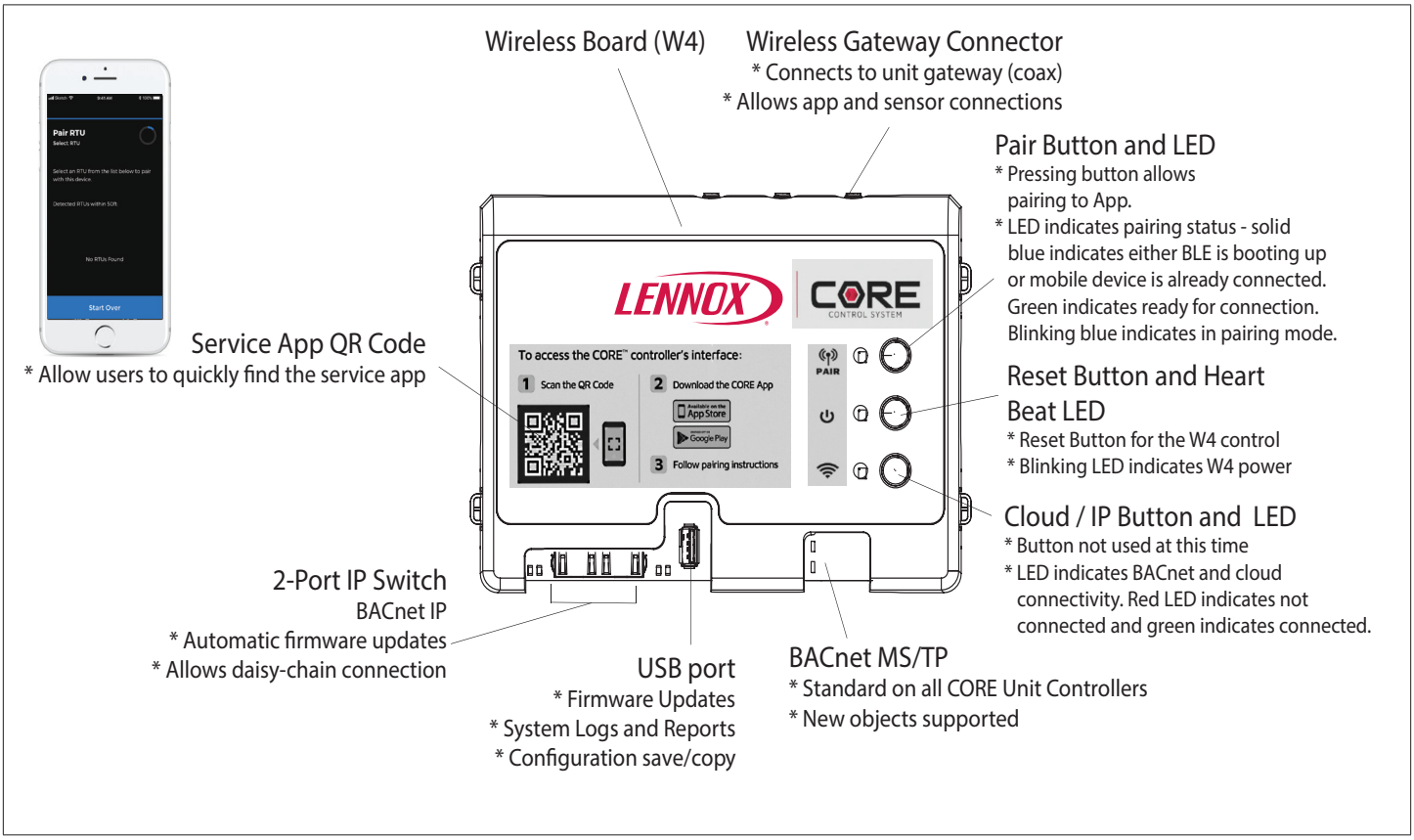

Figure 3. W4 Controller Interfaces

2.1. Wireless Gateway

Provides the following:

- Plenum-rated BLE antenna
- Factory installed placement allows for use in vertical and horizontal applications
- Support for wireless room sensors
- Coax cable connects gateway to W4 control
- Return air duct mount enables a boosted signal from CORE Unit Controller to CORE Service App mobile device

2.2. CORE Service App

- Reduces installation setup and service times
- Simple test
- Connects to the CORE Unit Controller via the wireless gateway
- Pairs with a simple button press (requires physical access)
- Used for install, service, and maintenance of Model L

2.3. Wireless Sensor (21L07)

Sensor and repeaters provide:

- Reduce installation costs
- Simple averaging and setup
- Wireless connection to CORE Unit Controller via wireless gateway
- Easy install
- Optional repeater boosts signal
- Easy to move with building construction
- Up to five sensor per RTU
- Up to five repeaters per RTU
- Sensors will automatically average
- Reliable BLE Mesh
- TMP / RH / After hours override
- 24VAC or 4AA battery
- Two year plus battery life
- Either wireless or S-BUS compatibility
- Locking hex screw

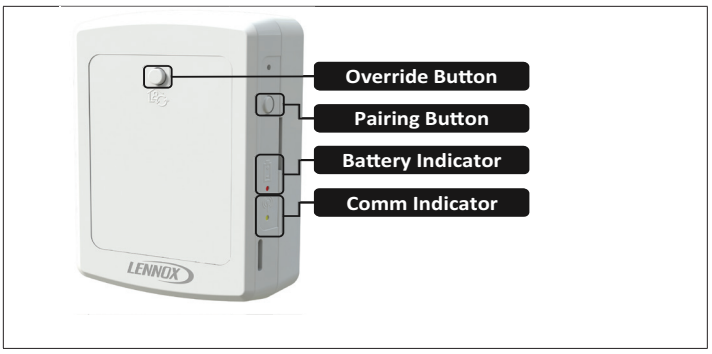

Figure 4. Wireless Sensor (21L07)

2.4. Wireless Repeater (21L09)

- Used to “extend” signal to wireless sensors
- Increases effective range
- Up to five repeaters per RTU
- Powered by 24VAC
- Used in wireless sensor setup applications only
- Locking hex screw

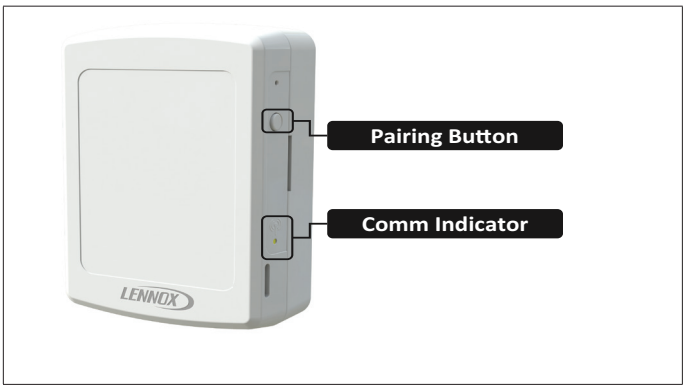

Figure 5. Wireless Repeater (21L09)

2.5. Cloud Firmware Updates

- Internet connection is required
- Can be set to on-demand or automatic
- Updates only available when M4 Unit Controller is connected to cloud via IP (Ethernet)
- Firmware can be check on-demand or set nightly. Either method can be configured using the CORE Service Application. Default setting is set to on demand
- Updates are also available via USB interface on the M4 Unit Controller

3. Network Types

The following are the types of communication network types supported.

Table 5. Network Types

Screen Label	Network Type
LON	LonTalk
BACNET	BACnet MS/TP and IP
LCONN	L-Connection

Table 5. Network Types

Screen Label	Network Type
RTU	Rooftop Unit stand-alone mode status indicator

4. Main Controller Operations

4.1. Control Type - Thermostat

The M4 unit controller will operate the system from a wired thermostat, room sensor, zoning system using L Connection Zoning System based on the System Mode selected in:

Go to SETTINGS > CONTROL > CONTROL TYPE = WIRED THERMOSTAT

The default control type is wired thermostat.

Direct Digital Control (DDC) applications use thermostat mode for two- or three-stage cooling and two-stage heating. Units are shipped from the factory configured for control type using a wired thermostat. The M4 unit controller will operate two-stages of heating and cooling based on the thermostat Y1, Y2, W1, W2, G, and OCP (occupied) demands.

4.1.1. Cooling Stages

The M4 unit controller allows five different staging options:

Go to SETTINGS > RTU OPTION > EDIT PARAMETER =111 (COOL STAGING OPTION)

- **Option 0**. **No cooling operation**.
- **Option 1**. ***Two Cooling Stages***: Y2 demand brings on all mechanical stages of cooling during economizer operation.
- **Option 2**. (Default) ***Two Cooling Stages***: Cooling operation is shown in “Table 5. Network Types” on page 9. Y2 demand brings 1/2 or 2/3 mechanical stages of cooling during economizer operation.
- **Option 3**. ***Three Cooling Stages***: Cooling operation is shown in “Table 7. Thermostat Mode Operation (Three Cooling Stages Parameter 111)” on page 10; this option requires the use of a three-stage cool thermostat and a K27 relay. See wiring pictorial in “Figure 6. Third-Stage Cool (Parameter 111) Wiring” on page 9 and C section control wiring diagram.
- **Option 4**. ***Discharge Air Control Up to Four Stages***: Discharge Air Control Cooling (DACC) option automatically cycles up to four stages of cooling to maintain a discharge air temperature within specific tolerances of discharge air control cooling set point (occupied or unoccupied). See Parameters 180 and 181.

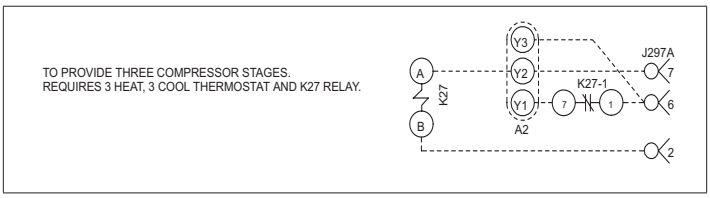

Figure 6. Third-Stage Cool (Parameter 111) Wiring

Table 6. Thermostat Mode Operation Default (Two Cooling Stages Parameter 111)

Number of Compressors	No Economizer		With Economizer*	
	Y1 Demand	Y2 Demand Adds	Y1 Demand	Y2 Demand Adds
1	CP1	NO CHANGE	Free Cool	CP1
2 (or two stage compressor)	CP1	CP2	Free Cool	CP1(1)
3	CP1 + CP2	CP3	Free Cool	CP1 + CP2(1)
4	CP1 + CP2	CP3 + CP4	Free Cool	CP1 + CP2(1)
CP1 = Compressor 1, CP2 = Compressor 2, CP3 = Compressor 3, CP4 = Compressor 4. (1) - Parameter 111, option 1 will bring on all available mechanical cooling. *Assumes outdoor air is suitable for cooling.				

Table 7. Thermostat Mode Operation (Three Cooling Stages Parameter 111)

Number of Compressors	No Economizer			With Economizer*		
	Y1 Demand	Y2 Demand Adds	Y3 Demand Adds	Y1 Demand	Y2 Demand Adds	Y3 Demand Adds
1	CP1	NO CHANGE	NO CHANGE	Free Cool	CP1	CP1
2 (or two stage compressor)	CP1	CP2	NO CHANGE	Free Cool	CP1	CP2
3	CP1	CP2	CP3	Free Cool	CP1	CP2
4	CP1 + CP2	CP3	CP4	Free Cool	CP1 + CP2	CP3
CP1 = Compressor 1, CP2 = Compressor 2, CP3 = Compressor 3, CP4 = Compressor 4. *Assumes outdoor air is suitable for cooling.						

Table 8. LC/LG 036U, 048U, 060U and 074U — (Thermostat Mode Operation Default Two Cooling Stages Parameter 111)

Number of Compressors	No Economizer		With Economizer*	
	Y1 Demand	Y2 Demand Adds	Y1 Demand	Y2 Demand Adds
1	CP1 @ 60%	CP1 @ 100%	Free Cool	CP1 @ 60%
CP1 is a Variable Speed Compressor. *Assumes outdoor air is suitable for cooling.				

Table 9. LC/LG 036U, 048U, 060U and 074U — Thermostat Mode Operation Default (Three Cooling Stages Parameter 111)

Number of Compressors	No Economizer			With Economizer*		
	Y1 Demand	Y2 Demand Adds	Y3 Demand Adds	Y1 Demand	Y2 Demand Adds	Y3 Demand Adds
1	CP1 @ 60%	CP1 @ 100%	CP1 @ 100%	Free Cool	CP1 @ 60%	CP1 @ 100%
CP1 is a Variable Speed Compressor. *Assumes outdoor air is suitable for cooling.						

4.1.2. Heating Stages

The M4 unit controller default thermostat operation is for two heating stages.

See "Table 10. Default Thermostat Mode Operation (Gas Heat) (Model L 3- to 30-ton)" for gas heat units and "Table 11. Default Thermostat Mode Operation (Electric Heat) (Model L LC)" for electric heat units.

The M4 unit controller allows three different staging.

Go to RTU MENU > SETTINGS > RTU OPTION > EDIT PARAMETER =112 (HEAT STAGING OPTION)

Available sections are:

- **Option 0**. No heating operation
- **Option 1**. Discharge Air Control with up to four stages. Discharge Air Control Heating (DACH) option automatically cycles up to four stages of heating to maintain a discharge air temperature within specific tolerances of discharge air control heating set point (occupied or unoccupied). See Parameters 174 and 175.
- **Option 2**. Thermostat operation (default)
  - > Model L 3 to 12-1/2 ton units use up to two stages in room sensor control mode.
  - > Specially equipped 4 to 6 ton LG units can support four stage gas heat by utilizing an electromechanical control, external to CORE Control System.
  - > LG 13- to 25-ton units with two gas valves with each having two-stages. Model L LG can support up to four stage operation in Room Sensor mode. See "Table 12. Room Sensor Mode Operation (Gas Heat) (Model L LG 13 to 30 ton)".

Table 10. Default Thermostat Mode Operation (Gas Heat) (Model L 3- to 30-ton)

No. of Heat Sections	Gas Valve	W1 Demand	W2 Demand
1	(1) 1 Stage	Gas Valve 1	Gas Valve 1
1	(1) 2 Stage**	Low Rate	High Rate
2	(2) 1 Stage	High Rate - Both Valves	High Rate - Both Valves
2	(2) 2 Stage	Low Rate - Both Valves	High Rate - Both Valves
** Four and six ton LG units equipped with four stage gas heat employ two stage control from M4 as above.			

Table 11. Default Thermostat Mode Operation (Electric Heat) (Model L LC)

No. of Heat Sections	Stages Per Section	W1 Demand	W2 Demand
1	1	Stage 1	Stage 1
1	2	Stage 1	Stage 2
2	1	High Rate - Both Sections	High Rate - Both Sections
2	2	Low Rate - Both Sections	High Rate - Both Sections

Table 12. Room Sensor Mode Operation (Gas Heat) (Model L LG 13 to 30 ton)

Stage	Gas Valve Operation
1	Gas Valve 1 Low Fire
2	Both Gas Valves on Low Fire
3	Gas Valve 1 High Fire and Gas Valve 2 Low Fire
4	Both Gas Valves on High Fire

4.2. System Mode - Room Sensor Backup Mode Set Points

The Room Sensor Backup Mode Set Points allows the M4 unit controller to use internal set points and input from a room sensor to operate the unit. An additional thermostat or energy management system is not required.

4.2.1. Network Control Panel

The set points can also be adjusted using the optional network control panel (NPC). When a NCP is installed, the set points are determined by its schedule. The NPC communicates with the M4 unit controller via the L Connection network bus. Internal M4 unit controller set points are used only if network communication is interrupted.

The room sensor is wired directly to each unit P298-6 and P298-7 (marked GND and TMP on the Field Wiring Termination Plugs). The room sensor wiring diagram key number is A2.

Go to RTU MENU > SETUP > INSTALL > CONFIGURATION ID 1

NOTE: *To select either BACnet or LonTalk, Configuration ID 1, position 5 needs to be set to either B for BACnet or L for LonTalk.*

Internal set points can be adjusted using the user interface on the M4 unit controller. In room sensor mode, during the occupied or unoccupied time period, the default M4 unit controller internal heating and cooling (occupied and unoccupied) set points as reference in “4.2.3. Room Sensor Back-Up Mode Set Points”.

Use parameter “stage differential” and “dead-band” options to adjust set points in room sensor mode.

4.2.2. Room Sensor Back-up Modes

Use the setup wizard to configure a back-up mode option.

Go to RTU MENU > SETUP > NETWORK INTEGRATION > NETWORK WIZARD

NOTE: *Select the appropriate menu option to determine the room sensor back-up mode. The back-up mode is used in the event that the A2 room sensor fails or is disconnected. The following options are available:*

- **NONE** has no back-up mode of control should the A2 room sensor fail.
- **ROOM SENSOR** option is only available if the control mode is set to NETWORK.
- **RETURN AIR BACKUP** will default to return air sensor RT16 (should the A2 room sensor fail). The M4 unit controller will switch over and operate based on the temperature from the return air sensor. RT16 is standard on all units; therefore M4 unit controller Room Sensor System Mode 3 is the recommended backup mode when units are setup in the room sensor mode.
- **THERMOSTAT** will default to a local thermostat if one is installed (should the A2 room sensor fail). The M4 unit controller will switch over and operate based on the signals from the room thermostat.

NOTE: *The RT16 sensor has a lower resolution than the A2 room sensor and should only be used as back-up.*

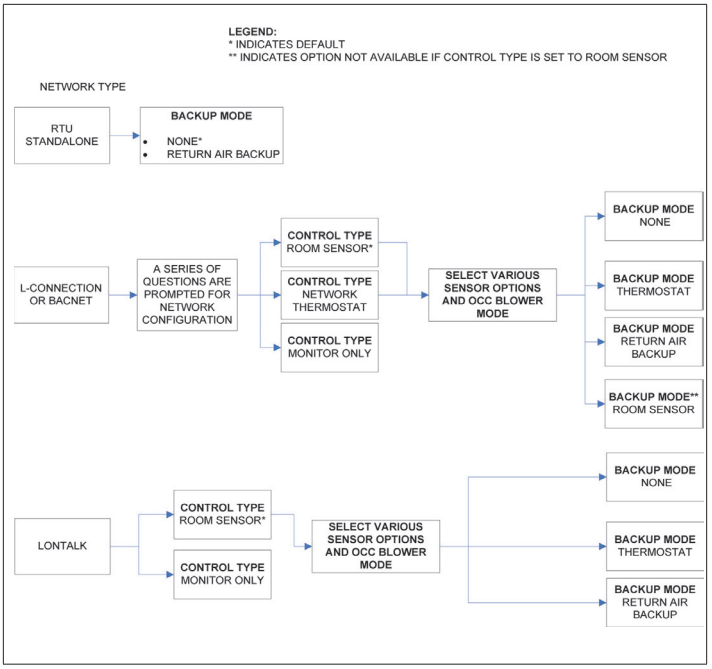

Figure 7. Backup Mode

4.2.3. Room Sensor Back-Up Mode Set Points

The following set points are available when primary mode is set to NETWORK THERMOSTAT and the backup sensor mode is set to either RETURN AIR BACK or ROOM SENSOR. All available set points have a range of 40.0°F to 95.0°F.

The listed values below are defaults.

- Occupied Heating set point: 70.0°F
- Unoccupied Heating set point: 60.0°F
- Occupied Cooling set point: 75.0°F
- Unoccupied Cooling set point: 85.0°F

Use Parameters 142 and 147 for stage differential and dead-band options to adjust set points in room sensor mode.

4.2.4. L Connection Network Back-Up Mode Requirements

Use the setup wizard to configure a back-up mode option. The following references the wizard path to the backup mode setting.

Go to RTU MENU > SETUP > NETWORK INTEGRATION > NETWORK WIZARD

Back-up mode option is used when the communication link has been lost on the L Connection® system bus. Five minutes after communication is interrupted, the M4 unit controller will start using the configured back-up mode and applicable set points. The M4 unit controller will default to back-up set points for occupied heat or cool modes.

During normal room sensor operation with a network control panel, the occupied demands are sent over the network and the occupied input on P297-8 is ignored. The occupied input on P297-8 is only read if the network communication link is lost and the backup mode is set to local thermostat.

Room sensor mode will have a default of **occupied**. If, communication is lost the system will remain in the last

state it received until communication is restored, or power is cycled.

After the delays the units will go to a **occupied back-up** mode regardless of any input at P297-8 which, will be ignored.

4.2.5. Heating and Cooling Stages in Room Sensor Mode

In Room Sensor Mode default operation, the M4 unit controller controls up to four stages of heating and cooling. See “Figure 8. Room Sensor Stages for Gas / Electric Units (default values shown)” on page 13 and “Table 59. CORE Control System Unit Parameters” on page 101.

The number of stages utilized depends on the type of equipment and whether or not an economizer is used. On units with economizers, free cooling becomes stage 1 and all compressor stages shift up one stage. On units with four (4) compressors and an economizer, compressors 3 and 4 are controlled together for stage 4.

4.2.5.1. Model L LC/LG -036 through -074U (Ultra-High Efficiency Units)

The reference models feature a fully variable compressor, indoor blower and outdoor fan. For cooling, the M4 unit controller actively monitors space temperature from the room sensor and discharge air temperature.

Based on this information, the M4 unit controller modulates the indoor blower to meet the space temperature set point and modulates the compressor to meet the discharge air temperature set point.

The outdoor fan is controlled based on compressor speed. In this way, the unit controller uses only the capacity needed to meet the space temperature and discharge air temperature set points which improves unit efficiency, reliability, and comfort.

Due to the variability of the compressor and indoor blower, there are infinitely many stages of cooling depending on the set points and load in the space, which differs from traditional commercial rooftop HVAC units that have fixed stages of cooling. The unit controller will cease unit operation in cooling mode once the cooling demand in the space has been satisfied.

If the outdoor air is suitable and the unit features an economizer, instead of using mechanical cooling to meet a low cooling demand, the M4 unit controller will try to meet the demand by opening the economizer and using outdoor air. The economizer damper will modulate to maintain Parameter 159 setting (supply air temperature) and satisfy the cooling demand.

If the unit is unable to satisfy the cooling demand using outdoor air, then the unit will react to the high cooling demand by initiating mechanical cooling while keeping the economizer at the fully open position. The unit controller will modulate mechanical cooling capacity based on the cooling load until the cooling demand has been satisfied

4.2.5.2. Start-up Delay in Room Sensor Mode

In Room Sensor Mode, the M4 unit controller initiates a start up delay on any power-up or reset (two minute default). During the delay, no blower, heating, or cooling operation will occur. This delay may be adjusted using Parameter 133 to stagger the start of each unit, reducing the initial power demand. Adjustable range is 2 to 30 minutes.

Go to RTU MENU > SETTINGS > RTU OPTION > EDIT PARAMETER = 133 (ZON SENS STRTUP DLY)

4.2.5.3. Blower Operation (Occupied) in Room Sensor Mode

In Room Sensor Mode, default operation, the M4 unit controller cycles the blower with a heat/cool demand. The menu path as listed in table 9 on page 11 will allow a change to continuous blower operation. The following are the OCC (OCCUPIED) blower mode description:

- **AUTO CYCLE**: Blower cycles with demand
- **ON-CONTINUOUS 1**: Blower is on when either the occupancy sensor or occupancy scheduler indicate occupied.
- **ON-CONTINUOUS 2**: Blower is on only WHEN BOTH the occupancy sensor and occupancy scheduler indicate occupied.
- **ON-CONTINUOUS 3**: Blower is only on when both the occupancy sensor and occupancy scheduler indicates occupied. Blower will be on a minimum of 25% of the time when occupancy scheduler indicates occupied but the occupancy sensor indicates not occupied. The 25% minimum is achieved by turning blower on for 30 minutes and off for 90 minutes.

4.2.5.4. Room Sensor Parameters

Any of the parameters listed can be directly modified using the following method:

Go to RTU MENU > SETTINGS > RTU OPTION > EDIT PARAMETER = (see Parameters 63, 64, 74, 75, 101 - 104, 133 and 137 - 152)

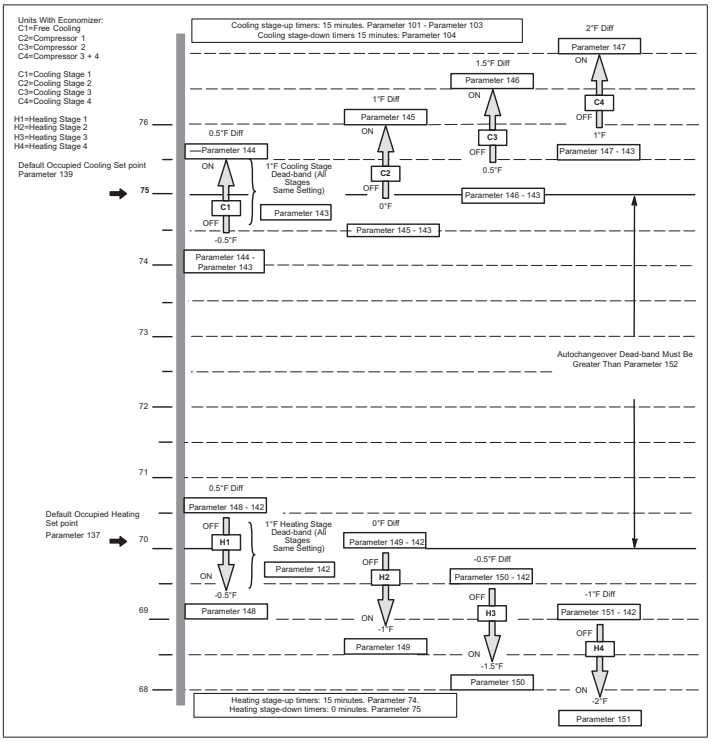

Figure 8. Room Sensor Stages for Gas / Electric Units (default values shown)

5. Unit Component Operation

5.1. Compressor Protection and Delays

NOTE: *If Parameter 89 is set with a minimum off delay and there is a new demand, the M4 unit controller display will indicate the demand is active (i.e., cooling). However, the compressor(s) will not come on until the delay time has been specified has been met.*

5.1.1. Compressor Minimum Run-Time Off-Delay

5.1.1.1. All Model L - LC/LG Ultra-High Efficiency Units

Model L Ultra-High Efficiency Units have both compressor Minimum Run-Time (default 240 seconds) and Minimum Off-Delay (default 300 seconds) and is always enabled. This method cannot be altered, however parameter time settings can be adjusted.

Go to RTU MENU > SETTINGS > RTU OPTION > EDIT PARAMETER = 91 (COMP MIN RUN TIME)

Go to RTU MENU > SETTINGS > RTU OPTION > EDIT PARAMETER = 89 (COMP MIN OFF DELAY)

5.1.1.2. All Other Model L Models

On all other Model L and Strategos models, Minimum OFF Time is enabled by default while Minimum Run Time is disabled by default.

Selecting the UNIT_OPERATION_DISABLE_SLUG_2_0' option will enable Minimum Run Time (Parameter 91) and disable the Minimum OFF Time (Parameter 89) protection for 3-phase systems only.

Go to RTU MENU > SETTINGS > RTU OPTION > EDIT PARAMETER = 91 (COMP MIN RUN TIME)

Go to RTU MENU > SETTINGS > RTU OPTION > EDIT PARAMETER = 89 (COMP MIN OFF DELAY)

NOTE: *For multiple compressors units, compressors will remain off for a user specified duration (Parameter 89), when the last running compressor is turned off due to completion of demand or a fault that cause both compressors to be shut down.*

5.1.2. Compressor On-Delay

On Model L models 036H, 048H and 060H the fan will start 11 seconds before starting the compressor. The time delay is fixed and cannot be altered.

This will allow the outdoor fan to come up to full speed for at least five seconds before the compressor starts. During this delay, the M4 unit controller will display on the screen (DELAY UP TO 20 SEC).

5.1.3. Freezestat

On Model L freezestat is no longer a mechanical switch, but controlled with a virtual software check based on monitoring SST sensor temp value.

5.1.4. Thermal Protection Switches (S5, S7, S8, S31 and S180)

NOTE: *Not all models use all of the reference switches. Verify with unit wiring diagram to confirm switch(es) used. Also refer the unit installation instruction for switches used and operation.*

Thermal protection switches open on a temperature rise to de-energize the corresponding compressor. Switches automatically reset when temperature drops.

The corresponding compressor is locked out after three occurrences (default) of either high pressure or high temperature conditions during a demand cycle. The number of occurrences can be changed using for Parameter 98. Adjustable range is 1 to 7 occurrences.

On certain compressors, these switches are in series with the high pressure switches, and will cause a 300 second delay (default) which is set using Parameter 110. This will also set off an alarm. Adjustable delay range is 64 to 1800 seconds.

Go to RTU MENU > SETTINGS > RTU OPTION > EDIT PARAMETER = 98 (MAX HP OCCURRENCES)

Go to RTU MENU > SETTINGS > RTU OPTION > EDIT PARAMETER = 110 (ERR TIME OFF DELAY)

NOTE: *Thermal protection switch alarms will not indicate an OFF ON ALARM state.*

5.1.4.1. Model L Ultra-High Efficiency Units (3- to 6-ton)

This model has a thermal protection switch connected to S7. When the compressor is de-energized due to an open thermal switch, alarm 192 is issued. When the compressor is locked out after three occurrences, alarm 193 is issued.

5.1.5. High Pressure Switches (S4, S7, S28 and S96)

High pressure switches open on a pressure rise to de-energize the corresponding compressor for 300 seconds (five minutes (default) which is set using Parameter 110. Switches automatically reset when pressure drops. The corresponding compressor is locked out after three occurrences (default) which is set using Parameter 98. Adjustable range is 1 to 7 occurrences. When a compressor is de-energized due to an open high pressure switch, alarm 12 (S4 switch), 14 (S7 switch), 16 (S28 switch) or 18 (S96) is issued.

NOTE: *The outdoor fan on Model L Standard, High and Ultra-High Efficiency 3- to 6-ton models continue to run even after a high pressure switch trip. On Model L High Efficiency 12.5 ton model, the outdoor fan continues to run even after a high pressure switch trip.*

NOTE: *Only the displayed alarm(s) will indicate that the applicable compressor has been de-energized. The system status on the display will only indicates the current demand type in this scenario.*

NOTE: *High pressure switch alarms will not indicate an OFF / ON ALARM state.*

The corresponding compressor is locked out after three occurrences (default) which is set using Parameter 98.

Go to RTU MENU > SETTINGS > RTU OPTION > EDIT PARAMETER = 98 (MAX HP OCCURRENCES)

5.1.5.1. Model L Ultra-High Efficiency Units (7-1/2 to 12-1/2 ton)

This model has one pressure switch (S4) that is connected in series with two temperature switches (S5 and S8) (see figure to right). If pressure switch trips, both compressors are de-energized. If only one temperature switch is tripped, only the applicable compressor will be de-energized.

5.1.5.2. Model L Ultra-High Efficiency Units (15- & 20-ton) — Tandem Compressors Units

This model has two pressure switches (S4 and S28) that are connected in series with thermal protection switches (S5 and S8). If a pressure switch opens, both compressors in tandem will shut-off. If only one compressor shuts-off, this usually indicates that the problem is related to a temperature switch.

5.1.6. Low Pressure Switches (S87, S88, S97 and S98)

Depending on the model, one to four low pressure switches may be employed. Refer to the unit installation instruction or wiring diagram to verify the number of switches.

Low pressure switches may trip during lower outdoor temperatures, especially with longer time periods between compressor cycling. Each compressor stage has low pressure switch protection which:

- Ignores the low pressure switch for a specified period of time after thermostat demand.
- De-energizes the compressor for five minutes (default) if the low pressure switch trips.
- The specified ignore time period can be adjusted using Parameter 100. Default is 120 seconds. Setting range is 0 to 600 seconds.

Go to RTU MENU > SETTINGS > RTU OPTION > EDIT PARAMETER = 100 (LP SW IGNORE TIME)

Locks out the compressor stage if the low pressure switch trips three times (default) within the same thermostat demand (once the ignore time period is elapsed).

The default setting can be changed by using Parameter 99. The valid number of occurrence range is 1 through 7. When a compressor is de-energized due to an open low pressure switch, alarm 22 (S87 switch) or 24 (S88 switch) is issued.

Go to RTU MENU > SETTINGS > RTU OPTION > EDIT PARAMETER = 99 (MAX LP OCCURRENCES)

NOTE: *Only the displayed alarm(s) will indicate that the applicable compressor has been de-energized. The system status on the display will only indicates the current demand type in this scenario.*

NOTE: *Low pressure switch alarms will not indicate an OFF ON ALARM state.*

5.1.7. Loss of Power Detection (Single-Phase Units Only)

The M4 unit controller will turn off compressors for five minutes (default) if a loss of power is detected for two consecutive AC power cycles. This indicates a problem with supply voltage; waiting five minutes allows pressures to equalize ensuring start-up. This is set using Parameter 110. Adjustable delay range is 64 to 1800 seconds.

Go to RTU MENU > SETTINGS > RTU OPTION > EDIT PARAMETER = 110 (ERR TIME OFF DELAY)

5.2. Gas Units Burner Protection and Delays

5.2.1. Primary or Secondary Limits (S10 and S99)

If primary or secondary limits open during heating, the M4 unit controller will de-energize the gas valve and energize the blower. If primary or secondary limits open three times during a thermostat cycle, the heat section operation will be locked out for one hour.

5.2.2. Flame Roll-Out Switches (S47 and S69)

If the roll-out switch opens, the gas valve will be de-energized and a manual reset of the flame roll-out (ROL) switch is required to restart.

5.2.3. Combustion Air Inducer (CAI) Proof Switches (S18 and S45)

5.2.3.1. Open Proof Sequence of Operations

- The M4 unit controller will set alarm 166 and/or 167 if either S18 or S45 are not proved open while the combustion air blower is not energized. If gas heat demand is still present, the M4 unit controller will attempt to prove either S18 or S45 are in a open condition every 60 seconds.
- If either S18 or S45 are proven as open, the M4 unit controller will proceed with the gas heat demand (i.e., energize the combustion air blower).
- Even while lockout alarm(s) 168 and/or 169 are active, the M4 unit controller will continue attempting if either S18 or S45 are open. Parameter 72 - Max CAI No Open Proof Occurrences default setting is 5 and it is adjustable from 1 to 15 occurrences.
- The M4 unit controller will set alarm(s) 168 and/or 169 (instead of 166/167) if either S18 or S45 are not proved open while the combustion air blower is not energized, for 5 consecutive times during a single cycle. Even while alarm(s) 168 and/or 169 are active, the M4 unit controller will continue attempting to prove that either S18 and/or S45 are open.

Go to RTU MENU > SETTINGS > RTU OPTION > EDIT PARAMETER = 72 (MAX CAI NO PRF OCC)

5.2.3.2. Open Proof Alarms

Open proof alarms are 166 through 169.

5.2.3.3. Closed Proof Sequence of Operations

a. The M4 unit controller will set an alarm(s) (Alarm 56 or 66) if:

- If either S18 or S45 switches are not sensed as closed within 30 seconds of energizing the combustion air inducer.
- If either S18 or S45 switches are sensed as open for three seconds while gas heat demand is active.

b. The M4 unit controller will set an alarm(s) 57 and/or 67 when three-strikes occur during a single-demand. Parameter 71 default setting is 3 and it adjustable from 1 to 5 occurrences. To view or change the number of occurrences setting:

Go to RTU MENU > SETTINGS > RTU OPTION > EDIT PARAMETER = 71 (MAX CAI NO SW OCC).

NOTE: *In addition, even if Parameter 71 is set to an alternate occurrence number, the alarm itself will indicate three strikes.*

5.2.3.4. Closed Proof Alarms

Closed proof alarms are 56, 57, 66 and 67.

5.2.4. Gas Valve Sensor Activation Feedback

If M4 unit controller does not detect that gas valve is energized within two minutes after a heating demand, it will display and store error code 58 for gas heat section 1 and alarm 68 for gas heat section 2.

If the gas valve is energized and de-energized three times (default) during a single heating demand, the M4 will display and store error code 59 for the gas heat section 1 and alarm 60 for gas heat section 2.

The service relay will be activated if configured.

The default setting for Parameter 73 is three occurrences with a valid range setting of 1 to 5.

Go to RTU MENU > SETTINGS > RTU OPTION > EDIT PARAMETER = 73 (MAX GV SENSE OCC)

If the gas valve is energized without a heating demand the M4 unit controller will de-energize all heat control outputs. The Service Output will be turned on if it is configured for alarm reporting (default setting).

5.2.5. Gas Heat Valve Delays

The M4 unit controller has a model dependent time delay setting (Parameter 69 - HT GAS HI FIRE DLAY) between first- and second-stages. Parameter 70 - HT GAS OFF DELAY provides timed-off delay that will prevent gas heat operation until 100 seconds (factory default) has passed from the previous cycle. Configurable delay options for Parameter 70 are 30 to 300 seconds.

Go to RTU MENU > SETTINGS > RTU OPTION > EDIT PARAMETER = 70 (HT GAS OFF DELAY)

5.3. Miscellaneous Components

5.3.1. Thermostat Bounce Delay (Wired Thermostat Mode Only)

The M4 unit controller will automatically ignore wired thermostat inputs for three seconds to prevent sporadic on/off cycling. The function is non-adjustable.

5.3.2. Return Air Temperature Limits

The M4 Unit controller may be set up to monitor return air temperature and interrupt the demand if return temperature is above (in heating) or below (in cooling) adjustable limits. Alarm codes 40 or 41 are displayed but not stored in memory for recall.

- Adjusting Parameter 113 enables return room temperature limits. Default is 0 (OFF). To enable set to 1 (ON).

Go to RTU MENU > SETTINGS > RTU OPTION > EDIT PARAMETER = 113 (EN RET AIR TMP LMT)

- Adjusting Parameter 114 is used to interrupt a cooling demand. Default is 65.0°F. Adjustable range is 60.0°F to 80.0°F.

Go to RTU MENU > SETTINGS > RTU OPTION > EDIT PARAMETER = 114 (COOL RET AIR LIMIT)

- Adjusting Parameter 115 is used to interrupt a heating demand. Default is 85.0°F. Adjustable range is 60.0°F to 100.0°F.

Go to RTU MENU > SETTINGS > RTU OPTION > EDIT PARAMETER = 115 (HEAT RET AIR LIMIT)

5.3.3. Smoke Detector (A171 and A172 - Optional)

A171 is for return air and A172 is for supply air. If smoke detector senses smoke, normally open contacts close. The M4 unit controller by default turns off the unit and closes the economizer dampers. Variations in damper position, power exhaust and blower operation may be changed by Parameter 109.

Go to RTU MENU > SETTINGS > RTU OPTION > EDIT PARAMETER = 109 (SMOKE ALARM CONTROL)

Table 13. Smoke Alarm Control

Parameter 109 Option	Blower	Exhaust (1 or 2 Stage)	Exhaust (VFD)	Fresh Air Damper	Description
0	Off	Off	Off	Closed	Unit Off
2	Off	On	Off	Closed	Negative Pressure with blower exhaust fan at fixed speed
4	Off	Off	On	Closed	Negative Pressure. Exhaust Fan Modulates
9	On	Off	Off	Open	Positive Pressure
10	On	On	Off	Closed	Negative Pressure with blower exhaust fan at fixed speed
11	On	On	Off	Open	Purge - Exhaust fan at fixed speed
12	On	Off	On	Closed	Negative Pressure with Blower. Exhaust Fan Modulates
13	On	Off	On	Open	Purge - Exhaust Fan Modulates

5.3.4. Safety Switch Input (A42-Optional)

The M4 unit controller has 24VAC optional inputs (D1-2 or DI-3) which may be used for additional safety switches (such as a blower overload, loss of phase protector, or supply duct high pressure limit switch). Wire the safety switch in series with the input.

When the normally open Safety Switch A42 is open, the M4 unit controller will turn off all outputs and display alarm 20. Once the switch has been physically installed, perform the following procedure to enable safety switch monitoring:

Go to RTU MENU > SETUP > INSTALL > CONFIGURATION ID 2

Position 5 will need to be set to either 2 or 3 depending on whether A42 is wired on DI-2 or DI-3.

5.3.5. Air Flow Proving Switch (S52 - Optional)

The air flow switch closes during normal unit operation. If air flow is not established (S52 closed) within 16 seconds of blower start, or if the S52 opens at any time after that, the M4 unit controller de-energizes the compressor, gas valves, electric heat, and closes economizer damper. The service alarm output will turn on.

Go to RTU MENU > SETUP > INSTALL > CONFIGURATION ID 2

Position 1 and set to **C** to enabled the air flow proving switch monitoring via the M4 Unit controller.

If S52 is physically connected to a DDC controller and Configuration ID 2 position 1 is set to **D**, then the M4 unit controller will not monitor S52 using this configuration.

5.3.6. Dirty Filter Switch (S27- Optional)

The dirty filter switch is open during normal unit operation. A dirty filter will close S27 and the M4 unit controller will display and store the error code and turn on the service alarm output (if configured).

Go to RTU MENU > SETUP > INSTALL > CONFIGURATION ID 2

Position 2 will need to be set to **C**. This will enable the dirty filter switch when installed.

5.3.7. Blower Overload Relay Switch (S42 - Optional)

S42 is a three-phase thermal overload relay. This switch is connected in line with the blower motor to monitor the current flow to the motor. When the relay senses current that exceeds the operating limits of the motor, a set of normally closed contacts open to de-energize the blower.

Go to RTU MENU > SETUP > INSTALL > CONFIGURATION ID 2

Position 4 has to be set to either **2** or **3** to enable the blower overlay relay switch if installed.

NOTE: *The N setting option will disable S42 monitoring of 2 (DI-2) or 3 (DI-3).*

5.3.8. Overflow Switches (S149 / S179 - Optional)

The N.C. overflow switch or switches are connected to the M4 unit controller (A55) in series (when applicable) through either D1-2 or DI3. When the switch opens, the unit controller will de-energize the compressor. After a five minute time out, the unit controller will verify the overflow switch position and restart the compressor(s) as long as a cooling demand is present (if the switch has closed).

Go to RTU MENU > SETUP > INSTALL > CONFIGURATION ID 2

Position 3 has to be set to either **2** or **3** to enable the overflow switch if installed.

NOTE: *Overflow switch alarms will not indicate an OFF ON ALARM state.*

5.3.9. Blower On-Delay

- For electric heat units, the Blower On-Delay is disabled and is not adjustable.
- For gas units, the blower is delayed 40 seconds (default) which is set using Parameter 66, after the gas valve is energized. Adjustable range is 8 to 60 seconds.

Go to RTU MENU > SETTINGS > RTU OPTION > EDIT PARAMETER = 66 (HT GAS BLR ON DELAY)

- For gas units (Model L Standard Efficiency 3- to 6-ton units), the blower on is delayed 20 seconds (default) after the gas valve is energized. This value is fixed and cannot be changed.
- For cooling units, the blower is delayed zero seconds (default) which is set using Parameter 79. Adjustable range is 0 to 60 seconds.

Go to RTU MENU > SETTINGS > RTU OPTION > EDIT PARAMETER = 79 (COOL BLR ON DELAY)

- On Model L Ultra High Efficiency 3- to 6-ton models blower on-delay is disabled and not adjustable.

5.3.10. Blower Off-Delay

- For electric heat units, the blower off is delayed 20 seconds (default) from the time the heating call is terminated. The blower delay is adjustable using Parameter 60. Parameter range setting is 0 to 300 seconds.

Go to RTU MENU > SETTINGS > RTU OPTION > EDIT PARAMETER = 60 (HT ELEC BL OFF DLAY)

- For gas units, the blower off is delayed 120 seconds (default) from the time the heating call is terminated. The blower delay is adjustable using Parameter 67. Parameter range setting is 80 to 300 seconds.

Go to RTU MENU >SETTINGS > RTU OPTION > EDIT PARAMETER = 67 (HT GAS BLR OFF DLAY)

- For gas units (Model L LG -3 to 6-ton), the blower off is delayed 180 seconds (default) from the time the heating call is terminated. This value is fixed and cannot be changed.
- For cooling units, the blower off is delayed 60 seconds (default) from the time the cooling call is terminated. The blower delay is adjustable using Parameter 80. Parameter range setting is 0 to 240 seconds.

Go to RTU MENU >SETTINGS > RTU OPTION > EDIT PARAMETER = 80 (COOL BLR OFF DELAY)

- On Model L Ultra High Efficiency 3- to 6-ton models blower off-delay is disabled and not adjustable.

5.3.11. Unoccupied or Night Setback Mode

During an unoccupied time period dampers do not operate at minimum position (no minimum ventilation requirements during unoccupied period).

5.3.12. Wired Thermostat Mode

The unoccupied time period occurs when there is no input at A55_P297-8.

5.3.13. Room Sensor Mode

The occupied time period is controlled by the optional network control panel when installed. The 24VAC input at unit is ignored while in room sensor mode except during back-up operation.

5.3.14. Gas and Electric Heat Warm-Up Mode (During Occupied Time Period)

Many building codes require a percentage of fresh outdoor air when a conditioned space is occupied. A 24VAC input at unit A55_P297-8 energizes the “occupied” (usually daytime) time period. A field-provided and installed thermostat or energy management system provides the input.

- The first 60 minutes (default) of the first heating demand of the occupied time period is called the warm-up mode.
- During the warm-up mode the M4 unit controller keeps economizer dampers closed to conserve energy (Parameter 58 and Parameter 65). Default for both Parameters is 3584 seconds. Range setting is 0 to 8160 seconds.

Go to RTU MENU > SETTINGS > RTU OPTION > EDIT PARAMETER = 58 (HT ELEC WARMUP DLAY)

Go to RTU MENU > SETTINGS > RTU OPTION > EDIT PARAMETER = 65 (HT GAS WARMUP DELAY)

- The warm-up mode may be bypassed by going to the user interface and clear delays.

Go to RTU MENU > SERVICE > ADVANCED CONTROL > CLEAR DELAYS = YES or NO

5.3.15. Cool-Down Delay (During Occupied Time Period)

To conserve energy, the M4 unit controller ignores second-stage cooling demand and the economizer opens the first 30 minutes (default) OR one cooling cycle (whichever happens first) when the occupied time period starts. The cool-down delay applies only when outdoor air is suitable for free cooling (Parameter 78).

Go to RTU MENU > SETTINGS > RTU OPTION > EDIT PARAMETER = 78 (COOL DOWN DELAY)

The cool-down delay may be bypassed by going to the user interface and clear delays.

Go to RTU MENU > SERVICE > ADVANCED CONTROL > CLEAR DELAYS = YES or NO

5.4. Gas Heat Operation—Gas Units

The CORE Control System has gas heat output control for up to two gas heat sections with two-stage gas valves.

NOTE: *M4 unit controller controls the first heat circuit and C4 controls the second heat circuit.*

5.4.1. Heat Speeds

When heating option is set to D (10th character in the model number), the blower speed is as follows:

- W1 - Low Heat Speed
- W2 - High Heat Speed

When heating option is set to B, Q, X (10th character in the model number), and 12th character is set to `P’ (single phase) the blower speed is as follows:

- W1 - Low Heat Speed
- W2 - High Heat Speed

When heating option is set to any other character, the blower speed is as follows:

- W1 - High Heat Speed
- W2 - High Heat Speed

5.5. Electric Heat Operation

5.5.1. Electric Heat Stage Delay Operation

First-stage heating demand energizes first-stage electric heat (K15 and K17). Second-stage heating demand energizes second-stage electric heat (K16 and K18). When first-stage and second-stage heating demands are simultaneous, a delay will occur between stage one and two (Parameter 62). Default delay is 12 seconds. Optional range setting is 12 to 60 seconds.

Go to RTU MENU > SETTINGS > RTU OPTION > EDIT PARAMETER = 62 (HT ELEC STAGE DELAY)

5.5.2. Primary or Secondary Limits

- If an electric heat limit (S15 or S63) opens, electric heat is de-energized.
- If an electric heat limit opens three times (default) during a thermostat cycle, in addition, the service alarm output will turn on. Valid options for Parameter 61 are 1 through 15.

Go to RTU MENU > SETTINGS > RTU OPTION > EDIT PARAMETER = 61 (HT ELEC MAX LT OCC)

6. Sensors

The M4 unit controller is only compatible with L Connection sensors provided with the unit or purchased separately as specified in the Product Specification.

IMPORTANT

All 0-10 VDC sensors require two separate twisted pair cables with shield. One cable is used for the 24VAC power and one cable is used for the 0-10 VDC output. Room sensors require a single twisted pair cable with shield. The shield drain wires must be connected to the common at the unit field wiring terminal block only. The shield drain wires must not be connected to common at the sensor. Non-communicating temperature sensors require single twisted pair wire only.

6.1. Temperature Sensors - Provided With Unit

The return air (RT16) and discharge air (RT6) duct probes and the outdoor air (RT17) are all two wire thermistors. The resistance vs. temperature table is shown below:

Table 14. Resistance Vs. Temperature

Temp. °F (°C)	Resistance +/-2%	Temp °F (°C)	Resistance +/-2%	Temp. °F (°C)	Resistance +/-2%
-40 (-40)	335,671	40 (4.4)	26,106	90 (32.2)	7,332
-20 (-28.9)	164,959	50 (10)	19,904	100 (37.8)	5,826
0 (-17.8)	85,323	60 (15.6)	15,313	120 (48.9)	3,756
20 (-6.7)	46,218	70 (21.1)	11,884	130 (54.4)	3,047
30 (-1.1)	34,566	80 (26.7)	9,298		

6.2. Room Sensor - Optional

Room sensor (A2) is a two-wire thermistor with 1k series resistor.

Table 15. Two-Wire Thermistor

Temp. °F (°C)	Resistance +/-2%	Temperature °F (°C)	Resistance +/-2%	Temp. °F (°C)	Resistance +/-2%
40 (4.4)	27,102	60 (15.6)	16,313	80 (26.7)	10,299
45 (7.2)	23,764	65 (18.3)	14,474	85 (29.4)	9,249
50 (10)	20,898	70 (21.1)	12,882	90 (32.2)	8,529
55 (12.8)	18,433	75 (23.9)	11,498		

6.3. Relative Humidity Sensor - Optional

The indoor relative humidity sensor (A91) is an analog sensor with a 0-10 VDC output over a relative humidity range of 0-100% relative humidity. The sensor is powered with 24VAC.

6.4. Carbon Dioxide (Indoor Air Quality) Sensor - Optional

The indoor carbon dioxide sensor (A63) is an analog sensor with a 0-10 VDC output over a carbon dioxide range of 0-2000 ppm as shown in the following table. The sensor is powered with 24VAC.

Table 16. Carbon Dioxide Range

Carbon Dioxide PPM	DC Voltage	Carbon Dioxide PPM	DC Voltage	Carbon Dioxide PPM	DC Voltage	Carbon Dioxide PPM	DC Voltage
0	0	600	3	1200	6	1800	9
200	1	800	4	1400	7	2000	10
400	2	1000	5	1600	8		

6.5. Supply Static Pressure Sensor - Optional

The supply duct differential static pressure sensor (A30) is an analog sensor with a 0-10 VDC output over a range of 0-5”w.c as shown in the following table. The sensor is powered with 24VAC.

Table 17. Supply Static Pressure Sensor

Pressure "w.c.	DC Voltage	Pressure "w.c.	DC Voltage	Pressure "w.c.	DC Voltage	Pressure "w.c.	DC Voltage
0	0	1.5	3	3	6	4.5	9
0.5	1	2	4	3.5	7	5	10
1	2	2.5	5	4	8		

6.6. Enthalpy Sensor - Optional

The optional enthalpy sensors (A7 and A62) used with the economizer have an output of 4-20mA. The sensor is powered with 18VAC provided by M4 unit controller.

6.7. Economizer Differential Pressure Sensor - Optional

Rooftop units installed with Smart Airflow™ will have a Pressure Transducer (PT5) present in the economizer. PT5 requires 5VDC power supply (P266-5 and P266-6) and gives 0.25 VDC to 4 VDC output (P266-4) corresponding to 0” water column and 2” water column respectively. For all practical purposes the output should be less than 1.2” water column. If not then an error code is stored and service alarm output is turned on.

7. Outdoor Fan Operations

7.1. High Ambient Conditions

7.1.1. Model L Ultra-High Efficiency - B and C Box (7-1/2- to 20-ton)

Under high ambient conditions (outdoor air temperature greater than 105°F), if one or both compressors are running, then all the fans corresponding to that circuit, run at speed set in Parameter 96 - FAN HI AMBIENT SPD. When the outdoor air temperature drops below 100°F, the fans will switch to normal ambient condition speed.

7.2. Normal Ambient Conditions

7.2.1. Model L Ultra-High Efficiency - A Box (3- to 6-ton)

During normal ambient operation, the fan speed is based on the compressor speed.

7.2.2. Model L Ultra-High Efficiency - B Box (7-1/2- to 12-1/2 ton)

Under normal ambient conditions the fan speed for part load and full load are as follows:

- 12.5 ton: Full load speed is 70% and part load is 50%
- 10 ton: Full load speed is 70% and part load is 50%
- 7.5 ton: Full load speed is 70% and part load is 40%

7.2.3. Model L Ultra-High Efficiency C Box (15- and 20-ton)

Under normal ambient conditions the fan speed for part load and full load are as follows:

- 15 ton full load speed is 70% and part load speed is 40%
- 20 ton full load speed is 75% and part load speed is 45%

7.3. Low Ambient Conditions (S11, S84, S85 and S94)

See table 16 for fan layouts and tables 17 through 19 for low ambient fan operations.

7.3.1. Model L Standard Efficiency - A Box (3- to 5-Ton), High Efficiency (6-Ton)

During low ambient conditions, the outdoor fan is cycled by liquid line pressure switch S11. The M4 unit controller will also de-energize fan due to low outdoor temperature. See unit installation instruction or service manual for specific operational details. Low ambient temperature lockout for the compressor can be set using Parameter 85.

7.3.2. Model L High Efficiency - A Box (3- to 5-Ton)

The outdoor fan in Model L High Efficiency (3 - 5 Ton) unit operates at three distinct speeds; High, Low and Extra-low. At higher outdoor temperatures, (above 65°F), the fan operates at high speed for a high cooling demand and at low speed for a low cooling or de-humidification demand. At low outdoor temperatures, the fan is off until the liquid pressure switch, (S11) closes. Then the fan runs at extra-low speed. See unit installation instruction or service manual for specific operational details. Low ambient temperature lockout for the compressor can be set using Parameter 85.

The Strategos High Efficiency A Box 5 Ton unit is equipped with two outdoor fans. During low ambient conditions, both outdoor fans are cycled by liquid line pressure switch S11.

7.3.3. Model L Ultra-High Efficiency - A Box (3- to 6-ton)

Low ambient operation is activated when the outdoor temperature drops below 62°F. At low outdoor temperatures, the fan is off until the liquid pressure switch (S11) closes. Then the fan runs at 25% of full speed.

7.3.4. Model L Ultra-High Efficiency - B and C Box (7-1/2- to 20-ton)

The following is the sequence of operations for the outdoor fans during low ambient conditions:

- Low ambient operations will be activated based on the Parameter 84 (Low Ambient Outdoor Air Limit Temperature 2 Set Point). Factory default setting is 55°F.

Go to RTU MENU > SETTINGS > RTU OPTION > EDIT PARAMETER = 84 (LAC SP TEMP 2)

- Low ambient is deactivated when outdoor air temperature exceeds Parameter 84 + 3°F.
- During normal operation all fans are energized. During low ambient operation, two fans are de-energized on the Model L Ultra-High Efficiency 7-1/2 to 12-1/2 ton units leaving a single fan energized and four fans are de-energized on the Model L Ultra-High Efficiency 15 and 20-ton units leaving two fans energized. During low ambient operation, the fan speeds are determined by the number of compressors running per refrigeration circuit. If one compressor is running the corresponding fan will run at part load low ambient speed, if two compressors are running the corresponding fan will run at full load low ambient speed.

- During low ambient operation, the fan speed is based on the outdoor air temperature and the number of running compressors in the corresponding refrigeration circuit.
- When switching back from low ambient to normal operation, the energized fan for each circuit will be de-energized, then all fans will be re-energized simultaneously after a user configurable delay.
- The delay is set using Parameter 82 - COND FAN RESTRT DLY.

The outdoor fan in Model L High Efficiency 12.5 ton units operates at two distinct speeds which are high and low. The fans operate at high speed during normal ambient conditions and at low speed during low ambient conditions. Low ambient operation is activated when the outdoor temperature drops below 55°F (Parameter 84). At low outdoor temperatures, the fan is off until the liquid pressure switches (S11 and S84) close. Outdoor fans must be started at high speed and run for five (5) seconds before switching to low speed.

7.3.5. Model L High Efficiency (12-1/2 ton)

See unit installation instruction or service manual for specific operational details.

7.4. Compressor / Fan Configurations

Table 18. Key

Key	Description	Key	Description
A55	M4 board. Main RTU control board	**K14**	Contactor, Compressor 3
A178	Panel, Compressor 3 and 4, C3 second stage heat	**K68**	Relay, Outdoor Fan 2
B4	Motor, Outdoor Fan 1	**K146**	Contactor, Compressor 4
B5	Motor, Outdoor Fan 2	**K149**	Relay, Outdoor Fan 3
B21	Motor, Outdoor Fan 3	**K150**	Relay, Outdoor Fan 4
B22	Motor, Outdoor Fan 4	**K152**	Relay, Outdoor Fan 5
B23	Motor, Outdoor Fan 5	**K153**	Relay, Outdoor Fan 6
B24	Motor, Outdoor Fan 6	**PWM**	Pulse Width Modulated Signal from CORE Control System (ECM only)
CP1	Compressor 1	**40°F**	CORE Control System de-energizes fan below 40°F / 4.4°C
CP2	Compressor 2	**55°F**	CORE Control System de-energizes fan below 55°F / 13°C (default Parameter = 84 B-Box, 83 B-Box Ultra)
CP3	Compressor 3	**S11**	Switch, Low Pressure Low Ambient Kit, Compressor 1
CP4	Compressor 4	**S84**	Switch, Low Pressure Low Ambient Kit, Compressor 2
K1	Contactor, Compressor 1	**S85**	Switch, Low Pressure Low Ambient Kit, Compressor 3
K2	Contactor, Compressor 2	**S94**	Switch, Low Pressure Low Ambient Kit, Compressor 4
K10	Relay, Outdoor Fan 1		Fan energized when liquid pressure is higher than 450 psig (HFC-410A); de-energized when liquid line pressure is less than 240 psig (HFC-410A). ***NOTE:*** *A Box unit fans are de-energized at 140 psig.*

Table 19. Number of Compressor / Fans and Fan Layouts

Box Size	Fan Layout	Models	Compr.	Fans
A BOX		LCM, LGM 036S, 048S, 060S and 072H	1	1
		LCM, LGM 036H, 048H, 060H and 074H	1 (2 step)	1 (variable)
		LCM, LGM 036U, 048U, 060U and 074U	1 (variable)	1 (variable)
B BOX	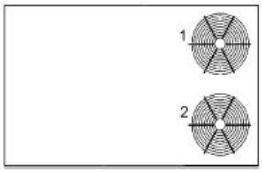	LCM, LGM 092H, 102H, 120H, 150H and 150S	2	2

Table 19. Number of Compressor / Fans and Fan Layouts

Box Size	Fan Layout	Models	Compr.	Fans
C2 BOX	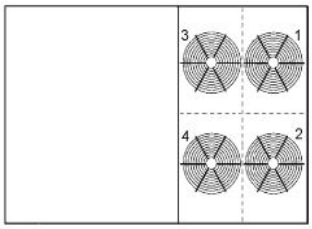	LCM, LGM 180H	3	4
C3 BOX	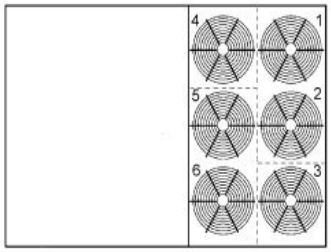	LCM, LGM 210H	3	6
		LCM, LGM 240/300S	4	6
		LCM, LGM 180U, 240U and 300U	4 (2 tandem sets)	6 (variable)
D BOX	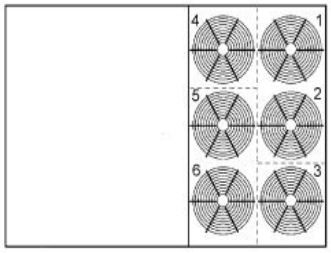	LCM, LGM 242H, 300H and 360h	4	6

7.5. Low Ambient Outdoor Fan Control and Cycling

During low ambient conditions, various outdoor fans are cycled by liquid line pressure switches; S11, S84, S85 and S94. The M4 unit controller will also de-energize fans due to low outdoor temperature. See Table 20 through Table 25 for further details.

7.5.1. A Box Standard, High and Ultra-High Efficiency Units (3-, 4-, 5- and 6-Ton)

Table 20. Low Ambient Fan Operation

Models	Fan	Associated Compressor	Low Ambient Control OD Temp < Parameter 84 (55°F)
LCM, LGM 036S, 048S, 060S and 072H	1	1	On with S11
LCM, LGM 036H/U, 048H/U, 060H/U and 072H/U			

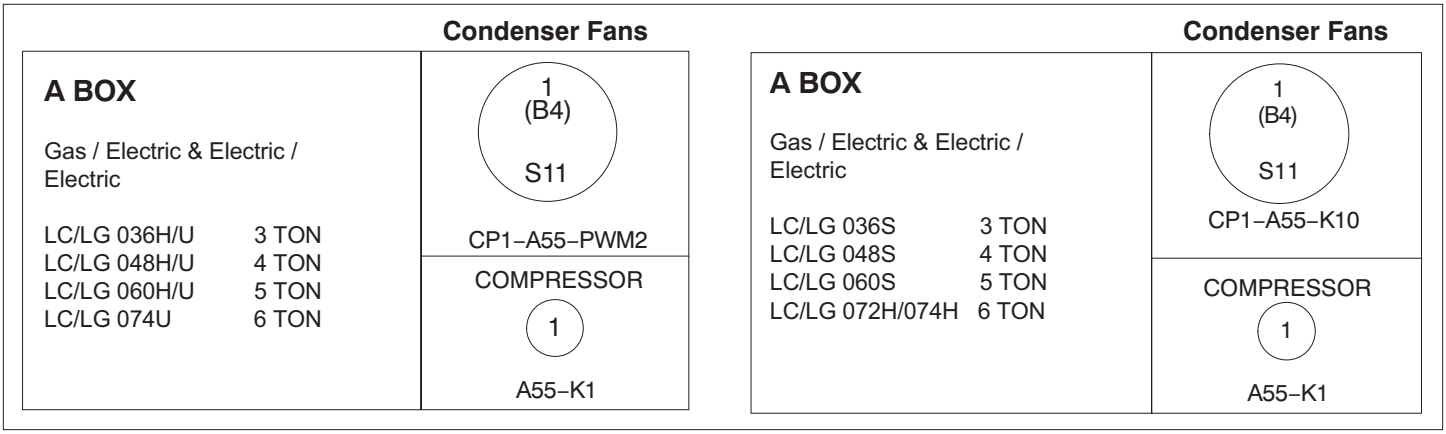

7.5.2. B Box Standard and High (7.5-, 8.5-, 10-, and 12-Ton)

Table 21. Model L B Box Standard, High and Ultra-High Efficiency Units (7.5-, 8.5-, 10-, 12- and 12.5-Ton)

Models	Fan	Associated Compressor	Low Ambient Control OD Temp < Parameter 84 (55°F)
LCM, LGM 092H, 102H, 120H, and 150S	1	1, 2	OFF
	2	1, 2	On with S11 or S84
LCM, LGM 150H	1	1	On with S11 at Low Speed
	2	2	On with S84 at Low Speed

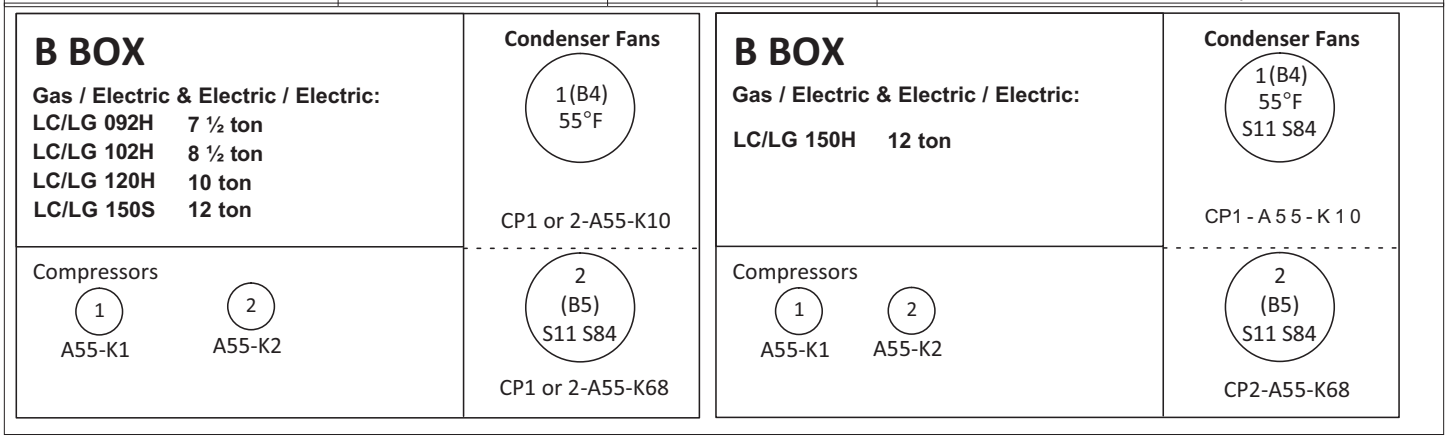

7.5.3. C Box High and Ultra-High Efficiency Units (15- and 20-Ton)

Table 22. Low Ambient Fan Operations (C Box Standard, High and Ultra-High Efficiency Units)

Models	Fan	Associated Compressor	Low Ambient Control OD Temp < Parameter 84 (55°F)
LCM, LGM 180H	1	1, 3	On with S11, S84 or S85
	2	1, 3	OFF
	3	2, 3	On with S84 or S85
	4	2, 3	OFF
LCM, LGM 180U, 240U and 300U	1	1, 2	OFF
	2	1, 2	OFF
	3	1, 2	ON with S11
	4	3, 4	ON with S85
	5	3, 4	OFF
	6	3, 4	OFF with S85
	Compressor 1 and 2 use S11 and compressor 3 and 4 would use S85.		

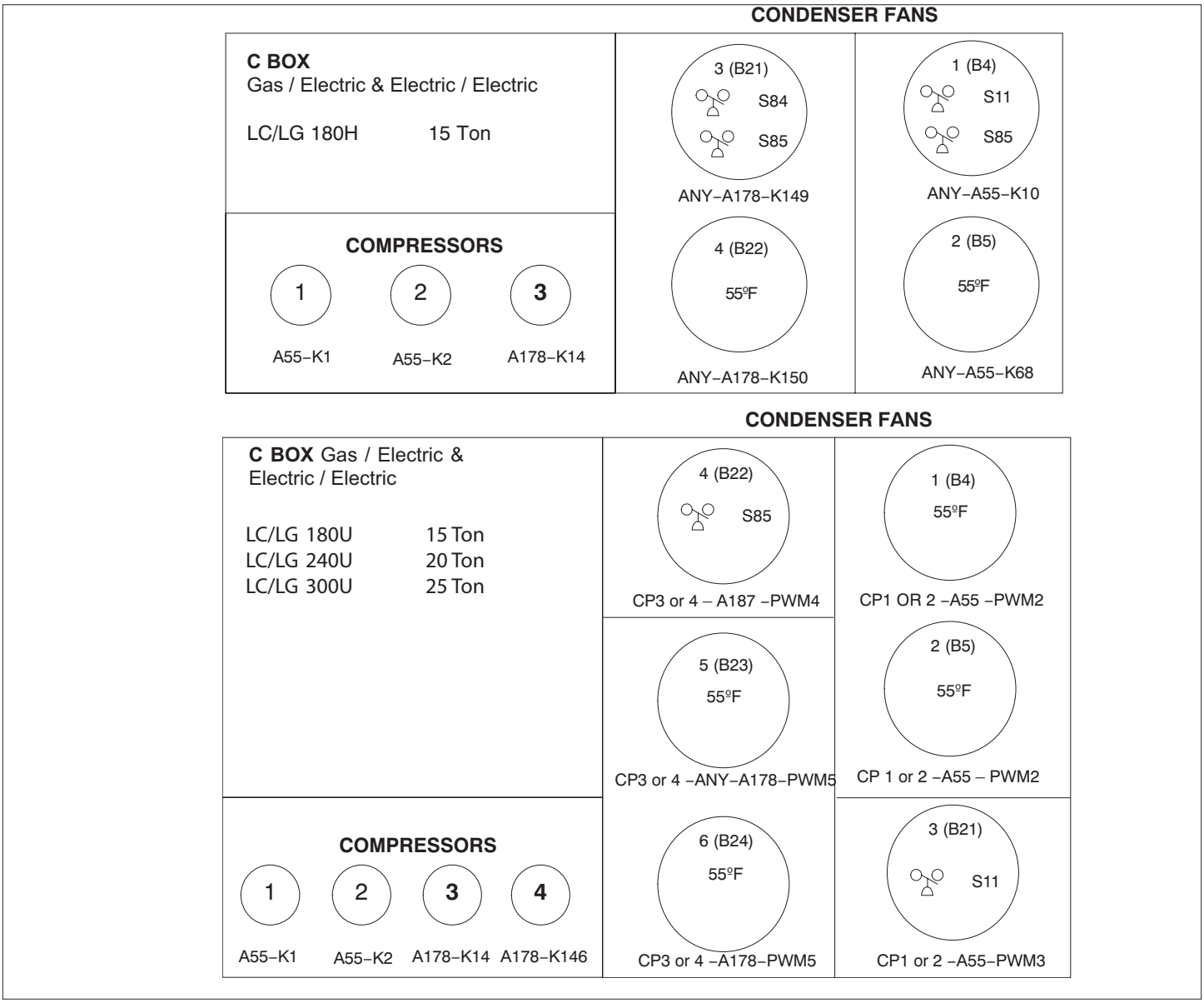

7.5.4. C Box Standard and High Efficiency Units (17.5-, 20- and 25-Ton)

Table 23. Low Ambient Fan Operations (C Box Standard and High Efficiency Units)

Models	Fan	Associated Compressor	Low Ambient Control OD Temp < Parameters 84 (55°F) and > Parameter 83 (40°F)	Low Ambient Control OD Temp < Parameter 83 (40°F)
LCM, LGM 210H	1	1, 3	On with CP1 or CP3	OFF
	2	1, 3	OFF	OFF
	3	1, 3	On with S11, S84 or S85	On with S11, S84 or S85
	4	2, 3	On with S84 or S85	On with S84 or S85
	5	2, 3	OFF	OFF
LCM, LGM 240H/300S	1	1, 2	On with CP1 or CP2	OFF
	2	1, 2	OFF	OFF
	3	1, 2	On with S11 or S84	On with S11 or S84
	4	3, 4	On with S85 or S94	On with S85 or S94
	5	3, 4	OFF	OFF
	6	3, 4	On with CP3 or CP4	OFF

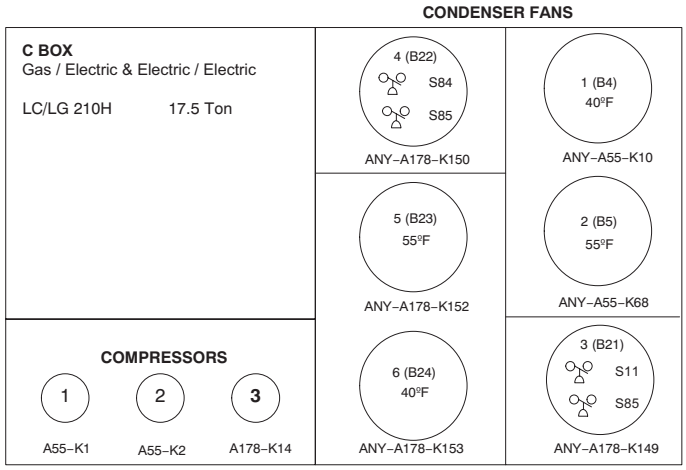

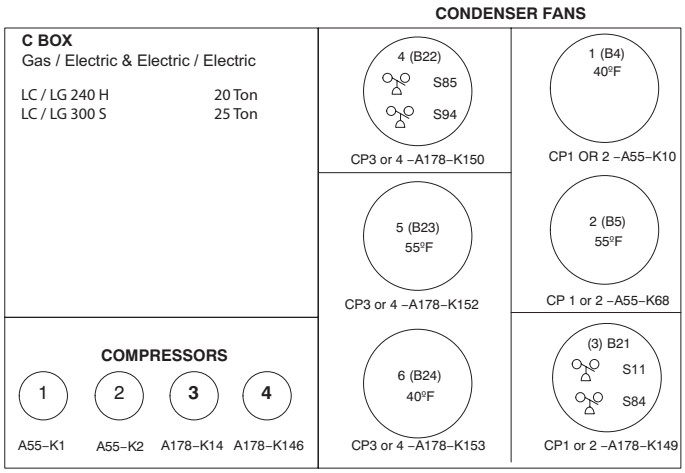

7.5.5. D Box High Efficiency Units (20-, 24-, 25- and 30-Ton)

Table 24. Low Ambient Fan Operations (D Box High Efficiency Units)

Models	Fan	Associated Compressor	Low Ambient Control OD Temp < Parameters 84 (55°F) and > Parameter 83 (40°F)	Low Ambient Control OD Temp < Parameter 83 (40°F)
LCM, LGM 242 H LCM, LGM 300 H LCM, LGM 360 H	1	1, 2	On with CP1 or CP2	OFF
	2	1, 2	OFF	OFF
	3	1, 2	On with S11 or S84	On with S11 or S84
	4	3, 4	On with S85 or S94	On with S85 or S94
	5	3, 4	OFF	OFF
	6	3, 4	On with CP3 or CP4	OFF

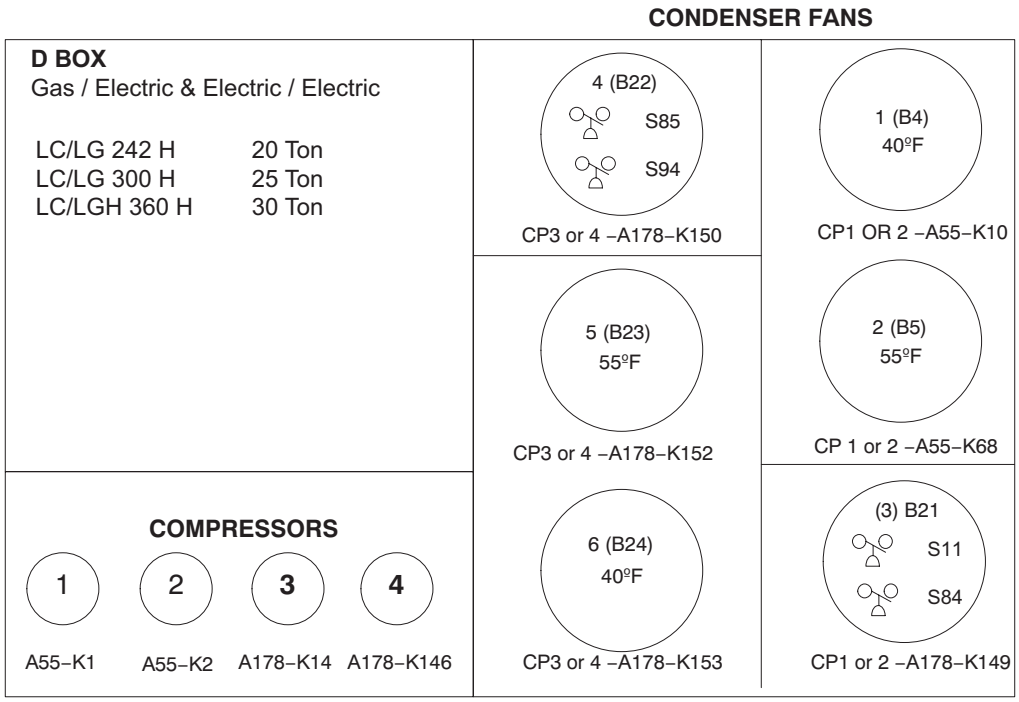

7.5.6. Model L E Box High Efficiency Units (35-, 40-, 45- and 50-Ton)

Table 25. Low Ambient Fan Operations (E Box Standard and High Efficiency Units)

Models	Fan	Associated Compressor	Low Ambient Control OD Temp < Parameters 84 (55°F) and > Parameter 83 (40°F)	Low Ambient Control OD Temp < Parameter 83 (40°F)
LCM, LGM 420 S LCM, LGM 420 H LCM, LGM 480 S LCM, LGM 480 H LCM, LGM 540 S LCM, LGM 600 S	1	1, 2	On with CP1 or CP2	OFF
	2	1, 2	OFF	OFF
	3	1, 2	On with S11 or S84	On with S11 or S84
	4	3, 4	On with S85 or S94	On with S85 or S94
	5	3, 4	OFF	OFF
	6	3, 4	On with CP3 or CP4	OFF

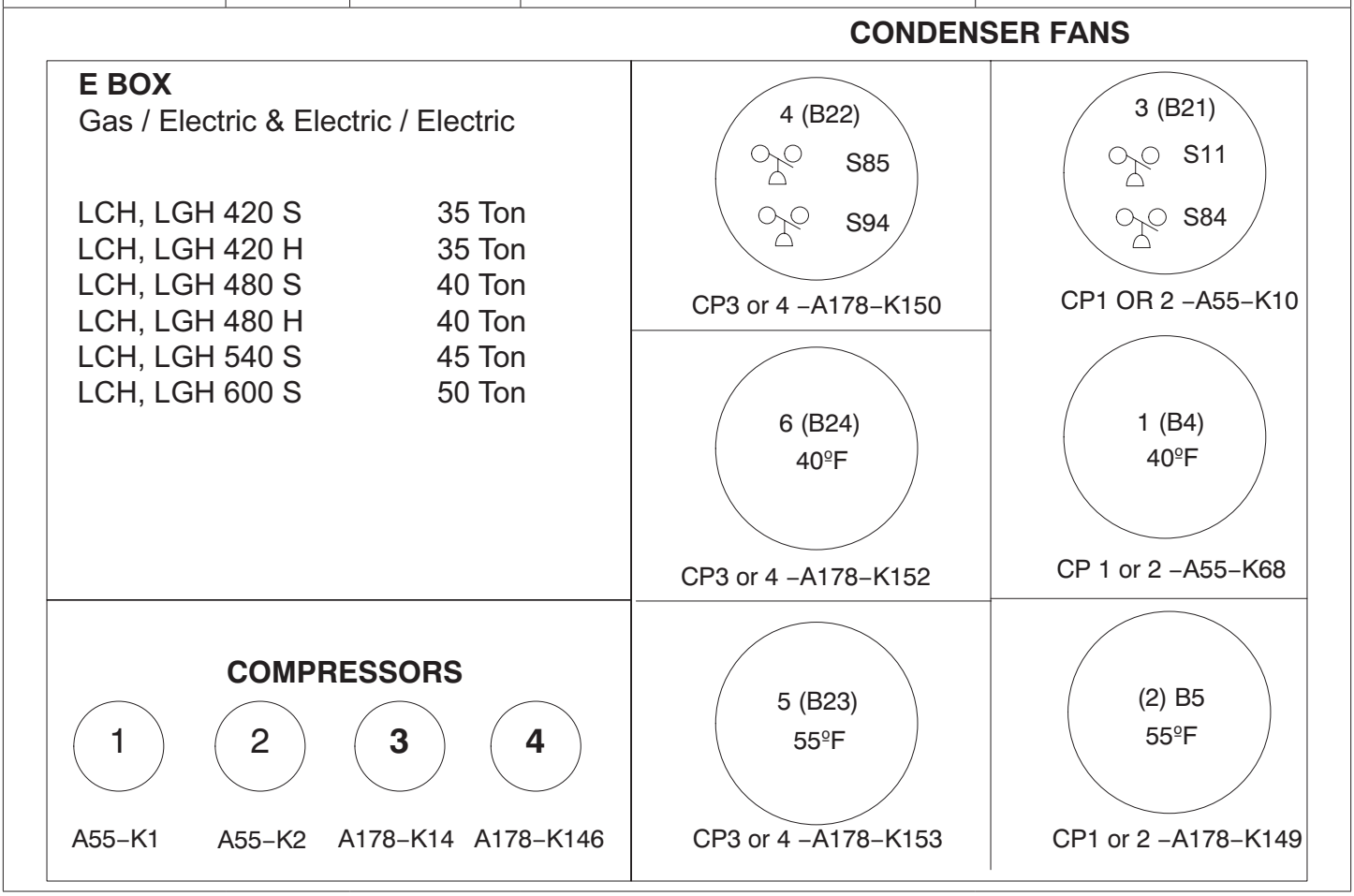

8. Dehumidification Operation

Dehumidification mode is a combination of cooling to dehumidify and heating to maintain space temperature. Supermarket reheat uses gas heat and Humiditrol® units route hot discharge gas to a reheat coil downstream of the evaporator. A gas heat unit is required for Supermarket Reheat and a Humiditrol® unit is required for Humiditrol® Reheat. Economizer operation is disabled during dehumidification operation except when dehumidification mode operation - Parameter 105, option 1 is selected.

NOTE: *Dehumidification operations as referenced here are not supported for Model L Ultra-High Efficiency LCM/LGM036U-74U.*

NOTE: *Humiditrol is not supported for Model L High Efficiency LCM/LGM242H and Model L Units with VAV blowers.*

8.1. Supermarket Reheat Operation Settings

Go to RTU MENU > SETTINGS > RTU OPTIONS > EDIT PARAMETER=105 (DEHUMID MODE)

- **Option 0** - Parameter 105 — No Reheat
- **Option 1** - Parameter 105 — Supermarket Reheat using de-humidistat (wired thermostat mode only)

IMPORTANT

Supermarket Reheat is allowed on electric / gas units only and electric / non-electric units. A de-humidistat will bring on first-stage cooling to dehumidify and a room thermostat will energize heating to maintain indoor temperature. To disable free cooling in this mode, select economizer global mode (figure 5) but do not connect the global input (P297-9). An optional de-humidistat is required. Refer to "Figure 9. Dehumidification Diagram (Parameter 105, Option 1)".

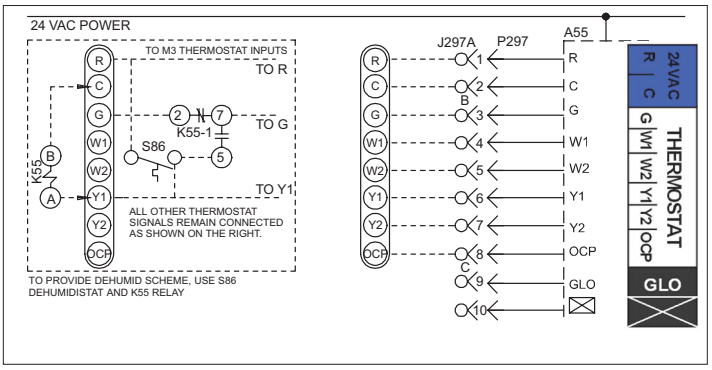

Figure 9. Dehumidification Diagram (Parameter 105, Option 1)

- **Option 2** - Parameter 105 — Supermarket Reheat using Relative Humidity Sensor Control

A relative humidity sensor will bring on first-stage cooling based on the set point set with Parameter 106 or from the L Connection network. First-stage cooling will de-energize when relative humidity drops to Parameter 106 minus Parameter 107. A wired thermostat or room sensor will energize heating to maintain indoor temperature.

An optional relative humidity sensor is required.

Go to RTU MENU > SETTINGS > RTU OPTION > EDIT PARAMETER = 106 or 107 (106 = DEHUMID SETPOINT) and (107 = DEHUMID DEADBAND)

See paragraph 6.3. for further details concerning dehumidification set point.

8.2. Humiditrol Dehumidification Operation — (Humiditrol® Reheat)

A relative humidity sensor reading above set point will energize first-stage compressor(s) and hot gas will be routed to the reheat coil based on the set point set with Parameter 106 or from the L Connection network. The following options show additional conditions which must be met before reheat will be energized:

- Humiditrol dehumidification will de-energize when the relative humidity drops to Parameter 106 minus Parameter 107.

Go to SETTINGS > RTU OPTION > EDIT PARAMETER = 106 or 107 (106 = DEHUMID SETPOINT) and (107 = DEHUMID DEADBAND)

- An optional relative humidity sensor is required.

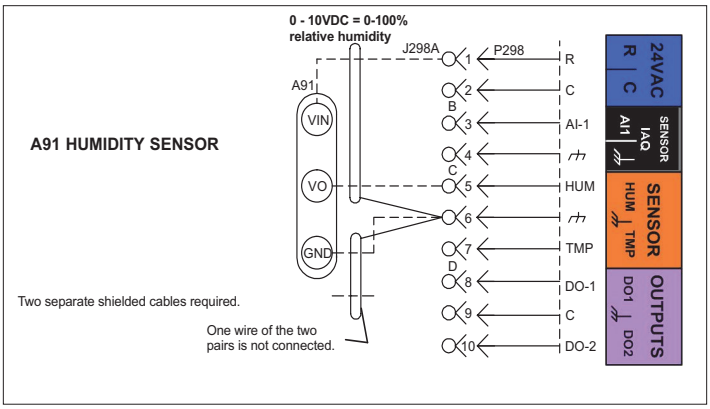

Figure 10. Relative Humidity Sensor Diagram

See paragraph 6.3. for further details concerning dehumidification set point.

Go to RTU MENU > SETTINGS > RTU OPTIONS > EDIT PARAMETER = 105 (DEHUMID MODE)

8.2.1. Option 3 — Humiditrol® Reheat

> Additional conditions to activate Humiditrol® Reheat:

> Blower energized.

> Occupied time period.

> One previous cooling demand must have occurred.

8.2.2. Option 4 — Relative Humidity Measurement

When an optional relative humidity sensor is installed, the relative humidity percentage can be displayed on the M4 unit controller and over the L Connection network via the network control panel or computer software client. *Option 4 is NOT used to control Humiditrol® or Supermarket Reheat.*

8.2.3. Option 5 — Humiditrol® Reheat

Condition is at least one previous cooling demand.

8.2.4. Option 6 — Humiditrol® Reheat

- Additional conditions to activate Humiditrol® Reheat:
- Blower energized.
- Occupied time period.

8.2.5. Option 7 — Humiditrol® Reheat

Humiditrol® reheat with no additional conditions.

8.3. Third Party Digital Input to Control Dehumidification

8.3.1. Method 1:

Go to RTU MENU > SETUP > INSTALL > CONFIGURATION ID1

Set position 1 to **H** for Humiditrol option, then follow the wizard until sensor type option is prompted and select REHEAT DI4.

8.3.2. Method 2:

Go to RTU MENU > SETTINGS > RTU OPTIONS > DEHUMIDIFIER > SELECT DEHUMIDIFIER MODE

For **SENSOR TYPE**, select **REHEAT DIGITAL INPUT 4**.

This method will only work if Configuration ID 1, position 1 is set correctly.

NOTE: *REHEAT DI4 is digital input 4 that is for Humiditrol or third-party products.*

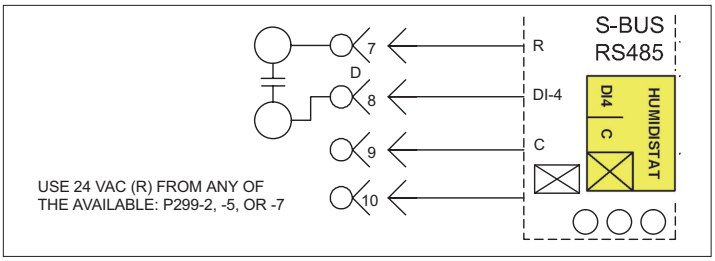

Figure 11. Reheat DI14 Diagram

8.4. Outside Air For Dehumidification

The M4 unit controller has an option that allows "fresh air tempering control" heated outside air to be used to dehumidify when outside air temperature is low.

Go to RTU MENU > SETTINGS > RTU OPTIONS > EDIT PARAMETER = 313 (FAH REHEAT MODE)

When Parameter 313 is set to options 1 - 3, outside air will be used for dehumidification instead of the compressor. Fresh Air Heating starts when the outside air temperature is <= the set point Parameter 168. Additional conditions for operation apply.

Table 26. Outside Air for Dehumidification Conditions

Parameter 313 (Options)	Outside Air Dehumidification Conditions
0	Disabled.
1	Allowed, must be occupied.
2	Allowed, blower must be energized and in occupied mode.
3	Allowed. No conditions apply.

The M4 unit controller will use the gas or electric heat to temper discharge air and the outside air will be used to dehumidify (when there is a dehumidification demand and outside air is cool). Adjust the following settings:

Go to RTU MENU > SETTINGS > RTU OPTIONS > EDIT PARAMETER =

- **166** - Fresh Air Heating Control Reheat Outdoor Air Temperature set point default setting of 45.0°F.
- **167** - Fresh Air Heating Control Reheat Damper position default setting is 40%.
- **168** - Fresh Air Heating Control Reheat Set Point default setting is 40.0°F.

Fresh Air Reheat Mode can be adjusted also through the user interface. The below menu option is only available if a economizer or motorized outside air damper is installed and enabled using Configuration ID 1, position 2. That position needs to be set to one of these options (M, T, G, S or D).

Go to RTU MENU > SETUP > TEST AND BALANCE > DAMPER

NOTE: *There several settings to select in this path before reaching the desired setting FRESH AIR HEATING ENABLE FAH = YES or NO.*

Parameter 313 (FAH REHEAT MODE) can also be used along with Parameter 105 (DEHUMID MODE) options 2 through 7. Do not use option 1.

8.5. Selecting Minimum Low and Minimum High Damper Positions

The following tables reference minimum damper positions which have two possible values for units with MSAV blower option, Parameter 9 = MIN DAMPER LOW BLWR or Parameter 132 = MIN DAMPER POSITION. Which minimum damper position is used depends on a mid-point calculation and actual blower speed.

The mid-point speed is determined as (Min Cool CFM + Max Cool CFM)/2 from those available for the number of compressors installed. Then if actual blower speed is < mid-point Parameter 9 is used, otherwise Parameter 132 used. For units with VAV blower, there is only one minimum damper position (Parameter 132).

8.6. Compressor and Humiditrol Operation

Table 27. Compressor Humiditrol Default Operation (Using 2-Stage Wired Thermostat or Room Sensor)

Demands			Unit Operation			
Thermostat or Zone Sensor	Economizer	Dehumidification	Free Cooling On	CP1 On	Reheat Valve 1 On	Summary
						Idle.
		X		X	X	CP1 Reheat (Reheat Stage 1)
	X	X		X	X	CP1 Reheat (Reheat Stage 1)
1st				X		CP1 Cool
1st	X		X			Free Cool
1st		X		X		CP1 Cool
1st	X	X		X		CP1 Cool
2nd				X		CP1 Cool
2nd	X		X	X		Free Cool, CP1 Cool
2nd		X		X		CP1 Cool
2nd	X	X		X		CP1 Cool
Free cooling operation is only available on units equipped with an economizer. Default dehumidification demand = RH (A91) > 60% (RH set point - Parameter 106). Optional dehumidification demand = P299-8 energized if Parameter 106 is set to 100 (digital demand). Heating demand overrides reheat						

Table 28. Two-Stage Compressor Humiditrol Default Operation

Demands			Condition	Unit Operation			Free Air Damper Econ	Reheat Valve 1
TSTAT	Humidity Sensor	Trigger	OAS	Compr	Outdoor fan	Blower		
G		Unoccupied		OFF	OFF	HIGH	Closed	OFF
G		Occupied		OFF	OFF	HIGH	Minimum	OFF
Y1			Suitable	OFF	OFF	LOW	Modulate up to Maximum	OFF
Y2			Suitable	OFF	OFF	HIGH	Modulate up to Maximum	OFF
Y2		Damper position at maximum position and timer expired.	Suitable	LOW	ON	HIGH	Maximum Open	OFF
Y3			Suitable	HIGH	ON	HIGH	Maximum Open	OFF
Y1			Not Suitable	LOW	ON	LOW	Minimum	OFF
Y2			Not Suitable	HIGH	ON	HIGH	Minimum	OFF
	Dehum			HIGH	ON	LOW	Minimum	ON
Y1	Dehum			HIGH	ON	LOW	Minimum	OFF
Y2	Dehum			HIGH	ON	HIGH	Minimum	OFF
W				OFF	OFF	HIGH	Minimum	OFF

Table 29. Two-Stage Compressor (with variable speed fans) Humiditrol Default Operation

Demands			Condition	Unit Operation			Free Air Damper Econ	Reheat Valve 1
TSTAT	Humidity Sensor	Trigger	OAS	Compressor	Outdoor fan	Blower		
G		Unoccupied		OFF	OFF	HIGH[1]	Closed	OFF
G		Occupied		OFF	OFF	HIGH[1]	Minimum	OFF
Y1			Suitable	OFF	OFF	LOW	Modulate up to Maximum	OFF
Y2			Suitable	OFF	OFF	HIGH	Modulate up to Maximum	OFF
Y2		Damper position at maximum position and timer expired.	Suitable	LOW	LOW	HIGH	Maximum Open	OFF
Y3			Suitable	HIGH	HIGH	HIGH	Maximum Open	OFF
Y1			Not Suitable	LOW	LOW	LOW	Minimum	OFF
Y2			Not Suitable	HIGH	HIGH	HIGH	Minimum	OFF
	Dehum			HIGH	HIGH	LOW	Minimum	ON
Y1	Dehum			HIGH	HIGH	LOW	Minimum	OFF
Y2	Dehum			HIGH	HIGH	HIGH	Minimum	OFF
W				OFF	OFF	HIGH	Minimum	OFF

Model L units run the blower speed dependent on last blower speed demand. Blower setting is related to value of parameter 5 [DIN_SUPPLY_VAV_CONTROL_MODE]:

- 16 = Runs the blower in high speed when occupied and there is no other active demand (room sensor mode only)
- 32 = Runs the blower in high speed when G is active and there is no other active demand (thermostat mode only)

NOTE: *Every TSTAT **Y** demand requires a **G** demand.*

Table 30. Two Compressor Humiditrol Default Operation (using two-stage wired thermostat)

Demands			Condition	Unit Operation						Free Air Damper Econ	Reheat Valve 1
				Compressor		Blower Speeds					
TSTAT	Humidity Sensor	Trigger	OAS	1	2	Vent	Cool C1	Cool C2	Heat		
G		Unoccupied		OFF	OFF	X				Closed	OFF
G		Occupied		OFF	OFF	X				Minimum	OFF
Y1			Suitable	OFF	OFF		X			Modulate up to Maximum	OFF
Y2			Suitable	OFF	OFF			X		Modulate up to Maximum	OFF
Y2		Damper position at maximum position and timer expired.	Suitable	ON	OFF			X		Maximum Open	OFF
Y1			Not Suitable	ON	OFF		X			Minimum	OFF
Y2			Not Suitable	ON	ON			X		Minimum	OFF
	Dehum			ON	OFF			X*		Minimum	ON
Y1	Dehum			ON	ON			X		Minimum	ON
Y2	Dehum			ON	ON			X		Minimum	OFF
W				OFF	OFF				X	Minimum	OFF

Table 31. Two Compressor Humiditrol Default Operation (using three-stage thermostat DDC with ComfortSense 8500)

Demands			Condition	Unit Operation						Free Air Damper Econ	Reheat Valve 1
				Compressor		Blower Speeds					
TSTAT	Humidity Sensor	Trigger	OAS	1	2	Vent	Cool C1	Cool C2	Heat		
G		Unoccupied		OFF	OFF	X				Closed	OFF
G		Occupied		OFF	OFF	X				Minimum	OFF
Y1			Suitable	OFF	OFF		X			Modulate up to Maximum	OFF
Y2			Suitable	OFF	OFF			X		Modulate up to Maximum	OFF
Y2		Damper position at maximum position and timer expired.	Suitable	ON	OFF			X		Maximum Open	OFF
Y3			Suitable	ON	ON			X		Maximum Open	OFF
Y1			Not Suitable	ON	OFF		X			Minimum	OFF
Y2			Not Suitable	ON	ON			X		Minimum	OFF
Y3			Not Suitable	ON	ON			X		Minimum	OFF
	Dehum			ON	OFF			X*		Minimum	ON
Y1	Dehum			ON	ON			X		Minimum	ON
Y2	Dehum			ON	ON			X		Minimum	OFF
Y3	Dehum			ON	ON			X		Minimum	OFF
W				OFF	OFF				X	Minimum	OFF

Table 32. Three Compressor Humiditrol Default Operation (using Two-Stage Thermostat)

Demands			Condition	Unit Operation									Free Air Damper Econ	Reheat Valve 1	Reheat Valve 2
				Compressor			Blower Speeds								
TSTAT	Humidity Sensor	Trigger	OAS	1	2	3	Vent	Cool C1	Cool C2	Cool C3	Cool C4	Heat			
G		Unoccupied		OFF	OFF	OFF	X						Closed	OFF	OFF
G		Occupied		OFF	OFF	OFF	X						Minimum	OFF	OFF
Y1			Suitable	OFF	OFF	OFF			X				Modulate up to Maximum	OFF	OFF
Y2			Suitable	OFF	OFF	OFF				X			Modulate up to Maximum	OFF	OFF
Y2		Damper position at maximum position and timer expired.	Suitable	ON	ON	OFF				X			Maximum	OFF	OFF
Y1			Not Suitable	ON	ON	OFF			X				Minimum	OFF	OFF
Y2			Not Suitable	ON	ON	ON				X			Minimum	OFF	OFF
	Dehum			ON	ON	OFF				X			Minimum	ON	ON

Table 32. Three Compressor Humiditrol Default Operation (using Two-Stage Thermostat)

Demands			Condition	Unit Operation									Free Air Damper Econ	Reheat Valve 1	Reheat Valve 2
				Compressor			Blower Speeds								
TSTAT	Humidity Sensor	Trigger	OAS	1	2	3	Vent	Cool C1	Cool C2	Cool C3	Cool C4	Heat			
Y1	Dehum			ON	ON	ON				X			Minimum	ON	ON
Y2	Dehum			ON	ON	ON				X			Minimum	OFF	OFF
W				OFF	OFF	OFF						X	Minimum	OFF	OFF

Table 33. Three Compressor Humiditrol Default Operation (using three-stage thermostat)

Demands			Condition	Unit Operation									Free Air Damper Econ	Reheat Valve 1	Reheat Valve 2
				Compressor			Blower Speeds								
TSTAT	Humidity Sensor	Trigger	OAS	1	2	3	Vent	Cool C1	Cool C2	Cool C3	Cool C4	Heat			
G		Unoccupied		OFF	OFF	OFF	X						Closed	OFF	OFF
G		Occupied		OFF	OFF	OFF	X						Minimum	OFF	OFF
Y1			Suitable	OFF	OFF	OFF		X					Modulate up to Maximum	OFF	OFF
Y2			Suitable	OFF	OFF	OFF				X			Modulate up to Maximum	OFF	OFF
Y2		Damper position at maximum position and timer expired.	Suitable	ON	OFF	OFF				X			Maximum Open	OFF	OFF
Y3			Suitable	ON	ON	OFF				X			Maximum Open	OFF	OFF
Y1			Not Suitable	ON	OFF	OFF		X					Minimum	OFF	OFF
Y2			Not Suitable	ON	ON	OFF			X				Minimum	OFF	OFF
Y3			Not Suitable	ON	ON	ON				X			Minimum	OFF	OFF
	Dehum			ON	ON	OFF				X			Minimum	ON	ON
Y1	Dehum			ON	ON	ON				X			Minimum	ON	ON
Y2	Dehum			ON	ON	ON				X			Minimum	ON	OFF
Y3	Dehum			ON	ON	ON				X			Minimum	OFF	OFF
W				OFF	OFF	OFF						X	Minimum	OFF	OFF

Table 34. Three Compressor Humiditrol Default Operation (using four-stage thermostat with ComfortSense 8500)

Demands			Condition	Unit Operation									Free Air Damper Econ	Reheat Valve 1	Reheat Valve 2
				Compressor			Blower Speeds								
TSTAT	Humidity Sensor	Trigger	OAS	1	2	3	Vent	Cool C1	Cool C2	Cool C3	Cool C4	Heat			
G		Unoccupied		OFF	OFF	OFF	X						Closed	OFF	OFF
G		Occupied		OFF	OFF	OFF	X						Minimum	OFF	OFF
Y1			Suitable	OFF	OFF	OFF		X					Modulate up to Maximum	OFF	OFF
Y2			Suitable	OFF	OFF	OFF				X			Modulate up to Maximum	OFF	OFF
Y2		Damper position at maximum position and timer expired.	Suitable	ON	OFF	OFF				X			Maximum	OFF	OFF
Y3			Suitable	ON	ON	OFF				X			Maximum	OFF	OFF
Y4			Suitable	ON	ON	ON				X			Maximum	OFF	OFF
Y1			Not Suitable	ON	OFF	OFF		X					Minimum	OFF	OFF
Y2			Not Suitable	ON	ON	OFF			X				Minimum	OFF	OFF
Y3			Not Suitable	ON	ON	ON				X			Minimum	OFF	OFF
Y4			Not Suitable	ON	ON	ON				X			Minimum	OFF	OFF
	Dehum			ON	ON	OFF				X			Minimum	ON	ON
Y1	Dehum			ON	ON	ON				X			Minimum	ON	ON
Y2	Dehum			ON	ON	ON				X			Minimum	ON	OFF
Y3	Dehum			ON	ON	ON				X			Minimum	OFF	OFF
Y4	Dehum			ON	ON	ON				X			Minimum	OFF	OFF
W				OFF	OFF	OFF						X	Minimum	OFF	OFF

Table 35. Four Compressor Humiditrol Default Operation (using two-stage thermostat)

Demands			Condition	Unit Operation										Free Air Damper Econ	Reheat Valve 1	Reheat Valve 2
				Compressor				Blower Speeds								
TSTAT	Humidity Sensor	Trigger	OAS	1	2	3	4	Vent	Cool C1	Cool C2	Cool C3	Cool C4	Heat			
G		Unoccupied		OFF	OFF	OFF	OFF	X						Closed	OFF	OFF
G		Occupied		OFF	OFF	OFF	OFF	X						Minimum	OFF	OFF
Y1			Suitable	OFF	OFF	OFF	OFF			X				Modulate up to Maximum	OFF	OFF
Y2			Suitable	OFF	OFF	OFF	OFF					X		Modulate up to Maximum	OFF	OFF
Y2		Damper position at maximum position and timer expired.	Suitable	ON	ON	OFF	OFF					X		Maximum	OFF	OFF
Y1			Not Suitable	ON	ON	OFF	OFF			X				Minimum	OFF	OFF
Y2			Not Suitable	ON	ON	ON	ON					X		Minimum	OFF	OFF
	Dehum			ON	ON	OFF	OFF					X*		Minimum	ON	ON
Y1	Dehum			ON	ON	ON	ON					X		Minimum	ON	ON
Y2	Dehum			ON	ON	ON	ON					X		Minimum	OFF	OFF
W				OFF	OFF	OFF	OFF						X	Minimum	OFF	OFF

* D box High Efficiency LC, LGM400 and 360H4M during dehumidification and no cooling demand, blower runs at C2 speed instead of C4 speed.

Table 36. Four Compressor Humiditrol Default Operation (using three-stage thermostat)

Demands			Condition	Unit Operation												
				Compressor				Blower Speeds								
TSTAT	Humidity Sensor	Trigger	OAS	1	2	3	4	Vent	Cool C1	Cool C2	Cool C3	Cool C4	Heat	Free Air Damper Econ	Reheat Valve 1	Reheat Valve 2
G		Unoccupied		OFF	OFF	OFF	OFF	X						Closed	OFF	OFF
G		Occupied		OFF	OFF	OFF	OFF	X						Minimum	OFF	OFF
Y1			Suitable	OFF	OFF	OFF	OFF			X				Modulate up to Maximum	OFF	OFF
Y2			Suitable	OFF	OFF	OFF	OFF					X		Modulate up to Maximum	OFF	OFF
Y2		Damper position at maximum position and timer expired.	Suitable	ON	ON	OFF	OFF					X		Maximum	OFF	OFF
Y3			Suitable	ON	ON	ON	OFF					X		Maximum	OFF	OFF
Y1			Not Suitable	ON	ON	OFF	OFF			X					OFF	OFF
Y2			Not Suitable	ON	ON	ON	OFF				X			Minimum	OFF	OFF
Y3			Not Suitable	ON	ON	ON	ON					X		Minimum	OFF	OFF
	Dehum			ON	ON	OFF	OFF					X*		Minimum	ON	ON
Y1	Dehum			ON	ON	ON	ON					X		Minimum	ON	ON
Y2	Dehum			ON	ON	ON	ON					X		Minimum	ON	OFF
Y3	Dehum			ON	ON	ON	ON					X		Minimum	OFF	OFF
W				OFF	OFF	OFF	OFF						X	Minimum	OFF	OFF

*D box High Efficiency LC, LGM400 and 360H4M during dehumidification and no cooling demand, blower runs at C2 speed instead of C4 speed.

Table 37. Four-Compressor Humiditrol Default Operation (using four-stage thermostat and DDC with Comfortsense 8500)

Demands			Condition	Unit Operation										Free Air Damper Econ	Reheat Valve 1	Reheat Valve 2
				Compressor				Blower Speeds								
TSTAT	Humidity Sensor	Trigger	OAS	1	2	3	4	Vent	Cool C1	Cool C2	Cool C3	Cool C4	Heat			
G		UNOCP		OFF	OFF	OFF	OFF	X						Closed	OFF	OFF
G		OCP		OFF	OFF	OFF	OFF	X						Minimum	OFF	OFF
Y1			Suitable	OFF	OFF	OFF	OFF		X					Modulate up to Maximum	OFF	OFF
Y2			Suitable	OFF	OFF	OFF	OFF					X		Modulate up to Maximum	OFF	OFF
Y2		Damper position at maximum position and timer expired,	Suitable	ON	OFF	OFF	OFF					X		Maximum	OFF	OFF
Y3			Suitable	ON	ON	OFF	OFF					X		Maximum	OFF	OFF
Y4			Suitable	ON	ON	ON	ON					X		Maximum	OFF	OFF
Y1			Not Suitable	ON	OFF	OFF	OFF		X					Minimum	OFF	OFF
Y2			Not Suitable	ON	ON	OFF	OFF			X				Minimum	OFF	OFF
Y3			Not Suitable	ON	ON	ON	OFF				X			Minimum	OFF	OFF
Y4			Not Suitable	ON	ON	ON	ON					X		Minimum	OFF	OFF
	Dehum			ON	ON	OFF	OFF					X*		Minimum	ON	ON
Y1	Dehum			ON	ON	ON	OFF					X		Minimum	ON	ON
Y2	Dehum			ON	ON	ON	ON					X		Minimum	ON	ON
Y3	Dehum			ON	ON	ON	ON					X		Minimum	ON	OFF
Y4	Dehum			ON	ON	ON	ON					X		Minimum	OFF	OFF
W				OFF	OFF	OFF	OFF						X	Minimum	OFF	OFF

Model L High Efficiency LCM/LGM420-600, during dehumidification and no cooling demand, blower runs at C1 speed instead of C4 speed.

* D box High Efficiency LC, LGM400 and 360H4M during dehumidification and no cooling demand, blower runs at C2 speed instead of C4 speed.

9. Increased Dehumidification Operation - Model L Ultra-High Efficiency (3- to 6-ton)

Model L Ultra-High Efficiency 3 to 6-ton units do not support humidity control as described in the previous section, instead they use Increased dehumidification for these models.

9.1. Increased Dehumidification in Wired Thermostat Mode

Increased Dehumidification mode can be activated by the M4 unit controller only when a cooling demand is present. To remove humidity in the space, the blower runs at 70% of the normal cooling speed until the humidity demand is satisfied.

9.2. Increased Dehumidification in Room Sensor Mode

When in Increased Dehumidification mode, the unit operates the compressor, indoor blower, and outdoor fan with full variability to more accurately and efficiently match the humidity load in the space.

Even though Increased dehumidification mode shifts the emphasis of unit operation from cooling to dehumidifying, some cooling of the air does take place as a side effect of the refrigeration system operating. Because the air is cooled it is possible to lower the temperature of the space below the space temperature set point while dehumidifying. This is known as “over-cooling” and is accounted for in the M4 unit controller by having an over-cool limit that is adjustable from 0°F - 6°F, default 2°F.

The range for over-cool limit is also limited by Parameter 152, Automatic Changeover Deadband and the heating set point. Therefore, to set over cool limit to a value higher than two, user should first change Parameter 152 to “desired over-cool limit + 2”. Effective over-cool set point will be >= heating set point + heating deadband + 1.

Set over cool limit to zero to avoid overcooling.

9.2.1. Increased Dehumidification without a Cooling Demand

Increased dehumidification mode can be activated by the unit controller without a cooling demand being present. This is possible when the space humidity is higher than the space humidity set point but the space temperature is equal to or lower than the space temperature set point. In this scenario the M4 unit controller will operate the refrigeration system based on the humidity demand; allowing over-cooling of the space based on the over-cool limit set point.

To provide additional humidity removal when no cooling demand is present, the M4 unit controller operates the indoor blower based on the over-cool limit set point and operates the compressor based on a programmed discharge air temperature set point designed for optimal moisture removal from the air. In this way, the indoor blower and compressor work together to achieve a higher latent capacity resulting in lower moisture content in the conditioned space.

The M4 unit controller will cease unit operation in increased dehumidification mode if either the humidity demand in the space is satisfied or the over-cool limit set point is satisfied, whichever comes first.

9.2.2. Increase Dehumidification with a Cooling Demand.

Increased dehumidification mode can also be activated by the M4 unit controller while a cooling demand is present. This is possible when the space humidity rises above the space humidity set point while the unit is already operating due to the space temperature being higher than the space temperature set point. In this scenario the M4 unit controller must determine if the cooling demand or the dehumidification demand is more urgent. Recall that, during a cooling demand, the unit controller modulates the blower based off the space temperature set point. Therefore, by realizing the speed of the indoor blower, the unit controller can determine the cooling demand of the space and decide if it is more urgent than the dehumidification demand. From the graph below one can see that the cooling demand is given precedence by the unit controller when the indoor blower speed is above 90% but the increased dehumidification mode demand is given precedence by the unit controller when the indoor blower speed is below 85%.

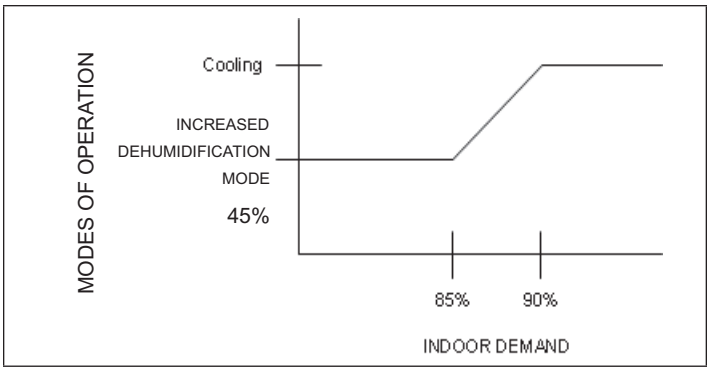

Figure 12. Modes of Operation

To provide additional humidity removal when increased dehumidification mode is given precedence, the unit controller operates the indoor blower based on the space temperature set point and operates the compressor based on a programmed discharge air temperature designed for optimal moisture removal from the air. The unit controller will cease unit operation in increased dehumidification mode if either the humidity demand in the space is satisfied or the over-cool limit set point is satisfied, whichever comes first. In the instance where the humidity demand is satisfied but the space temperature is still above the space temperature set point, the unit controller will transition unit operation back to cooling mode to satisfy the cooling demand.

9.3. How to Enable or Disable Increased Dehumidification Mode

Go the RTU MENU > SETUP > INSTALL.

Follow the prompts until you reach **MODEL NUMBER**. Enter the Ultra-High Efficiency model number here. Touch **SAVE** to proceed. Continue through the various configuration problems until you reach **DEHUM SENSOR TYPE**. By default it is set to **DISABLED**. **ENABLED** and select one of the following increased dehumidification mode sensor types:

- **LOCAL SENSOR** > DEHUMID SETPOINT > DEHUMID DEADBAND > OVERCOOL LIMIT
- **NETWORK SENSOR** > DEHUMID SETPOINT > DEHUMID DEADBAND > OVERCOOL LIMIT
- **REHEAT DI4**

10. Power Exhaust Operation

10.1. Enabling Feature

The M4 unit controller configuration has to match the power exhaust equipment installed in the roof top unit. To enable the Power Exhaust feature in the software, set Configuration ID 1 position 3 to whichever is applicable.

- **N** - No power exhaust installed
- **S** - Single stage power exhaust
- **D** - Dual stage power exhaust.
- **V** - VFD power exhaust

10.2. Control

Configuration ID1 position 4 indicates how the power exhaust is controlled.

- **A** - Power exhaust is operated based on damper position.
- **B** - Power exhaust is operated based on pressure switches (S37 and/or S39).
- **C** - Power exhaust is operated based on pressure transducer (A34).

Parameter 401 determines when the power exhaust is enabled.

- **0** - On when blower is energized
- **1** - On always
- **2** - On during occupied period
- **3** - On if digital input on GP3 is energized.

Table 38. Power Exhaust Configurations

Operation	Configuration ID 1 Setup
Single-stage power exhaust when pressure switches S37 and S39 are being used. ***NOTE:*** *Only S37 is used for single-stage.*	Setup the config ID 1 to this value: NTSBNNNNOutput: on/off. Input: sensor values none
Single-stage power exhaust when A34 sensor is being used.	Setup config ID 1 to this value: NTSCNNNNOutput: on/off Input: sensor A34
Dual-stage power exhaust when S37 and S39 switches are used.	Setup the config ID 1 to this value: NTDBNNNNOutput: on/off Input: none
Dual-stage power exhaust when A34 sensor is being used.	Setup config ID 1 to this value: NTDCNNNN. Output: on/off Input: A34 value
VFD power exhaust when A34 sensor is being used.	Setup config ID 1 to this value: NTVCNNNN Output: %value Input: A34 value

Operation Based on Various Options

Table 39. Configuration ID 1 Character Position 4 - Power Exhaust Control

	Damper Position 'A'	Pressure Switch S37 & S39 (opt) 'B'	Pressure Sensor A34 'C'
Single Stage 'S'	215 and 216 See Note 1	Only S37 switch used. See Note 2	217 and 218 See Note 3
Dual Stage 'D'	215, 216, 219, 220, 223 and 224 See Note 4	223 and 224 See Note 5	217, 218, 221, 222, 223 and 224. See Note 6
Variable Speed VFD 'V'	Not Supported	Not Supported	217, 402, 405, 406, 407, 408, 409, 410 and 411. See Note 7

Note 1 The power exhaust will be energized when enabled and the fresh air damper position reaches 50% travel (Parameter 215) when the blower is operating. The exhaust will de-energize when the damper position decreases 20% (Parameter 216) less than the set point or when the blower is de-energized.

Note 2 The power exhaust will be energized when enabled and the building pressure switch S37 closes.

Note 3 The power exhaust will be energized when enabled and the pressure is at or above Parameter 217. Power exhaust will de-energize when the pressure decreases by the dead-band set with Parameter 218.

Note 4 Stage one of power exhaust will be energized when enabled and the fresh air damper position reaches 50% Travel (Parameter 215). Stage two is energized when the fresh air damper position reaches (Parameter 219). Stage two will de-energize when the damper position drops below (set point - deadband). Stage 1 will not de-energize until stage two has been de-energized for 100 Seconds (Parameter 224).

Note 5 Stage one of power exhaust will be energized when enabled and the building pressure switch S37 closes. Stage two will be energized when the building pressure switch S39 closes. Stage 1 will not de-energize until stage two has been de-energized for 100 Seconds (Parameter 224).

Note 6 Stage one of power exhaust will be energized when enabled and the building pressure exceeds stage 1 setpoint (Parameter 217). Stage two is energized when the building pressure exceeds stage 2 setpoint (Parameter 221). Stage two will de-energize when the building pressure drops below (set point - deadband). Stage 1 will not de-energize until stage two has been de-energized for 100 Seconds (Parameter 224).

Note 7 Units equipped with a power exhaust VFD vary the speed of the blower to maintain a building pressure set point (Parameter 217, with a default setting of 0.05 w.c.). If low speed cycling is enabled by setting Parameter 402, then, if exhaust operates at minimum speed for a time period of 30 seconds, it will de-energize for a minimum time period of 30 seconds. Exhaust will energize when feedback exceeds the set point (Parameter 217) by 10%.

11. Economizer

11.1. General

The economizer, when configured, controls:

- Damper position, which determines how much outdoor air is used to meet free cooling or indoor air quality requirements, and
- Optional power exhaust fans.

On a cooling demand, outdoor air is used for free cooling instead of first-stage compressor(s) when outdoor air is suitable.

11.2. Enabling Economizer and Settings

To enable the economizer go to **RTU MENU** > **SETUP > INSTALL** and go through the wizard. Configuration ID 1, position 2 will need to be set to the applicable type of economizer. Valid types are as indicated below:

- **M** = Motorized Outdoor Air Damper Only
- **T** = Economizer - Temperature (NOTE: Used for both set point and offset temperature control.)
- **G** = Economizer - Global
- **S** = Economizer - Single Enthalpy
- **D** = Economizer - Dual Enthalpy

The following options are available depending on economizer set above. These settings are available through the main menu at:

Go to SETUP > TEST & BALANCE > DAMPER.

11.3. Damper Feedback Calibration

Use the following procedure to perform a damper feedback calibration.

Go to RTU MENU > SETUP > TEST & BALANCE > DAMPER > IS DAMPER CLOSED?

- This drives the damper to the fully closed position. Visually inspect that the damper has stopped moving in the closed position, and answer **YES** to calibrate damper closed position feedback value.
- Then the next screen will ask **IS DMPR FULL OPEN**?. This will drive the damper to fully open position. Visually inspect that the damper has stopped moving in the full open position, and answer **YES** to calibrate damper full open position feedback value.

11.4. Damper Operation During Free Cooling

These are operating profile options for the economizer damper (Parameter 164 - ECONOMIZER PROFILE) during free cooling when any compressor is on and can be selected as follows:

- **Option 0** - Damper continues to modulate while compressors are on, but the effect of mechanical cooling may force the damper closed to its minimum position. After compressor starts, the free cooling set point is lowered to fixed temperature setting of 45°F.

NOTE: *Option 0 is not supported on Model L Ultra-High Efficiency 3- to 6-ton units.*

- **Option 1** - Damper opens to its maximum open position (Parameter 131 - FREE CL MAX DAMPER) when any compressors start.

NOTE: *When using Option 1 and after the compressor is stopped, the M4 will resume damper modulation.*

- **Option 2** - Is as follows:
  - > Holds off compressor on Y2 call until damper has modulated to maximum position (Parameter 131 - FREE CL MAX DAMPER) for three minutes.
  - > After three minutes, the compressor starts and the free cooling set point is lowered to 45°F. Damper is not locked at maximum open while compressor is on, but modulates to maintain 45°F discharge air temperature.
  - > When Y2 is satisfied, compressor goes off and free cooling set point is restored to 55°F (Parameter 159 - FREE COOL SUPPLY SP).
- **Option 3** - Same as Option 2, but with a 10 minute delay instead of a three minute delay.

11.5. Free Cooling Compressor Lockout Mode and Low Ambient Set Point

Go to RTU MENU > SETTINGS > RTU OPTION > EDIT PARAMETER = 285 (FRCL COMP LCKOUT MD). Default value is 2. Range is 0 to 2.

- 0 = Disable compressor lockout
- 1 = Lockout compressor if outdoor air is suitable regardless of outdoor air temperature.
- 2 = Lockout compressor if outdoor air temperature is below Parameter 108 setting and outdoor air is suitable (default).

Go to RTU MENU > SETTINGS > RTU OPTION > EDIT PARAMETER = 108 (FREE LO AMB LCKT SP).

Default value is 55.0°F. Range is 45.0 to 80.0°F.

11.6. Outdoor Air Suitable for Free Cooling

The M4 unit controller displays the outdoor air suitability information on the status screen.

The appropriate sensors are provided when the economizer is factory-configured. When the economizer is field-installed and configured, the single or dual enthalpy modes require additional field-provided sensor(s).

11.7. Enthalpy Set Point

This setting pertains to the single enthalpy free cooling mode only. The M4 unit controller will enable free cooling when outdoor air enthalpy (A7) is less than the enthalpy set point (Parameter 162 - ECON FREECL ENTH SP). Figure 8 shows the approximate enthalpy sensor output at various temperatures and percentage of relative humidity.

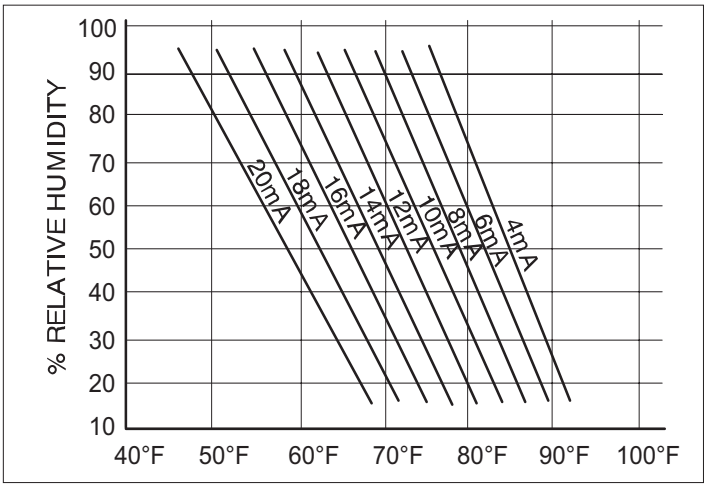

Figure 13. Enthalpy Sensor Output Current Honeywell C7400

11.8. Free Cooling Damper Maximum Position

Damper maximum position for free cooling is by default set to 100%. To modify this settings, use the following path:

RTU MENU > SETTINGS > RTU OPTION > EDIT PARAMETER - 131 (FREE CL MAX DAMPER)

11.9. Minimum Damper Position

Use the following menu path to modify the minimum damper positions for both high and low operations.

RTU MENU > SETUP > TEST & BALANCE > DAMPER > MIN DAMPER POSITION BLOWER ON HIGH = .%

RTU MENU > SETUP > TEST & BALANCE > DAMPER > MIN DAMPER POSITION BLOWER ON LOW = .%

11.10. Closing Damper and Calibration

Use the following menu path to close the damper and confirm whether the M4 unit controller has calibrated the damper position feed back to be used later on.

Go to RTU MENU > SETUP > TEST & BALANCE > DAMPER > DAMPER FDBK CALIB IS DAMPER CLOSED? = NO or YES

The Installer should visually inspect the damper to ensure that it is closed. If the installer confirms that the damper is indeed closed.

11.11. Motorized Outdoor Air Damper

Set damper position according to “Minimum Damper Position” section 8.8. For normal operation, make sure the motorized outdoor air damper is set correctly in Configuration ID 1, position 2 needs to be set to M. The damper will open to the specified position during the occupied time period and close during the unoccupied time period.

NOTE: *When equipped with Motorized Outdoor Air Damper, M4 unit controller provides only Demand Control Ventilation. Free Cooling/Economizer function is not available.*

11.12. Economizer Checkout

The following checkout procedures are completed with unit energized. Step 1 will determine whether the economizer is allowing full damper travel. Use step 2 when the damper does not respond to step 1.

Steps 3, 4, 5, and 6 checkout the operating modes; checkout only the mode that applies to the unit being worked on.

CAUTION

Power exhaust fans will be functional. To prevent operation of power exhaust fans, disconnect power to unit and then PED jack/plug P/J18.

Step 1. ECONOMIZER OUTPUT VOLTAGE

The M4 unit controller monitors P262 (DPOS) and operates as reference in “19.3.5. Damper Diagnostics” on page 56.

Go to RTU MENU > SERVICE > COMPONENT TEST > DAMPER > POSITION > DAMPER POSITION ACTUAL: 0.0%

- The motor will slowly modulate to the closed position.
- Change DAMPER POSITION ACTUAL to 100.0%. The motor will slowly modulate to the fully opened position.
- If the motor does not respond, go to step 2. If the motor does respond properly, go to the appropriate mode of operation checkout.

Step 2. OUTPUT VOLTAGE CHECK

Go to RTU MENU > SERVICE > COMPONENT TEST > DAMPER > POSITION > DAMPER POSITION ACTUAL: 0.0%

- Adjust the DAMPER POSITION ACTUAL to 0.0% position.
- Measure the voltage on P262 between pin 3 (VOT damper control) and pin 2 (GND) using pin 1 as common. Voltage should read approximately 2 VDC.
- Adjust the DAMPER POSITION ACTUAL to 100.0% position.

NOTE: *Allow approximately 90 seconds for actuator to react.*

- Measure the voltage between P262 between pin 3 (VOT damper control) and pin 2 (GND) using pin 1 as common. Voltage should read approximately 10 volts DC. If not, check wiring and trouble shoot system.

Step 3. SINGLE ENTHALPY OPERATION (ODE)

In the single enthalpy mode, dampers open for free cooling when the outdoor enthalpy is less than the enthalpy set point (Parameter 162 - ECON FREECL ENTH SP); dampers will try to modulate discharge air temperature (RT6) to (Parameter 159 - FREE COOL SUPPLY SP) which has a default setting of 55.0°F (13°C).

- Go to **RTU MENU** > **SETUP** > **INSTALL** > press **SAVE** until you get to the Configuration ID 1, position 2 needs to be set to S for Economizer Single Enthalpy and press SAVE.
- To simulate low outdoor enthalpy. Disconnect A7 outdoor enthalpy sensor jack/plugs J/P104. Connect a 750 ohm resistor across plug J104-1 and J104-2. J104 is located in the filter access area.
- Check all connections and wiring between J104 and the control.

Step 4. DUAL ENTHALPY MODE OF OPERATION

In dual enthalpy mode, dampers open for free cooling when the outdoor air enthalpy is lower than the return air enthalpy by difference value of (Parameter 163 - ECN FRCL ENTH OFFST); dampers will modulate discharge air temperature (RT6) to (Parameter 159 - FREE COOL SUPPLY SP) which has a default setting of 55.0°F (13°C).

- Go to **RTU MENU** > **SETUP > INSTALL** > press **SAVE** until you get to the Configuration ID 1 position 2 needs to be set to D for Economizer Dual Enthalpy and press SAVE if performing an economizer field-install.
- Use two resistors to simulate outdoor air enthalpy suitable.
  - > Disconnect A62 return air enthalpy sensor jack/plug J/P105. Place a 1500 ohm resistor between J105-1 and J105-3. J/P105 is located in the filter access area.
  - > Disconnect A7 outdoor enthalpy sensor jack/plugs J/P104. Connect a 750 ohm resistor across J104-1 and J104-2.

Step 5. ALL TEMPERATURE MODES OF OPERATION

In the Economizer – Temperature mode, the damper opens for free cooling when the outdoor air temperature is:

- Less than return air temperature by at least a difference of (Parameter 161 - ECON FRCL TMP OFFST) if Temperature Offset mode is selected
- Less than (Parameter 160 - ECON FREECL TEMP SP)

In all modes, dampers will try to modulate discharge air temperature (RT6) to (Parameter 159 - FREE COOL SUPPLY SP) which has a default setting of 55.0°F (13°C).

Select a resistor value that corresponds to a temperature (see “Table 40. TMP Mode Resistor Values”):

- Locate RT17 sensor in unit. Disconnect 1/4” quick connect terminals on wires leading from sensor.
- Jumper RT17 wires leading back to control with the appropriate resistor.
- Check all connections and wiring between RT17 and the M4 unit controller, and between RT16 and the M4 unit controller.

Table 40. TMP Mode Resistor Values

Temp. °F (°C)	Size Resistor	Temp. °F (°C)	Size Resistor	Temp. °F (°C)	Size Resistor	Temp. °F (°C)	Size Resistor
30 (-1)	34,566	50 (10)	19,904	70 (21)	11,884	90 (32)	7,332
40 (4)	26,106	60 (16)	15,313	80 (27)	9,298	100 (38)	5,826

Step 6. GLOBAL MODULATING (GLO) MODE OF OPERATION

In the GLO (modulating) mode, dampers modulate open for free cooling when the global input is energized; dampers will try to modulate discharge air temperature (RT6) to (Parameter 159 - FREE COOL SUPPLY SP) which has a default setting of 55.0°F (13°C).

NOTE: *The global input turns on the blower.*

- Set global mode using the Configuration ID 1, position 2, and set to character G.
- Connect a jumper between A55_P297-1 (24VAC) and A55_P297-9 (global). The blower will be energized and the damper will slowly open if discharge air temperature (RT6) is greater than (Parameter 159 - FREE COOL SUPPLY SP) which has a default setting of 55.0°F (13°C).
- Disconnect 24VAC to A55_P297-9. The blower will turn off and the damper will close.
- If the damper does not actuate check all connections and wiring between P262A and B.

Step 7. ENTHALPY SENSOR OPERATION (A7 and A62)

- Connect a direct current ammeter as shown in the following figure to measure current output of A7 or A62.

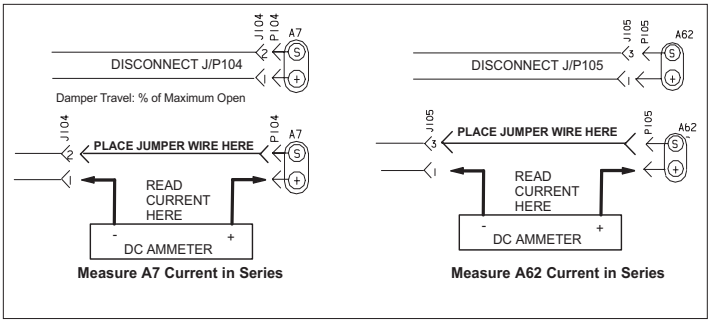

Figure 14. Measure A7 and A62 Current in Series

NOTE: *If Enthalpy Sensors are configured, current sensor reading by M4 controller can be verified on User interface:*

- The reading will be between 4 and 20 ma. Depending on outdoor temperature and humidity.

Go to RTU MENU > DATA > SYSTEM DATA/SENSOR /OUTPUT > INPUT AND OUTPUTS > LOCAL INPUTS > SENSORS (scroll down to IE: x.x mA and OE: x.x mA)

- If the meter reads zero, check sensor wiring harness for continuity and/or check polarity of sensor wiring.

12. Demand Control Ventilation (DCV)

12.1. General

A field-provided and installed indoor air quality (IAQ) sensor can be used with the modulating economizer or motorized outdoor air damper (OADM) to control carbon dioxide levels in the conditioned space. The carbon dioxide level in a space is an indicator of the number of people occupying a room. As the carbon dioxide level rises (indicating the occupancy of a room has increased), dampers modulate open - regardless of outdoor air suitability. Likewise, as the carbon dioxide level falls (indicating the occupancy has decreased), dampers modulate further closed.

Standard economizer installations have a minimum fresh air ventilation requirement based on maximum room occupancy. With standard economizer use, the amount of air required for maximum room occupancy is heated or cooled with each heating or cooling cycle. IAQ installations use the maximum amount of required ventilation air only with maximum room occupancy; less outdoor air needs to be heated or cooled when fewer people are in the conditioned space.

If the economizer is operating in the free cooling mode and the indoor air quality control requires the damper to open further, the indoor air quality demand will override the free cooling demand.

The IAQ function is not energized during the unoccupied or night time period.

NOTE: *The IAQ sensor may also be used with systems containing a motorized outdoor air damper.*

12.2. Default Operation

The M4 unit controller has a 0-10 VDC indoor air quality input for a standard 0 - 2000 ppm carbon dioxide sensor. The economizer starts opening at a carbon dioxide level of 700 ppm (default) (start open set point) and reaches full open at a carbon dioxide level of 1200 ppm (default) (full open set point).

The damper opens to a default position of 50% (see Parameter 117). Determine damper travel position using the following formula.

$$\frac{\text{\% Damper Travel = carbon dioxide ppm - Start Open ppm}}{5}$$

EXAMPLE: *At a carbon dioxide level of 750ppm, the damper will be approximately 50% open:*

$$\frac{\text{\% Damper Travel = 750-500 = 50\%}}{5}$$

Use the applicable menu interface to read carbon dioxide ppm.

RTU MENU > DATA > SYSTEM DATA/SENSOR /OUTPUT > INPUT AND OUTPUTS > NETWORK INPUTS > SENSORS > C02

RTU MENU > DATA > SYSTEM DATA/SENSOR /OUTPUT > INPUT AND OUTPUTS > NETWORK INPUTS > SENSORS SENSORS > NETWORK > C02

"Figure 15. Default Demand Control Ventilation (DCV) Operation" shows default or proportional operation.

12.3. Maximum and Minimum Demand Control Ventilation Damper Settings

Maximum position is set using the following menu path:

Go to RTU MENU > SETTINGS > RTU OPTIONS > DAMPER (then a series of questions)

Options are:

- DEMAND CONTROL VENT > DAMPER START OPEN = XXXX PPM
- DEMAND CONTROL VENT > DAMPER FULL OPEN = XXXX PPM
- DEMAND CONTROL VENT > DAMPER MAX OA CFM = X CFM (only visible if Configuration ID 1, position 2 is set correctly).
- DEMAND CONTROL VENT > DAMPER MAX OPENING = XXX.X %.

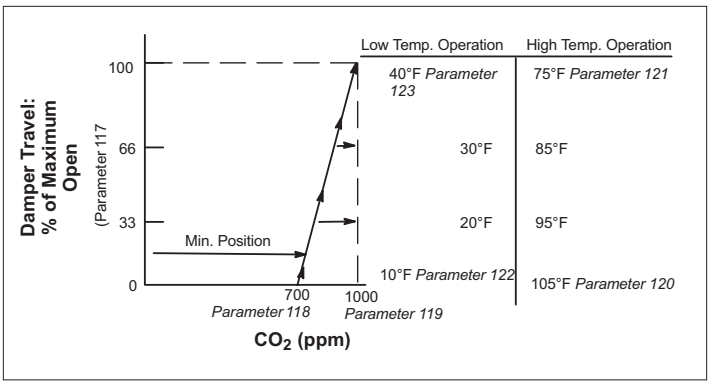

Figure 15. Default Demand Control Ventilation (DCV) Operation

12.4. Parameter Adjustments

Default indoor air quality economizer operation is based on common or average applications. Adjustments may be made to the indoor air quality Parameters to alter operation or meet required specifications. Use the user interface to change Parameter 117 through 123.

Go to RTU MENU SETTINGS > RTU OPTIONS > EDIT PARAMETER = 134

Select a demand control ventilation mode with Parameter 134. Modes 3 and 4 will bring on the unit blower when demand control ventilation calls for maximum damper open, and returns to auto-blower when demand control ventilation damper returns to 0. The other modes only operate when the unit blower is on, but will not bring it on themselves.

Some applications require a different carbon dioxide set point range than default settings. Damper start open (Parameter 118) and full open (Parameter 119) carbon dioxide set points may be adjusted from 0 to 2000 ppm,

Use the following formula to determine damper travel.

NOTE: *When changing carbon dioxide set point range, "start open" set point should be less than "full-open" set point.*

% Damper Travel = carbon dioxide ppm - Start Open ppm X Max Open (Parameter 117) Full Open - Start Open

Full Open - Start Open

EXAMPLE: *An application requires the dampers open at 800 CO2 ppm and reach full open at 1200. If the carbon dioxide level in the space reads 1000 ppm, calculate the damper percent open as follows.*

% Damper Travel = 1000 - 800 or 200 or .5 = 0.5 x 100 = 50%

1200 - 800 400

12.4.1. Set Point Control Option

Set point control mode is commonly used in areas with high occupancy and frequent change out such as classrooms or conference rooms.

In applications requiring this on/off damper response to carbon dioxide levels, set the start open (Parameter 118 - DCV DAMP START OPEN) set point higher than the full open (Parameter 119 - DCV DAMP FULL OPEN) set point. The dampers will drive to fully-open position immediately. Figure 11 shows the set point control option.

Change Parameters 122 and 123 to set the minimum outdoor temperature limits. Change Parameters 120 and 121 to set the maximum temperature limits.

IMPORTANT

Mixed air temperatures less than 45°F (7°C) on units with an aluminized heat exchanger or less than 30°F (-1°C) on stainless steel heat exchangers will void the manufacturer's warranty.

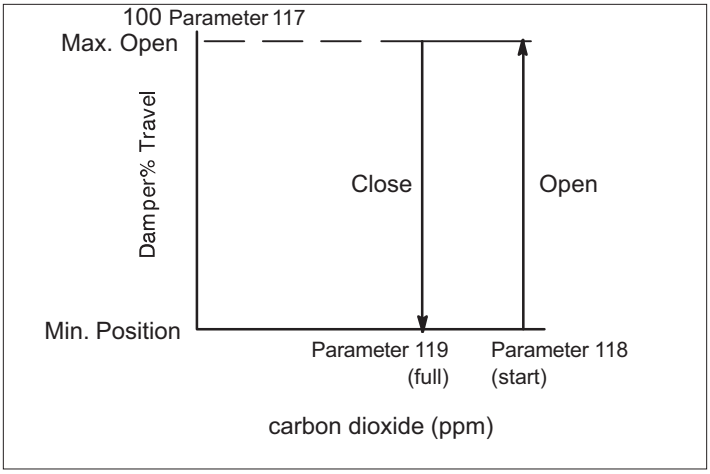

Figure 16. Set point Control Indoor Air Quality Option

12.4.2. Determining Indoor Air Quality Inputs

Go to RTU MENU >DATA> IN/OUTPUTS > SENSORS

13. Outdoor Air Control (OAC)

This feature is available on all models except Strategos models and Model L® 3- to 6-ton units with advanced airflow control enabled. Outdoor air control is an alternative to demand control ventilation for modulating the outdoor air damper in order to hold a constant outdoor airflow. Outdoor Air Control mode requires an installed and functional A24 Air Flow Velocity Sensor (96M09) connected to the M4 unit controller IAQ input (P298-3).

NOTE: *There are two versions of the A24 Air Flow Velocity Sensor, the original and latest version. See "Table 41. A24 Velocity Sensor Settings (100501-01)" and "Table 42. A24 Velocity Sensor Settings (100501-02)".*

In OAC mode, the M4 unit controller closes the damper as voltage increases to maintain a constant amount of fresh air. The sensor will read 10VDC at maximum flow and 0VDC at minimum flow.

NOTE: *When the blower is off, the outdoor air damper will always be closed.*

a. The OAC CFM option allows variable air volume units to minimize the effect of supply-fan speed modifications and maintains a constant outdoor air CFM level. The A24 sensor will need to be located in the outdoor air section of the unit. There it measures the outdoor air velocity and relays the information to the M4 unit controller. Based on the velocity information, the M4 unit controller automatically adjusts the economizer position, offsetting the supply-fan speed modifications and maintaining a constant outdoor air CFM level.

b. To enable the outdoor air control feature, from the M4 unit controller interface.

Go to RTU MENU > SETUP > INSTALL.

Navigate through the various settings until the screen for Configuration ID 1 appears. Position 8 will need to be set to one of the following options which is dependent on the version of the sensor installed:

Table 41. A24 Velocity Sensor Settings (100501-01)

Configuration ID 1, Position 8	Speed	Description	Velocity
L	Low	Outdoor air control installed with A24 sensor set for low, medium or high ranges.	0 - 1000 ft / min.
M	Medium		0 - 1500 ft / min.
H	High		0 - 2000 ft / min.

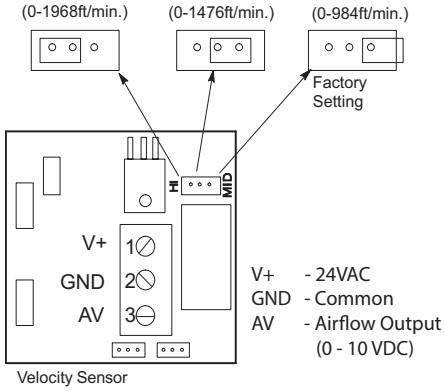

NOTE: *The A24 velocity sensor has 0-10VDC output range that corresponds to the three range settings reference above. The A24 sensor (100501-01) is factory set for 0 - 1000 ft/min. If a higher velocity is required, the A24 sensor jumper will also need to be changed.*

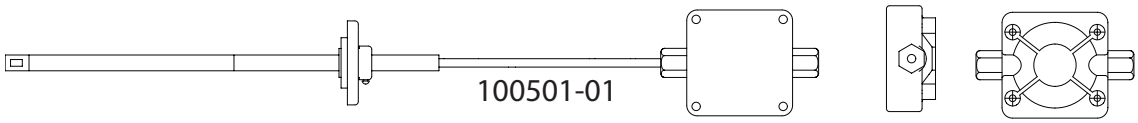

Table 42. A24 Velocity Sensor Settings (100501-02)

Configuration ID 1, Position 8	Speed	Description	Velocity
H	High	• Outdoor air control installed with A24 sensor set for high only. • A24 sensor must be set to low when Configuration ID 1, position 8 is set to "H". • This is the only combination of CONFIGURATION ID 1 and sensor settings that can be used with the 100501-02 sensor.	0 - 2000 ft / min.

OUTDOOR AIR VELOCITY SENSOR (A24) JUMPER SETTINGS

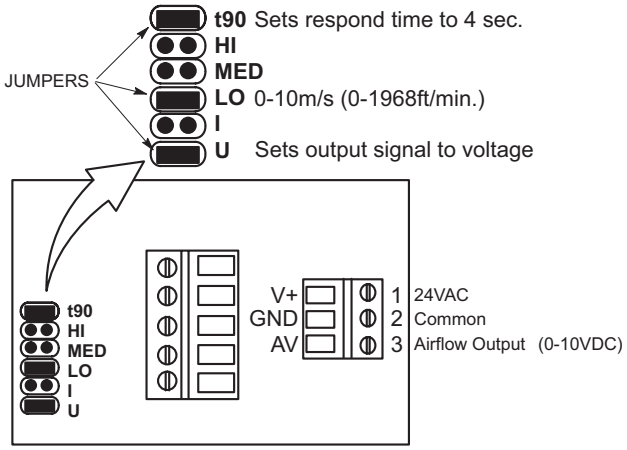

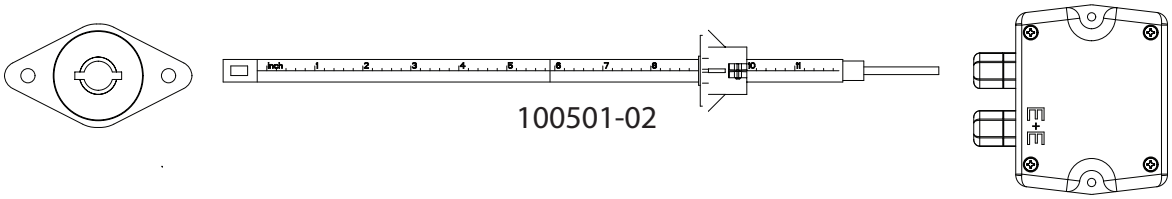

NOTE: *A24 sensor (100501-02) is factory set for 0 - 2000 ft/min and does not required any sensor jumper adjustments.*

c. To setup OAC after installing the velocity sensor, use the M4 unit controller menu.

Go to RTU MENU > SETUP > TEST & BALANCE > MIN DAMPER POSITION.

Adjust the minimum damper position with the blower on high for the proper CFM reading. When saving that setting, the velocity sensor reading will be saved automatically as the velocity set point.

Go to RTU MENU > SETUP > TEST & BALANCE > OUTDOOR AIR CONTROL VELOCITY SETPOINT = XXX FT/MIN

NOTE: *Will show you the saved value. To confirm, press save again.*

d. **100501-01 only**: If the reading seen at the OUTDOOR AIR CONTROL VELOCITY SETPOINT is close to the limits of that range, you need to go to the next velocity range M or H.

e. **100501-01 only**: If you need to go to a different Velocity Range, redo steps A through C. The L, M, or H set at the Configuration ID 1 - position 8 has to match the jumper setting on the 100501-01 sensor.

NOTE: *The minimum damper position setting must be set less than the OAC max damper position setting for the damper to modulate during Outdoor Air Control. The default setting for the maximum OAC damper position is 50%. To modify this setting, navigate to* ***SETTINGS > EDIT PARAMETER*** *and choose Parameter 117 (DCV MAX DAMPER OPEN).*

f. **100501-02 only**: When using a -02 sensor, the CONFIGURATION ID must be set to "H". This corresponds to the sensor jumper being placed in the "low" position. No other combinations can be used. See "Table 44. Variable Frequency Drive Control" on page 47.

The M4 unit controller will modulate the outdoor air damper based on settings configured using Parameters 126 through 130 and Parameter 134 in order to maintain a constant airflow.

14. Building Pressure Control (BPC)

The M4 unit controller supports building pressure control of ventilation. This feature will modulate the outdoor air damper in order to hold a constant building pressure. This mode requires an A34 building pressure sensor to be installed on M4 unit controller IAQ input (instead of CO2 sensor).

The Building Pressure Control option provides the ability to maintain a constant building pressure. A building pressure (A34) sensor located in the outdoor air section of the unit measures the difference between the outdoor and indoor (building) pressure and relays the information to the M4 unit controller. Based on the pressure information, the unit controller automatically adjusts the damper position and maintains a constant building pressure.

To enable this feature:

Go to RTU MENU > SETTINGS > RTU OPTIONS >DAMPER > DAMPER CONTROL VENTILATION OPTIONS and select BLDNG PRESS CTRL > PRESSURE SETPOINT = X.X IN H20.

See Parameters 134 and 327 through 329 for additional settings (see "Table 59. CORE Control System Unit Parameters" on page 101).

- **Alarm 103** - If both Advanced Airflow and building pressure control are enabled, then Alarm 103 will be activated. The alarm is based on the Parameter 134 setting.
- **Alarm 106** - Alarm 106 is activated when A34 sensor is detected as faulty.

15. Supply Air Delivery

15.1. Blower Delays

The following is summary of blower delay options, For more details refer to "5.3.9. Blower On-Delay" on page 17 and "5.3.10. Blower Off-Delay" on page 18.

15.1.1. Gas / Electric Units

The blower default delay is 40 seconds (Parameter 66 HT GAS BLR ON DELAY) after the gas valve is energized and a default of 120 seconds (Parameter 67 HT GAS BLR OFF DLAY) after the gas valve is de-energized. The blower operates anytime a heat limit trips.

15.1.2. Electric / Electric Units

The blower on delay is set to 0 seconds. The blower is delayed off by default for 20 seconds (Parameter 60 HT ELEC BL OFF DLAY) after the electrical heating is terminated.

15.1.3. Cooling Operation

The default on and off delays are 0, but may be adjusted by Parameter 79 (COOL BLR ON DELAY) or Parameter 80 (COOL BLR OFF DELAY). The on delay time period starts when the cooling demand is initiated. The off delay time period starts when the cooling demand is terminated.

15.2. Supply Constant Air Volume (CAV) Control Mode

Units with constant air volume have single-speed motor with belt driven blower. The same air volume is delivered for all operating modes (heating, cooling and ventilation) and stages. These units are indicated by blower type B in the model number. All blower on and off delays described above still apply.

15.3. Supply Multi-Stage Air Volume (MSAV) Control Mode

Units with Multi-Stage Air Volume are capable of delivering two or more stages/volumes of supply air. There are three blower types supported for Multi-Stage Air Volume:

- Belt driven blower with motors and external variable frequency drives – blower type M in model number.
- Direct driven blower using motors with integrated variable frequency control – blower type E in model number.
- Belt driven blower with two-speed motors with blower type T in model number.

Refer to the unit Parameter label, installation instruction or service manual for details on percentage outputs and factory default CFM settings.

15.4. Supply Variable Air Volume (VAV) Control Mode

Blower speed is controlled by the factory installed VFD between a minimum and maximum speed to maintain duct static pressure set points. There are four different set points: one for cooling, one for ventilation, one for operation during smoke alarm modes, and one for heating. The M4 controls the duct static pressure by reading the duct pressure and varying the blower speed on units with VFDs.

The minimum/maximum speed and static pressure set points are listed as follows:

Table 43. Minimum/ Maximum Speed and Static Pressure Set

Operation	Minimum Speed			Maximum Speed			Duct Static Setpoint		
	Para	Default	Range	Para	Default	Range	Para	Default	Range
Cooling	27	50%	30% - 100%	390	100%	40% - 100%	389	1.00” w.c.	0 - 5” w.c.
Ventilation	27	50%	30% - 100%	390	100%	40% - 100%	387	1.00” w.c.	0 - 5” w.c.
Smoke	27	50%	30% - 100%	390	100%	40% - 100%	386	1.00” w.c.	0 - 5” w.c.
Heating	28	50%	30% - 100%	390	100%	40% - 100%	388	1.00” w.c.	0 - 5” w.c.
Para = Parameter									

15.5. Variable Frequency Drive (VFD) Control

The M4 unit controller is only compatible with the factory installed variable frequency drives used to control the supply blower. The analog control for the variable frequency drives is 0 to 10VDC. This manual uses percent (%) for all blower and fan speeds.

EXAMPLE: *Fifty percent blower speed equals 30Hz equals 5VDC. Output frequency to the motor is displayed on the VFD seven-segment LEDs.*

Table 44. Variable Frequency Drive Control

Speed %	Motor Frequency (Hz)	Variable Frequency Drive Control Voltage (VDC)
30	18	3
40	24	4
50	30	5
60	36	6
70	42	7
80	48	8
90	54	9
100	60	10

15.6. Supply Constant Air Volume (CAV) with Zone Bypass Damper Control

Configuration ID 2 position 7 must be set to Y to enable CORE Control System Zone bypass operation with Constant Air Volume.

This configuration is used for L Connection or third-party zoning systems that utilize a blower bypass damper for controlling duct static pressure. The M4 unit controller controls duct static pressure by reading the duct pressure and varying the bypass damper position between minimum and maximum positions.

There are four different set points: one for cooling, one for ventilation, one for operation during smoke alarm modes, and one for heating. All blower on and off delays still apply.

The minimum/maximum damper positions and static pressure set points are listed as follows (for further details, see Zone Link (11W27) Installation instruction 505,090M.

Table 45. Supply CAV with Zone Bypass Damper Control

Operation	Minimum Position		Maximum Position		Duct Static Pressure	
	Parameter	Default	Parameter	Default	Parameter	Default
Cooling	38	20%	40	100%	37	1.0” in H20.
Ventilation	38	20%	40	100%	35	1.0” in H20.
Smoke Alarm Modes	38	20%	40	100%	34	1.0” in H20.
Heating	39	20%	40	100%	36	1.0” in H20.

15.6.1. Bypass Damper Actuator

The M4 unit controller is only compatible with bypass damper actuators specified in the product specification bulletin and specified during unit configuration purchase and field-installed. Specified dampers are used to control the supply air volume for constant air volume with bypass damper zoning applications. The analog control for the actuator is a 2 to 10VDC with 10VDC being fully closed. This manual uses percent (%) for bypass damper position.

EXAMPLE: *Seventy percent bypass damper position equals 4.4VDC.*

Table 46. Bypass Damper Actuator

Bypass Damper Position (%)	Control Voltage (VDC)
0 (closed)	10
10	9.2
20	8.4
30	7.6
40	6.8
50	6
60	5.2
70	4.4
80	3.6
90	2.8
100	2

Analog Output Control

The analog output on the M4 unit controller (P259-4) is set to closed loop PID or staged control when configured for constant air volume bypass damper (configuration ID 2, position **7** must be set to **Y**). The closed loop PID method used by the M4 unit controller has three constants manual resets; proportional (P), integral (I) and derivative (D) as shown in the following figure. The PID control constants, as well as the output values for minimum and maximum, may be adjusted if necessary.

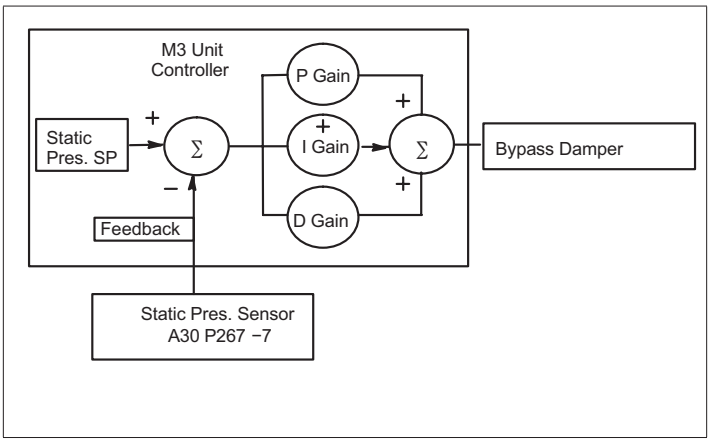

Figure 17. PID Operation Diagram for CAVB Air Delivery

15.6.1.1. Supply Manual Reset — Parameter 41

Supply Manual Reset is used when the output values for PID P, I, and D constant values are all set to 0 (OFF). This is the approximate output expected which allows quicker settling at set point. On constant air volume units with bypass damper, this is also the damper position when blower is off. Supply Manual Reset can be adjusted between 20 to 100%. Default setting is 52%.

15.6.1.2. Supply Proportional Constant (P) — Parameter 31

To handle the present, this is the value of the “gain’ that is multiplied times the error. The error is the difference between the output and the set point. A large value of “P” will cause the output to reach the set point faster, however, this faster rate can cause the output to overshoot the set point.

On the other hand, a low value of “P” will reduce overshoot, but will cause the output reaction to be too slow. The “P”constant parameter value can be adjusted between 0 –127 with 0 being off and 127 being the highest value.

15.6.1.3. Supply Integral Constant (I) — Parameter 32

To handle the past, this gain is proportional to the amount of time that the error is present. This gain tries to integrate out any offset. A high value of “I” can provide fast correction but can cause overshoot and ringing. The “I’ gain should be set to the lowest value possible that corrects the offset. “I” can be adjusted between 0-127 with 127 being the lowest value. The “I” constant parameter value is inverted. A value of 0 turns the integral factor off. A value of 127 is the minimum and 1 is the maximum.

15.6.1.4. Supply Derivative Constant (D) — Parameter 33

To handle the future, this gain is proportional to the rate of change of the error and provides a damping factor. The “D” constant parameter value can be adjusted between 0-127 with 0 being off and 127 being the highest value. Most M4 unit controller applications do not require using any “D” gain.

15.6.1.5. Parameter Adjustments and Tuning Method

In the event that the PID loop requires tuning, the following two methods are recommended depending on the severity of the problem:

a. **Parameter Adjustment Method** - In most cases the parameters will only need a small adjustment. In that case use the following table as a basic guide.

Table 47. Tuning

Change Desired	Parameter 31 (PID P)	Parameter 32 (PID I)	Parameter 33 (PID D)
Reduce Response Time	Increase	Decrease	Decrease
Reduce Overshoot	Decrease	Increase	Increase
Reduce Settling Time		Decrease	Decrease
Reduce Offset (steady state error)	Increase	Decrease	

b. **Tuning Method** - If the parameter adjustment method does not stabilize the system, you may use the following tuning method:

NOTE: *To use this method the system must be allowed to operate at the manual reset value (% output) without damaging the system.*

Step 1. Set the Parameters 31, 32 and 33 blower PID constants to 0 (OFF).

Step 2. **Start system**. Analog output value will be at the Parameter 41 (SUPPLY MANUAL RESET) value (%).

Step 3. **Monitor system**. System should be stable. If system is not stable at this point check for other problems. Adjusting the PID Parameters will not solve this problem.

Step 4. If system is stable, gradually increase the Parameter 31 (SUPPLY PID P CONST) until system starts oscillating (moving above and below set point, continuously).

Step 5. Reduce the Parameter 31 (SUPPLY PID P CONST) to 40-70% of the value set in step 4.

Step 6. Gradually start adding some Parameter 32 (SUPPLY PID I CONST) by setting to 127 and reduce setting until the steady state error (offset) is reduced to an acceptable level.

Step 7. If necessary, increase the Parameter 33 (SUPPLY PID D CONST) to reduce overshoot. Use of Parameter 33 (D) can increase settling time and/or lead to instability.

NOTE: *It is recommend that in most cases it is best not to use any Parameter 33 (SUPPLY PID D CONST).*

15.7. Ultra-High Efficiency 3- to 6-ton Units

15.7.1. Calibration

Calibration is a procedure which determines the relationship between motor torque and supply airflow by collecting operational data from the system once it has been applied in the field and the appropriate filters are installed. The goal is to discover appropriate PWM settings which to drive the ECM blower motor and that correspond to various supply airflow targets.

Once installed, each unit will undergo a calibration process. Calibration starts automatically with the first blower demand received after 24 hours completion of the installation. Installer can also trigger the calibration manually through the display menu option. Calibration is a onetime process after the installation and once successful, calibration data will be retained in M4 unit controller until the calibration is re-triggered manually.

User can change the supply airflow settings without re-triggering the calibration any time. If any of the new airflow targets are set to a value less than the minimum supply airflow as stored in calibration table then alarm code 140 (Advanced Airflow CFM Unattainable Target Too Low) is triggered.

If any of the supply airflow targets is set to a value greater than the maximum supply airflow as stored in the calibration table then alarm code 141 (Advanced Airflow CFM Unattainable Target Too High) is triggered.

The below steps are sequentially carried out during the calibration process.

a. **Initialization**: All components in roof top units except for the blower are turned OFF. System will wait for outdoor air damper to close. Then the blower is run at minimum PWM setting of 20%.

b. **Blower Diagnostics**: PWM is gradually increased in steps from 20% to 100%, with a torque value set by Parameter 247 (Advanced Airflow Blower Ramp Rate Set Point). At each step PWM, RPM and calculated supply airflow are recorded internally to a calibration table. In applications where the supply static pressure is high, blower calibration will stop once blower RPM has crossed the cutoff range (1250 rpm – for ECM motors) even before reaching 100% PWM. In applications where the supply static is less, blower calibration will stop once the calculated supply airflow is greater than the RTU airflow specification of 480 CFM/ton. If the calculated supply static pressure is greater than 1.8” or less than 0.1” Calibration process would be failed.

15.7.2. Supply Airflow Measurement and Control

Based on the blower demand (heating, cooling, ventilation and smoke) the corresponding Parameters 12, 13, 14, 17 and 18 are chosen as target air flows. Using the linear interpolation method the corresponding % PWM for the target airflow is calculated from the calibration table. Blower is run at this percentage PWM and the actual airflow is measured periodically and compared with the target.

If the RPM feedback of the blower is less than 50 rpm then Alarm 135 (Advanced Airflow No Supply Airflow) is triggered.

If the actual airflow is lesser than the target percentage set by Parameter 234 - Advanced Airflow Low Speed CFM Alarm Set Point (default 25%) for more than the time duration set by Parameter 235 - Advanced Airflow Low Speed CFM Alarm Evaluation (default 1800 seconds), then an Alarm Code 134 (Low Supply Airflow) is triggered. The alarm code is cleared only if the above stated condition is not present persistently for twice the time set by Parameter 235 during an active blower demand.

16. Discharge Air Control

16.1. Cooling

The discharge air control cooling option automatically cycles up to four stages of cooling to maintain a discharge air control cooling set point.

- When an economizer is installed, adjust free cooling set point Parameter 159 approximately two degrees lower than discharge air control cooling set point. This will allow free cooling to operate before discharge air control cooling energizes compressors.
- Refer to “Figure 18. Discharge Air Control Cooling Stages - Default Values Shown” on page 50.
- Adjust Parameter 111 to option 4 to enable discharge air control cooling.

NOTE: *Discharge air control as described here is not supported on Model L Ultra-High Efficiency 3 to 6-ton units.*

IMPORTANT

Discharge air sensor RT6 must be moved to the supply air duct, preferably after a 90 degree branch of the main duct.

Discharge Air Control Cooling is initiated by an input in one of three ways:

a. Y1 input from an external device— If the M4 unit controller is configured for wired thermostat.

Go to RTU MENU > ????

b. Cooling demand while in RTU STANDALONE mode:

Go to RTU MENU > SETUP > NETWORK INTEGRATION > NETWORK WIZARD > NETWORK = RTU STANDALONE > OCC BLOWER MODE = > BACK UP MODE = >

NOTE: *Continue to answer questions concerning heating and cooling set points.*

c. Cooling demand while in room sensor mode:

Go to RTU MENU > SETUP > NETWORK INTEGRATION > NETWORK INTEGRATION > NETWORK = (L CONNECTION, LONTALK OR BACNET) > any additional network settings > CONTROL MODE = ROOM SENSOR >

NOTE: *Continue to answer questions concerning network sensor type, OCC blower mode and backup mode.*

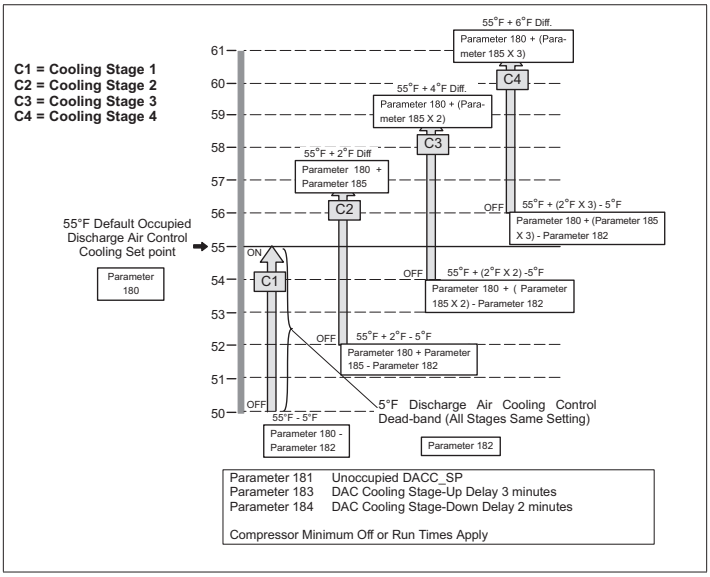

Figure 18. Discharge Air Control Cooling Stages - Default Values Shown

16.1.1. Discharge Air Control Cooling (DACC) Outdoor Air Temperature Reset

IMPORTANT

Outdoor air reset can also be used to adjust Parameter 159 (FREE COOL SUPPLY SP) when Discharge Air Cooling Control is not used. All references to the Discharge Air Cooling Control set point apply to the free cooling set point.

NOTE: *Parameter 287 cannot be modify directly from the M4 unit controller interface.*

The DACC OAT Reset and free cooling set point can be automatically reset when outdoor air temperature becomes cooler.

- For DACC OAT Reset, use the Lennox UC software to access Parameter 287 and enable DACC Outdoor Air Temperature Reset.
- For DACC OAT Reset, the discharge air cooling set point starts to increase when the outdoor air temperature drops to the Parameter 202 (DACC OAT RS ADJ SP) with a default of 80°F. The reset set point will continue to increase at the rate equal to the Parameter 201 (DACC OAT RS ADJ BND) divided by the Parameter 203 (DACC OAT RS PRP BND).

EXAMPLE: *The application calls for the discharge air cooling occupied set point Parameter 180 to be 55°F when Outdoor Air Temperature is 80°F or higher. When the Outdoor Air Temperature drops below 80°F, the set point needs to increase proportionately with the Outdoor Air Temperature decrease (maximum set point increase of 10°F). The 10°F Outdoor Air Temperature decrease is called the Parameter 203 and the set point increase of 10°F is called the Parameter 201. See figure 14.*

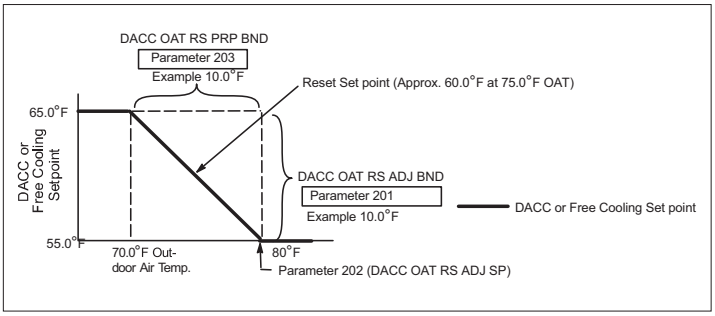

Figure 19. Outdoor Air Reset Example

To use example values, set the following Parameters:

- Parameter 201 – Set to 10.0°F (this setting is for Discharge Air Control Cooling Outdoor Air Temperature Adjustment Band.
- Parameter 202 – Set to 80.0°F (this setting is for Discharge Air Control Cooling Outdoor Air Temperature Cooling Reset Set Point
- Parameter 203 – Set to 10.0°F (this setting is for Discharge Air Control Cooling Outdoor Ambient Air Temperature Cooling Proportional Band.

16.1.2. Discharge Air Control Cooling (DACC) Return Air Temperature Reset

IMPORTANT

Return air reset can also be used to adjust Parameter 159 when Discharge Air Control Cooling is not used. All references to the Discharge Air Control Cooling set point apply to the free cooling set point.

The DACC RAT and free cooling set point can be automatically reset when outdoor air temperature becomes cooler.

NOTE: *Parameter 287 cannot be modified directly from the M4 unit controller interface.*

- For DACC RAT Reset, use the Lennox UC software to access Parameter 287 and enable DACC RAT Reset.
- For DACC RAT Reset, the discharge air cooling set point starts to increase when the return air temperature drops to the Parameter 205 (DACC RAT RS ADJ SP) which has a default of 70.0°F. The reset set point will

continue to increase at the rate equal to the Parameter 204 (DACC RAT RS ADJ BND) divided by the Parameter 206 (DACC RAT RS PRP BND).

EXAMPLE: *The application calls for the discharge air occupied set point Parameter 180 to be 55.0°F when Return Air Temperature is 70.0°F or higher. When the Return Air Temperature drops below 70°F, the set point needs to increase proportionately with the Outdoor Air Temperature decrease (maximum set point increase of 10°F). The 10.0°F Return Air Temperature difference is called Parameter 203 and the set point increase of 10.0°F is called the Parameter 204.*

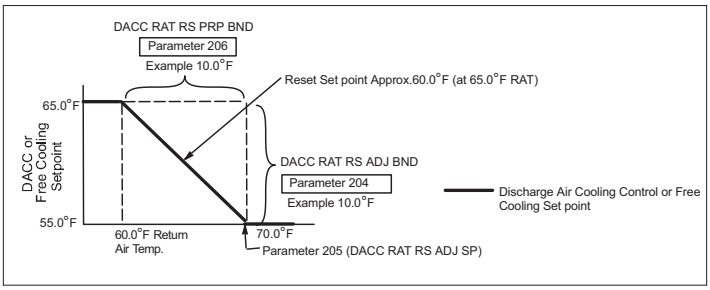

Figure 20. Return Air Reset Example

To use example values, set the following Parameters:

- Parameter 205 – Set to 70.0°F
- Parameter 206 – Set to 10.0°F
- Parameter 204 – Set to 10.0°F (this setting enables Discharge Air Control Cooling return air reset).

16.1.3. Discharge Air Control Cooling (DACC) Total Reset Limit

Parameter 207 with a default setting of 10.0°F defines the total Discharge Air Control Cooling set point reset limit. This total limit is the sum of both return and outdoor Discharge Air Control Cooling resets. This Parameter limits total DACC_SP adjustment band and overrides the adjustment bands for Parameter 201 and Parameter 204 if necessary.

16.2. Heating

The discharge air control heating option automatically cycles up to four-stages of heating to maintain a discharge air control heating set point.

- Discharge Air Control Heating option applies to gas/ electric and electric / electric units only.
- Refer to “Figure 21. Discharge Air Control Heating Stages - Default Values Shown” for Discharge Air Control Heating heating stages.
- Adjust Parameter 112 to 1 to enable discharge air control.

IMPORTANT

Discharge air sensor RT6 must be moved to the supply air duct, preferably after a 90 degree branch off of the main duct.

Discharge Air Control Heating is initiated by an input in one of three ways:

a. W1 input from an external device if M4 unit controller is configured for wired thermostat mode.

Go to RTU MENU > SETTINGS > ?????

b. Heating demand while in zone sensor mode.

c. Heating demand while in L-Connection room sensor mode.

NOTE: *Additional Parameters can be set depending on selection choices.*

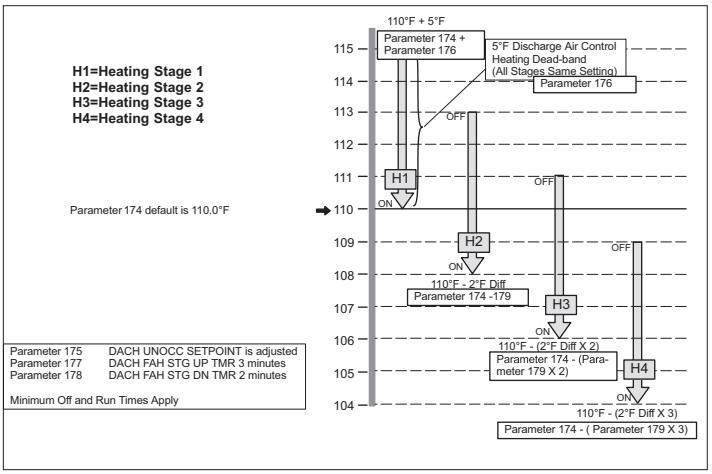

Figure 21. Discharge Air Control Heating Stages - Default Values Shown

16.2.1. Discharge Air Control Heating (DACH) Outdoor Air Temperature Reset

NOTE: *Parameter 287 cannot be modify directly from the M4 unit controller interface.*

- Using the Lennox UC software, access Parameter 287 and enable DACH Outdoor Air Reset. If using the Lennox UC software.
- The Discharge Air Control Heating set point can be automatically reset when outdoor air temperature becomes warmer.
- For outdoor air based Discharge Air Control Heating set point reset, the discharge air control heating set point starts to decrease when the outdoor air temperature rises to Parameter 209 set point which has a default of 40°F. The reset set point will continue to decrease at the rate equal to Parameter 208 divided by Parameter 210.

EXAMPLE: *The application calls for the discharge air control heating occupied set point - Parameter 174 to be 110°F when outdoor air temperature is 40°F or lower. When the outdoor air temperature rises above 40°F, the set point needs to decrease proportionately with the outdoor air temperature increase (maximum set point increase of 10°F. The 10°F outdoor air temperature decrease is called Parameter 213 and the set point decrease of 10°F is called Parameter 211.*

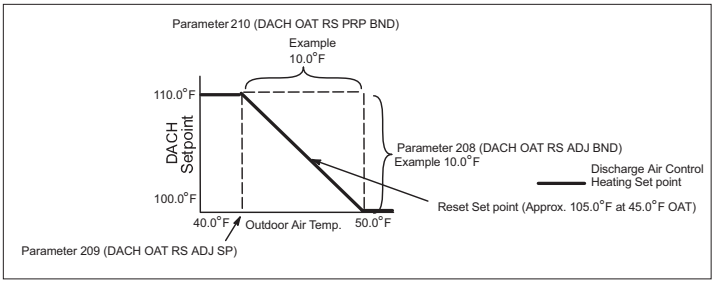

Figure 22. Outdoor Air Reset Example

To use example values, set the following Parameters:

- Parameter 208 – Set to 10.0°F (this setting enables Discharge Air Control Heating Outdoor Air Temperature Reset Adjustment Band).
- Parameter 209 – Set to 40.0°F (this setting enables Discharge Air Control Heating Outdoor Air Temperature Reset Adjustment Set Point).
- Parameter 210 – Set to 10.0°F (this setting enables Discharge Air Control Heating Outdoor Air Temperature Reset Proportional Band).

16.2.2. Discharge Air Control Heating (DACH) Return Air Temperature Reset

NOTE: *Parameter 287 cannot be modify directly from the M4 unit controller interface.*

- Using the Lennox UC software, access Parameter 287 and enable DACH Return Air Temperature Reset.
- The Discharge Air Control Heating set point can be automatically reset when return air temperature becomes warmer.
- For return air based Discharge Air Control Heating set point reset, the discharge air control heating set point starts to decrease when the return air temperature rises to the Parameter 212 that has a default setting of 70.0°F. The reset set point will continue to decrease at the rate equal to the Parameter 211 divided by the Parameter 213.

EXAMPLE: *The application calls for the discharge air control heating occupied set point Parameter 174 to be 110.0°F when Return Air Temperature is 70.0°F or lower. When the Return Air Temperature increases above 70.0°F, the set point needs to decrease proportionately with the Return Air Temperature increase (maximum set point increase of 10.0°F). The 10.0°F Return Air Temperature difference is called the Parameter 213 and the set point increase of 10.0°F is called Parameter 204. See the following figure.*

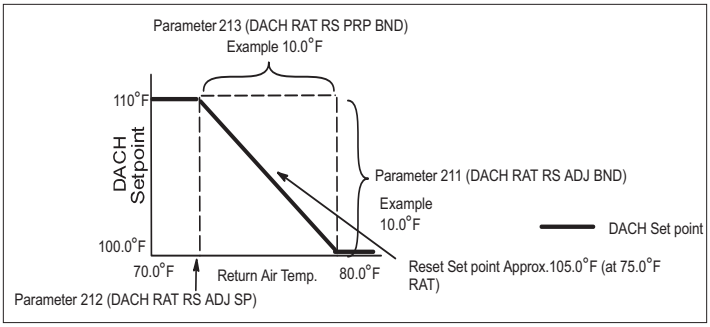

Figure 23. Return Air Reset Example

To use example values, set the following Parameters:

- Parameter 211 – Set to 10.0°F (this setting enables Discharge Air Control Heating Return Air Temperature Adjustment Band).
- Parameter 212 – Set to 70.0°F (this setting enables Discharge Air Control Heating Return Air Reset Set Point).
- Parameter 213 – Set to 10.0°F (this setting enables Discharge Air Control Heating Return Air Temperature Proportional Band).

16.2.3. Discharge Air Control Heating (DACH) Total Reset Limit

Parameter 214 has a default setting of 10°F and defines the total Discharge Air Control Heating set point reset limit. This total limit is the sum of both return and outdoor Discharge Air Control Heating resets. This Parameter limits total discharge air control heating adjustment band and overrides the adjustment bands for Return Air Temperature and Outdoor Air Temperature - Parameter 212 and Parameter 208 if necessary.

16.2.4. Relationship between DACC, DACH and MGV/VAV

Table 48. Relationships

Configuration	Options
VAV and no MGV	• INSTALL > DEHUMIDIFIER MODE > DACC (show options enabled, disabled, occupied setpoint, unoccupied setpoint) • If user selects “disabled” -> UI screen exits back to SETUP->INSTALL. • If user selects enabled, then UI screen will proceed to asking for occupied setpoint, and then, unoccupied setpoint. • The user modifies these setpoints (default values will be shown). • No DACH screen
VAV and MGV	• INSTALL > DEHUMIDIFIER MODE > DACC (show options enabled, disabled, occupied setpoint, unoccupied setpoint) • If user selects disabled. • INSTALL > DEHUMIDIFIER MODE >DACH (show options, occupied setpoint, unoccupied setpoint). • Will display occupied and unoccupied setpoints, and allows adjust these setpoints prior to exit.
No VAV or MGV	Will not display option for DACC or DACH.

Table 48. Relationships

Configuration	Options
MGV only	• NSTALL > DEHUMIDIFIER MODE > DACC (show options enabled, disabled, occupied setpoint, unoccupied setpoint). • If user selects disabled. • INSTALL > DEHUMIDIFIER MODE > DACH (show options, occupied setpoint, unoccupied setpoint). • Will display occupied and unoccupied setpoints, and allows adjust these setpoints prior to exit.

Third-Party Zoning

The M4 unit controller is only compatible with bypass damper actuators specified in the Product Specification bulletin. “Figure 24. Field Wiring Summary for Constant Air Volume Unit with Bypass Damper” is a Constant Air Volume with bypass damper unit wiring summary.

In addition to providing bypass damper control (Constant Air Volume units), the M4 unit controller provides discharge air control for cooling and/or heating. More options are available which control single-stage or two-stage power exhaust fans.

Only four digital inputs are required to control the rooftop unit for third-party zoning applications:

- G (blower enable), thermostat demand
- OCP occupied mode
- Y1 (enables discharge cooling)
- W1 (enables discharge heating)

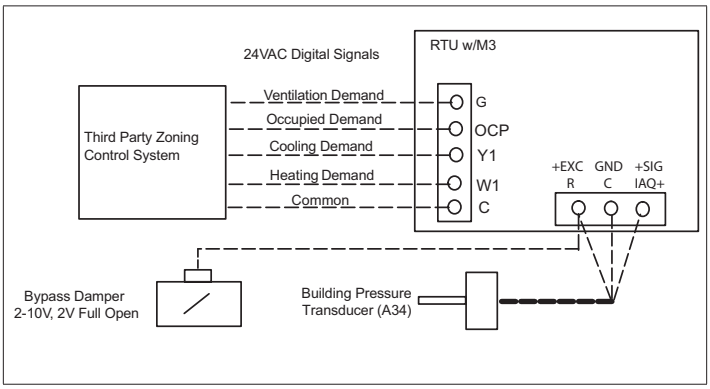

Figure 24. Field Wiring Summary for Constant Air Volume Unit with Bypass Damper

16.3. Air Delivery Operation

When a G signal is energized, the M4 unit controller will control a purchased and field-installed bypass damper to hold a constant supply duct static pressure. The M4 unit controller uses a pressure sensor input and a PID control loop to maintain duct static pressure. For increased flexibility, the M4 unit controller has separate adjustable static pressure set points for ventilation, cooling, heating and smoke alarms. Refer to sections “15.2. Supply Constant Air Volume (CAV) Control Mode” on page 46 through “15.4. Supply Variable Air Volume (VAV) Control Mode” on page 47. for further details concerning supply air operation.

16.4. Occupied /Unoccupied Operation

When the thermostat demand occupied mode signal is energized, the M4 unit controller will adjust the fresh air damper to a fixed minimum position or a modulating position (based on a carbon dioxide sensor input). Also during morning warm-up/cool-down, the M4 unit controller will keep the damper closed based on the settings selected.

16.5. Cooling Operation

When a Y1 signal is energized the M4 unit controller will control up to four stages of cooling (depending on rooftop unit size) to automatically maintain a constant discharge air cooling temperature. The M4 unit controller also has advanced discharge air cooling reset options based on return air temperature and/or outside air temperature. Refer to “16.1. Cooling” on page 49 for further details.

16.5.1. Discharge Air Control Cooling Outdoor Air Reset

The outside air reset saves energy by gradually increasing the discharge air set point as the outside air temperature decreases.

Refer to “16.1.1. Discharge Air Control Cooling (DACC) Outdoor Air Temperature Reset” on page 50 for further details.

16.5.2. Discharge Air Control Cooling Return Air Reset

The return air reset reduces the possibility of over-cooling by gradually increasing the discharge air set point as the return air temperature decreases. Over-cooling may occur if the zoning system is misapplied, has an abnormal condition, or a dominant zone. Refer to “16.2.2. Discharge Air Control Heating (DACH) Return Air Temperature Reset” on page 52 for further details.

16.6. Heating Operation

When a W1 signal is energized, the M4 unit controller will control up to four stages of heating (depending on rooftop unit size) to automatically maintain a constant discharge air heating temperature. The M4 unit controller also has advanced discharge air heating reset options based on return air temperature and/or outside air temperature. Refer to “16.2. Heating” on page 51 for further details.

16.6.1. Discharge Air Control Heating Outdoor Air Reset

The outside air reset saves energy by gradually decreasing the discharge air set point as the outside air temperature increases. Refer to “16.2.1. Discharge Air Control Heating (DACH) Outdoor Air Temperature Reset” on page 51 for further details.

16.6.2. Discharge Air Control Heating Return Air Reset

The return air reset reduces the possibility of overheating by gradually decreasing the discharge air set point as the return air temperature increases. Overheating may occur if the zoning system is miss-applied, has an abnormal condition,

or dominant zone. Refer to “16.2.2. Discharge Air Control Heating (DACH) Return Air Temperature Reset” on page 52 for further details.

16.7. Power Exhaust Operation

The M4 unit controller has power exhaust control options that include support for single-stage, two-stage equipment an variable speed. See Power Exhaust Section.

16.8. Supply Bypass Damper Control

The actuators control the supply air volume for constant air volume units equipped with a bypass damper in zoning applications. The analog control for the actuator is 2-10VDC. Dampers are closed at 10VDC and fully open at 2VDC. This manual uses percent (%) to indicate bypass damper position.

EXAMPLE: *Seventy percent bypass damper position is equal to 4.4VDC.*

Table 49. Supply Bypass Damper Control

Bypass Damper Position (%)	Control Voltage (VDC)	Bypass Damper Position (%)	Control Voltage (VDC)	Bypass Damper Position (%)	Control Voltage (VDC)	Bypass Damper Position (%)	Control Voltage (VDC)
0 (closed)	10	30	7.6	60	5.2	90	2.8
10	9.2	40	6.8	70	4.4	100	2
20	8.4	50	6	80	3.6		

17. Load Shedding Options

The M4 unit controller may be setup to de-energize part or all of the mechanical cooling provided by a rooftop unit.

Configuration ID 2, position 8 defines where the digital input for load shedding is configured.

Go to **SETUP > INSTALL > Configuration ID 2, position 8** will need to be set to one of the following options:

- **N** - NOT INSTALLED
- **G** - GLOBAL INPUT (A55-P297-9)
- **2** - DI-2 (DIGITAL INPUT 2 - A55 - P299 - 4)
- **3** - DI-3 (DIGITIAL INPUT 3 - A55 - P299 - 6)

NOTE: *When options 2 or 3 are enabled on either DI-2 or DI-3, these inputs cannot not be shared with any other devices (i.e, global, blower overload or drain pan overflow). Similarly option G (Global input) may be used only if economizer global mode is not enabled.*

Parameter 194 - select 0 - 4. This Parameter defines how many compressors are turned off when load shedding is active (i.e., digital input ON; contact closed).

Table 50. M4 Load Shedding Options

Control Parameter			Control Value			Units	Description
No	Screen Name	Parameter Short Description	Min.	Default	Max.		
194	LOAD SHED NUM COMP	Number of compressors to shed during load shedding	0	0	4	Option	Number of compressors to be turned off when load shedding is active. For two-stage A box compressor, a value of one shuts off 2nd stage only and a value of 2 turns compressor completely off.

18. Service Relay

18.1. Service Relay Operation

The M4 unit controller Service Relay output (A55_P298-8) default operation indicates that service is required.

If the default operation is not required, the Service Relay output may be used as a control output. Use Parameter 186 to choose the input which will trigger the Service Relay output. The formula X + (32 x Y) + (16 x Z) is used to select the option.

If Parameter 186 input sources 7-9 are used, the set point and dead-band must be set with Parameter 187, Parameter 188, Parameter 189, Parameters 190, 191 and 192.

18.2. System Relative Humidity Options

Table 51. System Relative Humidity Options

Option	Description
0 - Hysteresis	• ON when relative humidity is equal to or greater than Parameter 188 setting. • OFF when relative humidity is less than Parameter 188 setting minus Parameter 191.
1 - Window	• ON when relative humidity is within range. • Parameter 188 plus Parameter 191. NOTE: Fixed 3% relative humidity hysteresis on options 1 - 3
2 - Delayed ON	Only ON when relative humidity is greater than Parameter 188. Otherwise service delay will be OFF.
3 - Delayed OFF	When relative humidity falls below Parameter 188 the service delay is turned OFF once Parameter 193 setting (seconds) is reached

18.3. System Indoor Air Quality / Carbon Dioxide Options

Table 52. System IAQ / Carbon Dioxide Options

Option	Description
0 - Hysteresis	• ON when indoor air quality/carbon dioxide is greater than Parameter 187 setting. • OFF when indoor air quality/carbon dioxide is less than Parameter 187 minus Parameter 190 setting.
1 - Window	• ON when indoor air quality/CO_2 within range. • Parameter 187 (SRV OUTPT SP CO_2) plus Parameter 190.
2 - Delayed ON	ON when indoor air quality/CO_2 is greater than Parameter 187. Otherwise service delay will be OFF.
3 - Delayed OFF	When indoor air quality/CO_2 falls below Parameter 187 the service delay is turned OFF once Parameter 193 setting (seconds) is reached.

18.4. System Outdoor Air Temperature Operation

Table 53. System Outdoor Air Temperature Operation Options

Option	Description
0 - Hysteresis	• ON when outdoor air temperature is greater Parameter 189 setting. • OFF when outdoor air temperature is less than Parameter 189 setting
1 - Window	• ON when outdoor air temperature is within range. • Parameter 189 plus Parameter 192.
2 - Delayed ON	ON when outdoor air temperature is greater than Parameter 189 setting. Otherwise service delay will be OFF.
3 - Delayed OFF	When outdoor air temperature falls below Parameter 189 the service delay is turned off once Parameter 193 setting (seconds) is reached.

1. Determine:
   Parameter 186 - Input Source X to option "7" (relative humidity)
   Algorithm Y to option "0" (hysteresis loop)
   Inversion Z option "0" (output not inverted)
2. Apply step 1 to parameter 186 formula:
   Parameter 186 = X + (32 x Y) + (16 x Z)
   = 7 + (32 x 0) + (16 x 0)
   = 7
3. Set parameter 186 to "7".
4. Set parameter 188 to 60% relative humidity
5. Set parameter 191 to 5% dead-band.

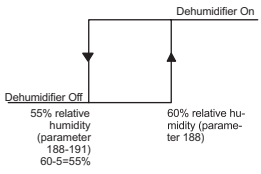

Figure 25. Example 1 — Service Output Energizes Dehumidifier at 60% Relative Humidity / Turns Off at 55% Relative Humidity

1. Determine:
   Parameter 186 - Input Source X to option "7" (relative humidity)
   Algorithm Y to option "0" (hysteresis loop)
   Inversion Z option "1" (output inverted)
2. Apply step 1 to parameter 186 formula:
   Parameter 186 = X + (32 x Y) + (16 x Z)
   = 7 + (32 x 0) + (16 x 1)
   = 7 + 0 + 16
   = 23
3. Set parameter 186 to "23".
4. Set parameter 188 to 35% for 35% relative humidity
5. Set parameter 191 to 5% for 5% dead-band.

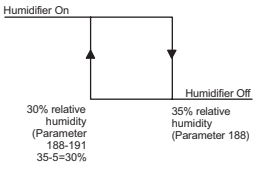

Figure 26. Example 2 — Service Output Energizes Dehumidifier at 30% relative humidity / Turns Off at 35% Relative Humidity

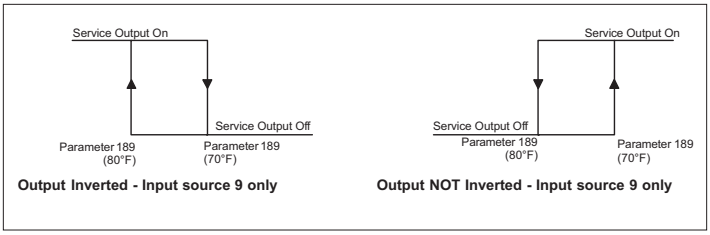

Figure 27. Outdoor Air Temperature Operation - Service Output Energized

NOTE: *Use the service output to energize at 80°F and off at 70°F (inverted) and the service output operation being energized at 70°F and off at 80°F (not inverted.*

IMPORTANT

This applies to input source option 9 (Outdoor Air Temperature) on Parameter 186.

19. Advanced Airflow System (Smart Airflow™) - Model L High and Ultra Efficiency 3 to 5-ton Units

The optional factory installed Advanced Airflow System employs a pressure sensor equipped economizer and an ECM blower motor. This feature enables the M4 unit controller to accurately measure and control the Supply Airflow and Outdoor Airflow.

NOTE: *Ultra A Box units do not have the economizer/ minimum position setting*

19.1. Calibration

Calibration is a procedure which determines the relationship between motor torque and supply airflow by collecting operational data from the system once it has been applied in the field and the appropriate filters are installed. The goal is to discover appropriate PWM settings which to drive the ECM blower motor and that correspond to various Supply Airflow targets.

Once installed, each unit will undergo a calibration process. Calibration starts automatically with the first blower demand received after 24 hours completion of the installation. Installer can also trigger the calibration manually through the Display Menu option. Calibration is a onetime process after the installation and once successful, calibration data will be retained in M4 unit controller until the calibration is re-triggered manually.

User can change the supply airflow settings without re--triggering the calibration any time. If any of the new airflow targets are set to a value less than the minimum supply airflow as stored in calibration table then Alarm Code 140 (Advanced Airflow CFM Unattainable Target Too Low) is triggered. If any of the supply airflow targets is set to a value greater than the maximum supply airflow as stored in the calibration table then Alarm Code 141 (Advanced Airflow CFM Unattainable Target Too High) is triggered.

The below steps are sequentially carried out during the calibration process.

19.1.1. Initialization

All components in roof top units except for the blower are turned OFF. System will wait for outdoor air damper to close.

Then the blower is run at minimum PWM setting of 20%.

19.1.2. Blower Diagnostics

PWM is gradually increased in steps from 20% to 100%, with a torque value set by Parameter 247 (Advanced Airflow Blower Ramp Rate Set Point). At each step PWM, RPM and calculated Supply Airflow are recorded internally to a calibration table. In applications where the supply static pressure is high, blower calibration will stop once blower RPM has crossed the cutoff range (1250 rpm – for ECM motors) even before reaching 100% PWM. In applications where the Supply Static is less, blower calibration will stop once the calculated supply airflow is greater than the RTU airflow specification of 480 CFM/ton.

If the calculated Supply Static Pressure is greater than 1.8" or less than 0.1" Calibration process would be failed.

19.1.3. Damper Diagnostic

PWM is set to a value to generate 400 CFM/ton Supply Airflow and then damper is moved to 0%, 50% and 100% and the corresponding differential pressure is recorded and diagnosed. If the maximum airflow found in Blower calibration is less than 400 CFM/ton then PWM corresponding to maximum Airflow is used.

19.2. Supply Airflow Measurement and Control

Based on the blower demand (Heating, Cooling, Ventilation and Smoke) the corresponding Parameters 12, 13, 14, 17 and 18 are chosen as target air flows. Using the linear interpolation method the corresponding % PWM for the target airflow is calculated from the calibration table. Blower is run at this percentage PWM and the actual airflow is measured periodically and compared with the target.

If the RPM feedback of the blower is less than 50 rpm then Alarm 135 (Advanced Airflow No Supply Airflow) is triggered.

If the actual airflow is lesser than the target percentage set by Parameter 234 - Advanced Airflow Low Speed CFM Alarm Set Point (default 25%) for more than the time duration set by Parameter 235 - Advanced Airflow Low Speed CFM Alarm Evaluation (default 1800 seconds), then an Alarm Code 134 (Low Supply Airflow) is triggered. The alarm code is cleared only if the above stated condition is not present persistently for twice the time set by Parameter 235 during an active blower demand.

19.3. Outdoor Airflow (OA) Measurement and Control

Target OA is calculated for all the modes (DCV, Free Cooling, Minimum Run) individually when there is a change in the supply airflow target or minimum and maximum OA targets (Parameters 237, 241 and 242). DCV and minimum run modes will be active only if occupied. Refer to "11. Economizer" on page 40 to understand the modes of operation of an economizer. Target OA CFM is calculated as below.

19.3.1. DCV Mode

Refer to "12.4. Parameter Adjustments" on page 44. Replace the "MaxOpen (Parameter 117)" with Parameter 242 CFM to find out the Outdoor Airflow Target in DCV mode.

19.3.2. Minimum Run Mode

OA Target is Parameter 237 CFM.

19.3.3. Free Cooling Mode

Refer to "11.8. Free Cooling Damper Maximum Position" on page 41. Replace maximum damper opening for free cooling (Parameter 131) with Parameter 241 to find the Outdoor Airflow Target in Free cooling mode. If DCV target is greater than Free Cooling target then DCV will override.

For any damper opening during a blower demand, actual outdoor air (OA) is measured using an empirical model created based on the outdoor air differential pressure sensor input (PT5) specifically for the Model L Standard Efficiency 3- to 6-ton Economizers.

Actual outdoor air is calculated periodically (15 seconds) and compared with the target OA and the error is accumulated for a period of 10 min. Target OA is then adjusted so as to minimize the accumulated error and a new damper position is calculated for the adjusted target OA. Damper is moved to the new position and then the same process is continued every 10 min. Damper control will be stopped once the difference between the new damper position and the current position is less than 2%, but the error will be still accumulated and new damper position calculated every 10 min.

19.3.4. Ventilation Errors

19.3.4.1. Under Ventilation

If the actual outdoor air is less than the target outdoor air by a percentage set by Parameter 239 (default 25%) for a time period (seconds) set by Parameter 243 (default 1800 seconds), then Alarm Code 137 (Advanced Airflow Low Outdoor Airflow) is triggered. This is realized by calculating the average error for duration set by Parameter 243 from the accumulated error and then comparing it with Parameter 239 percent of the target outdoor air. Average error will be negative during under ventilation.

19.3.4.2. Over Ventilation

If the actual outdoor air is greater than the target outdoor air percentage set by Parameter 240 (Advanced Air Flow High Outdoor CFM Alarm Set Point) for a duration set by Parameter 244 (Advanced Air Flow Low Outdoor CFM Alarm Evaluation), then Alarm Code 139 (Advanced Airflow Outdoor Airflow Too High) is triggered. This is realized by calculating the average error for Parameter 244 seconds from the accumulated error and then comparing it with the percentage set for Parameter 239 (Advanced Airflow Outdoor CFM Alarm Set Point), the target outdoor air. Average error will be positive during over ventilation.

19.3.5. Damper Diagnostics

Damper actuator takes control voltage as input (P262 VOT) and gives back the position feedback voltage (P262 DPOS). The operating range of the damper is 2V to 10V corresponding to the 0 and 100 percent opening. Due to the slow nature of the actuator when a new control voltage is set, it takes

a predefined amount of time to move to the new position and set the feedback voltage to a value corresponding to the new position. The current Siemens actuator 35 INLB is for Model L Standard Efficiency 3-ton and 4-ton units takes 30 seconds to move from 0 to 100 percent. The 62 INLB actuator for Model L Standard Efficiency 5-ton unit takes 90 seconds for the same function.

- Damper Stuck Condition: When the control voltage is changed and the feedback voltage does not reach the control voltage +/ 0.15 V (+/ 2%) within predefined times, then Alarm 136 (Advanced Airflow Outside Air Damper/ ECON Mechanical Fault) is triggered. Damper travel time is a prorated value of the total travel time (fixed as 90 seconds) considering the current position and the target position of the actuator.

  EXAMPLE: *If damper is to be moved from 40 to 60 percent then the damper travel time is 18 seconds.*

- Damper Error: Once the damper has reached the target position, differential pressure across the damper (PT5) is measured and the measured value is diagnosed. Because of the empirical model of outdoor air control, the M4 unit controller knows if the value measured for a given supply airflow and damper opening is a legitimate value or not. In a condition where the differential pressure is found to be not legitimate (either very high or very low than normal) for a period set by Parameter 245 (factory default is 1800 seconds), then Alarm Code 143 (Advanced AIRFLOW DAMPER PRESSURE ERROR) is triggered. Valid range for Parameter 245 is 0 to 3600 seconds.

20. Sequence of Operation

20.1. Unit Controller Control Modes

Unit controller can operate in several different control modes. The selection of these control modes will depend upon several factors:

- Unit type - constant air volume with MSAV.
- Room application (single-zone, bypass zoning or zoning)
- Which device will control rooftop unit staging and unit operation (thermostat / third-party controller or the M4 unit controller)
- The desired level of unit heating and cooling staging (2 heat / 2 cool or 4 heat / 4 cool)

20.1.1. Unit Controller In Room Sensor Mode

When in the room sensor mode, the M4 unit controller can provide up to four stages of mechanical heating and cooling operation. Constant volume units in single-zone applications can use this room sensor mode. The room sensor will provide space temperature information to the M4 unit controller. The M4 unit controller houses all space temperature set points and controls all rooftop unit staging and general operation. The M4 unit controller also determines unit error codes, provides diagnostic information and maintains safe operation limits. It is important to note that scheduling and/or set point control requires the use of a L Connection Network Control Panel.

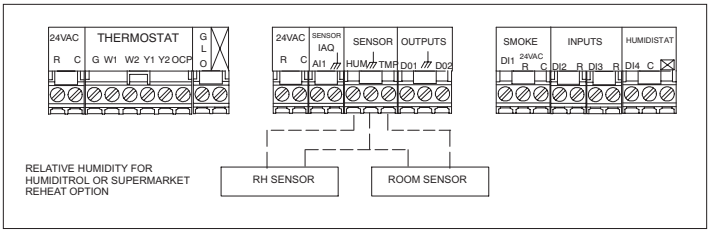

Figure 28. Constant Air Volume Unit in Single-Zone Application

20.1.2. Unit Controller In Thermostat Mode

When in the thermostat mode, the M4 unit controller can provide up to two stages of mechanical heating and cooling operation. Three stage cool operation is possible with special setting described in section 2.1.1.

Constant volume units in either single-zone or bypass zoning applications can use this control mode. To operate correctly, a Lennox or third-party thermostat or unit control must provide the following wiring connections to the M4 unit controller:

a. Ventilation demand

b. Occupied demand

c. Heating demand one

d. Heating demand two

e. Cooling demand one

f. Cooling demand two

In this configuration, either the thermostat or unit control will control the rooftop unit staging and general operation. The M4 unit controller functions primarily to determine unit error codes, provide diagnostic information and maintain safe operation limits

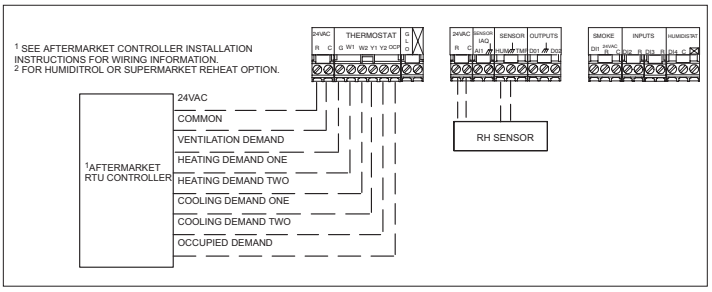

Figure 29. Constant Air Volume Unit in Single-Zone Application

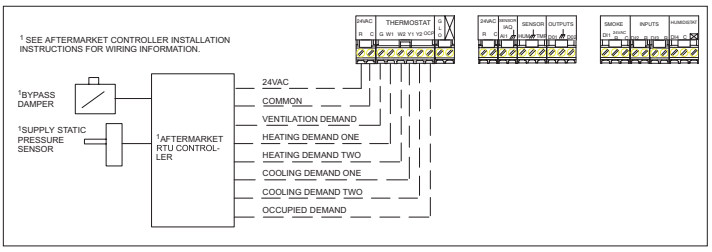

Figure 30. Constant Air Volume Unit in Bypass Zoning Application

When in thermostat mode and configured for discharge air temperature control, the M4 unit controller can provide up to four stages of mechanical heating and cooling operation. Variable air volume units using a variable frequency drive on the supply fan and operating in a zoning application

must use this control mode. Although not as common, constant volume units in either single-zone or bypass zoning applications may also use this control mode. To operate correctly, a Lennox or third-party thermostat or unit control must provide the following wiring connections to the M4 unit controller:

a. Ventilation demand

b. Occupied demand

c. Heating demand

d. Cooling demand

In this control mode the M4 unit controller will control all cooling and heating staging to maintain the discharge air temperature set points set in the M4 unit controller (typically 55°F for cooling and 110°F for heating). A third-party unit control, or a thermostat can provide these inputs to the M4 unit controller.

EXAMPLE: *If the unit control passes along a demand for cooling then the M4 unit controller will activate the refrigeration system and increase or decrease cooling stages to maintain the discharge supply air temperature set point. Along with providing control of the rooftop unit, the M4 unit controller will also provide error codes and diagnostic information.*

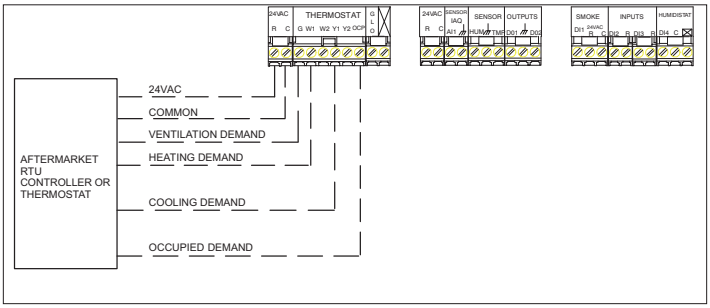

Figure 31. Variable Air Volume Unit in Zoning Application

20.1.3. Operations Common to All Rooftop Units

The following sequence of operation information applies to all rooftop units regardless of M4 unit controller control mode, unit type or zoning application.

20.1.3.1. Occupied Demand

Upon receiving occupied and ventilation demands from the a zoning control the M4 unit controller adjusts the fresh air damper to either a fixed minimum position or allows it to modulate based on a carbon dioxide sensor (demand control ventilation). The carbon dioxide sensor can be wired directly to the M4 unit controller, to another controller that can monitor the sensor and pass a signal to the M4 unit controller for damper control, or to both the M4 unit controller and another device for monitoring through the desired man-machine interface while the M4 unit controller maintains damper control.

During morning warm-up the M4 unit controller keeps the fresh air damper closed based on M4 unit controller configuration settings. Set points for minimum and maximum damper position and carbon dioxide control reside in the M4 unit controller memory, have factory default settings, and may be adjusted at start up. The user can change these settings either locally or remotely through Lennox L Connection Network® unit controller Software. The user will not have the ability to adjust the settings through third-party software or control devices.

20.1.3.2. Demand Control Ventilation (DCV)

Demand control ventilation is used in applications where the demand for fresh outdoor air fluctuates during the occupied time period. Using a carbon dioxide sensor connected directly to the M4 unit controller, the unit can intelligently increase or decrease the amount of fresh outdoor air by changing the outdoor air damper position. The M4 unit controller has two operation modes available, set point or proportional, to control the outdoor air damper position.

20.1.3.3. Fresh Air Tempering (FAT)

In applications with large outdoor air requirements, fresh air tempering is used to minimize temperature fluctuations in the conditioned space. The M4 unit controller controls discharge air temperature by energizing heating or cooling in response to the discharge air temperature. Fresh air tempering only occurs during occupied periods when the blower is running and when there is no heating or cooling demand from the space. The user must configure the M4 unit controller to turn on the fresh air tempering options To enable FAH:

Go to RTU MENU > SETUP > TEST & BALANCE > DAMPER

NOTE: *There are several settings to select in this path before reaching the desired setting)* **FRESH AIR HEATING ENABLE FAH = YES or NO**. *After enabling FAH, the next screen will allow the FAH set point to be configured. FAH set point range is between 40.0°F to 70.0°F.*

To enable FAC:

Go to RTU MENU > SETUP > TEST & BALANCE > DAMPER

NOTE: *There are several settings to select in this path before reaching the desired setting)* **FRESH AIR COOLING ENABLE FAC = YES or NO**. *After enabling FAC, the next screen will allow the FAC set point to be configured. FAH set point range is between 60.0°F to 90.0°F.*

Heating is energized when discharge air temperature falls below FAH set point and terminates when the discharge air temperature rises above the set point plus the heating dead-band (FAH default). Cooling is energized when discharge air temperature rises above FAC set point and terminates when the discharge air temperature falls below the set point minus the cooling dead-band (Parameter 171, 10°F default). Fresh air tempering will operate up to four stages of heating and cooling to maintain discharge air temperature. Standard heating and cooling demands will override FAT heating and cooling demands. Also, when Parameter 113 (EN RET AIR TMP LMT) is set to 1 (ENABLE), the return air temperature limits set in Parameter 114 (COOL RET AIR LIMIT) and 115 (HEAT RET AIR LIMIT) are enforced on FAT operation as well.

NOTE: *On Model L Ultra-High Efficiency 3 to 6-ton units, the unit controller modulates the variable speed compressor to maintain the desired discharge air temperature.*

IMPORTANT

For fresh air tempering modes to operate properly, the RT6 discharge sensor must be relocated to the supply air duct.

20.1.3.4. Discharge Air Cooling Reset Operation

Discharge air cooling reset operation saves energy by gradually increasing the discharge air set point as outside air temperature decreases. This operation also reduces the potential for over-cooling if the zoning system is misapplied, has an abnormal condition, or has a dominant zone. The M4 unit controller has various Advanced discharge air cooling reset options which can be selected at start up and are based on either return air temperature, outside air temperature, or both return and outdoor air temperature.

20.1.3.5. Discharge Air Heating Reset Operation

Discharge air heating reset operation saves energy by gradually decreasing the discharge air set point as outside air temperature increases. This operation reduces the potential for overheating if the zoning system is misapplied, has an abnormal condition, or has a dominant zone. The M4 unit controller has various advanced discharge air heating reset options which can be selected at start up and are based on either return air temperature, outside air temperature or both return and outdoor air temperature.

20.1.3.6. Damper Position Control of Exhaust Fan (Building Pressure)

Model L units can control building static pressure with either a standard or high static power exhaust fan. Each fan type is available in either a 50% (one fan) or 100% (two fans) configuration. Standard static power exhaust fans use a propeller while high static power exhaust fans use a centrifugal blower. All units featuring power exhaust fans must also have an economizer.

Control of the fans can occur based on damper position or building differential static pressure transducers located outside the building and in the return duct. Control of power exhaust fans can occur through the M4 unit controller, third-party device or separate M4 unit controller.

20.2. CAV Units in Single-Zone Applications with a Lennox Room Sensor

20.2.1. Unit Controller Operation (4-Heat / 4-Cool)

When using a Lennox room sensor with the M4 unit controller operating in room sensor mode, a packaged rooftop unit can provide up to four stages each of mechanical heating and cooling operation. The room sensor provides space temperature information to the M4 unit controller. The M4 unit controller houses all space temperature set points and controls all rooftop unit staging and general operation functions. The M4 unit controller also determines unit error codes, provides diagnostic information and maintains safe operation limits.

20.2.2. Ventilation Demand

When the M4 unit controller is in room sensor control mode, the user has several different ventilation sequence of operation scenarios to choose from. The default mode causes the M4 unit controller to activate the supply fan when both a ventilation and either heating or cooling demand are present. This occurs independent of receiving an occupied demand. The user can change the default setting to allow the supply fan to run continuously when the M4 unit controller receives both a ventilation and occupied demand. This is independent of a call for either heating or cooling. When the M4 unit controller receives a ventilation demand and occupied demand is not present, the M4 unit controller will only activate the supply fan when it receives either a heating or cooling demand.

20.2.3. Cooling Demand

The M4 unit controller directly monitors space temperature through the room sensor. Based on this information, the M4 unit controller activates the different compressor stages to maintain the desired occupied space temperature set point. Increasing compressor stages provides more cooling capacity while decreasing compressor stages provides less cooling capacity. The M4 unit controller has direct control over the rooftop unit mechanical cooling staging operation. The user has the option to configure the M4 unit controller so that if the room sensor fails, the M4 unit controller can use a backup operation to control unit operation.

Some rooftop models feature up to four separate compressors and refrigeration circuits that can provide up to four stages of mechanical cooling operation.

For stage one operation, the M4 unit controller activates the first compressor (25% of total unit capacity). For stage two operation, the M4 unit controller activates the second compressor (50% unit capacity). For stage three operation, the M4 unit controller activates the third compressor (75% total unit capacity). For stage four operation, the M4 unit controller activates the fourth compressor (100% unit capacity). Depending on the room sensor configuration setting, occupants in the space can change the set point. The M4 unit controller automatically recognizes this change and instructs the unit to respond accordingly.

NOTE: *Model L Standard and high efficiency 3- to 5-ton units and the 074S units use a two-step compressor (two speeds for cooling application) and must have two-stage cooling inputs from a thermostat, third-party DDC control or third-party DDC electronic thermostat module control.*

20.2.4. Cooling Demand with Economizer

If the outdoor air is suitable for free cooling and the unit has an economizer, the M4 unit controller will open the economizer and use fresh air for stage one cooling. For stage two cooling operation, the M4 unit controller activates the first compressor. For stage three cooling operation, the M4 unit controller activates the second compressor. For stage four cooling operation, the M4 unit controller activates the remaining compressors (number three and four). The M4 unit controller has direct control over the rooftop unit mechanical cooling staging and economizer operation.

20.2.5. Heating Demand (General Operation)

The M4 unit controller directly monitors space temperature through the room sensor. Based on this information, the M4 unit controller turns on or off the heating stages to maintain the desired temperature set point. Increasing heating stages provides additional heating capacity while decreasing heating stages provides less heating capacity. The M4 unit controller has direct control over rooftop unit mechanical heating staging operation. Some units feature four separate heating stages that can provide up to four stages of mechanical heating operation. The specific heating capacity varies for each stage depending on the heat source. Depending on the room sensor configuration setting, occupants in the space can change the set point. The M4 unit controller automatically recognizes this change and instructs the unit to respond accordingly.

20.2.6. Heating Demand (Electric)

Model L and Strategos units feature multiple electric heat sections available in sizes from 7.5 kW to 180 kW (depending on unit size and voltage). Units can provide up to four stages of mechanical heating depending on the size of the electric heater. Staged operation occurs similar to cooling operation, with the M4 unit controller activating or deactivating sections of the electric heater as the demand for heat increases or decreases.

20.2.7. Humiditrol Dehumidification Operation - Dehumidification Demand

Upon a dehumidification only demand, the M4 unit controller activates various compressors depending on model for reheating. At the same time, the M4 unit controller will use the solenoid valve(s) to divert hot gas from the compressor(s) to the reheat coil.

The cooled and dehumidified air from the evaporator is then reheated as it passes through the reheat coil. The de-superheated and partially condensed refrigerant continues to the outdoor condenser coil where condensing is completed. The reheat coil is sized to offset most of the first and second stages of sensible cooling effect during reheat only operation. This reduction in sensible cooling capacity extends compressor run time to control humidity when cooling loads are light. The unit continues to operate in this mode until the dehumidification demand is satisfied. A heating demand terminates reheat operation. The M4 unit controller relative humidity set point is set at the factory for 60% and can be adjusted at the M4 unit controller or with the L Connection Network unit controller Software. For Network Control Panel (Network Control Panel) applications, the humidity set point can be adjusted at the Network Control Panel. The M4 unit controller also has an option for an external digital input for the dehumidification demand. This demand must be provided from an external third-party controller.

For unit model specific details, refer to the unit installation instruction.

20.2.8. Humiditrol Dehumidification Operation - Cooling Demand Only

The unit will operate conventionally whenever there is a demand for cooling and no dehumidification demand. The unit can provide up to four stages of mechanical cooling in this scenario. Free cooling is only permitted when an economizer is present, there is no demand for dehumidification and the outdoor air is suitable for this function.

20.2.9. Humiditrol Dehumidification Operation - Cooling and Dehumidification Demand

- Stage one cooling and dehumidification demand: The system activates various number of compressors depending on model plus reheat. This provides approximately 75% humidity removal capacity plus 25% cooling capacity.
- Stage two cooling and dehumidification demand: The system activates all compressors plus reheat. This provides 100% humidity removal capacity plus approximately 50% cooling capacity.
- Stage three cooling and dehumidification demand: The system activates all compressors. If there is a fourth compressor, it along with the reheat coil will cease operation. This provides approximately 75% of humidity removal capacity and 75% cooling capacity.
- Stage four cooling and dehumidification demand: The system activates all compressors. This will provide 100% humidity removal capacity and 100% cooling capacity.

NOTE: *For unit model specific details, refer to the unit installation instruction.*

20.3. CAV Units in Single-Zone Applications — Wired Thermostat or Third-Party Unit Controller

20.3.1. Unit Controller Operation (2-Heat / 2-Cool)

When using a two-stage heat/ cool thermostat or third-party temperature control with the M4 unit controller in the thermostat mode, a packaged rooftop unit can provide up to two stages of mechanical heating and cooling operation. To operate correctly, a thermostat or third-party temperature control must provide the following wiring connections to the M4 unit controller:

a. Ventilation demand

b. Occupied demand

c. Heating demand one

d. Heating demand two

e. Cooling demand one

f. Cooling demand two

In this set up, either the thermostat or third-party temperature control handling the rooftop unit staging and general operation. The M4 unit controller functions primarily to determine unit error codes, provide diagnostic information and maintain safe operation limits.

20.3.1.1. Ventilation Demand

Upon receiving a ventilation demand from the thermostat or third-party temperature control, the M4 unit controller instructs the supply fan to start operation. The supply fan runs at full capacity as long as a ventilation demand is present.

20.3.1.2. Cooling Demand

Upon receiving a stage one demand for cooling from the thermostat or third-party temperature control, the M4 unit controller activates the required number of compressors to provide 50% cooling capacity.

If the unit is unable to satisfy the call for cooling within a specified time period and receives a stage two cooling demand from the thermostat or third-party temperature control, the M4 unit controller activates additional compressors in order to provide 100% cooling capacity. The thermostat or third-party controller has direct control over the rooftop unit's staging capability.

NOTE: *For unit model specific details, refer to the unit installation instruction.*

20.3.1.3. Cooling Demand With Economizer

If the unit features an economizer and outdoor air is suitable for free cooling, a call for stage one cooling will activate the economizer. The unit will try to satisfy the cooling demand using outdoor air rather than mechanical cooling.

If the unit is unable to satisfy the call for cooling within a specified time period using the economizer and receives a stage two call for cooling from the thermostat or third-party temperature control, the M4 unit controller will activate another compressor or compressors (model dependent). This will provide 100% cooling capacity. It is important to note that the thermostat or third-party temperature control has direct control over the rooftop unit's staging capability. While the M4 unit controller typically has direct control over the economizer, it is possible for a thermostat or third-party temperature control to directly control this functionality.

NOTE: *For unit model specific details, refer to the unit installation instruction.*

20.3.1.4. Heating Demand (General Operation)

Upon receiving a stage one heating demand from the thermostat or third-party temperature control, the M4 unit controller activates the unit's heating section to start operation. This activates the first two stages of gas heat if applicable, providing approximately 66% heating capacity.

If the unit is unable to satisfy the call for heating within a specified time period and receives and can support stage two heating demand from the thermostat or third-party controller, the M4 unit controller activates the third and fourth stages of heat if available, providing 100% heating capacity. It is important to note that the thermostat or third-party controller has direct control over the rooftop unit's staging capability.

NOTE: *For unit model specific details, refer to the unit installation instruction.*

20.3.1.5. Heating Demand (Electric)

Units feature multiple electric heat sections available in sizes from 7.5 kW to 180 kW (depending on unit size and voltage). Units can provide up to two stages of electric heating depending on the size of the electric heater. Staged operation occurs similar to cooling operation, with the thermostat or third-party controller activating or deactivating sections of the electric heater as the demand for heat increases or decreases.

20.3.1.6. Humiditrol Dehumidification Operation - Dehumidification Demand

Upon a dehumidification demand, the M4 unit controller activates compressor number one (compressor two if applicable). At the same time, the M4 unit controller activates solenoid valves to divert hot gas from compressor one (and compressor 2 if applicable) to the reheat coil. The cooled and dehumidified air from the evaporator is then reheated as it passes through the reheat coil. The de-superheated and partially condensed refrigerant continues to the outdoor condenser coil where condensing is completed. The reheat coil is sized to offset most of the first and second stages (if applicable) of sensible cooling effect during reheat only operation. This reduction in sensible cooling capacity extends compressor run time to control humidity when cooling loads are light.

The unit will continue to operate in this mode until the dehumidification demand is satisfied. A heating demand will terminate reheat operation.

The M4 unit controller relative humidity set point is factory configured for 60% and can be adjusted at the M4 unit controller or with the L Connection Network unit controller software. For Network Control Panel (Network Control Panel) applications, the humidity set point can be adjusted at the Network Control Panel. The M4 unit controller also has an option for an external digital input to signal the dehumidification demand. This demand must be provided from an external third-party DDC.

NOTE: *For unit model specific details, refer to the unit installation instruction.*

20.3.1.7. Humiditrol Dehumidification Operation - Cooling Demand Only

The unit operates conventionally whenever there is a demand for cooling and no dehumidification demand. The unit can provide up to two stages of mechanical cooling in this scenario. Free cooling is only permitted when an economizer is present, there is no demand for dehumidification and outdoor air is suitable for this function.

20.3.1.8. Humiditrol Dehumidification Operation - Cooling and Dehumidification Demand

Stage one cooling demand with dehumidification demand: If both a dehumidification demand and a first stage cooling demand occur, the system activates all applicable compressors plus the first-stage of reheat. This provides 100% humidity removal capacity with approximately 50% cooling capacity.

Stage two cooling demand with dehumidification demand: A demand for second-stage cooling activates all compressors plus terminates any reheat operation. This provides 100%

humidity removal capability and 100% cooling capacity. The M4 unit controller activates all compressors until the cooling demand is satisfied.

20.3.2. Discharge Air Temperature Control (4-Heat / 4-Cool)

20.3.2.1. Unit Controller Operation

When using a thermostat or third-party controller with the M4 unit controller operating in the thermostat mode configured for discharge air temperature control, a packaged rooftop unit can provide up to four stages of mechanical heating and cooling operation.

To operate correctly, a thermostat or third-party controller must provide the following wiring connections to the M4 unit controller:

- Ventilation demand
- Occupied demand
- Heating demand
- Cooling demand

In this configuration the M4 unit controller will control the rooftop staging and general operation. The thermostat or third-party controller only informs the M4 unit controller if there is a specific demand.

EXAMPLE: *If the thermostat or third-party controller passes along a demand for cooling, the controller increases or decreases cooling stages to maintain the discharge supply air temperature set point. Along with providing control of the rooftop unit, the M4 unit controller also provides error codes, diagnostic information and maintains safe operating limits.*

20.3.2.2. Ventilation Demand

Upon receiving a ventilation demand from the thermostat or M4 unit controller, the M4 unit controller activates the supply fan. The supply fan operates at 100% capacity until the ventilation demand has been removed.

20.3.2.3. Cooling Demand

Upon receiving a cooling demand from the thermostat or M4 unit controller, the M4 unit controller instructs the unit to maintain a cooling discharge air temperature set point. The M4 unit controller has direct control over the rooftop unit staging. The discharge supply air temperature set point resides in the M4 unit controller, has a factory default setting, and can be adjusted at start-up. The user can adjust the set point either locally or remotely with Lennox L Connection Network unit controller software or at the M4 unit controller. The user can not adjust the set point through a a third-party control device or software program.

The M4 unit controller receives discharge supply air temperature information directly from the temperature sensor, located in the supply duct system. Based on this information, the M4 unit controller activates the different compressor stages to maintain the discharge supply air temperature set point (55°F default). Increasing compressor stages provides more cooling capacity while decreasing compressor stages provides less cooling capacity.

Model L and Strategos units feature four separate compressors and refrigeration circuits that can provide up to four stages of mechanical cooling operation.

- For stage one operation, the M4 unit controller activates the first compressor (25% of total unit capacity).
- For stage two operation, the M4 unit controller activates the second compressor (50% unit capacity).
- For stage three operation, the M4 unit controller activates the third compressor (75% total unit capacity).
- For stage four operation, the M4 unit controller activates the fourth compressor (100% unit capacity).

20.3.2.4. Cooling Demand With Economizer

If outdoor air is suitable for free cooling and the unit has an economizer, the M4 unit controller opens the economizer and uses fresh air for stage one cooling.

- For stage two operation, the M4 unit controller activates one compressor.
- For stage three operation, the M4 unit controller activates a second compressor.
- For stage four operation, the M4 unit controller activates the remaining compressors (number three and four).

The M4 unit controller has direct control over the rooftop unit staging and economizer operation.

20.3.2.5. Heating Demand (General Operation)

Upon receiving a heating demand from a thermostat or a third-party controller, the M4 unit controller instructs the unit to maintain a heating discharge air temperature set point. The M4 unit controller has direct control over the rooftop unit heating staging operation. The M4 unit controller receives discharge supply air temperature information directly from the temperature sensor located in the supply duct. Based on this information, the M4 unit controller activates the different heating stages to maintain the discharge supply air temperature set point (110°F default). Turning on additional heating stages increases the heating capacity, while turning off heating stages decreases the heating capacity. The heating discharge air temperature set point resides in the M4 unit controller, has a factory default setting, and may be adjusted at start up. The user can adjust the set point either locally or remotely with Lennox L Connection Network unit controller software or at the M4 unit controller. The user can not adjust the set point through a third-party control device or software program.

20.3.2.6. Heating Operation (Electric)

Units feature multiple electric heat sections available in sizes from 7.5 kW to 180 kW (depending on unit size and voltage). Units can provide up to four stages of mechanical heating depending on the size of the electric heater. Staged operation occurs similar to cooling operation, with the M4 unit controller activating or deactivating sections of the electric heater to maintain the discharge air temperature set point.

20.3.3. Bypass Zoning Applications (2-Heat / 2-Cool)

20.3.3.1. Unit Controller Operation

When using a third-party M4 unit controller and the M4 unit controller is operating in the thermostat mode, a packaged rooftop unit can provide up to two stages of mechanical heating and cooling operation. To operate correctly, a M4 unit controller must provide the following wiring connections to the M4 unit controller:

a. Ventilation demand

b. Occupied demand

c. Heating demand one

d. Heating demand two

e. Cooling demand one

f. Cooling demand two

In this configuration the third-party controller will control the rooftop unit staging and general operation. The M4 unit controller functions primarily to determine unit error codes, provide diagnostic information and maintain safe operating limits.

20.3.3.2. Unit Sequence Of Operation

Constant air volume units in bypass zoning applications featuring a Lennox or third-party controller with the M4 unit controller operating in thermostat mode, have the same basic heating and cooling unit sequence of operations as constant air volume units in single-zone applications featuring a third-party controller, with the M4 unit controller operating in thermostat mode. For specific information, refer to “20.3. CAV Units in Single-Zone Applications — Wired Thermostat or Third-Party Unit Controller” on page 60.

The following sequence of operation information is specific to constant air volume units in bypass zoning applications.

20.3.3.3. Supply Duct Bypass Damper

To maintain accurate supply duct static pressure control, constant volume units in bypass zoning applications use a bypass damper between the supply and return air ducts. In this scenario, the supply duct static pressure transducer and damper connect directly to the M4 unit controller. Based on actual static pressure relative to set point, the M4 unit controller either modulates open or closes the damper. If the damper closed, the static pressure in the supply air duct increases. If the damper modulates further open, the static pressure in the supply air duct decreases.

20.3.4. Bypass Zoning Applications (4-Heat / 4-Cool)

20.3.4.1. Unit Controller Operation

When using a third-party controller and the M4 unit controller is operating in thermostat mode and configured for discharge air temperature control, a packaged rooftop unit can provide up to four stages of mechanical heating and cooling operation. To operate correctly, a third-party controller must provide the following wiring connections to the M4 unit controller:

- Ventilation demand
- Occupied demand
- Heating demand
- Cooling demand

In this configuration, the M4 unit controller controls the rooftop staging and general operation. The third-party controller only informs the M4 unit controller as to whether or not there is a specific demand.

EXAMPLE: *If the third-party controller passes along a demand for cooling, then the M4 unit controller increases or decreases cooling stages to maintain the discharge supply air temperature set point. Along with controlling the rooftop unit, the M4 unit controller also determines error codes, provides diagnostic information and maintains safe operating limits.*

20.3.4.2. Unit Sequence of Operation

Constant air volume units in bypass zoning applications featuring a third-party controller with the M4 unit controller operating in thermostat mode, configured for discharge air temperature control have the same basic heating and cooling unit sequence of operations as constant air volume units in single-zone applications featuring a third-party controller, with the M4 unit controller operating in thermostat mode with discharge air temperature control.

For specific unit sequence of operation information refer “20.3. CAV Units in Single-Zone Applications — Wired Thermostat or Third-Party Unit Controller” on page 60 and “16. Discharge Air Control” on page 49.

The following sequence of operation information is specific to constant air volume units in bypass zoning applications.

20.3.4.3. Supply Duct Bypass Damper

To maintain accurate supply duct static pressure control, constant volume units in bypass zoning applications typically feature a bypass damper between the supply and return air ducts. In this scenario, the supply duct static pressure transducer and damper connect directly to the M4 unit controller. Based on actual static pressure relative to set point, the M4 unit controller either modulates open or modulates closed the bypass damper.

If the damper modulates further closed, the static pressure in the supply air duct increases. If the damper modulates further open, the static pressure in the supply air duct decreases.

21. Modulating Gas Valve

MGV is offered only on E-Box models. Units equipped with optional modulating gas valves (MGV) contain two modulating gas valves in addition to two standard gas valves. M4 unit controller sends 0-10VDC through add-on G3 control (A187_P348-5) to the MGVs.

The M4 will control modulating gas valves to maintain 110°F (default) discharge air during the heating cycle. The left heat section will operate when 25-50% of nameplate heat is needed. Both heat sections will operate when 50-100% of the name plate heat is needed.

The normally open MGV will allow full heating capacity should the MGV fail.

The 0-10VDC output to the MGVs increases to modulate the valves further closed during a reduced heating demand. The 0-10VDC output to the MGVs decreases to modulate the valves further open during a higher heating demand.

Heating Demand Reduces	→	M4 Output to MGVs increases	→	MGVs Modulate Further Closed	→	Heating Output Lowers
Heating Demand Increases	→	M4 Output to MGVs Reduces	→	MGVs Modulate Further Open	→	Heating Output Increases

See Parameters 392 through 400 for additional settings.

Parameter 358

Algorithm Y for Input Sources 7-15:
0- Hysteresis loop
- On when input > = set point[1]
- Off when input < set point[1] - dead-band percentage (P 363)

1- Window
- On when input is in range > = setpoint[1] and < = set point[1] + dead-band percentage (P 363)

2- Delayed-on
- Timer (P 364 seconds) is started when input is > set point (output remains off)
- Timer continues to run until: Input is < set point – dead_band (P 363) (delayed – on aborted)
- Or timer expires (output goes on)
- Output continues on until input < set point – dead-band.

3- Delayed-off
- On when input is > set point[1].
- Off when input is < set point[1] – dead-band percentage (P 363) for > P364 seconds.
- Output goes on when input > setpoint
- Timer is started when input is < set point - deadband
- Timer continues to run until: Input is > set point (output continues on, delayed–off aborted) or timer expires (output goes off).

Inversion Z:
0 - Output not inverted.
1 - Output inverted
***NOTE**: P indicates parameter.*
[1] Indicates that the set point could be parameters 359, 360, 361 or 362.

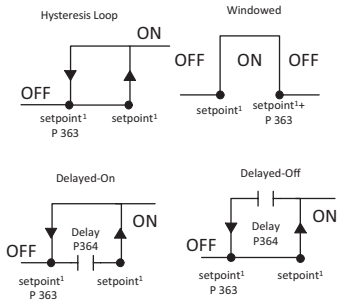

Figure 32. Algorithm Y for Input Sources 7 - 15 (Parameter 358)

Parameter 365

Algorithm Y for Input Sources 7-15:
0- Hysteresis loop
- On when input > = set point[1]
- Off when input < set point[1] - dead-band percentage (P 370)

1- Window
- On when input is in range > = setpoint[1] and < = setpoint[1] + dead-band percentage (P 370)

2- Delayed-on
- Timer (P371 seconds) is started when input is > set point (output remains off)
- Timer continues to run until: Input is < setpoint – dead_band (P370) (delayed – on aborted)
- Or timer expires (output goes on)
- Output continues on until input < setpoint – dead-band

3- Delayed-off
- On when input is > setpoint[1].
- Off when input is < set point[1] – dead-band percentage (P 370) for > P371 seconds.
- Output goes on when input > setpoint
- Timer is started when input is < setpoint - deadband
- Timer continues to run until: Input is > setpoint (output continues on, delayed–off aborted) or timer expires (output goes off).

Inversion Z:
0 - Output not inverted.
1 - Output inverted
***NOTE**: P indicates parameter.*
[1] Indicates that the set point could be parameters 366, 367, 368 or 369.

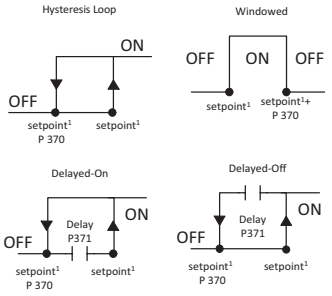

Figure 33. Algorithm Y for Input Sources 7 - 15 (Parameter 365)

22. Events and Alarms

22.1. Phase - Voltage Detection

The M4 unit controller has the ability to detect that the rooftop unit power source has the correct frequency, phasing and voltage levels. When this feature is enabled, the detection of frequency and phasing is determined at power-on and the voltage level is continuously monitored. If any of these is out of range, then an alarm is logged and the rooftop unit operation is locked out.

a. Alarms Detected at Power-On Start up:
- 121 - LINE FREQ DOES NOT MATCH UNIT CONFIG
- 126 - LINE PHASING DOES NOT MATCH UNIT CONFIG

b. Alarms - Continuously Monitoring
- 122 - 24VAC PRIMARY VOLTAGE LOW
- 123 - 24VAC PRIMARY VOLTAGE HIGH
- 134 - 24VAC SECONDARY VOLTAGE LOW
- 125 - 24VAC SECONDARY VOLTAGE HIGH

Alarms 122 through 125 are auto-resetting. The rooftop operation will be restored five (5) minutes after the proper voltage levels are restored. Alarms 121 and 126 requires removing the power and correcting the issue before restoring the rooftop operation

The frequency (60 or 50 Hz) and the phasing (single or three-phase) of the power source is determined by the model number stored in the M4 unit controller. This model number and enabling/disabling the Phase-Voltage Detection feature can be modified through the M4 unit controller user interface. See the CORE Unit Controller setup guide for instructions on how to configure the Configuration ID 2, Position 5. Options are:
- **N** = NOT INSTALLED
- **1** = ENABLED INTERNAL (LENNOX)
- **2** = EXTERNAL (A42) PHASE DETECTION ON DI-2
- **3** = EXTERNAL (A42) PHASE DETECTION ON DI-3

When an event occurs, the M4 unit controller will display a code which corresponds to control function. Error codes are stored and can be recalled later. See the Installation & Setup Guide For The M4 unit controller for information about viewing and silencing the alarms via the user interface.

NOTE: *Any references in the user interface referencing Advanced Airflow actually indicates Smart Airflow®.*

22.2. Service Relays

Selected alarms (marked with * in table result in the closure of the service relay contacts (DO1). The contacts remain closed until the CORE Control System resets, or alarm condition is cleared AND alarm status is read via explicit S-BUS command.

22.3. Service Relay Operation

The M3 unit controller Service Relay output (A55_P298-8) default operation indicates that service is required.

If the default operation is not required, the Service Relay output may be used as a control output. Use Parameter 186 to choose the input which will trigger the Service Relay output. The formula X + (32 x Y) + (16 x Z) is used to select the option.

If Parameter 186 input sources 7-9 are used, the set point and dead-band must be set with Parameter 187, Parameter 188, Parameter 189, Parameters 190, 191 and 192.

22.4. System Relative Humidity Options

Table 54. System Relative Humidity Options

Option	Description
0 - Hysteresis	• ON when relative humidity is equal to or greater than Parameter 188 setting. • OFF when relative humidity is less than Parameter 188 setting minus Parameter 191.
1 - Window	• ON when relative humidity is within range. • Parameter 188 plus Parameter 191. NOTE: Fixed 3% relative humidity hysteresis on options 1 - 3
2 - Delayed ON	Only ON when relative humidity is greater than Parameter 188. Otherwise service delay will be OFF.
3 - Delayed OFF	When relative humidity falls below Parameter 188 the service delay is turned OFF once Parameter 193 setting (seconds) is reached

22.5. System Indoor Air Quality / Carbon Dioxide Options

Table 55. System IAQ / Carbon Dioxide Options

Option	Description
0 - Hysteresis	• ON when indoor air quality/carbon dioxide is greater than Parameter 187 setting. • OFF when indoor air quality/carbon dioxide is less than Parameter 187 minus Parameter 190 setting.
1 - Window	• ON when indoor air quality/CO_2 within range. • Parameter 187 (SRV OUTPT SP CO_2) plus Parameter 190.
2 - Delayed ON	ON when indoor air quality/CO_2 is greater than Parameter 187. Otherwise service delay will be OFF.
3 - Delayed OFF	When indoor air quality/CO_2 falls below Parameter 187 the service delay is turned OFF once Parameter 193 setting (seconds) is reached.

22.6. System Outdoor Air Temperature Operation

Table 56. System Outdoor Air Temperature Operation Options

Option	Description
0 - Hysteresis	• ON when outdoor air temperature is greater Parameter 189 setting. • OFF when outdoor air temperature is less than Parameter 189 setting
1 - Window	• ON when outdoor air temperature is within range. • Parameter 189 plus Parameter 192.
2 - Delayed ON	ON when outdoor air temperature is greater than Parameter 189 setting. Otherwise service delay will be OFF.
3 - Delayed OFF	When outdoor air temperature falls below Parameter 189 the service delay is turned off once Parameter 193 setting (seconds) is reached.

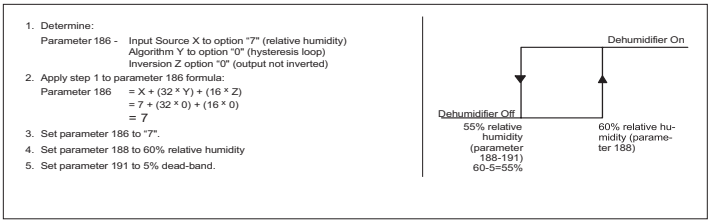

Figure 34. Example 1 — Service Output Energizes Dehumidifier at 60% Relative Humidity / Turns Off at 55% Relative Humidity

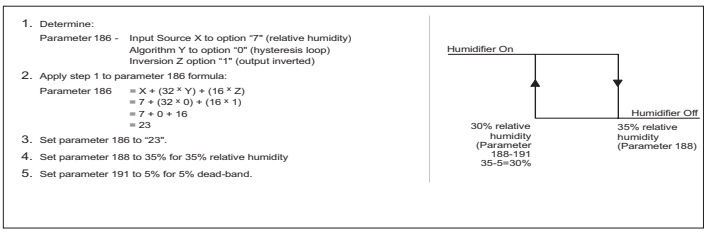

Figure 35. Example 2 — Service Output Energizes Dehumidifier at 30% relative humidity / Turns Off at 35% Relative Humidity

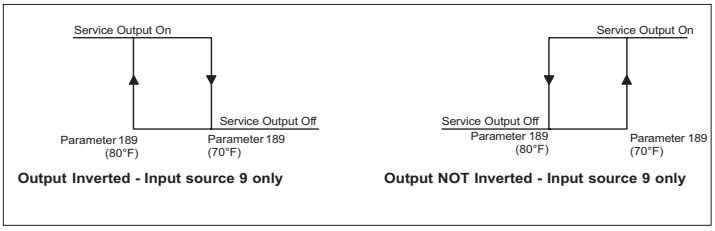

Figure 36. Outdoor Air Temperature Operation - Service Output Energized

NOTE: *Use the service output to energize at 80°F and off at 70°F (inverted) and the service output operation being energized at 70°F and off at 80°F (not inverted.*

IMPORTANT

This applies to input source option 9 (Outdoor Air Temperature) on Parameter 186.

23. Unit Operation

This section describes the display and control buttons, how to configure the unit, and how to read stored configuration data, status, and alarms.

The CORE Unit Controller is an input and output junction point. If in the thermostat mode, thermostat inputs at P297 result in an output to unit components. If the heartbeat LED is not flashing, see "Table 3. LED Operation Indicators" on page 7 for heartbeat operation. If the display shows an alarm. If the thermostat input indicating lights are not responding appropriately, check the thermostat or a DDC control acting as thermostat inputs into P297.

Basic cooling and heating functions may be energized to test major unit components by using the CORE Unit Controller testing function or by using jumper wires on the Field Wiring Termination plug P297.

24. CORE Service App Menu Selection Overview

Refer to "29. CORE Service App RTU Menu" on page 67 for details for Setup, Data, Service and Settings options.

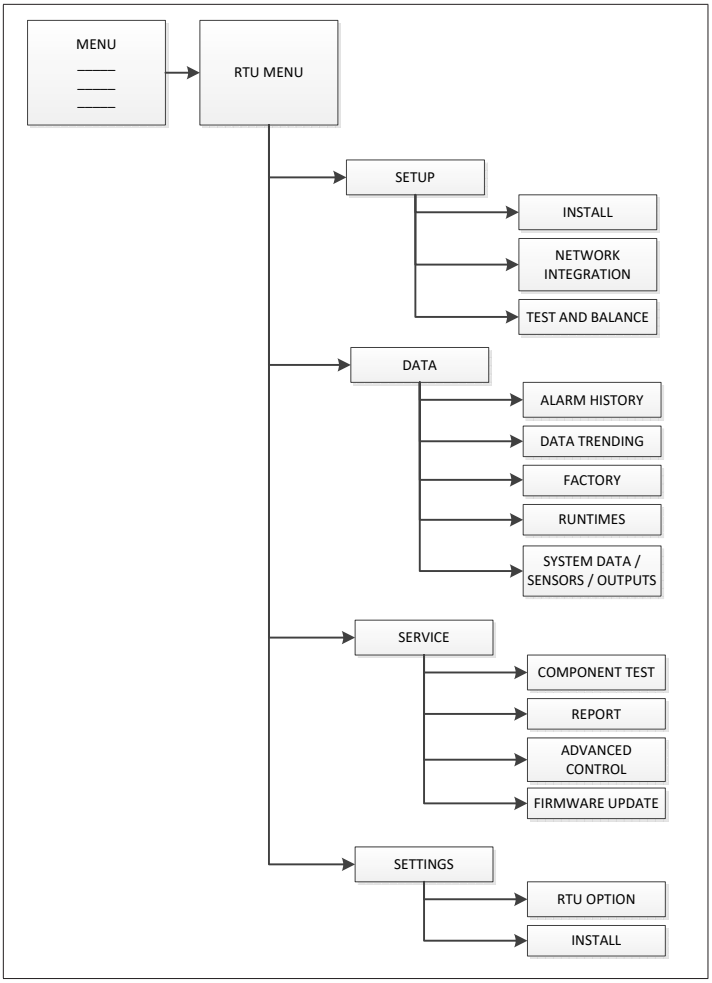

25. Pairing CORE Service App to CORE Unit Controller

- The mobile application is compatible with the CORE Unit Controller.
- The mobile application can discover the CORE Unit Controller if within 50 feet of the mobile device being used.
- The mobile application will list the units by signal strength.
- The unit friendly name is displayed.
- Select the desire unit from the discovery list. The four digit code desired on the unit will show the code listed in the discovery list.
- Once the unit has been selected, connection should be established to your device within 10 seconds.
- Information displayed once pairing is completed will be RTU name, model number, serial number and firmware version.

26. System Overview - Room Sensor Mode

a. The system overview shall put emphasis on the zone temperature and RH.

- The zone temperature / rh indicates a "_ _" if out of range.
- The RH value will not appear if not configured.

b. The system overview in room sensor mode places emphasis on the current operating modes.

c. The system overview indicates all active operating modes with a priority on heating and cooling associated modes.

NOTE: *If dehumidification mode is active, this is displayed, and not cooling for example,*

d. The system overview lists the following parameters at the top of the screen:

- Return Temperature
- Discharge Temperature
- Setpoints (Heating and Cooling)
- Network Status
- The system overview shall also indicate:
- Occupancy
- RH setpoint (if applicable)
- Outdoor Air Temperature
- Damper Position (if equipped)
- Active Alerts

e. Additional Settings

- PreInstall
- Test
- Smoke
- Off on Alarm
- Delay up to 5 minutes
- Delay up to 20 seconds
- Start up
- Low Ambient Lockout
- Morning Warm-Up
- Pre-Cool
- Free Cooling
- Cooling
- Heating
- Dehumidification
- Fresh Air Cooling
- Fresh Air Heating
- Cool + Max Open Economizer
- Cool + Modulate Economizer
- Compressor Load Shedding
- Blower On - OAS
- Blower On
- No Demand - OAS

27. Active Alarms

- The mobile app will display other alarm information such as time of occurrence, and troubleshooting information.
- The mobile application will indicate all alarm information per the active alarm requirements.
- The mobile application will indicate the number of

occurrences of a past alarm in the past thirty (30) days.

- For alarm details, go to “31. Alarms” on page 89.

28. CORE Service App General Menu + User Preference

- This screen allows the user to set the temperature units (ºF or ºC).
- Allows the user to set the screen mode, options are dark or light modes.

29. CORE Service App RTU Menu

The following options are available under this menu selection:

29.1. Setup

29.1.1. Install

This section includes the following:

- Date and time and the option to use the mobile device data and time setting.
- RTU Name
- Model Number (see “Figure 37. Model Number”) and serial number. Model , serial and catalog numbers are located on the RTU nameplate.
- RTU Information. Configuration ID 1 and 2 can be entered here. See figures “Figure 38. Configuration ID 1” on page 67 and “Figure 39. Configuration ID 2” on page 68 for further details.

This section addresses the requirement that specific configuration information must be completed using the SETUP / INSTALL feature if a new unit controller was being installed. Other requirements are the addition of accessories that were not factory-installed. Model number, configuration ID 1 and 2, catalog number, serial number and RTU description are all key items required to be completed for the system to operate correctly. Running the SETUP / INSTALL wizard allows the installer to verify that all fields have been completed as required.

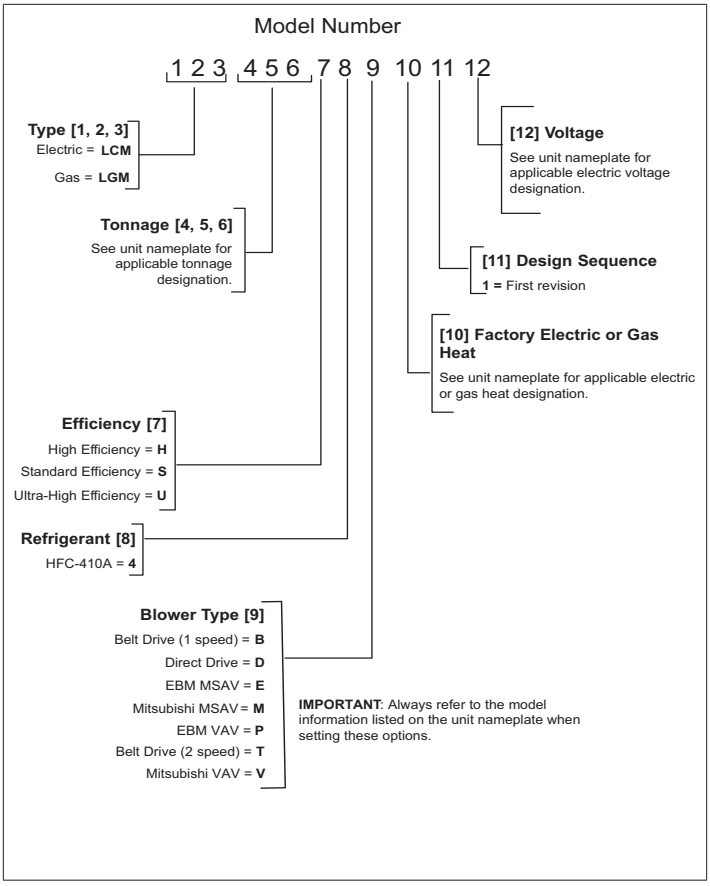

Figure 37. Model Number

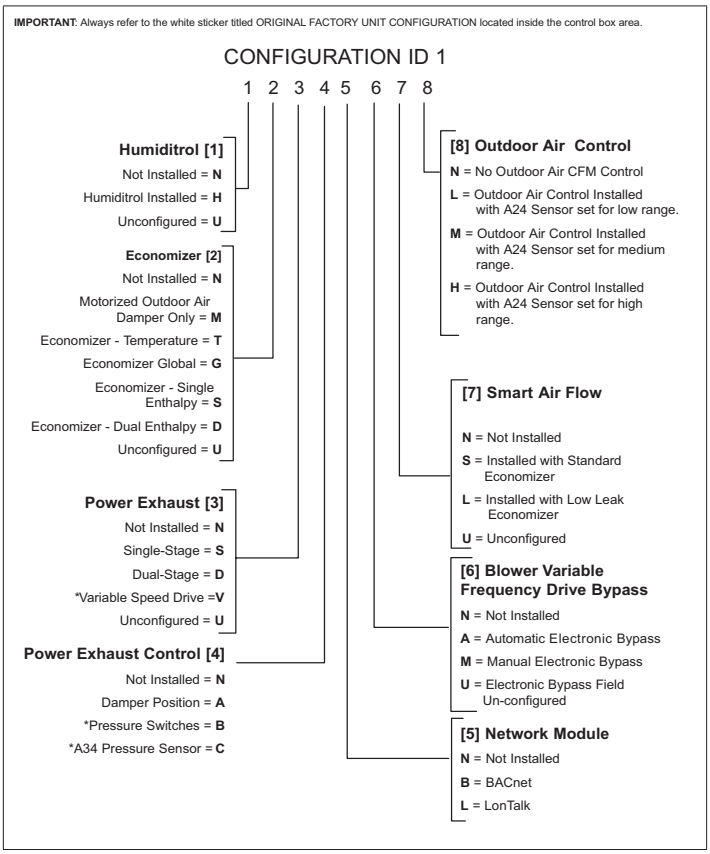

Figure 38. Configuration ID 1

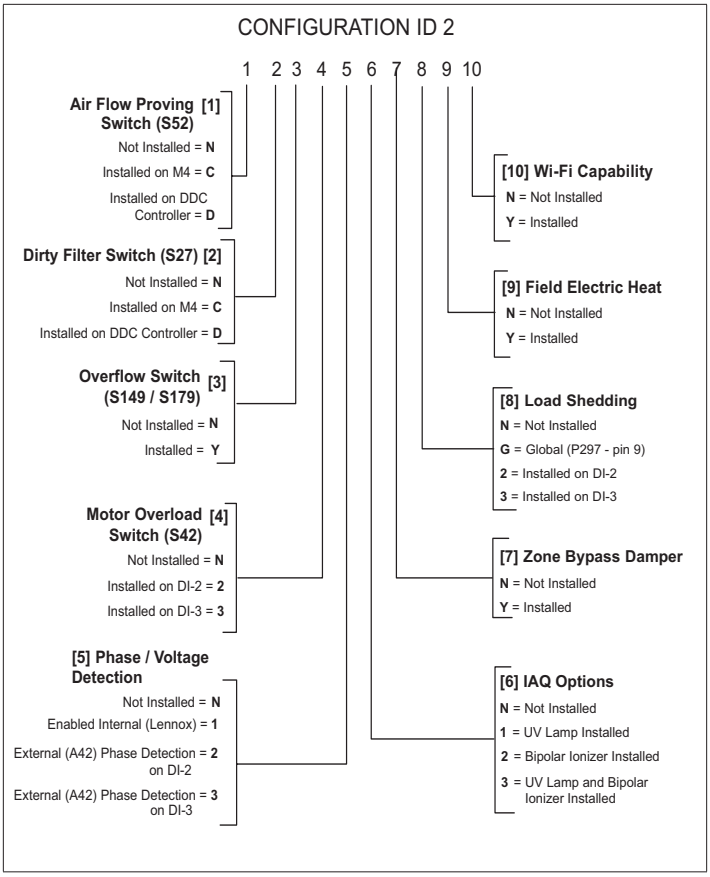

Figure 39. Configuration ID 2

29.1.2. Install Menu Navigation

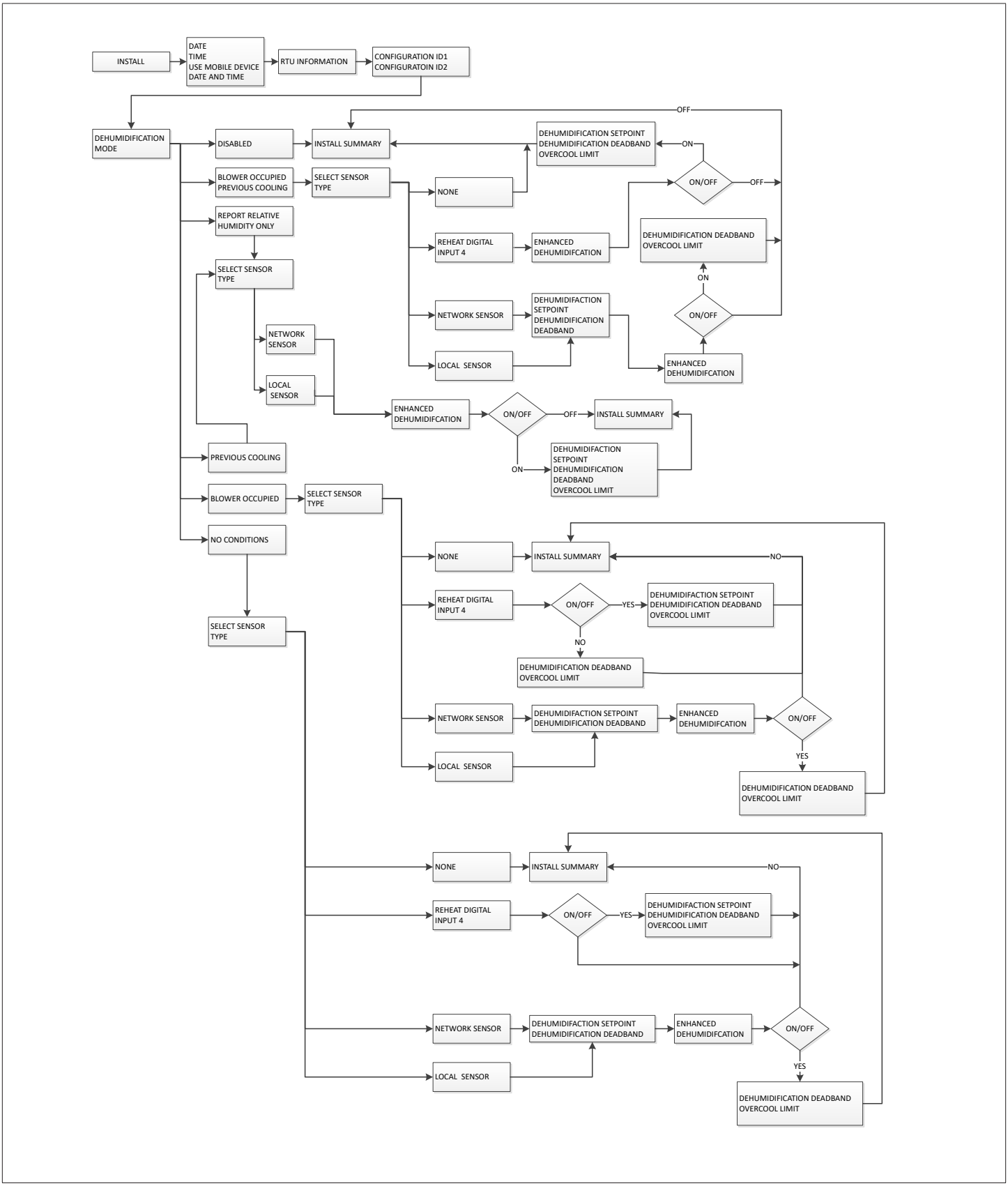

Figure 40. Install Menu Structure

29.1.3. Network Integration

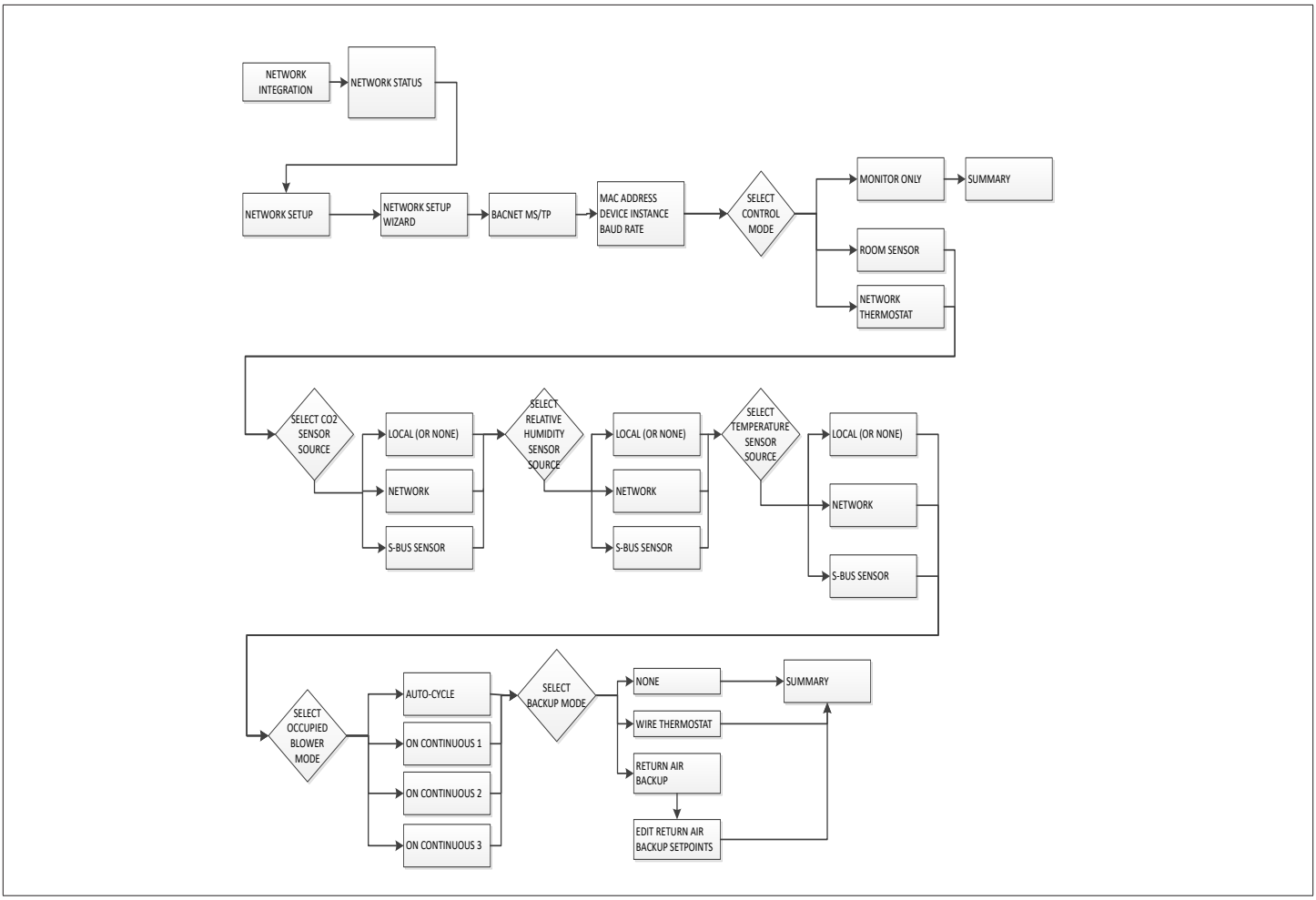

Figure 41. BACNet MS/TP Menu Structure

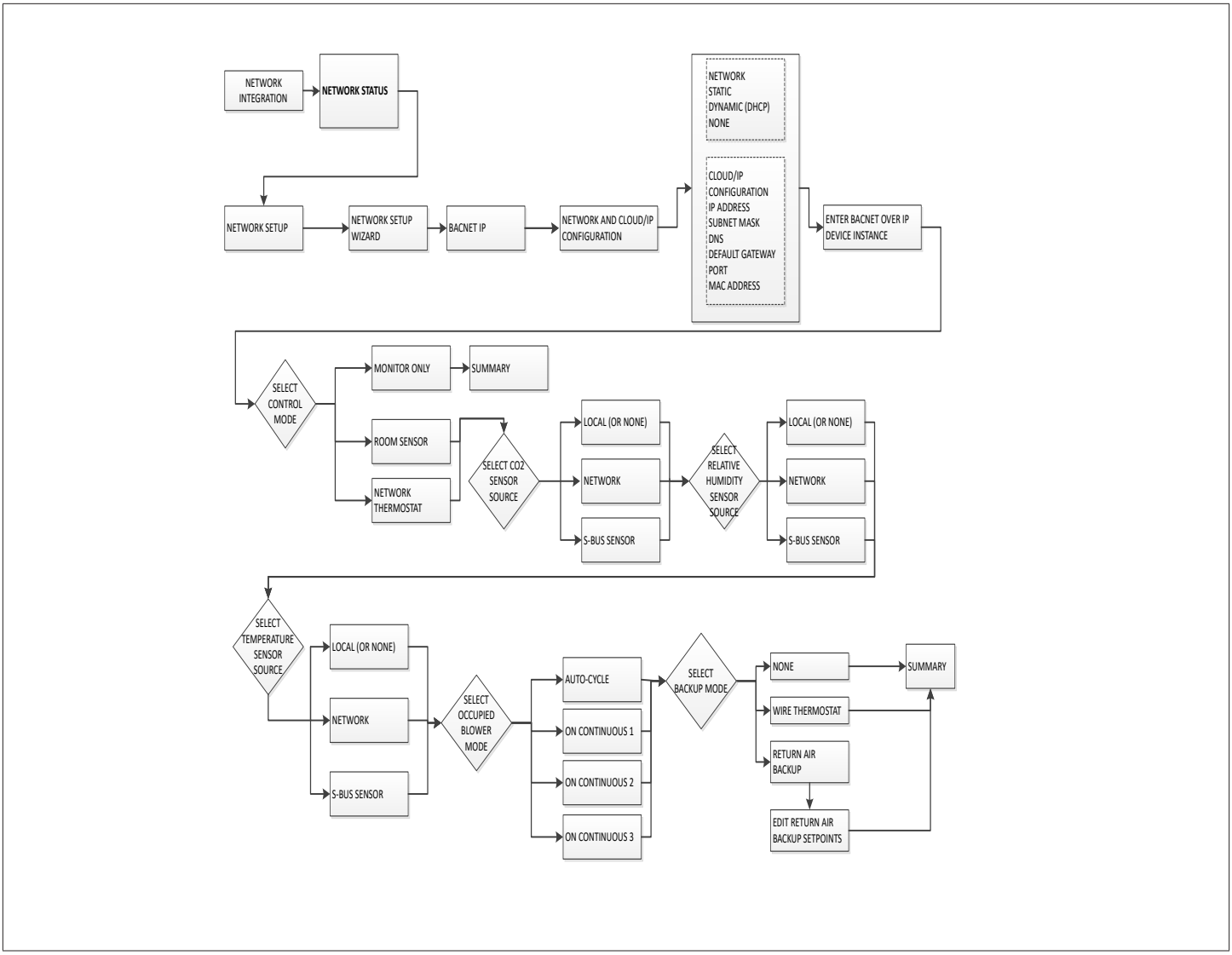

Figure 42. BACNet IP Menu Structure

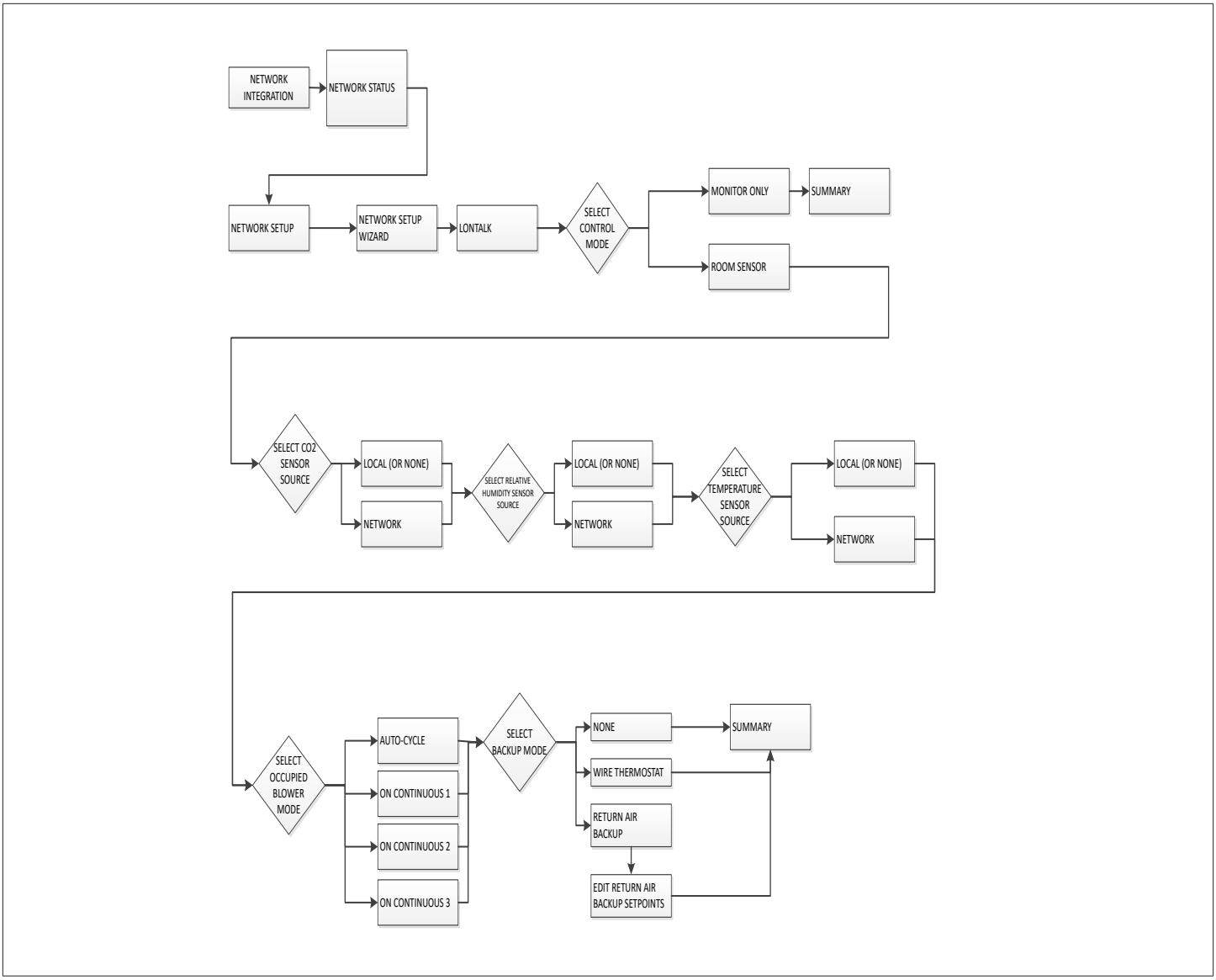

Figure 43. LonTalk Menu Structure

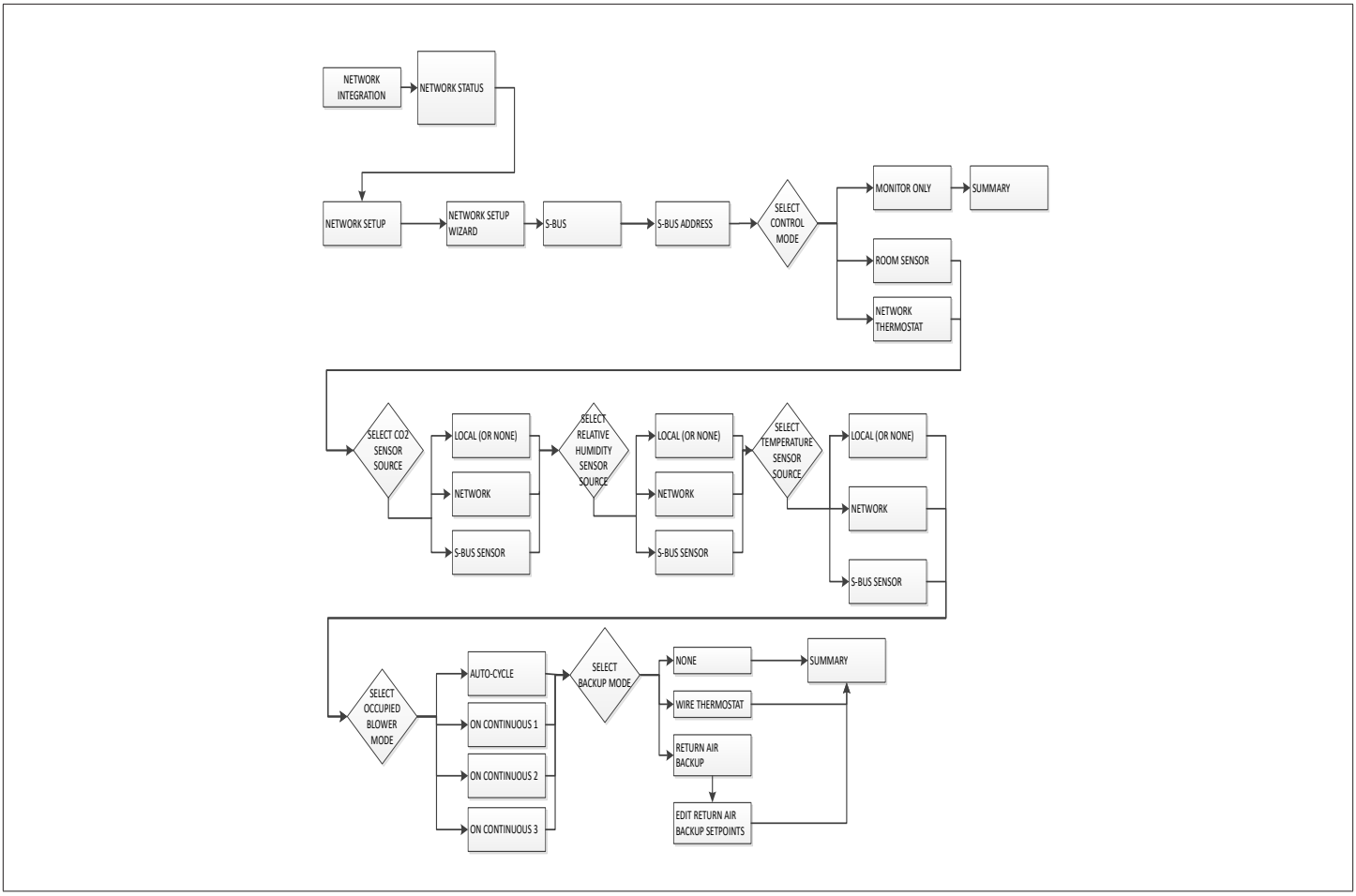

Figure 44. S-Bus Menu Structure

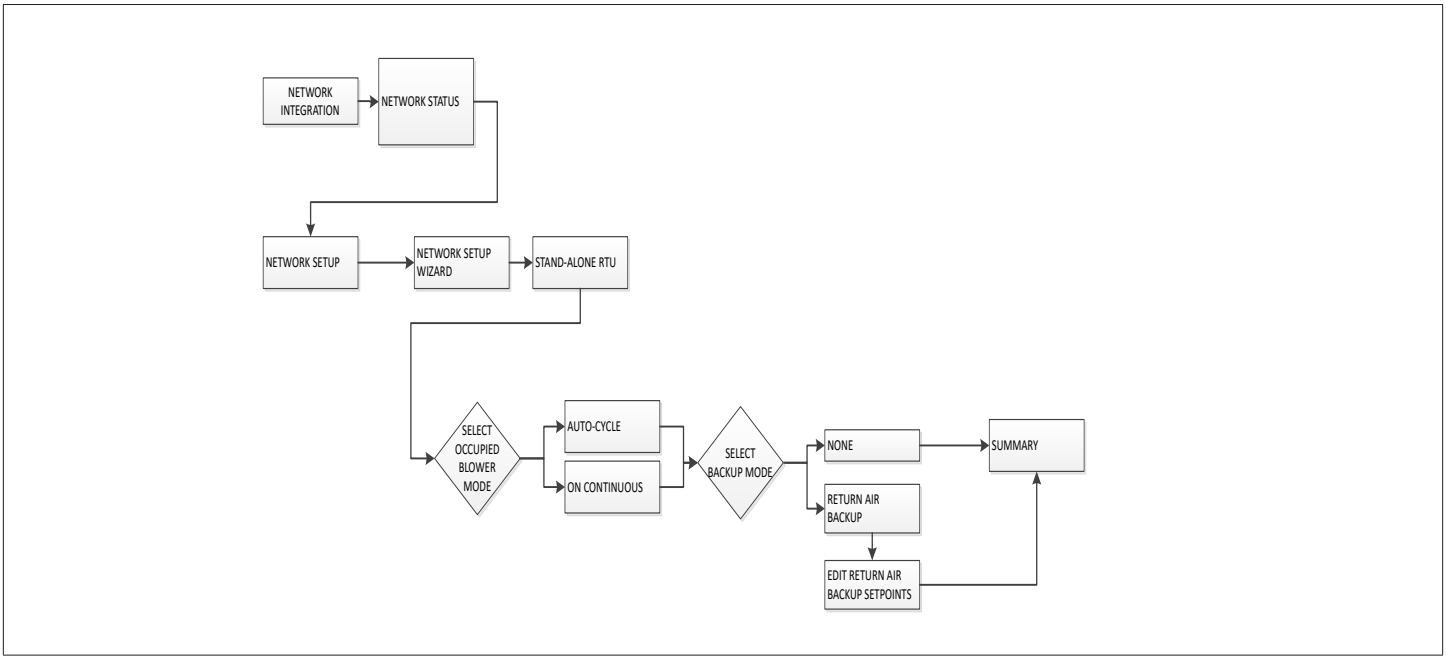

Figure 45. Stand-Alone RTU Menu Structure

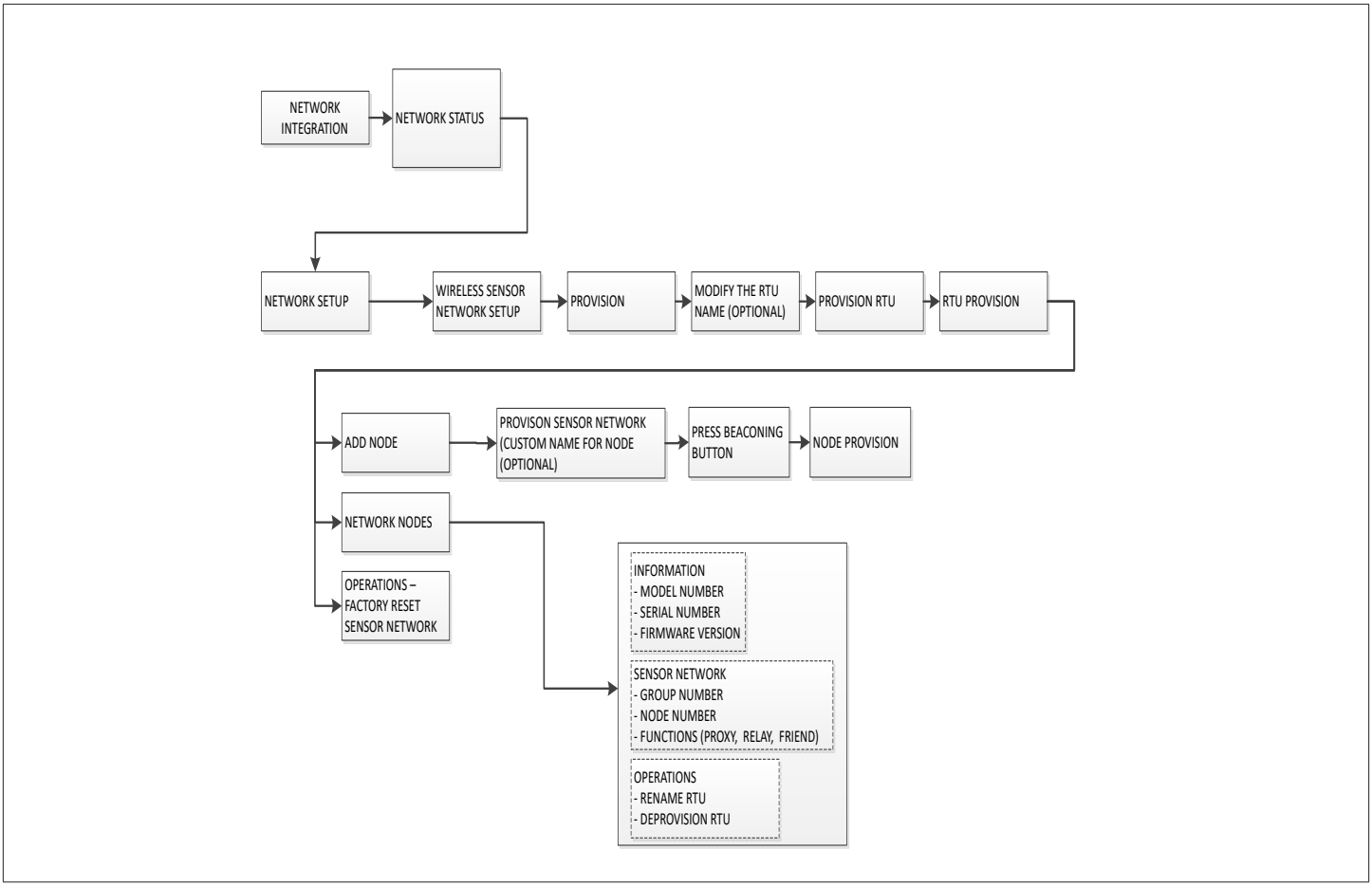

Figure 46. Wireless Sensor Network Setup Menu Structure

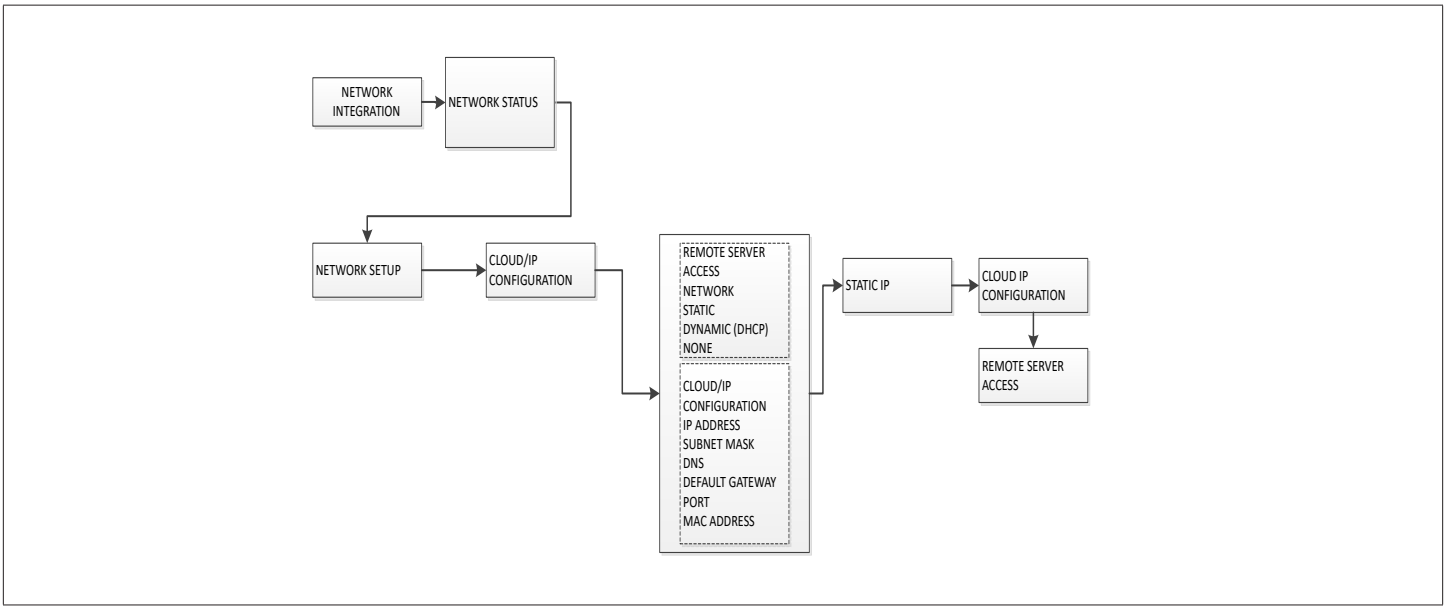

Figure 47. Cloud/IP Configuration Menu Structure

29.1.4. Test and Balance

- Blower: Includes Blower Calibration, MSAV Blower and VAV Calibration,
- Damper: Includes Economizer Options, Free Cooling, Damper Calibration (closed and open),

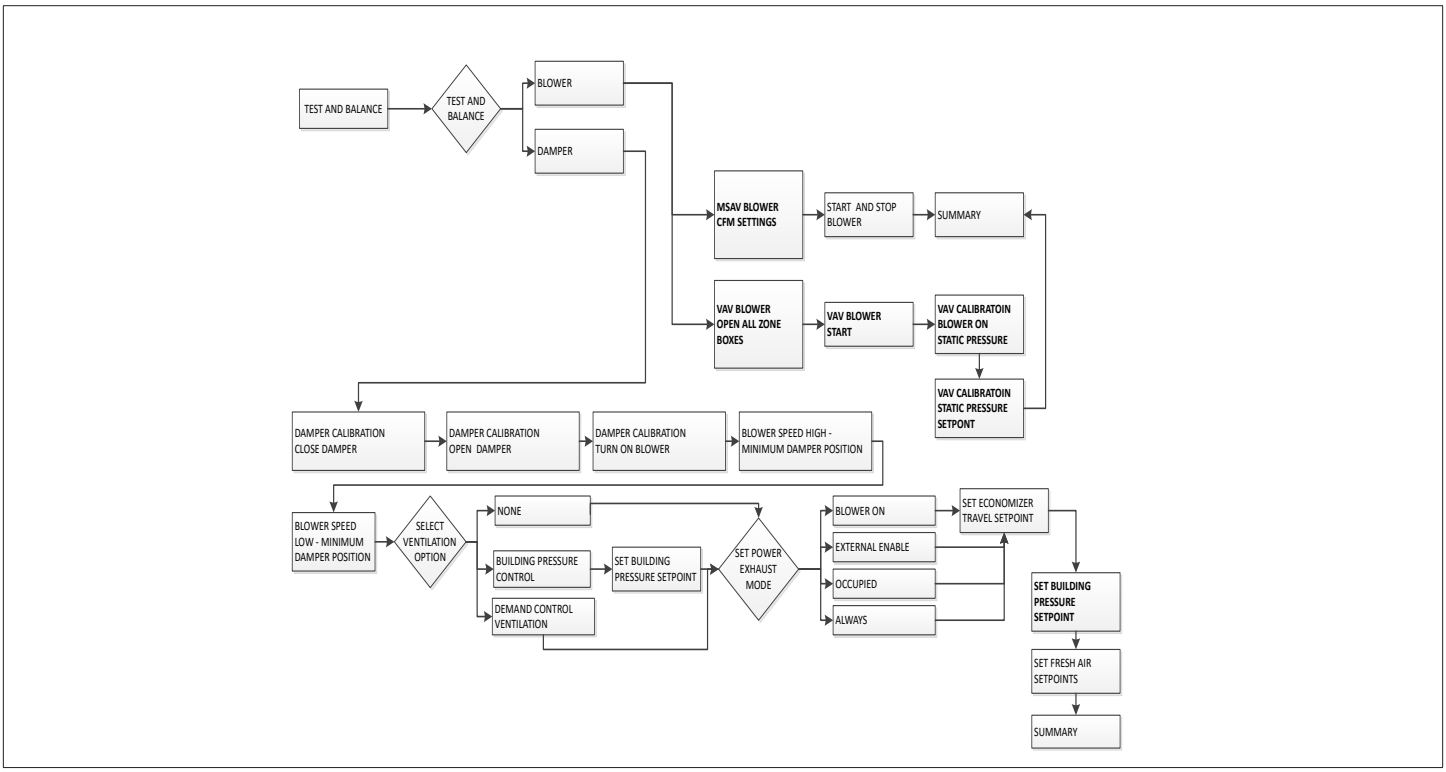

Figure 48. Motorized Outdoor Air Damper Only Menu Structure

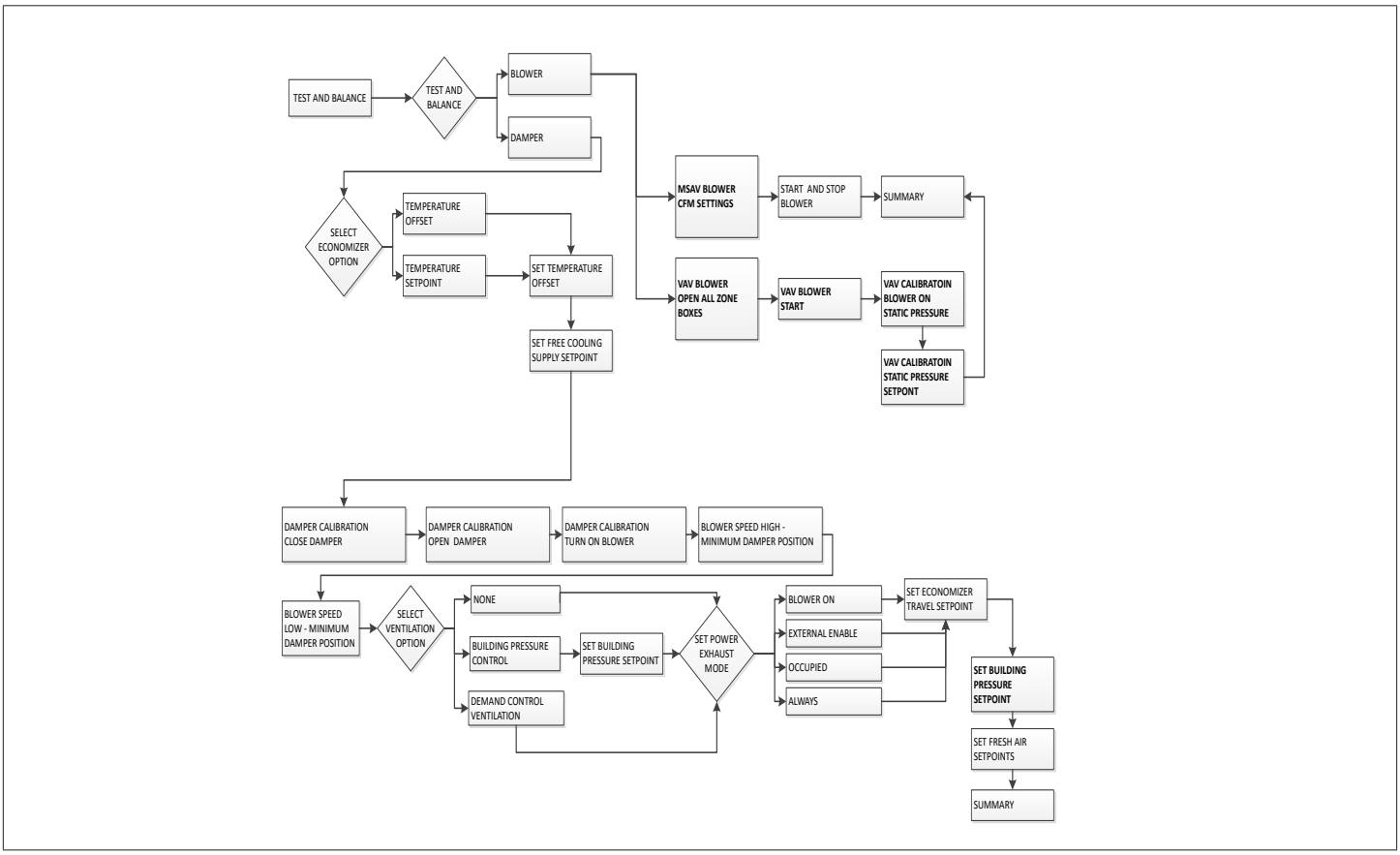

Figure 49. Economizer - Temperature Menu Structure

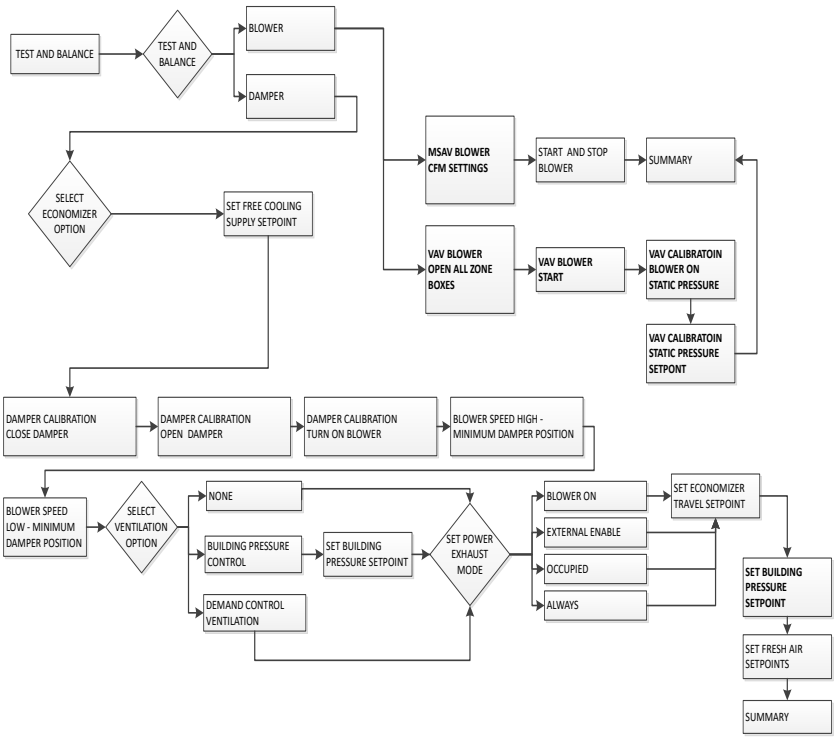

Figure 50. Economizer - Global Menu Structure

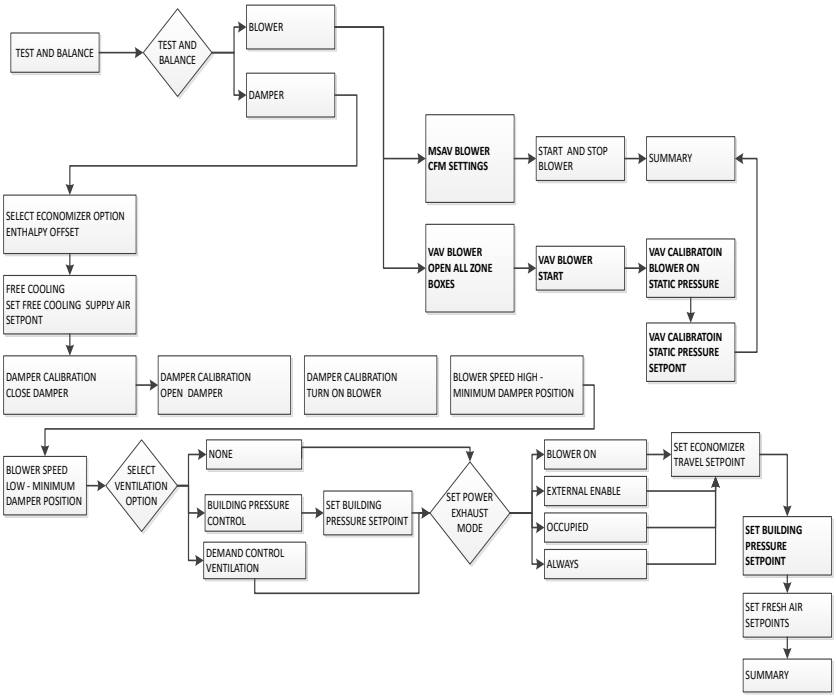

Figure 51. Economizer - Single or Dual Enthalpy Menu Structure

29.2. Data

29.2.1. Alarm History

The unitary controller will produce active and past alarm codes. As such, the mobile application will show all active alarm codes, and a limited history of formerly-active alarm codes, based upon the storage capacity of the unitary controller. The CORE Service application will:

- Display alarm information received from the unitary controller.
- Display action alerts. Alarms will be displayed in chronological order from most recent to last recent.
- Display other alarm information such as time of occurrence, and troubleshooting information.
- Indicate all alarm information per the active alarm requirements.
- Indicate the number of occurrences of an alarm in the past thirty (30) days.
- See “31. Alarms” on page 89 for alarm details.

Figure 52. Alarm Menu Structure

29.2.2. Data Trending

‘Trended data within the CORE controller is stored internally for up to two weeks and available in a user friendly format at X interval for help in troubleshooting previous operation with granular historical data.’

The main purpose of this feature is for troubleshooting a unit. Having granular, time-sensitive information is critical for this purpose. This is why having at least 5 minute intervals is set.

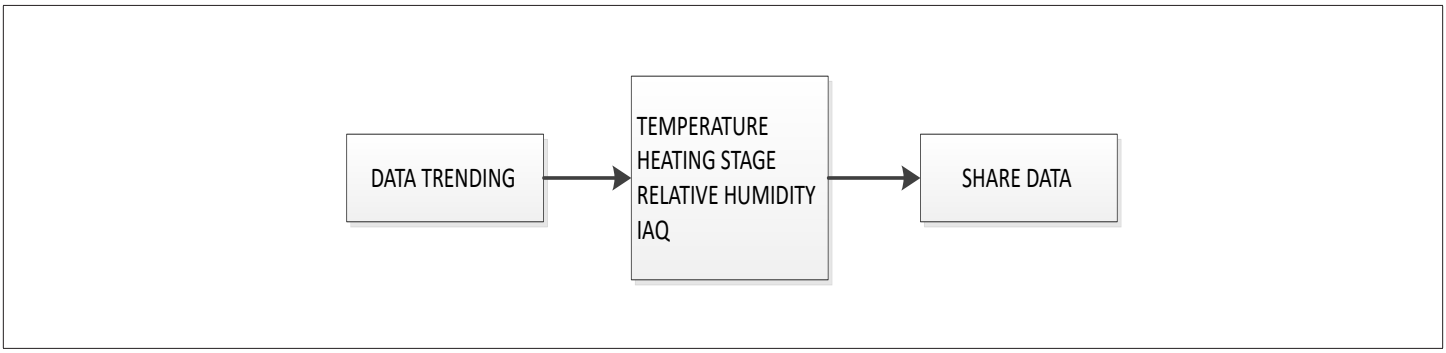

Figure 53. Data Trending Menu Structure

29.2.3. Factory

This section will display the software version, RTU description, catalog number, model number, serial number and configuration IDs 1 & 2.

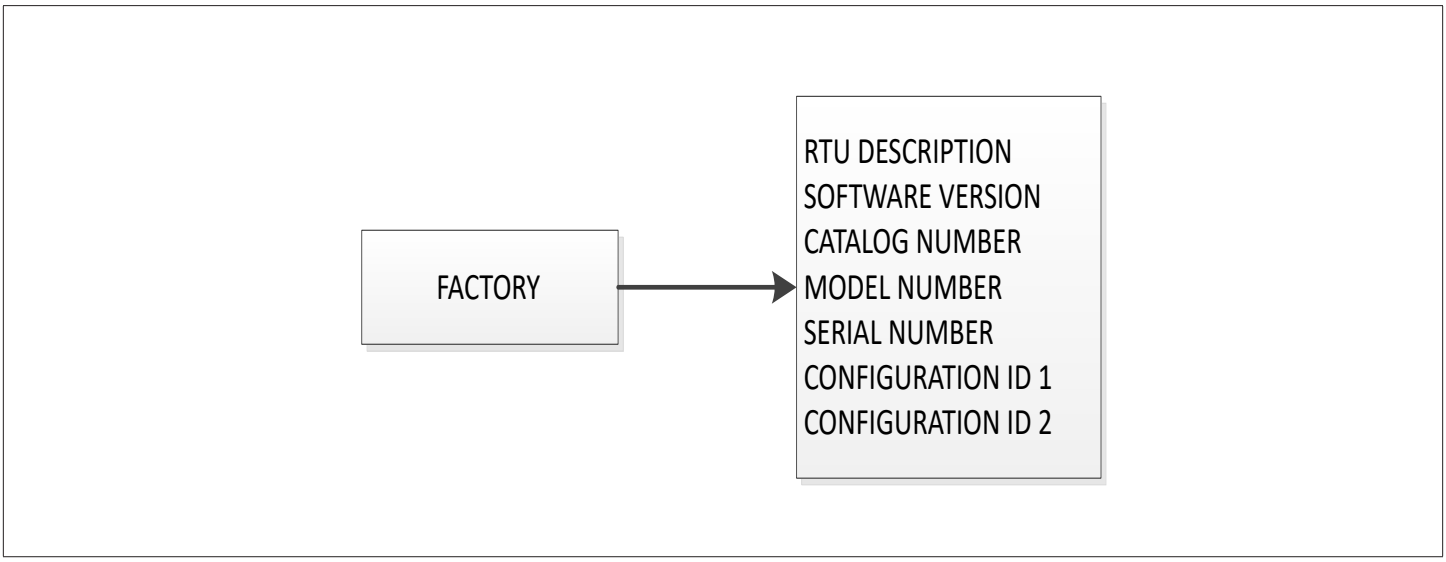

Figure 54. Factory Menu Structure

29.2.4. Runtimes

The mobile application allows the user to view the runtimes of the different system components.

- **Component Runtime** - The mobile application shall display hours of runtime for each component. The precision of the measurement shall be hours:minutes.
- **Runtime Cycles** - The mobile application shall display cycles of runtime by component.
- **Clearing of Runtime** - The mobile application shall support clearing of runtime on a component basis.

The available component runtimes are:

- Blower
- Compressor
- Condensing Fan
- Filter
- Heat State
- Power On
- Pre-Install
- Free Cooling Operation
- Power Exhaust Operation
- Dehumidification Operations

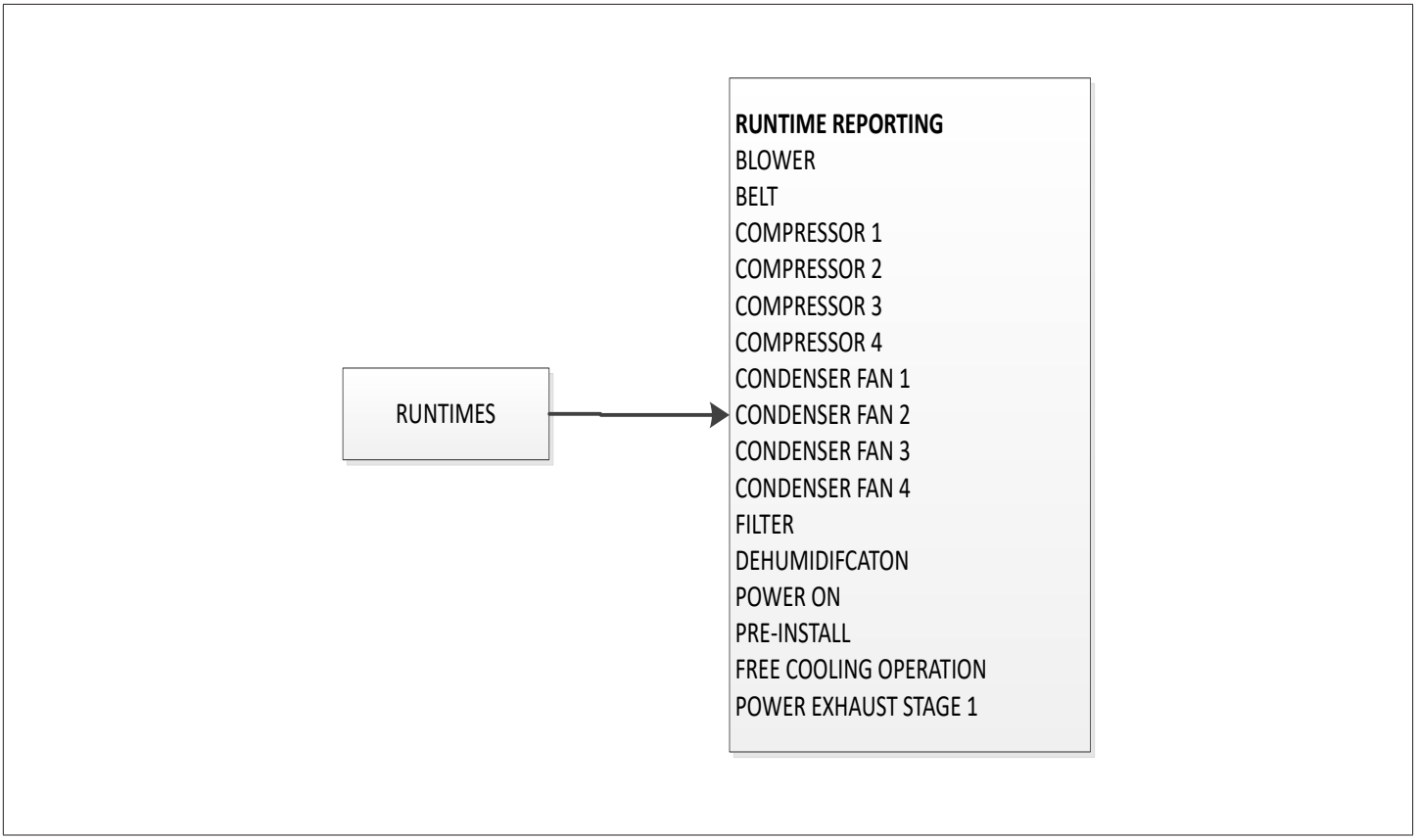

Figure 55. Runtimes Menu Structure

29.2.5. System Data / Sensor Data / Output

The follow inputs and outputs are as follows:

- Local Inputs. Examples are local thermostat inputs, sensors, digital inputs, setpoints and advanced.
- Network Inputs. Examples are BACnet MS/TP, BACnet IP, Lontalk and S-Bus
- Outputs. Examples are compressor, reheat coil, outdoor fans, heat status, damper, blower, power exhaust and other service relay output and Crankcase Heater 1 through 4.

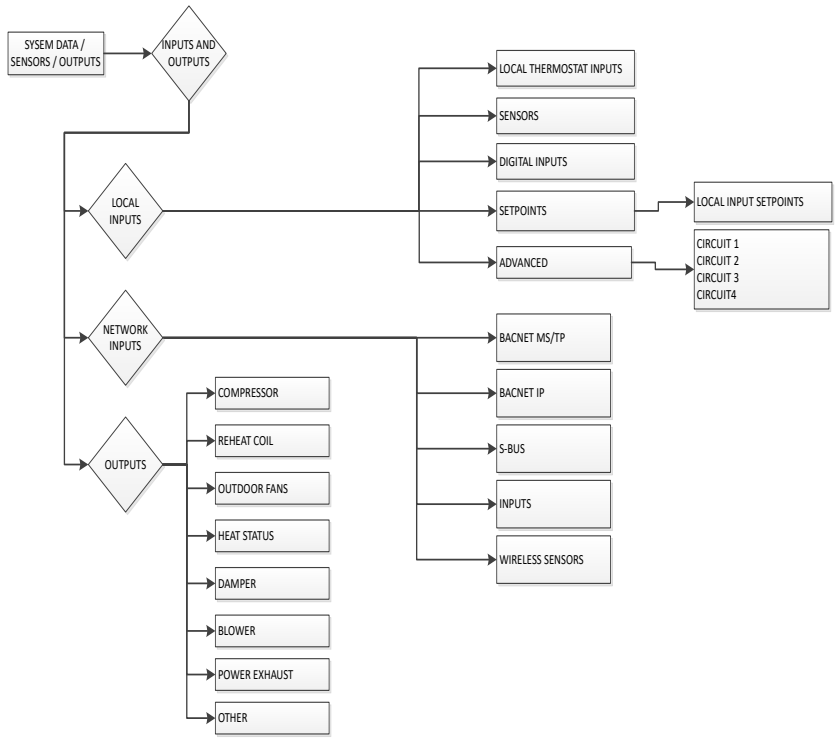

Figure 56. System Data / Sensors / Outputs Menu Structure

29.3. Service

29.3.1. Component Test

For cooling, the following tests can be run:

- Cooling Stages 1 through 4 - Tests are discharge and return air temperatures, compressor status and percent demand.
- Same tests listed above is available for all compressors present.

For heating, the following tests can be run:

- Heat Stages 1 through 4 - Tests are discharge and return air temperatures, and percent demand.

Other tests:

- Blower Speed
- Damper Position
- Power Exhaust
- Outdoor Fans 1 through 4

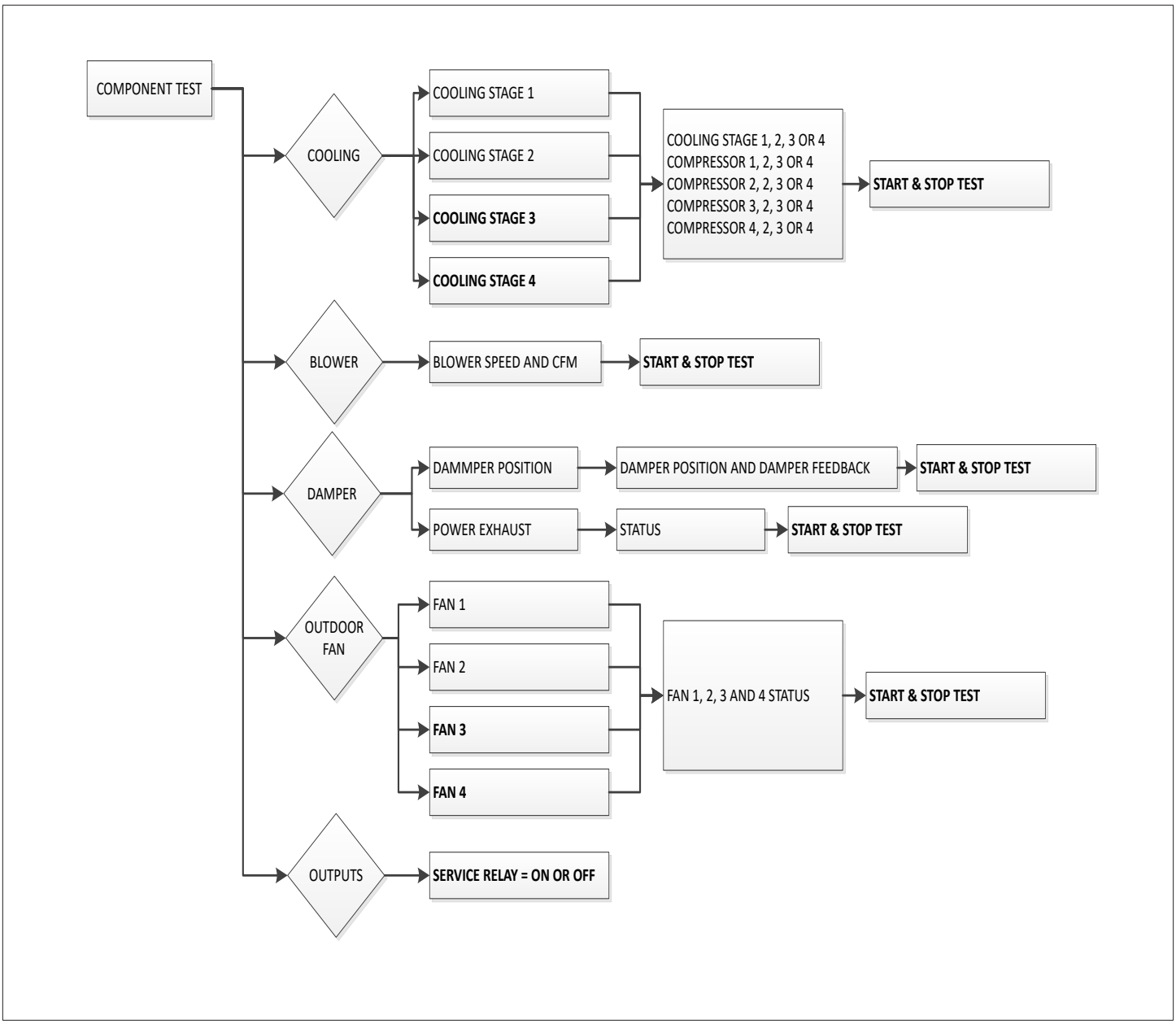

Figure 57. Component Test Menu Structure

29.3.2. Report

This section provides service reports, system logs, system profile and user profile. All logs and reports and either be downloaded to the via the W4

- Service reports - These reports are saved to the root directory of the USB storage device. In addition you can save the report to the mobile device being used and either text or email.
- System Logs - These logs are saved to the root directory of the USB storage device. In addition you can save the report to the mobile device being used or either e-mailed or use the device's share feature. There is also an option for data analytic uploads as well.
- System and User Profile - The profile is saved to the root directory of the USB storage device. In addition you can save the report to the mobile device being used or e-mailed. There is also the option in this section to load a system profile from USB as well.

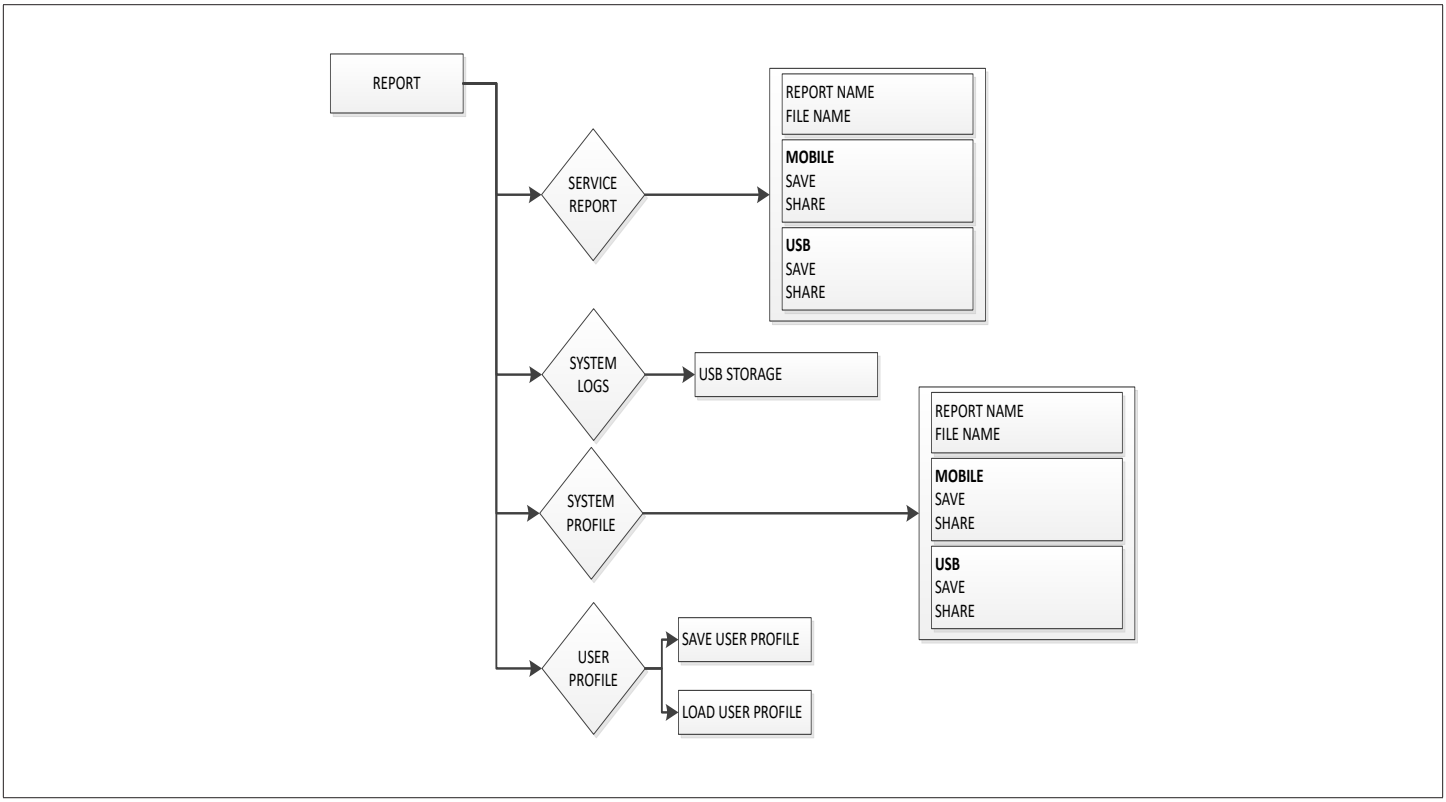

Figure 58. Report Menu Structure

29.3.3. Advanced Control

The interface will allow for the ability to remote reset the controller.

- The interface shall present a confirmation dialog to the user before proceeding with the reset command
- The interface shall indicate to the user that re-pairing will be necessary following the reboot (assuming this is necessary)

The component test functionality includes a support a "ClearDelays" functionality.

The clear delays functionality will clear timers in the CORE Control System.

The interface supports a "clear lockouts".

Features are:

- Remote Reset
- Clear Delays
- Controller Lockout - Locked or unlocked.

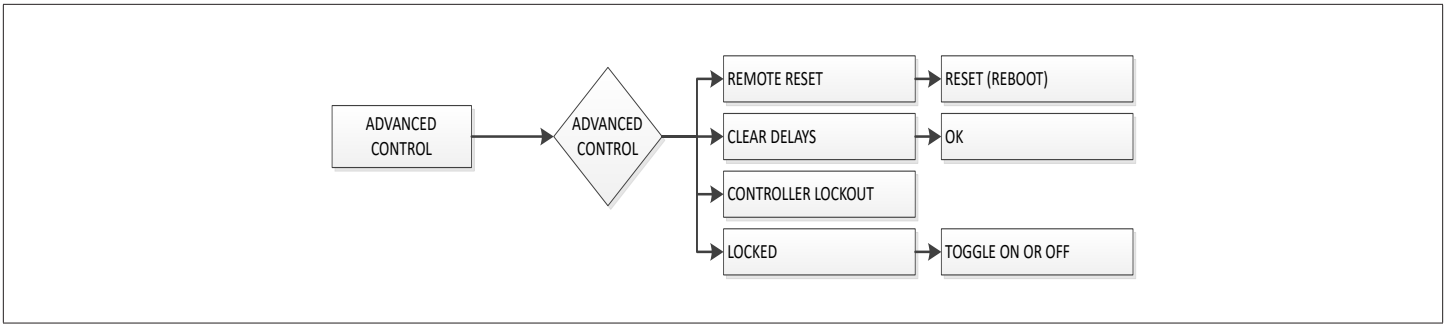

Figure 59. Advanced Control Menu Structure

29.3.4. Firmware Update

- The mobile application will update the firmware of the unitary controller.
- The mobile application will push any supported firmware image version to the unitary controller.
- Options are Automatic Cloud Update or upgrade from USB.

29.3.4.1. Updating Firmware

The mobile application shall pull the latest device supported firmware version from the cloud. The screen will list current firmware version, cloud firmware update set to on or off and upgrade from USB.

a. **Search for Updates**: The user has the ability to “search for updates” for new RTU firmware. If no updates are found, it will indicate so.

b. **File List Available for Download**: The user will be informed of the files found after query, and be allowed to start the firmware download.

c. **Downloading Image Status**: The user will be informed that the app is downloading the firmware from the cloud.

d. **W4 USB Drive as Source of Controller Firmware Image**: The mobile application will load a unitary controller firmware image from a W4 USB drive.

e. **Version Selectable**: The mobile application will allow the user to choose which version of the firmware in the USB drive shall be used.

f. **Confirmation Dialog**: The mobile application will present a confirmation dialog to the user before updating the CORE Unit Controller.

g. **Upgrade Time**: The mobile application should be able to upgrade the unitary controller firmware is approximately 60 minutes using USB. Cloud updates could be longer than 60 minutes.

h. **Upgrade with HVAC Service**: The mobile application will upgrade the unitary controller firmware without loss of HVAC service (excluding system reboot following upgrade).

i. **Installing Firmware Upgrade Status**: The mobile application shall update the firmware upgrade status every 5% of progress.

29.3.4.2. Automatic Update

a. The user has the option to set automatic cloud updates to “On” for the RTU.

b. **Firmware Install Completion Status**: The user will be informed of the firmware update completion status from the RTU.

c. **Options**:
   - Upgrade completed successfully
   - FW hash value wrong
   - Programming of flash on equipment failed
   - Power cycle or other reset occurred during upgrade
   - M4 comm failure during upgrade
   - M4 comm failure on restart following upgrade
   - M4 FW version did not change following upgrade
   - M4 FW update aborted due to connection of technician device to bus

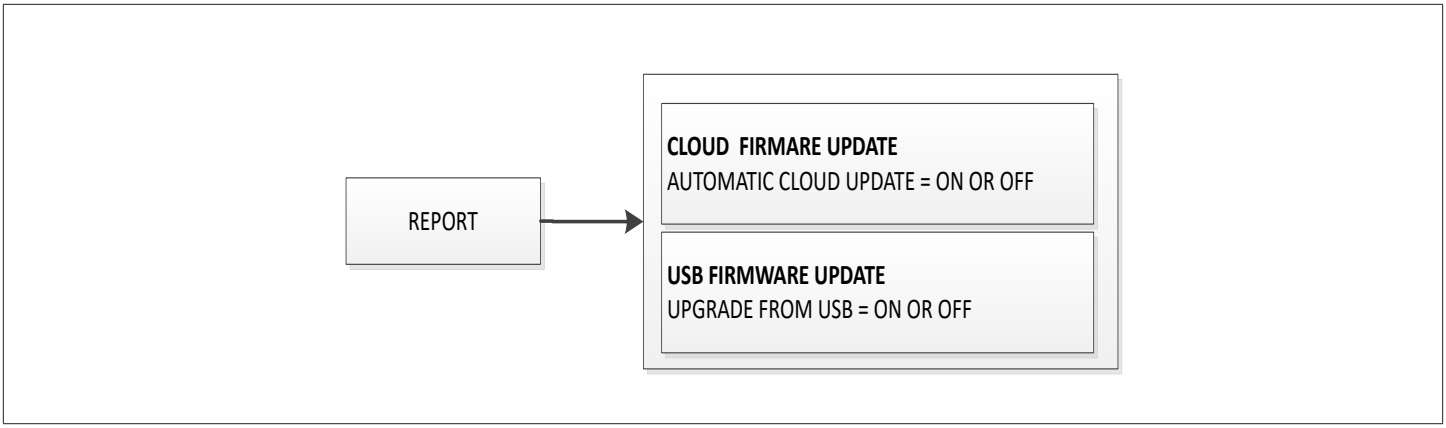

Figure 60. Firmware Update Menu Structure

29.4. Settings

29.4.1. RTU Options

Settings available are:

- Blower - Speed and VFD Bypass options
- Damper - Economizer Temperature and Economizer type with settings for Temperature offset and setpoint
- Dehumidifier
- Power Exhaust
- Edit Parameters - Categories are cooling, heating, air flow, VAV, economizer, control options and miscellaneous.

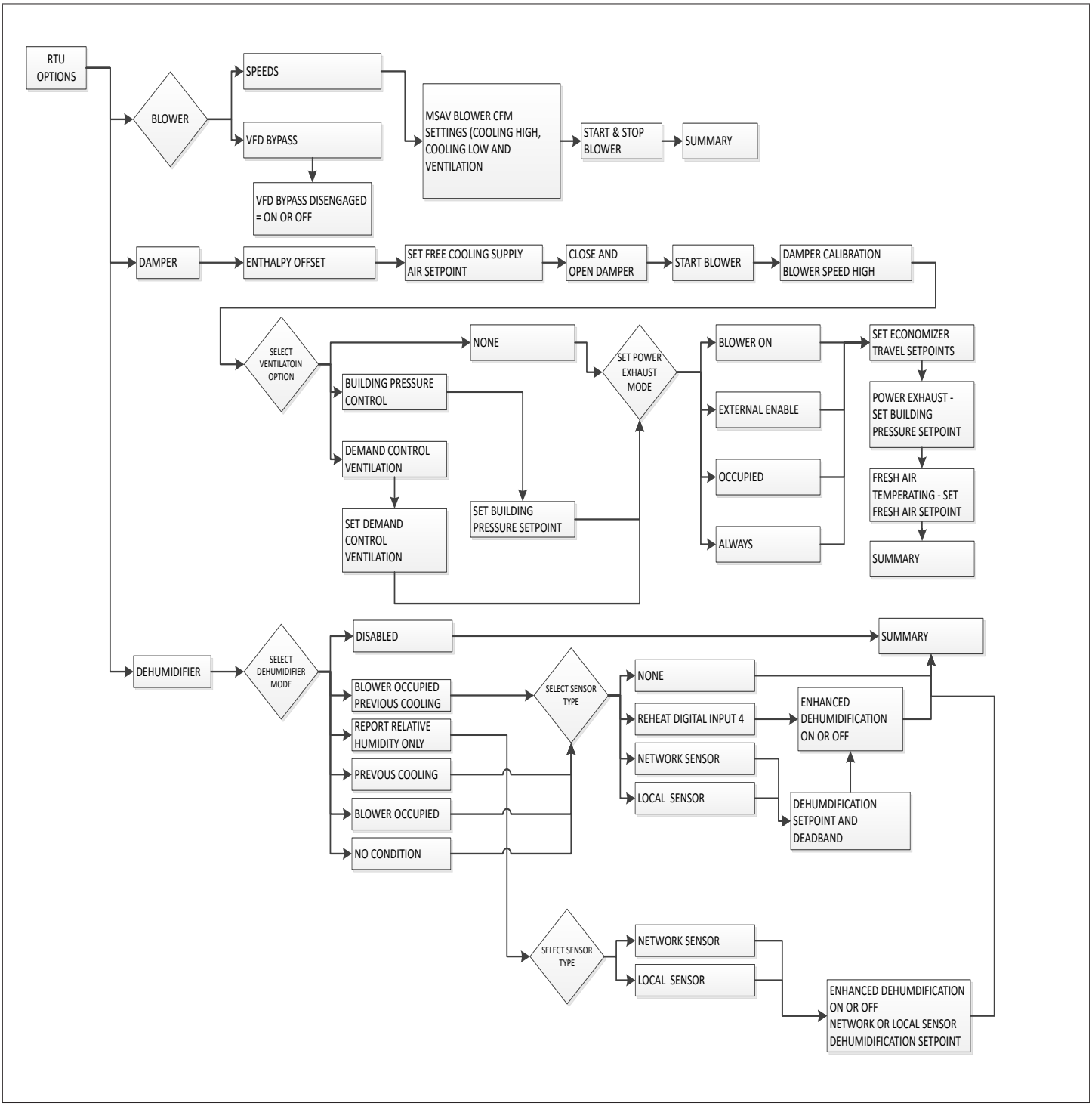

Figure 61. RTU Options - Blower, Damper and Dehumidifier

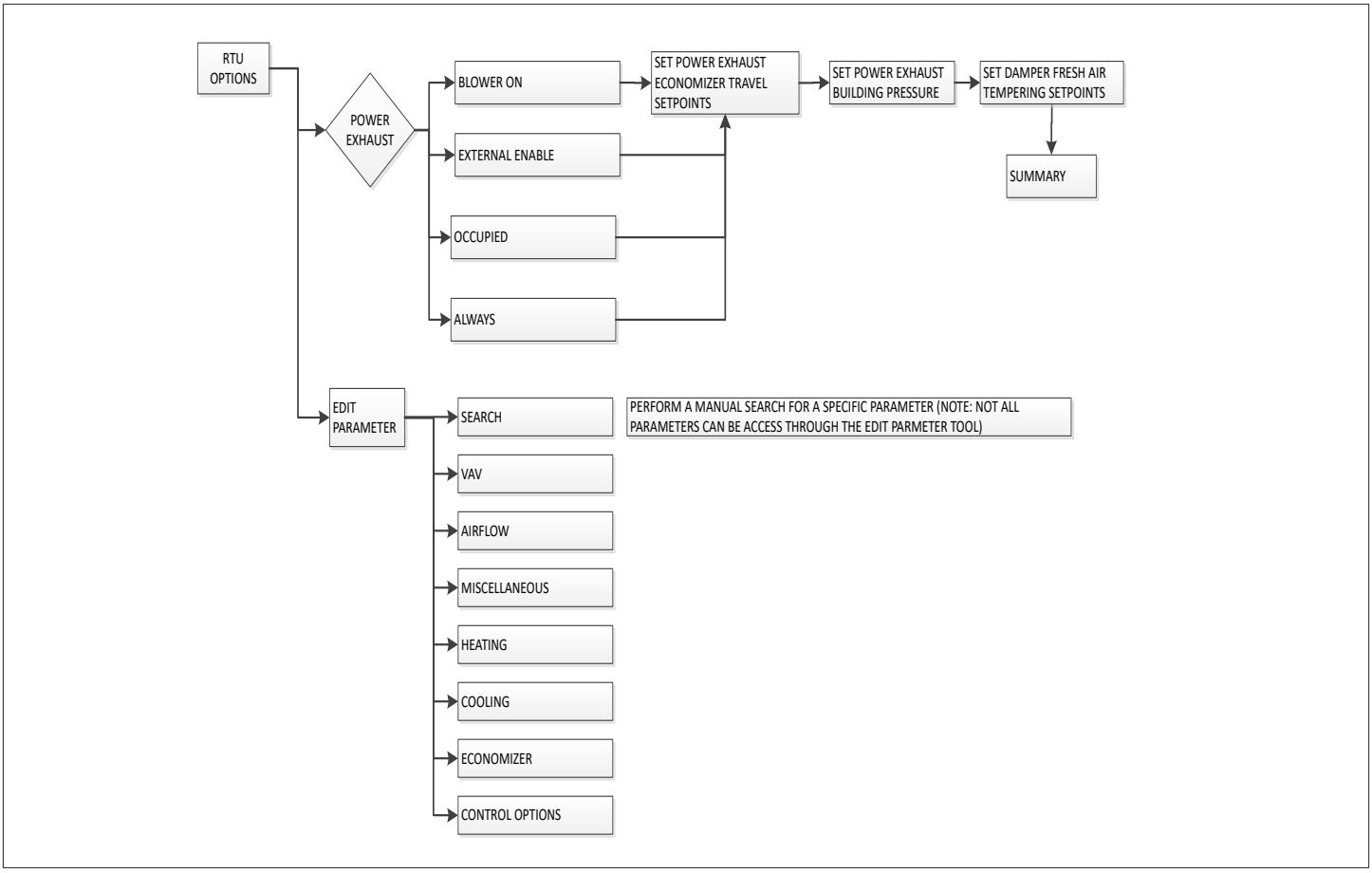

Figure 62. Settings - Power Exhaust and Edit Parameter

29.4.2. Install

The mobile application provides a menu to run “New Unit Setup”.

- New Unit setup if chosen shall direct the user towards the install menu.
- The mobile application shall provide a menu to run “Install New M4” (CORE Unit Controller).
- Install new CORE Unit Controller will first confirm with the user if it is okay to “Clear all Configuration”.
- If the user confirms that it is okay to “Clear All Configuration”, the app shall ask the user if they are sure.
- If the user confirms, the menu directs the user towards the Setup >RTU Menu > INSTALL.
- If the user cancels at any point, they shall be taken back to the Setup >RTU Menu > INSTALL.

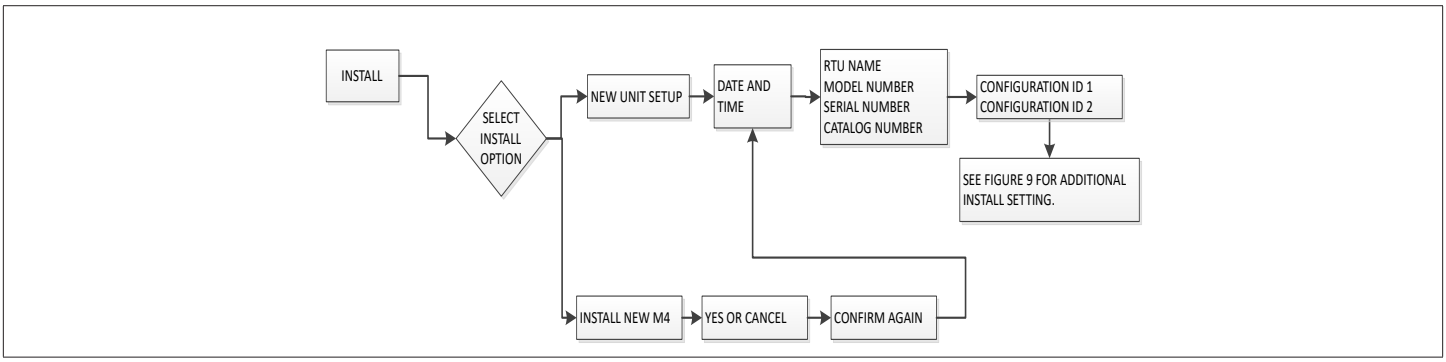

Figure 63. Settings - Install

30. Abbreviations

Table 57. Abbreviations

Abbreviation	Definition
A55	M4 board. Main RTU control board
AI	Analog input
AO	Analog output
BL	Blower
C3	Add on board for third and forth compressor and second-stage heat (A178).
C1	1st stage cooling
C2	2nd stage cooling
C3	3rd stage cooling
C4	4th stage cooling
CAI	Combustion air inducer
CAVB	Constant air volume with bypass damper
COM	Electrical common
CL	Cooling
CP1	Compressor 1
CP2	Compressor 2
CP3	Compressor 3
CP4	Compressor 4
CSP	Cooling setpoint
DAC	Discharge (supply) air control
DACC	Discharge (supply) air control cooling
DACH	Discharge (supply) air control heating
DAP	Discharge (supply) air pressure
DAT	Discharge (supply) air temperature
DB	Deadband
DCV	Demand controlled ventilation
DDC	Direct digital control
DI	Digital input
Diff	Differential
DO	Digital output
FAC	Fresh air cooling control
FAH	Fresh air heating control
FAT	Fresh air tempering control. See FAC & FAH
FC	Free cooling
G	Thermostat demand, blower
GLO	Global mode or input (economizer)
H1	1st stage heating
H2	2nd stage heating
H3	3rd stage heating
H4	4th stage heating
HP	High pressure
HSP	Heating setpoint
HT	Heating
IAQ	Indoor air quality. Often synonymous with CO2 level in ppm
IDE	Indoor enthalpy. Depends on temperature and humidity
“w.c.	Inches of water column

Table 57. Abbreviations

Abbreviation	Definition
LED	Light emitting diode. An indicator light, found either as individual elements or grouped together as segments to form characters
LP	Low pressure
LT	Limit
M4	M4 Unit Controller - main controller board (A55)
MGV	Modulating gas valve
MSAV	Multi Stage Air Volume
OAC	Outdoor air control
OAS	Outdoor air suitable for free cooling
OAT	Outdoor air temperature
OCP	Thermostat demand, occupied mode
ODE	Outdoor enthalpy. Depends on temperature and humidity
PID	Proportional, integral and derivative based control loop
PPM	Parts per million (mostly used for C_O2 measurements)
RAP	Return air pressure
RAT	Return air temperature
RH	Relative humidity
RS	Reset
RTU	Roof top unit
RT6	Discharge air temperature sensor
RT16	Return air temperature sensor
RT17	Outdoor air temperature sensor
SMK	Smoke detection mode (alarm)
SP	Setpoint
Stg	Stage
TB	Terminal block
UnOCP	Unoccupied
W1	Thermostat demand, heat stage 1
W2	Thermostat demand, heat stage 2
W3	Thermostat demand, heat stage 3
W4	Thermostat demand, heat stage 4
VAC	Alternating current voltage
VAV	Variable air volume. Accomplished with a variable frequency drive (VFD)
VDC	Direct current voltage
VFD	Variable frequency drive. An AC inverter used to vary motor speed
VT	Ventilation
Y1	Thermostat demand, cooling stage one
Y2	Thermostat demand, cooling stage two
Y3	Thermostat demand, cooling stage three
Y4	Thermostat demand, cooling stage four
ZAT	Zone air temperature

31. Alarms

31.1. Phase - Voltage Detection

The CORE Unit Controller has the ability to detect that the rooftop unit power source has the correct frequency, phasing and voltage levels. When this feature is enabled, the detection of frequency and phasing is determined at power-on and the voltage level is continuously monitored. If any of these is out of range, then an alarm is logged and the rooftop unit operation is locked out.

a. Alarms Detected at Power-On Start up:

- 121 - LINE FREQ DOES NOT MATCH UNIT CONFIG
- 126 - LINE PHASING DOES NOT MATCH UNIT CONFIG

b. Alarms - Continuously Monitoring

- 122 - 24VAC PRIMARY VOLTAGE LOW
- 123 - 24VAC PRIMARY VOLTAGE HIGH
- 134 - 24VAC SECONDARY VOLTAGE LOW
- 125 - 24VAC SECONDARY VOLTAGE HIGH

Alarms 122 through 125 are auto-resetting. The rooftop operation will be restored five (5) minutes after the proper voltage levels are restored. Alarms 121 and 126 requires removing the power and correcting the issue before restoring the rooftop operation.

The frequency (60 or 50 Hz) and the phasing (single or three-phase) of the power source is determined by the model number stored in the CORE Unit Controller. This model number and enabling/disabling the Phase-Voltage Detection feature can be modified through the CORE Unit Controller user interface. See the Installation and Setup Guide for instructions on how to configure the CONFIGURATION ID 2, Position 5. Options are:

- N = NOT INSTALLED
- 1 = ENABLED INTERNAL (LENNOX)
- 2 = EXTERNAL (A42) PHASE DETECTION ON DI-2
- 3 = EXTERNAL (A42) PHASE DETECTION ON DI-3

When an event occurs, the CORE Unit Controller will display a code which corresponds to control function. Error codes are stored and can be recalled later.

NOTE: *Any references in the user interface referencing Advanced Airflow actually indicates SmartAirflow®.*

31.2. Service Relays

Selected alarms (marked with * in the following table result in the closure of the service relay contacts (DO1). The contacts remain closed until the CORE Unit Controller resets, or alarm condition is cleared and alarm status is read via explicit S-BUS command. Other modes of operation may be selected and are described in the CORE Unit Controller Application Guide (Advanced Features).

NOTE: *Any references in the user interface referencing Advance Airflow actually indicates SmartAirflow®.*

31.3. CORE Unit Controller Alarm and Event Codes

Table 58. CORE Control System Alarm and Event Codes

SELECTED ALARMS (MARKED WITH * IN TABLE RESULT IN THE CLOSURE OF THE SERVICE RELAY CONTACTS (DO1).		
ALARM CODE	**DISPLAY MESSAGE**	**EVENT ACTION**
1	ERRATIC POWER (single phase units)	Power loss for two cycles. This may indicate that the unit power is dirty or is of low quality. Check power connections. The CORE Unit Controller will set an alarm “Erratic Power” whenever service is turned off due to detection of power loss. User will be able to clear “Erratic Power” alarm via user interface. The CORE Unit Controller will clear “Power Erratic” after the Compressor Min OFF Delay has expired. If compressor demand is still present the CORE Unit Controller will restart compressor(s) after the Compressor Min OFF Delay has expired.
2	PARAMETER ACCESS ERROR	Parameter access error. This may indicate a problem with the Parameter memory chip and parameters may not be changeable.
3	RESERVED	
4*	SMOKE	A173 input is sensed as closed. Will automatically clears once input is detected open. For smoke mode, check for source of smoke. While Smoke Alarm is active, the CORE Unit Controller will not service any cooling, heating or ventilation demands.
5*	BLOWER	Unit off. Air flow switch is normally closed. Monitoring starts 16 seconds after blower is started. if air flow switch is detected open after 16 second delay period, all compressors are de-energized, gas valves closed, electric heat turned off, economizer damper closed, and blower is stopped. Alarm will automatically clear once the error timed off delay has expired and system will resume. Check blower operation.
6*	FILTER	Dirty filter switch is detected as closed and will automatically clear once switch is detected open. Replace filter or check filter switch S27.
7	ID	
8*	STRIKE 3 ON BLOWER	Lockout is active with multiple alarm code 5 detected. Alarm can be manually cleared through the user interface. Check blower operation. Once problem is corrected, lockout alarm can be cleared by resetting the CORE Unit Controller.

Table 58. CORE Control System Alarm and Event Codes

SELECTED ALARMS (MARKED WITH * IN TABLE RESULT IN THE CLOSURE OF THE SERVICE RELAY CONTACTS (DO1).		
ALARM CODE	**DISPLAY MESSAGE**	**EVENT ACTION**
9	RESERVED	
10	24VAC POWER LOSS TB35-1	24 VAC power loss at TB35-1 on A55 (M1) board. P111 pin 11.
11	24VAC POWER LOSS TB34-1	24 VAC power loss at TB34-1 on A55 (M1) board. P113 pin 1.
12	HIGH PRESS S4 OPEN COMP	Compressor is off. Check charge, fans and coil. ***NOTE:*** *On Ultra-High Efficiency units - if only alarm 12 is present then issue could be high temperature S5 switch. If alarm 12 is accompanied with alarm 14 then most likely it is the high pressure S4 switch.* The unit controller will clear high pressure switch alarm when corresponding high pressure switch is detected as closed. Compressor will not restart until corresponding high pressure switch is closed and Minimum Off Delay (cooling or heating) has expired.
13*	STRIKE3 HIGH PRESS S4 OPEN COMP	• Compressor is lockout. Check charge, fans and coil. Use service menu to clear lockouts. • User will be able to clear high pressure switch compressor lockout and alarm via user interface. High pressure switch compressor lockout and alarm will be cleared after the CORE Unit Controller reset. • High pressure switch compressor lockout and alarm will be cleared on termination of cooling demand. • Default is 3 occurrences and can be set between 1 and 7 occurrences.
14	HIGH PRESS S7 OPEN COMP2	Compress is off. Check charge, fans or coil. This feature is not support in Model L at this time. ***NOTE:*** *On Ultra-High efficiency units tandem alarms (14) compressor 2 high temperature S8 switch. If accompanied with alarm 15 then most likely the S4 high pressure switch is the issue.* The CORE Unit Controller will clear high pressure switch alarm when corresponding high pressure switch is detected as closed. Compressor will not be restarted until corresponding high pressure switch is closed and Minimum Off Delay (cooling or heating) has expired.
15*	STRIKE3 HIGH PRESS S7 OPEN COMP2	• Compressor lockout. Check charge, fans and coil. Use service menu to clear lockouts. • User will be able to clear high pressure switch compressor lockout and alarm via user interface. High pressure switch compressor lockout and alarm will be cleared after the CORE Unit Controller reset. • High pressure switch compressor lockout and alarm will be cleared on removal of cooling demand. • Default is 3 occurrences and can be set between 1 and 7 occurrences.
16	HIGH PRESS S28 OPEN COMP3	• Compressor is off. Check charge, fans and coil. • The CORE Unit Controller will clear high pressure switch alarm when corresponding high pressure switch is detected as closed. Compressor will not be restarted until corresponding high pressure switch is closed and Minimum Off Delay (cooling or heating) has expired.
17*	STRIKE3 HIGH PRESS S28 OPEN COMP3	• Compressor lockout. Check charge, fans and coil. Use CORE Service application RTU > SERVICE menu to clear lockouts. • User will be able to clear high pressure switch compressor lockout and alarm through the user interface. High pressure switch compressor lockout and alarm will be cleared after the CORE Unit Controller reset. • High pressure switch compressor lockout and alarm is cleared on removal of cooling demand. Default is 3 occurrences and can be set between 1 and 7 occurrences.
18	HIGH PRESS S96 OPEN COMP4	• Compressor lockout. Check charge, fans and coil. • The CORE Unit Controller will clear high pressure switch alarm when corresponding high pressure switch is detected as closed. Compressor will not be restarted until corresponding high pressure switch is closed and Minimum Off Delay (cooling or heating) has expired.
19*	STRIKE3 HIGH PRESS S96 OPEN COMP4	• Compressor lockout. Check charge, fans and coil. Use service menu to clear lockouts. • User will be able to clear high pressure switch compressor lockout and alarm via user interface. High pressure switch compressor lockout and alarm will be cleared after the CORE Unit Controller reset. • High pressure switch compressor lockout and alarm is cleared on removal of cooling demand. Default is 3 occurrences and can be set between 1 and 7 occurrences.

Table 58. CORE Control System Alarm and Event Codes

SELECTED ALARMS (MARKED WITH * IN TABLE RESULT IN THE CLOSURE OF THE SERVICE RELAY CONTACTS (DO1).		
ALARM CODE	**DISPLAY MESSAGE**	**EVENT ACTION**
NOTE: *EVENTS 12 THROUGH 19 COULD ALSO BE CAUSED BY A HIGH TEMPERATURE CONDITION ON SOME COMPRESSORS EQUIPPED WITH A HIGH TEMPERATURE SHUTDOWN.*		
20	PHASE MONITOR	Phase monitor or blower motor overload switch or inverter fault output or condensate overflow switch is indicating an issue.
21	RESERVED	
22	LOW PRESS S87 OPEN COMP1	Compressor is off. Check charge, fans and coil. Use service menu to clear lockouts.
23*	STRIKE3 LOW PRESS S87 OPEN COMP1	• Compressor is off. Check charge, fans and coil. Use service menu to clear lockouts. • Number of occurrences is set using Parameter 99 (max lo occurrences). Default is 3 occurrences.
24	LOW PRESS S88 OPEN COMP	Compressor is off. Check charge, fans and coil.
25*	STRIKE3 LOW PRESS S88 OPEN COMP2	• Compressor is off. Check charge, fans and coil. Use service menu to clear lockouts. • Number of occurrences is set using Parameter 99 (max lo occurrences). Default is 3 occurrences.
26	LOW PRESS S98 OPEN COMP	Compressor if off. Check charge, fans and coil.
27*	STRIKE3 LOW PRESS S98 OPEN COMP3	• Compressor is off. Check charge, fans and coil. Use service menu to clear lockouts. • Number of occurrences is set using Parameter 99 (max lo occurrences). Default is 3 occurrences.
28	LOW PRESS S97 OPEN COMP	Compressor if off. Check charge, fans and coil.
29*	STRIKE3 LOW PRESS S97 OPEN COMP4	• Compressor is off. Check charge, fans and coil. Use service menu to clear lockouts. • Number of occurrences is set using Parameter 99 (max lo occurrences). Default is 3 occurrences.
30*	OVERFLOW SWITCH	• Check for block drain, condensate lines and drain pan overflow switch. • Alarm set if overflow switch is detected opened and compressor will be locked out. System will automatically clear alarm once switch is detected closed. System will resume operation (compressor lockout), after the Error Timed OFF Delay has expired following the Overflow switch alarm clear.
31	STRIKE3 UNIT SHUTDOWN S149	S149 input is open, condensate overflow switch; multiple times.
32	FRZ STAT S49 OPEN COMP1	Compressor is off. Check freezestat, air flow, charge, coil, air filter and outside air temperature.
33*	STRIKE3 FRZ STAT S49 OPEN COMP1	• Compressor is locked out. Check freezestat, air flow, charge, coil, air filter and outside air temperature. • Number of occurrences is set using Parameter 81 (max freeze sat occ). Default is 3 occurrences.
34	FRZ STAT S50 OPEN COMP2	• Compressor is locked out. Check freezestat, air flow, charge, coil, air filter and outside air temperature.
35*	STRIKE3 FRZ STAT S50 OPEN COMP2	• Compressor is locked out. Check freezestat, air flow, charge, coil, air filter and outside air temperature. • Number of occurrences is set using Parameter 81 (max freeze sat occ). Default is 3 occurrences.
36	FRZ STAT S53 OPEN COMP3	• Compressor is locked out. Check freezestat, air flow, charge, coil, air filter and outside air temperature.
37*	STRIKE3 FRZ STAT S53 OPEN COMP3	• Compressor is locked out. Check freezestat, air flow, charge, coil, air filter and outside air temperature. • Number of occurrences is set using Parameter 81 (max freeze sat occ). Default is 3 occurrences.
38	FRZ STAT S95 OPEN COMP4	• Compressor is locked out. Check freezestat, air flow, charge, coil, air filter and outside air temperature.
39*	STRIKE3 FRZ STAT S95 OPEN COMP4	• Compressor is locked out. Check freezestat, air flow, charge, coil, air filter and outside air temperature. • Number of occurrences is set using Parameter 81 (max freeze sat occ). Default is 3 occurrences.
40	RETURN AIR OVER HEAT LIMIT	Heat is above set point. Check space conditions and sensors.
41	RETURN AIR UNDER COOL LIMIT	Cool is below set point. Check space conditions and sensors.

Table 58. CORE Control System Alarm and Event Codes

SELECTED ALARMS (MARKED WITH * IN TABLE RESULT IN THE CLOSURE OF THE SERVICE RELAY CONTACTS (DO1).		
ALARM CODE	**DISPLAY MESSAGE**	**EVENT ACTION**
42*	BLOWER MOTOR OVERLOAD	• System will set an alarm if S42 witch is detected as open. System will automatically clear alarm once S42 switch is detected closed. System will resume operation (servicing the demands), after the Error Timed OFF Delay has expired following S42 or S135 clear. • Check external motor overloads.
43	STRIKE3 UNIT SHUTDOWN S42 OR S135	S42/ S135 Motor Overload multiple times.
44*	GAS VALVE ON NO DEMAND GV1	Unit is off. Gas valve 1 has power, but no demand. Check gas valve and wiring.
45*	GAS VALVE ON NO DEMAND GV2	Unit is off. Gas valve 2 has power, but no demand. Check gas valve and wiring.
46	NO 24VAC POWER ON A60	No 24VAC relay power on A60 (E1) board, K9-5 input. (A60)
47	NO 24VAC POWER ON A58	No 24VAC relay power on A58 (G1) board, TB35-1 input. (A58)
48	NO 24VAC POWER ON A61	No 24VAC relay power on A61(HP1) board, TB34-1 input. (A61)
49	NO 24VAC RELAY POWER ON C3 A59	Third and fourth compressors are off. Alarm automatically clears once 24VAC is present. The CORE Unit Controller will resume operation once the ERROR TIME OFF DELAY is completed. Parameter 110 is used to set the reference delay. Factory delay default is 300 seconds.
50	PRIMARY HEAT1 LIMIT OPEN S10	Heat section 1 primary gas heat limit switch is open. Check air flow, air filter, limit switch and wiring.
51*	STRIKE3 PRIMARY HEAT1 LIMIT OPEN S10	Heat section 1 primary gas heat limit switch is open. Check air flow, air filter, limit switch and wiring. Number of occurrences is reached.
52	SECONDARY HEAT1 LIMIT OPEN S21	Heat section 1 secondary gas heat limit switch is open. Check air flow, air filter, limit switch and wiring.
53*	STRIKE3 SECONDARY HEAT1 LIMIT OPEN S21	Heat section 1 secondary gas heat limit switch is open. Check air flow, air filter, limit switch and wiring. Number of occurrences is reached.
54	HEAT1 S15 LIMIT OR ROLLOUT OPEN	Heat section 1 primary electric heat limit switch is open. Check air flow, air filter, limit switch and wiring.
55*	STRIKE3 HEAT1 S15 LIMIT OR ROLLOUT OPEN	Heat section 1 flame roll out burner 1 switch is open. Check gas roll out switch S47.
56	HEAT1 CAI SW S18	Check heat section 1 combustion air motor and proof switch.
57*	STRIKE3 HEAT1 CAI SW S18	Check heat section 1 combustion air motor and proof switch. Number of occurrences is reached.
58*	HEAT1 NO PROOF GV1	Check heat section 1 ignition control, flame proof, gas valve 1 and gas supply.
59*	NO FLAME PROOF AFTER TRIALS GV1	Check heat section 1 ignition control, flame proof, gas valve 1 and gas supply. Number of occurrences is reached.
60	PRIMARY HEAT2 LIMIT OPEN S99	Check heat section 2 primary burner limit switch to see if it is open. Check air flow, limit switch and wiring.
61*	STRIKE3 PRIMARY HEAT2 LIMIT OPEN S99	Check heat section 2 primary burner limit switch to see if it is open. Check air flow, limit switch and wiring. Number of occurrences is reached.
62	SECONDARY HEAT2 LIMIT OPEN S100	Heat section 2 secondary heat limit switch is open. Check air flow, limit switch and wiring.
63*	STRIKE3 SEC HEAT2 LIMIT OPEN S100	Heat section 2 secondary heat limit switch is open. Check air flow, limit switch and wiring. Number of occurrences is reached.
64	HEAT2 ROLL OUT OPEN	Flames have been detected outside the gas heater's fire box.
65*	STRIKE3 HEAT2 ROLL OUT OPEN	Check roll out sensor and gas supply.
66	HEAT2 CAI SW	Check heat section 2 combustion air motor and proof switch.
67*	STRIKE3 HEAT2 CAI SW S45	Check heat section 2 combustion air motor and proof switch. Number of occurrences is reached.
68*	HEAT2 NO PROOF GV2	Check heat section 2 ignition control, flame roof, gas valve 2 and gas supply.
69*	NO FLAME PROOF AFTER TRIALS GV2	Check heat section 2 ignition control, flame roof, gas valve 2 and gas supply. Number of occurrences is reached.
70 - 72 RESERVED		
73	NETWORK SENSOR	Check with integrator for refresh rate, network status lights and wiring.

Table 58. CORE Control System Alarm and Event Codes

SELECTED ALARMS (MARKED WITH * IN TABLE RESULT IN THE CLOSURE OF THE SERVICE RELAY CONTACTS (DO1).		
ALARM CODE	**DISPLAY MESSAGE**	**EVENT ACTION**
74*	ZONE SENSOR	• If measurement is out of specified range (including open/short detection) the system will ignore the Zone Temperature Sensor readings and set the alarm. • If measurement of Zone Temperature Sensor is out of specified range (including open/short detection) the system will change operating mode to the specified Backup mode (None, Local Thermistor or Return Air temp). • The system will clear the alarm, if zone temperature sensor measurement is detected in specified operating range and return the system to monitoring the A2 sensor as the primary sensor input. Check zone (room) sensor and wiring
75*	OUTDOOR TEMP SENSOR	• If measurement of the outdoor temperature sensor is out of specified range (including open / short detection, the alarm will be activated. Alarm will automatically clear once in range condition is detected. • Check sensor and wiring.
76*	HUMIDITY SENSOR	• If measurement is below specified range (<5 % RH) the system will ignore the Relative Humidity readings. If measurement is above the specified range(>100% RH) the system will limit the value to 100%. • If measurement of Relative Humidity Sensor is below specified range while the dehumidification mode using RH sensor is enabled, the system will set an alarm. The system will clear the alarm if Relative Humidity sensor measurement is detected in specified operating range OR dehumidification mode using RH sensor is disabled. • Check sensor and wiring.
77*	DISCHARGE AIR TEMP SENSOR	• If measurement of the discharge air temperature sensor is out of specified range (including open / short detection, the alarm will be activated. Alarm will automatically clear once in range condition is detected. • Check sensor and wiring.
78*	RETURN AIR TEMP SENSOR	• If measurement of the return air temperature sensor is out of specified range (including open / short detection, the alarm will be activated. Alarm will automatically clear once in range condition is detected. • Check sensor and wiring.
79*	ID ADD ON BOARD PROBLEM	Add-on board problem, reset CORE Unit Controller to clear. When the communication alarm 80 persists for more than 30 seconds even after several retries for establishing the communication this Alarm is logged. Alarm can only be cleared by CORE Unit Controller reset.
80	ID ADD ON BOARD PROBLEM	When the CORE Unit Controller is not able to communicate with any attached add-on boards (C3 and GP3) this alarm code is logged. The CORE Unit Controller will retry to establish the communication once every 5 second. Alarm is automatically cleared once communication is restored.
81	REHEAT SETUP ERROR	Check reheat settings. Alarm 81 is raised under these two conditions: 1. If the user sets up the unit to use supermarket reheat on a non-gas unit. 2. If the user sets up the unit to use Humiditrol reheat but the heater type is heat pump
82	CONTROLLER RESET	If set when CORE Unit Controller powers up. Will Indicated reason for reset if known.
83*	INCORRECT SETTINGS	• Check system configuration (model number, Configuration ID 1 and ID 2. If a model number is used that requires a daughter card, the CORE Unit Controller will attempt to detect the presences of the add-on board if not detected, this alarm will be set. • This hardware configuration alarm can be only cleared by resetting or power cycling the CORE Unit Controller.
84	ADD ON BOARD NOT RESPONDING	An add-on board did not respond or is not recognized when polled by main control during system power-up. Add-on board with problem will have flickering heartbeat or no heartbeat.
85	INCORRECT HUMIDITROL	Check Humiditrol settings. Check Configuration ID 1, position 1 and verify that the position is not set to U. Should be set to either N (not installed) or H (Humiditrol). Alarm will automatically clear once correct option is set.
86*	CONFLICTING TSTAT INPUT	Check thermostat inputs for simultaneous heat and cooling wiring. Once condition is corrected, unit controller will resume operation after error time off day has expired.
87	UNIT DIP SWITCH CHANGED	UNIT (equipment type) DIP switch has changed while unit is energized. Check UNIT DIP switch setting and reset control. Make sure the UNIT DIP switch settings agree with the unit type.
88	ECTO CHIP PROBLEM	This may indicate a problem with the ECTO chip.

Table 58. CORE Control System Alarm and Event Codes

SELECTED ALARMS (MARKED WITH * IN TABLE RESULT IN THE CLOSURE OF THE SERVICE RELAY CONTACTS (DO1).		
ALARM CODE	**DISPLAY MESSAGE**	**EVENT ACTION**
89	UNIT ADDRESS NOT VALID	No address is set on unit address DIP switch SW3. Any one switch on SW3 must be in ON position. SW3 is factory set with switch #2 in on position.
90	RAM ERROR	RAM error.
91*	OUTDOOR ENTHALPY SENSOR	• If Enthalpy Sensor failure is detected, the system will disable 'Free Cooling' operation. ***NOTE:*** *Valid Outdoor Enthalpy Sensor reading is required for both 'ODE' (Outdoor Enthalpy) and 'ODE differential' (Outdoor differential). Valid Indoor Enthalpy Sensor reading is required for 'ODE differential' (Outdoor differential).* • Check economizer Parameters 160 and 161. Also check enthalpy Parameters 162 and 163. • Check sensor and wiring.
92*	INDOOR ENTHALPY SENSOR	If Enthalpy Sensor failure is detected, the system will disable 'Free Cooling' operation. ***NOTE:*** *Valid Outdoor Enthalpy Sensor reading is required for both 'ODE' (Outdoor Enthalpy) and 'ODE differential' (Outdoor differential). Valid Indoor Enthalpy Sensor reading is required for 'ODE differential' (Outdoor differential).* Check wiring and test A62 sensor using specified method in M3 application guide, section titled economizer checkout.
93*	BACKUP MODE	• Check communication loss with network sensor or if CORE Unit Controller If NETWORK INTEGRATION is set to RTU STANDALONE MODE and backup sensor is set to RETURN AIR BACKUP. • While running in backup mode the unit controller will set this alarm. The unit controller will return from Backup mode to Primary (Main) mode on a reset or after the Primary mode (room Sensor is not in error or OR network communication is re-established and available for 300 seconds. • Backup mode alarm will be cleared on the reset OR after the unit controller has returned to primary (main) system mode.
94*	BAD ZONE SENSOR SETPOINTS	Ensure that the heating and cooling set points honor the auto-changeover deadband.
95	ECTO PARAMETER CHANGED	ECTO parameter has been changed by the CORE Service application,
96	FOUR-STAGE INTERFACE FAILURE	Four stage interface failure A138. ECTO 6.01 set to option 12 when no A138 board present can also cause this alarm.
97	FOUR-STAGE CONFIGURATION ERROR	Four stage interface A138 detected but ECTO 6.01 is not set to option 12 or equipment type is set to heat pump.
98	ECTO MEMORY CHIP WRITE ERROR	ECTO memory chip write error.
99*	OAC ERROR	Check sensor and wiring. This alarm activates when the A24 sensor input signal is continuously above 25% of sensor measuring range for more than five minutes with blower stopped. The CORE Unit Controller will disable the Outdoor Air CFM control. The alarm automatically clears when the sensor reading is below 10% sensor measuring range for one minute.
100*	AIR VOL CONTROL SETUP ERROR	Check for proper installation of GP board and settings.
101*	MGV CONTROL SETUP ERROR	Check for proper installation of GP board and settings.
102*	GP CONTROL SETUP ERROR	Check for proper installation of GP board and settings.
103*	ADV CTRL SETUP ERROR	Check CORE Unit Controller Configuration ID 1 settings.
104	RESERVED	
105	ECONOMIZER CONFIGURATION ERROR	Economizer configuration error.
106*	BUILDING PRESS SENSOR	Check sensor and wiring.
107*	DUCT SUPPLY PRESS SENSOR	Check sensor and wiring. The unit controller will set Supply Air Static Pressure Sensor (A30) error status if: • Input signal is above 4.9" wc for more than 30 seconds. OR • Input signal is below 0.1"wc 20 seconds after the blower has started with setting at or above Blower Output Static Duct Alarm Check. The CORE Unit Controller will clear the Supply Air Static Pressure Sensor (A30) error status and alarm after the expiration of Error Time OFF delay.

Table 58. CORE Control System Alarm and Event Codes

SELECTED ALARMS (MARKED WITH * IN TABLE RESULT IN THE CLOSURE OF THE SERVICE RELAY CONTACTS (DO1).		
ALARM CODE	**DISPLAY MESSAGE**	**EVENT ACTION**
108	DUCT SUPPLY HIGH PRESS SENSOR	• Check sensor and wiring. • The CORE Unit Controller will shutdown operation for Error Off time (Parameter 110) if supply air static pressure exceeds supply static shutdown setpoint for 20 seconds (default) Parameter 42. • The CORE Unit Controller will clear High Supply Static (Duct) Pressure after Error Off Time has expired and static duct pressure is below Supply Static Set Point Shutdown.
109*	STRIKE3 DUCT SUPPLY PRESS SENSOR	• Check sensor and wiring. • Unit controller shall “lockout” a unit operation after the Max Static Duct Pressure Occurrences have occurred of Supply Static Pressure Sensor Error (alarm 107) and/ or High Supply Static (Duct) Pressure (alarm 108). • User shall be able to clear supply static pressure lockout and alarm via User Interface. Supply Static Pressure lockout and alarm shall be cleared after the unit controller reset. • The number of strikes is three by default. this can be changed using Parameter 43. Optional occurrence setting is 1 to 7.
110	WAITING SENSOR DATA	Check network or comfort sensor and wiring.
111	PROFILE ERROR	Configuration profile unrecoverable. Settings may have changed.
112	INTERNAL EEPROM ERASE ERROR	Internal EEPROM erase error.
113	INTERNAL EEPROM WRITE ERROR	Internal EEPROM write error.
114	INTERNAL PLL CLOCK ERROR	Internal PLL clock error.
115	TEST MODE	UNIT TEST switch in test mode.
116	TEST MODE AT RESET	UNIT TEST switch in test mode at reset.
117	HIBERNATION MODE	To insure correct voltage phasing before startup, use refrigerant pressure gauges to check proper compressor operation and arrow label for blower rotation.
118	NO DISPLAY	Display is not connected or communication lost
119	RESERVED	
120	MCB CONFIGURATION ERROR	MCB configuration error. Cases that can cause this alarm:1- MCB not present, but ECTO 0.01 requires it. 2-MCB present, but ECTO 0.01 is not set for it
121*	ID LINE FREQ MISMATCH	Power source line frequency is determined by the entered model number. This alarm is enabled by the PhaseVoltage Detection feature. The CORE Unit Controller does not have an automatic clearing method, unit power cycle or reset will be required to re-evaluate the phase sequence again.
122*	24VAC PRIMARY VOLTAGE LOW	• Low output voltage on T1 transformer. Alarm set when 24VAC voltage low if calculated RMS voltage is below low voltage alarm threshold for more than two seconds. System will stop unit operations (cooling, heating and ventilation). Low voltage threshold is 18VAC. • The CORE Unit Controller will clear alarm 24VAC Voltage Low if calculated RMS voltage is above Low Voltage Alarm Threshold + 1 VAC for more than two seconds. After the low 24VAC alarm has been cleared, the CORE Unit Controller will ignore all service demands until the Error Time Off Delay has expired.
123*	24VAC PRIMARY VOLTAGE HIGH	• High output voltage on T1 transformer. Alarm set when 24VAC voltage high if calculated RMS voltage is below low voltage alarm threshold for more than two seconds. System will stop unit operations (cooling, heating and ventilation). Low voltage threshold is 30VAC. • The CORE Unit Controller will clear alarm 24VAC Voltage high if calculated RMS voltage is above High Voltage Alarm Threshold + 1 VAC for more than two seconds. After the HIGH 24VAC alarm has been cleared, the CORE Unit Controller will ignore all service demands until the Error Time Off Delay has expired.
124*	24VAC SECONDARY VOLTAGE LOW	• Low output voltage on T1 transformer. alarm set when 24VAC voltage low if calculated RMS voltage is below low voltage alarm threshold for more than two seconds. System will stop unit operations (cooling, heating and ventilation). Low voltage threshold is 18VAC. • The CORE Unit Controller will clear alarm 24VAC Voltage Low if calculated RMS voltage is above Low Voltage Alarm Threshold + 1 VAC for more than two seconds. After the low 24VAC alarm has been cleared, the CORE Unit Controller will ignore all service demands until the Error Time Off Delay has expired.

Table 58. CORE Control System Alarm and Event Codes

SELECTED ALARMS (MARKED WITH * IN TABLE RESULT IN THE CLOSURE OF THE SERVICE RELAY CONTACTS (DO1).		
ALARM CODE	**DISPLAY MESSAGE**	**EVENT ACTION**
125*	24VAC SECONDARY VOLTAGE HIGH	• High output voltage on T1 transformer. alarm set when 24VAC voltage high if calculated RMS voltage is below low voltage alarm threshold for more than two seconds. System will stop unit operations (cooling, heating and ventilation). Low voltage threshold is 30VAC. • The CORE Unit Controller will clear alarm 24VAC Voltage HIGH if calculated RMS voltage is above high voltage alarm Threshold + 1 VAC for more than two seconds. After the high 24VAC alarm has been cleared the CORE Unit Controller will ignore all service demands until the Error Time Off Delay has expired.
126*	LINE PHASING MISMATCH	During power up or reset of unit, Mismatch on single or 3 phase power, or reverse rotation on 3 phase detected. This alarm is enabled by the Phase Voltage Detection feature.
127	ALARM BUFFER OVERLFOW	Alarm buffer overflow.
128	24VAC SECONDARY POWER LOSS	Check transformer and wire connections.
129*	VFD SHUTDOWN	VFD fault detected. Check belt and for blower overload. Fix source of fault and reset CORE Unit Controller.
130	VFD BYPASS ENGAGED	VFD bypass mode. Mode is engaged. Blower may or may not be disengage.
131 RESERVED		
132	VFD BYPASS UNCONFIG	VFD bypass mode has not been selected. Unit operates as if bypass is not installed.
133 RESERVED		
134	LOW SUPPLY AIRFLOW	Advanced Airflow enabled RTU indicates airflow target cannot be achieved. Check cause of airflow reduction such as dirty filter, changes in duct work, etc
135*	NO SUPPLY AIRFLOW	Blower RPM is too low as indicates by blower status. This means that the blower is not working. Repair blower and reset CORE Unit Controller.
136*	OA DAMPER MECH FAULT	Outdoor air damper stuck or actuator problem.
137	LOW OUTDOOR AIRFLOW	Outdoor airflow is too low so the building is not getting the designed outdoor airflow based on IAQ.
138 RESERVED		
139	HIGH OUTDOOR AIRFLOW	Ventilation CFM is too high therefore the RTU is using excessive energy.
140	CFM TARGET TOO LOW	Verify the MSAV blower settings and set the CM targets below set CFM. The alarm value will be displayed on the CORE Unit Controller screen.
141	CFM TARGET TOO HIGH	
142 RESERVED		
143*	OA DAMPER ERROR	Outdoor air differential pressure sensor value not in valid range. Might be tubing problem or high return duct resistance.
144	FIRMWARE UPDATE COMPLETED	System updated with new firmware.
145	RESERVED	
146	SERVICE EVENT	Service event logged.
147*	DAMPER FDBK LOSS	During free cooling damper is not modulating.
148*	EP CONFIG ERROR	Economizer should be installed and blower should be ECM type.
149*	OA DIFF PRESS SENSOR ERROR	Check outdoor air damper differential pressure sensor and wiring.
150*	NOT ECONOMIZING WHEN OAS	May be due to the damper motor being unplugged or disconnected.
151*	ECONOMIZING WHEN OANS	This may be due to damper motor being blocked or stuck open and therefore not closing.
152 - 162 RESERVED		
163	LIQUID PRESS OPEN	
164	STRIKE3 LIQUID PRESS OPEN	
165	ECN UNCONFIGURED	Configuration ID 1, position 2 is set to U. Select applicable option using setup/install wizard.
166	GAS CAB PRESSURE SW CLOSED GV1	This alarm will occur when the combustion air pressure switch (S18) is detected as closed immediately after the furnace demand relay is energized and before the combustion air blower is energized. Gas valve 1.
167	GAS CAB PRESSURE SW CLOSED GV2	This alarm will occur when the combustion air pressure switch (S45) is detected as closed immediately after the furnace demand relay is energized and before the combustion air blower is energized. Gas valve 2.

Table 58. CORE Control System Alarm and Event Codes

SELECTED ALARMS (MARKED WITH * IN TABLE RESULT IN THE CLOSURE OF THE SERVICE RELAY CONTACTS (DO1).		
ALARM CODE	**DISPLAY MESSAGE**	**EVENT ACTION**
168*	COMBUSTION AIR SW NOT OPEN LOCKOUT GV1	System locked out due to S45 switch closed and a specific number occurrences detected based on Parameter 72 (max cai no prf occ) setting during a single cycle.
169*	COMBUSTION AIR SW NOT OPEN LOCKOUT GV2	
170	PWR EXH UNCONFIGURED	Configuration ID 1, position 3 is set as U (unconfigured).
171	PWR EXH CONFIG ERROR	Configuration ID 1, position 4 is set correctly. if position 3 is configured then position 4 must be also.
172	EP UNCONFIGURED	Economizer should be installed and blower should be ECM type.
173	AIR FLOW SW CONFIG ERR	Verify that Configuration ID 2, position 1 is set correctly.
174	BYPAS DAMPER CONFIG ERR	Room bypass damper operation is only compatible with cab blowers. Unit Controller will only allow zone bypass unit operation if configuration ID1 is set to installed for units with B or T type blowers. Alarm will automatically clear when configuration conflict is corrected.
175	NO INPUT SHARING	Alarm will occur if load shedding input is shared with other optional devices or inputs, for example - global, blower overload, drain pan overflow, etc.
176	SBUS OBSOLETE M2 CMD	This alarm occurs when a SBUS master device sends a M2 style command to the CORE Unit Controller. The alarm is immediately cleared and a history of the event is stored.
177	NO MODEL NUMBER	Missing model configuration data. Run setup > install and complete model number information.
178	LOW SUMP SUPERHEAT	
179	STRIKE3 LOW SUMP SUPERHEAT	
180	DEFECTIVE CRANKCASE HEATER1	
181	DEFECTIVE CRANKCASE HEATER2	
182	SUCTION PRESSURE SENSOR	
183	COMP1 SUMP TEMP SENSOR	• Alarm will occur when an open or short condition is detected. Alarm will also occur when unit controller via the temperature sensor detects an out of range. Valid range is 30°F to 150°F. Possible causes are faulty temperature sensor / circuit or improper installati • The alarming value indicates which Compressor Sump Temp sensor failed. ***NOTE:*** *Not supported in Model L.* 0 - Tandem 1 Compressor 2 Sump Temp Sensor Failure 1 - Tandem 2 Compressor 2 Sump Temp Sensor Failure ***NOTE:*** *Not supported in Model L.*
184	COMP2 SUMP TEMP SENSOR	
185	ULTRA	Generic alarm for ultra issues. The alarming value will have different values for different issues.
186*	BLOWER MOTOR FAULT	In systems with EBM blower, CORE Control System will start monitoring the motor alarm output (normally closed relay contact) ten seconds after blower command is sent. The CORE Unit Controller will stop unit operation if fault conditions (relay contact open logic input high) are detected. ***NOTE:*** *Motor alarm is wired to P2597; shared with VFD alarm and ECM blower rpm inputs. Alarm will clear when inrange temperature is detected.*
187	INVERTER MINOR	• Alarming Value = Inverter error code • Possible alarming values for Alarm 187 are: > 12 - High Comp Current > 13 - High Heat sink temperature > 14 - High PFC input current • If the alarm continues after outdoor conditions have moderated, check the fan, charge and coil. Alarm 187 will automatically clear when minimum off time expires. • Refer to trouble shooting guide in service manual for more information.
	NOTE: *The inverter will automatically slow the compressor speed due to any of the above conditions and the condition drops below the time-based dependence of the system's output on present and past inputs.*	

Table 58. CORE Control System Alarm and Event Codes

SELECTED ALARMS (MARKED WITH * IN TABLE RESULT IN THE CLOSURE OF THE SERVICE RELAY CONTACTS (DO1).		
ALARM CODE	**DISPLAY MESSAGE**	**EVENT ACTION**
188	INVERTER MAJOR	• Alarming Value = Inverter error code • Possible alarming values for unit controller alarm 188 are: > 21 - Peak DC current > 22 - Maximum current reached lockout > 23 - DC Link low voltage > 26 - Locked Rotor > 28 - DC Link high voltage > 29 - Compressor over current > 61 - Low outdoor ambient inverter lockout > 62 - High Heat Sink Temperature lockout > 75 - Low Input Voltage • No action required. Compressor stops for the duration of the minimum run time. Unit shuts down after ten occurrences in one hour and Alarm 189 is initiated. Alarm 188 will automatically clear when inverter error clears. • Refer to trouble shooting guide in service manual for more information.
189	INVERTER FATAL	• Alarming Value = Inverter error code • Possible alarming values for alarm 189 are 21, 22, 23, 26, 28, 29, 61, 62 and 75. • Alarm 189 will clear upon manual reset. • Refer to trouble shooting guide in service manual for more information.
190	INVERTER COMM	Unable to communicate with inverter. The unit controller will disable compressor operation. Replace communication cable between inverter and CORE Unit Controller. If alarm continues, replace CORE Unit Controller or inverter.
191	INVERTER VOLTAGE MISMATCH	The unit controller will disable compressor operation. Replace with correct inverter part.
192	HIGH TEMP S7 OPEN COMP1	Check temperature trip switch. Compressor is off. Also check charge, fans and coil. The unit controller will clear the temperature trip alarm when corresponding compressor top cap temperature trip switch is detected as closed. Compressor will not restart until the corresponding temperature trip switch is closed and the minimum off delay has expired.
193	STRIKE3 HIGH TEMP S7 OPEN COMP1	The unit controller will disable compressor operation (lockout). Check switch, charge, fans and coil. Default is three occurrences. Alarm will be automatically cleared after removal of cooling demand.
194	CRITICAL LOSS CONDENSER AIRFLOW	Critical Loss of Condenser Airflow
195	C1 CRITICAL LOSS OF CHARGE	Critical Loss of Charge Compressor 1. In Model L this is determined by temperature readings from sensors on the coils.
196	C2 CRITICAL LOSS OF CHARGE	Critical Loss of Charge Compressor 2. In Model L this is determined by temperature readings from sensors on the coils.
197	C3 CRITICAL LOSS OF CHARGE	Critical Loss of Charge Compressor 3. In Model L this is determined by temperature readings from sensors on the coils.
198	C4 CRITICAL LOSS OF CHARGE	Critical Loss of Charge Compressor 4. In Model L this is determined by temperature readings from sensors on the coils.
199	CRITICAL LOSS OF EVAPORATOR AIRFLOW	Critical Loss of Evaporator Airflow
200	C1 NON OPERATING COMPRESSOR	Compressor 1 Not Operating
201	C2 NON OPERATING COMPRESSOR	Compressor 2 Not Operating
202	C3 NON OPERATING COMPRESSOR	Compressor 3 Not Operating
203	C4 NON OPERATING COMPRESSOR	Compressor 4 Not Operating
204	C1 TXV FAILED CLOSED	Compressor 1 TXV Failed Closed
205	C2 TXV FAILED CLOSED	Compressor 2 TXV Failed Closed
206	C3 TXV FAILED CLOSED	Compressor 3 TXV Failed Closed
207	C4 TXV FAILED CLOSED	Compressor 4 TXV Failed Closed
208	C1 MAJOR LOSS CHARGE	Major Loss of Charge Compressor 1
209	C2 MAJOR LOSS CHARGE	Major Loss of Charge Compressor 2
210	C3 MAJOR LOSS CHARGE	Major Loss of Charge Compressor 3
211	C4 MAJOR LOSS CHARGE	Major Loss of Charge Compressor 4

Table 58. CORE Control System Alarm and Event Codes

SELECTED ALARMS (MARKED WITH * IN TABLE RESULT IN THE CLOSURE OF THE SERVICE RELAY CONTACTS (DO1).		
ALARM CODE	**DISPLAY MESSAGE**	**EVENT ACTION**
212	MAJOR LOSS CONDENSER AIRFLOW	Major Loss of Condenser Airflow
213	MAJOR LOSS EVAPORATOR AIRFLOW	Major Loss of Evaporator Airflow
214	C1 COMPRESSOR FLOODING	Compressor Flooding Compressor 1
215	C2 COMPRESSOR FLOODING	Compressor Flooding Compressor 2
216	C3 COMPRESSOR FLOODING	Compressor Flooding Compressor 3
217	C4 COMPRESSOR FLOODING	Compressor Flooding Compressor 4
218	C1 SAT LIQUID TEMP SENSOR	Saturated Liquid Temperature Sensor Circuit 1 has failed. Saturated Liquid Temperature Sensor Circuit 1 has become dislodged.
219	C2 SAT LIQUID TEMP SENSOR	Saturated Liquid Temperature Sensor Circuit 2 has failed. Saturated Liquid Temperature Sensor Circuit 2 has become dislodged.
220	C3 SAT LIQUID TEMP SENSOR	Saturated Liquid Temperature Sensor Circuit 3 has failed. Saturated Liquid Temperature Sensor Circuit 3 has become dislodged.
221	C4 SAT LIQUID TEMP SENSOR	Saturated Liquid Temperature Sensor Circuit 4 has failed. Saturated Liquid Temperature Sensor Circuit 4 has become dislodged.
222	C1 LIQUID TEMP SENSOR	Liquid Temperature Sensor Circuit 1 has failed. Liquid Temperature Sensor Circuit 1 has become dislodged.
223	C2 LIQUID TEMP SENSOR	Liquid Temperature Sensor Circuit 2 has failed. Liquid Temperature Sensor Circuit 2 has become dislodged.
224	C3 LIQUID TEMP SENSOR	Liquid Temperature Sensor Circuit 3 has failed. Liquid Temperature Sensor Circuit 3 has become dislodged.
225	C4 LIQUID TEMP SENSOR	Liquid Temperature Sensor Circuit 4 has failed. Liquid Temperature Sensor Circuit 4 has become dislodged.
226	C1 SAT SUCTION TEMP SENSOR	Saturated Suction Temperature Sensor Circuit 1 has failed. Saturated Suction Temperature Sensor Circuit 1 has become dislodged.
227	C2 SAT SUCTION TEMP SENSOR	Saturated Suction Temperature Sensor Circuit 2 has failed. Saturated Suction Temperature Sensor Circuit 2 has become dislodged.
228	C3 SAT SUCTION TEMP SENSOR	Saturated Suction Temperature Sensor Circuit 3 has failed. Saturated Suction Temperature Sensor Circuit 3 has become dislodged.
229	C4 SAT SUCTION TEMP SENSOR	Saturated Suction Temperature Sensor Circuit 4 has failed. Saturated Suction Temperature Sensor Circuit 4 has become dislodged.
230	C1 SUCTION TEMP SENSOR	Suction Temperature Sensor Circuit 1 has failed. Suction Temperature Sensor Circuit 1 has become dislodged.
231	C2 SUCTION TEMP SENSOR	Suction Temperature Sensor Circuit 2 has failed. Suction Temperature Sensor Circuit 2 has become dislodged.
232	C3 SUCTION TEMP SENSOR	Suction Temperature Sensor Circuit 3 has failed. Suction Temperature Sensor Circuit 3 has become dislodged.
233	C4 SUCTION TEMP SENSOR	Suction Temperature Sensor Circuit 4 has failed. Suction Temperature Sensor Circuit 4 has become dislodged.
234	UTEC INTERNAL FAULT GV1 ROM RAM	
235	UTEC INTERNAL FAULT GV2 ROM RAM	
236	UTEC MAX FLAME LOSS GV1	
237	UTEC MAX FLAME LOSS GV2	

Table 58. CORE Control System Alarm and Event Codes

SELECTED ALARMS (MARKED WITH * IN TABLE RESULT IN THE CLOSURE OF THE SERVICE RELAY CONTACTS (DO1).		
ALARM CODE	**DISPLAY MESSAGE**	**EVENT ACTION**
238	UTEC FALSE FLAME GV1	
239	UTEC FALSE FLAME GV2	
240	UTEC INTERNAL FAULT GV1 VALVE	
241	UTEC INTERNAL FAULT GV2 VALVE	
242	UTEC VALVE FAULT LOCKOUT GV1	
243	UTEC VALVE FAULT LOCKOUT GV2	
244 - 255	RESERVED	
500	Error Reading USB Device	Error Reading USB Device
501	USB Device not Mounted	USB Device not Mounted
502	USB Device Full	USB Device Full
503	Invalid DIN number	Invalid DIN number received from M4. Indicates DIN incompatibility

32. CORE Control System Unit Parameters

Table 59. CORE Control System Unit Parameters

Control Parameter No	Screen Name	Parameter Short Description	Control Value			Units	Description
			Min.	Default	Max.		
2	LANGUAGE	LANGUAGE		ENGLISH, SPANISH OR FRENCH		Option	Select desired language for user interface. Options are English, French and Spanish.
Power and Damper Parameters							
5	VAV CONTROL MODE	Variable Air Volume Control Mode	0	If applicable to specific unit,	511	Option	Applicable to Standard Efficiency 3- to 6-ton units only. • 16 = Runs the blower in high speed when occupied and there is not other active demand (room sensor mode only) • 32 = Runs the blower in high speed when G is active and there is no other active demand (thermostat mode only)
6	BLOWER SMOKE OUTPUT	Blower Smoke Output	20	Depends on equipment	100	%	• Applicable to High Efficiency 3- to 5-ton units. • Blower staged percentage output during smoke detection.
7	BLOWER HEAT OUTPUT	Blower Heat Output	20	Depends on equipment	100	%	• Applicable to High Efficiency 3- to 5-ton units only. • Blower staged percentage output high speed; used for high heating speed.
8	BLOWER LO CL OUTPUT	Blower Cool Output	20	Depends on equipment	100	%	• Applicable to High Efficiency 3- to 5-ton units only. • Blower staged percentage output low speed; used for low cooling or ventilation.
9	MIN DAMPER LOW BLWR	Minimum Damper Position During High Speed Blower Operation	0	0	100	%	• Minimum damper position during low speed blower operation. • Use Parameter 132 during high speed blower operation
10	FREE CL STG UP DLY	Free Cooling Blower Stage Up Delay	0	300	1800	Sec	• Applicable to Standard Efficiency 3- to 6-ton only. • Free cooling blower stage-up delay. Blower runs low speed during delay, and then shifts to high speed.
11	ENBL FIELD STAT RPT	Enabled Field Status Report		0 = OFF 1 = ON		Option	Enabled Field Status Report
12	MSAV SMK CFM	Multi-Stage Air Volume Smoke Detection Mode (Alarm)	450	Default may be altered at factory test.	14400	CFM	Multi-Stage Air Volume Smoke Detection Mode (Alarm) ***NOTE:*** *In order for the SMOKE CFM change to take affect, go the* **SETUP > TEST & BALANCE > BLOWER** *and run the wizard. Performing this task will recalculate the output to the desired CFM. No adjustments are required during this procedure.*
19	MAX CFM RPM	Maximum Cubic Feet Per Minute Revolutions Per Minute	445	Default may be altered at factory test.	1780	RPM	Maximum Cubic Feet Per Minute Revolutions Per Minute
27	MIN OUPT CL VT SMK	Minimum Output Cooling Vent Smoke Detection Mode (Alarm)	30	50	100	%	Minimum Output Cooling Vent Smoke Detection Mode (Alarm)
28	MIN OUTPUT HEAT	Minimum Output Heat	30	50	100	%	Minimum Output Heat

Table 59. CORE Control System Unit Parameters							
Control Parameter No	Screen Name	Parameter Short Description	Control Value			Units	Description
			Min.	Default	Max.		
29	MIN DAMPER BLOWER	Minimum Damper Blower	0	Default may be altered at factory test.	101	%	Setting this Parameter to 101.0% will disable this feature.
30	PWREXH STG2 MIN BLR	Power Exhaust Stage 2 Minimum Blower	0	70	100	%	Power Exhaust Stage 2 Minimum Blower
31	SUPPLY PID P CONST	Supply Proportional Base Control Loop for Variable Air Volume or Constant Air Volume with Bypass Damper	0	17	127	Counts	Variable Air Volume or Constant Air Volume with Bypass Damper supply PID Proportional constant.
32	SUPPLY PID I CONST	Supply Integral Base Control Loop for Variable Air Volume or Constant Air Volume with Bypass Damper	0	12	127	Counts	Variable Air Volume or Constant Air Volume with Bypass Damper supply PID Integral constant.
33	SUPPLY PID D CONST	Supply Derivative Base Control Loop for Variable Air Volume or Constant Air Volume with Bypass Damper	0	0	127	Counts	Variable Air Volume or Constant Air Volume with Bypass Damper supply PID derivative constant.
34	BLR STC PRESS SMK SP	Constant Air Volume with Bypass Damper Static Pressure Set Point During Smoke Alarm	0	1	5	w.c.	Constant air volume with bypass damper static pressure set point during smoke alarm.
35	BLR STC PRES VT SP	Constant Air Volume with Bypass Damper Static Pressure Set Point for Ventilation	0	1	5	w.c.	Constant air volume with bypass damper static pressure set point for ventilation.
36	BLR STC PRES HT SP	Constant Air Volume with Bypass Damper Static Pressure Set Point for Heating	0	1	5	w.c.	Constant air volume with bypass damper static pressure set point for heating
37	BLR STC PRES CL SP	Constant Air Volume with Bypass Damper Static Pressure Set Point for Cooling	0	1	5	w.c.	Constant air volume with bypass damper static pressure set point for cooling
38	MIN OUTPT CL VT SMK	Constant Air Volume with Bypass Damper Minimum Output Percentage Set Point for Cooling, Ventilation and Smoke Alarms	20	20	100	%	• Constant air volume with bypass damper minimum output for cooling, ventilation and during smoke alarms. This sets the minimum air delivered. • Bypass damper motor is set to 10 to 2 volts with 10 volts being closed. • 20% setting = 2 volts or damper completely opened.

Table 59. CORE Control System Unit Parameters							
Control Parameter No	Screen Name	Parameter Short Description	Control Value			Units	Description
			Min.	Default	Max.		
39	MIN OUTPUT HEAT	Constant Air Volume with Bypass Damper Minimum Output Percentage Set Point for Heating	20	20	100	%	• Constant air volume with bypass damper minimum output for heating. • This sets the minimum air delivered. • Bypass damper motor is set to 10 to 2 volts with 10 volts being closed. • 20% setting = 2 volts or damper completely opened.
40	BLOWER MAX OUTPUT	Constant Air Volume with Bypass Damper Maximum Output Percentage Set Point	40	100	100	%	• Constant air volume with bypass damper maximum output. • This sets the maximum air delivered. • Bypass damper motor is set to 10 to 2 volts with 10 volts being closed. • 100% setting = 10 volts or damper completely closed.
41	SUPPLY MANUAL RESET	Constant Air Volume with Bypass Damper Manual Reset Value Output Percentage Set Point	20	52	100	%	Constant air volume with bypass damper manual reset value output. This is the output when unit is off.
42	STATIC SHUTDOWN SP	Air Supply Static Shutdown Set Point	0	2	5	w.c.	Supply static shutdown set point. Unit will shutdown for Parameter 110 minutes if duct pressure exceeds this value for 20 seconds.
43	STATIC LOCKOUT CNT	Static Pressure Lockout Counter Set Point	1	3	7	Counts	• The number of occurrences before permanent lockout. Counter resets when unit controller resets. • Refer to Parameter 226 to either enable or disable this feature.
44	STATIC LO ALARM CHK	Supply Static Sensor (A30) Low Alarm Percentage Set Point	30	40	100	%	• Supply Static Pressure Sensor (A30) connected at (A133_P195_6) (TB18_6) alarm threshold. • Blower percent speed before checking sensor after a 20 second delay. • A value of 30% disables the low threshold or “open” alarm trap.
Electric Heating Parameters							
58	HT ELEC WARMUP DLAY	Electric Heat Warm-up Time Delay for Economizer	0	60	136	Minutes	Warm-up time delay. The time that the economizer is forced closed during warm-up (first occupied + heat demand)
60	HT ELEC BL OFF DLAY	Electric Heat Blower Off Delay Set Point.	0	System Dependent	300	Seconds	The time the blower stays on after the heating demand is satisfied.
61	HT ELEC MAX LT OCC	Electric Heat Maximum Primary and Secondary	1	3	15	Counts	Service output activation. Maximum Primary and Secondary Limit occurrences stored before service relay is energized. ***NOTE:*** *Heating stage is not locked out.*
62	HT ELEC STAGE DELAY	Electric Heat Time Delay Between Heat Stages	12	12	60	Seconds	Time delay between heat stages.
63	HT ELEC STG UP TMR	Electric Heat Maximum Lower Stage Run Time in Room Sensor Applications	0	912	3600	Seconds	• Stage up timer. The maximum time that lower stage runs before calling next heat stage. Used in room sensor applications. • Disabled if set to 0.

Table 59. CORE Control System Unit Parameters							
Control Parameter No	Screen Name	Parameter Short Description	Control Value			Units	Description
			Min.	Default	Max.		
64	HT ELEC STG DWN TMR	Electric Heat Time Delay for Lower Stage Termination Following Higher Stage Termination	0	0	3600	Seconds	• Time delay before a lower stage turns off following a higher stage termination. • Used in room sensor applications.
Gas Heating Parameters							
65	HT GAS WARMUP DELAY	Gas Time Delay for Economizer Being Closed During Warm-up	0	60	136	Minutes	Warm-up time delay. The time that the economizer is forced closed during warm-up (first occupied + heat demand).
66	HT GAS BLR ON DELAY	Gas Blower On Delay After Heating Demand	8	System Dependent	60	Seconds	The time before the blower turns on after a heating demand.
67	HT GAS BLR OFF DLAY	Gas Blower Off Delay After Heading Demand Termination	80	System Dependent	300	Seconds	The time the blower stays on after the heating demand is terminated.
69	HT GAS HI FIRE DLAY	Gas Minimum Low Fire Time Prior to High Fire	30	100	300	Seconds	The minimum low fire time before high fire is allowed.
70	HT GAS OFF DELAY	Heating Off Delay Timer	30	100	300	Seconds	Heating off delay.
71	MAX CAI PRF SW OCC	Maximum Combustion Air Inducer Proof Switch Occurrence Setting Prior To Service Output Energized.	1	3	5	Occurrences	Service relay activation. Maximum combustion air Inducer proof switch occurrences stored before service output is energized.
72	MAX CAI NO PRF OCC	Maximum Combustion Air Inducer Proof Switch Occurrences	1	3	15	Occurrences	After the initial maximum combustion air Inducer proof switch closure, the system will continue to monitor the pressure switch and set alarm if three open occurrences are detected
73	MAX GV SENSE OCC	Maximum Gas Valve Sense Occurrences Stored Prior to Service Output Is Energized	1	3	5	Occurrences	Service output activation. Maximum gas valve sense occurrences stored before service output is energized. ***NOTE:*** *Heating stage is not locked out.*
74	HT GAS STG UP TMR	Gas Stage Up Timer	0	912	3600	Seconds	• Stage-up timer. The maximum time that lower stage runs before calling next heat stage. Used in room sensor applications. • Disabled if set to 0.
75	HT GAS STG DWN TMR	Gas Stage Down Timer	0	0	3600	Seconds	• Time delay before a lower stage turns off following a higher stage termination. • Used in room sensor applications.

Table 59. CORE Control System Unit Parameters							
Control Parameter No	Screen Name	Parameter Short Description	Control Value			Units	Description
			Min.	Default	Max.		
Block 4 Cooling Parameters							
78	COOL DOWN DELAY	Cool Down Time Delay	0	30	136	Minutes	• Cool down time delay. Time that Y2 is ignored during cool down period (when first occupied + cool demand) • This delay is only used if an economizer is used and the outdoor air is suitable.
79	COOL BLR ON DELAY	Cooling Blower On Time Delay	0	See section 3.3.9. on page 20 for defaults.	60	Seconds	The time before the blower turns on after a cooling demand.
80	COOL BLR OFF DELAY	Cooling Blower Off Time Delay	0	See section 3.3.10. on page 20 for defaults.	240	Seconds	The time the blower stays on after the cooling demand is lost.
81	MAX FREEZE STAT OCC	Maximum Freeze Thermostat Occurrence	1	3	3	Occurrences	Service output activation and compressor lockout. Maximum freeze thermostat occurrences are stored before service relay is energized and compressor is locked-out.
82	COND FAN RESTRT DLY	Condenser Fan Restart Time Delay	0	6	16	Seconds	Low ambient anti-windmilling condenser fan delay. The time period that the last operating fan is turned off before starting the next fan.
83	LAC SP TEMP 1	Low Ambient Outdoor Air Limit Temperature 1 Set Point	10	40	60	ºF	• Low ambient outdoor air limit temp. 1. Parameters 83 and 84 are used to shed fans. • Temperature setting must be less than or equal to Parameter 84.
84	LAC SP TEMP 2	Low Ambient Outdoor Air Limit Temperature 2 Set Point	10	55	60	ºF	• Low ambient outdoor air limit temp. 2. Parameters 83 and 84 are used to shed fans. • Temperature setting must be greater than or equal to Parameter 83.
85	COMP1 LO TMP LCKOUT	Low Ambient Temperature Lockout for Compressor 1	-31	Default may be altered at factory test.	80	ºF	• Low ambient lockout for compressor 1. • A value of (-31°F) will disable low ambient lockout function. • Temperature setting must be less than or equal to Parameter 86.
86	COMP2 LO TMP LCKOUT	Low Ambient Temperature Lockout for Compressor 2	-31	Default may be altered at factory test.	80	ºF	• Low ambient lockout for compressor 2. • A value of (-31ºF) will disable low ambient lockout function. • Temperature setting must be greater than or equal to Parameter 85 and less than or equal to Parameter 87.
87	COMP3 LO TMP LCKOUT	Low Ambient Temperature Lockout for Compressor 3	-31	Default may be altered at factory test.	80	ºF	• Low ambient lockout for compressor 3. • A value of (-31ºF) will disable low ambient lockout function. • Temperature setting must be greater than or equal to Parameter 86 and less than or equal to Parameter 88.
88	COMP4 LO TMP LCKOUT	Low Ambient Temperature Lockout for Compressor 4	-31	Default may be altered at factory test.	80	ºF	• Low ambient lockout for compressor 4. • A value of (-31ºF) will disable low ambient lockout function. • Temperature setting must be greater than or equal to Parameter 87.
89	COMP MIN OFF DELAY	Compressor Minimum Off Delay	60	300	510	Seconds	Compressor minimum off delay.

Table 59. CORE Control System Unit Parameters							
Control Parameter No	Screen Name	Parameter Short Description	Control Value			Units	Description
			Min.	Default	Max.		
91	COMP MIN RUN TIME	Compressor Minimum Run Time	60	240	510	Seconds	Compressor minimum run time.
98	MAX HP OCCURRENCES	Maximum High Pressure Occurrences	1	3	7	Occurrences	Maximum High Pressure occurrences that are stored before control locks off compressor stage and energizes the service output.
99	MAX LP OCCURRENCES	Maximum Low Pressure Occurrences	1	3	7	Occurrences	Maximum Low Pressure occurrences that are stored before control locks off compressor stage and energizes the service relay.
100	LP SW IGNORE TIME	Low Pressure Switch Ignore Time	0	120	600	Seconds	Low Pressure Switch Ignore Time
101	CL STG 2 STGUP TIME	Maximum Stage 1 Cooling Time Before Call for Stage 2 Cooling	0	912	3600	Seconds	• Stage 2 stage up timer. The maximum time that cooling stage 1 runs before calling cooling stage 2. • Used in room sensor applications. • Disabled if set to 0.
102	CL STG 3 STGUP TIME	Maximum Stage 2 Cooling Time Before Call for Stage 3 Cooling	0	912	3600	Seconds	• Stage 3 stage up timer. The maximum time that cooling stage 2 runs before calling cooling stage 3. • Used in room sensor applications. • Disabled if set to 0.
103	CL STG 4 STGUP TIME	Maximum Stage 3 Cooling Time Before Call for Stage 4 Cooling	0	912	3600	Seconds	• Stage 4 stage up timer. The maximum time that cooling stage 3 runs before calling cooling stage 4. • Used in room sensor applications. • Disabled if set to 0
104	CL STAGE DOWN TIME	Cooling Stage Down Time	0	912	3600	Seconds	• Time delay before a lower stage turns off following a higher stage termination. • Used in room sensor applications.
105	DEHUMID MODE	Dehumidification Mode	0	0 - No Humiditrol is installed 6 - All Others (Check Unit Parameter Label)	7	Option	Dehumidification Mode • **0** = No reheat. • **1** = Supermarket reheat using De-Humidistat (wired thermostat mode only) • **2** = Supermarket reheat using relative humidity sensor. • **3** = Humiditrol reheat. Conditions: Blower must be energized, Must be occupied, At least one previous cooling demand. • **4** = Relative Humidity measurement / display. No Supermarket or Humiditrol reheat. • **5** = Humiditrol reheat. Conditions: At least one previous cooling demand. • **6** = Humiditrol reheat. Conditions: Blower must be energized, Must be occupied. • **7** = Humiditrol reheat. Conditions: None

Table 59. CORE Control System Unit Parameters							
Control Parameter No	Screen Name	Parameter Short Description	Control Value			Units	Description
			Min.	Default	Max.		
106	DEHUMID SETPOINT	Dehumidification Set Point	0	Default may be altered at factory test.	99	% RH	• Percent relative humidity where supermarket or Humiditrol reheat demand is energized. Used of dehumid mode option 2, 3, 5, 6 or 7. Dehumidification is de-energized at set point – dead-band (Parameter 107)). • Digital Input 4 only. Energized input signal calls for dehumidification demand. L Connection Network Relative Humidity set point will override this set point. (Such as from NCP).
107	DEHUMID DEADBAND	Dehumidification Dead Band (neutral zone)	1	3	10	% RH	Used of dehumidification Parameter 105, option 2, 3, 5, 6 or 7. Dehumidification is: • ON when relative humidity is equal to or greater than Parameter 106. • OFF when Relative Humidity is less than Parameter 106 minus Parameter 107.
108	FREE LO AMB LCKT SP	Free Cooling Low Ambient Lockout Set Point	45	55	80	°F	When outdoor air is suitable for free cooling and an economizer is present, the compressor will not run when ambient is below this value.
109	SMOKE ALARM CONTROL	Smoke Alarm Control	0	0	13	Option	Smoke alarm control options. • **0** = Blower off, exhaust fan off and fresh air damper closed. • **2** = Blower off, exhaust fan on and fresh air damper closed. • **9** = Blower on, exhaust fan off and fresh air damper opened. • **10** = Blower on, exhaust fan on and fresh air damper closed. • **11** = Blower on, exhaust fan on and fresh air damper opened.
110	ERR TIME OFF DELAY	Error Time Off Delay	64	300	1800	Seconds	Off time delay if a “no-run” error occurs.
111	COOL STAGING OPTION	Cooling Staging Option	0	Default may be altered at factory test.	4	Option	Cooling staging options: • **0** = No cooling operation • **1** = Wired thermostat operation, Two cooling stages and units with Economizers > Y1 = Free Cooling, > Y2 = Adds all mechanical stages. • **2** = Wired thermostat operation. Two cooling stages and Units with Economizers > Y1 - Free Cooling > Y2 - adds first stage of mechanical. • **3** = Wired thermostat operation. Three cooling stages. > Y1 only - first stage, > Y2 only - second stage, > Y1+Y2 - third stage. ***NOTE:*** *Units with Economizers Y2 only adds first stage of mechanical, Y1+Y2 adds first and second stage of mechanical.* • 4 = Discharge air control. Up to four stages.

Table 59. CORE Control System Unit Parameters							
Control Parameter No	Screen Name	Parameter Short Description	Control Value			Units	Description
			Min.	Default	Max.		
Block 5 Miscellaneous Parameters							
112	HEAT STAGING OPTION	Heating Staging Option	0	2	2	Option	Heating staging options: • 0 = No heating operation. • 1 = Discharge air control with up to four stages. • 2 = Thermostat operation.
113	EN RET AIR TMP LMT	Enable Return Air Temperature Limit	0	0	1	Option	• Enables return air temperature limit option. • Return air limits may be used for limiting zone temperatures. Continuous fan operation recommended.
114	COOL RET AIR LIMIT	Cooling Return Air Limit	60	65	80	°F	• Return air limit for cooling. If the return air cooling limit is exceeded, the cooling demands are interrupted. • Parameter 113 must be set to 1 to enable.
115	HEAT RET AIR LIMIT	Heating Return Air Limit	60	85	100	°F	• Return air limit for heating. If the return air heating limit is exceeded, the heating demands are interrupted. • Parameter 113 must be set to 1 to enable.
117	DCV MAX DAMPER OPEN	Demand Control Ventilation Maximum Damper Open	0	50	100	%	Maximum allowed demand control ventilation damper open position.
118	DCV DAMP START OPEN	Demand Control Ventilation Damper Start Open	0	700	2000	PPM	• Damper “start open” CO_2 set point for Demand Control Ventilation. • Level where fresh air damper begins to open.
119	DCV DAMP FULL OPEN	Demand Control Ventilation Maximum Damper Full Open Set Point	0	1200	2000	PPM	• Damper “full open” CO_2 set point for Demand Control Ventilation. • Level where fresh air damper is opened to maximum.
120	DCV HI TMP OV FL CL	Demand Control Ventilation Outdoor Air Control Hi Temperature Override Full Closed	-31	105	132	°F	High outdoor air temp. where fresh air damper is closed to minimum position.
121	DCV HI TMP OV ST CL	Demand Control Ventilation Outdoor Air Control Hi Temperature Override Start Closing	-31	75	132	°F	High outdoor air temperature where fresh air damper begins to close.
122	DCV LO TMP OV FL CL	Demand Control Ventilation Outdoor Air Control Low Temperature Override Full Closed	-31	10	132	°F	Low outdoor air temperature where fresh air damper is closed to minimum position

Table 59. CORE Control System Unit Parameters							
Control Parameter No	Screen Name	Parameter Short Description	Control Value			Units	Description
			Min.	Default	Max.		
123	DCV LO TMP OV ST CL	Demand Control Ventilation Outdoor Air Control Low Temperature Override Start Closing	-31	40	132	°F	Low outdoor air temp. where fresh air damper begins to close.
127	OAC MANUAL RESET	Outdoor Air Control Manual Reset	0	50	100	%	Manual reset value.
128	OAC PID P CONSTANT	Outdoor Air Control PID P Constant	0	2	127	Counts	Outdoor Air Control PID P Constant
129	OAC PID I CONSTANT	Outdoor Air Control PID I Constant	0	30	127	Counts	Outdoor Air Control PID I Constant
130	OAC PID D CONSTANT	Outdoor Air Control PID D Constant	0	0	127	Counts	Outdoor Air Control PID D Constant
131	FREE CL MAX DAMPER	Free Cooling Maximum Damper	0	100	100	%	The maximum allowed fresh air damper opening for free cooling.
132	MIN DAMPER POSITION	Minimum Damper Position	0	0	100	%	Minimum fresh air damper position during occupied operation.
133	ZONE SENS STRTUP DLY	Room Sensor Start-up Delay	2	2	30	Minutes	• Suspends all unit operation room sensor and Constant Air Volume with bypass damper applications. • Suspends Fresh Air Heat Control-Reheat, Fresh Air Cooling Control, Fresh Air Heat Control options and all GP outputs. • May be used to stagger unit start-ups. Does NOT delay demands in thermostat mode.
134	IAQ INPUT MODE	Indoor Air Quality Input Mode	0	1	7	Option	Options are: • 0 = Ventilation is disabled. • 1 = Demand control ventilation with outdoor temperature limit and blower on. (Default) • 2 = Demand control ventilation without Outdoor Temperature Limit and Blower ON. • 3 = Demand control ventilation with Outdoor Temperature Limit and Blower AUTO / ON. • 4 = Demand control ventilation without Outdoor temperature Limit and no blower AUTO / ON. • 5 = Outdoor air control with outdoor temperature limit. • 6 = Outdoor air control without outdoor temperature limit • 7 = Building pressure control
System 1 Parameters							
137	OCC HEAT STPT	Occupied Heating Set Point	40	Default may be altered at factory test.	95	°F	• Backup occupied heating set point. • Used if the communications link is lost for 5 minutes between the M3 and NCP. Used only with room sensor applications. • Set point temperature must be less than or equal to (Parameter 139 minus Parameter 152).

Table 59. CORE Control System Unit Parameters							
Control Parameter No	Screen Name	Parameter Short Description	Control Value			Units	Description
			Min.	Default	Max.		
138	UNOCC HEAT STPT	Unoccupied Heating Set Point	40	60	95	°F	• Backup unoccupied heating set point. Used if the communications link is lost for 5 minutes between the unit controller and NCP. • Used only in room sensor applications. • Set point temperature must be less than or equal to (Parameter 140 minus Parameter 152).
139	OCC COOL STPT	Occupied Cooling Set Point	40	75	95	°F	• Backup occupied cooling set point. • Used if the communications link is lost for 5 minutes between the unit controller and NCP. Used only in room sensor applications. • Set point temperature must be greater than or equal to Parameter 137 plus Parameter 152).
140	UNOCC COOL STPT	Unoccupied Cooling Set Point	40	85	95	°F	• Backup unoccupied cooling set point. • Used if the communications link is lost for 5 minutes between the CORE Unit Controller and network control panel. Used only in room sensor applications. • Set point temperature must be greater than or equal to Parameter 138 plus Parameter 152).
141	AFTERHOUR OVRRD DLY	After Hours Override Time Delay	0	60	480	Minutes	• After hours override timer. • Only used on room sensor applications without a network control panel.
142	HEAT STAGE DEADBAND	Heat Stage Deadband	1	1	3.75	°F	• Heating dead-band. Used only with CORE Unit Controller room sensor applications. • Dead band must be less than or equal to Parameter 152 minus Parameter 143.
143	COOL STAGE DEADBAND	Cool Stage Deadband	1	1	3.75	°F	• Cooling dead-band. Used only with room sensor applications. • Dead band must be less than or equal to Parameter 152 minus Parameter 142.
144	COOL STAGE1 DIFFER	Cooling Stage 1 Differential	0	0.5	3	°F	• Cooling stage 1 differential. Used only with room sensor applications. • Differential temperature must be less than or equal to Parameter 145.
145	COOL STAGE2 DIFFER	Cooling Stage 2 Differential	0	1	3	°F	• Cooling stage 2 differential. Used only with room sensor applications. • Differential temperature must be greater than or equal to Parameter 144 and less than or equal to Parameter 146.
146	COOL STAGE3 DIFFER	Cooling Stage 3 Differential	0	1.5	3	°F	• Cooling stage 3 differential. Used only with room sensor applications. • Differential temperature must be greater than or equal to Parameter 145 and less than or equal to Parameter 147.
147	COOL STAGE4 DIFFER	Cooling Stage 4 Differential	0	2	3	°F	• Cooling stage 4 differential. Used only with room sensor applications. • Differential temperature must be greater than or equal to Parameter 146.

Table 59. CORE Control System Unit Parameters							
Control Parameter No	Screen Name	Parameter Short Description	Control Value			Units	Description
			Min.	Default	Max.		
148	HEAT STAGE1 DIFFER	Heating Stage 1 Differential	0	0.5	3	°F	• Heating stage 1 differential. Used only with room sensor applications. • Differential temperature must be less than or equal to Parameter 149.
149	HEAT STAGE2 DIFFER	Heating Stage 2 Differential	0	1	3	°F	• Heating stage 2 differential. Used only with room sensor applications. • Differential temperature must be greater or equal to Parameter 148.
150	HEAT STAGE3 DIFFER	Heating Stage 3 Differential	0	1.5	3	°F	• Heating stage 3 differential temperature. Used only with room sensor applications. • Differential temperature must be greater than or equal to Parameter 149.
151	HEAT STAGE4 DIFFER	Heating Stage 4 Differential	0	2	3	°F	• Heating stage 4 differential temperature. Used only with room sensor applications. • Differential temperature must greater than or equal to Parameter 150.
152	AUTO CHGOVR DEADBND	Automatic Changeover Deadband	2	3	10	°F	• Minimum auto changeover dead-band temperature. Dead band must be greater than or equal to Parameter 142 plus Parameter 143. • Used in room sensor applications.
153	AUTO CHGOVR DELAY	Automatic Changeover Delay	1	Default may be altered at factory test.	15	Minutes	Auto changeover time delay. Delay between heating and cooling modes.
154	OCC BLOWER MODE	Occupied Blower Mode		AUTO-CYCLES		Option	Blower control option for room sensor applications during occupied periods. • **Auto Cycle**: Blower cycles with demand • **On-Continuous 1**: blower is on with either the occupancy sensor or occupancy schedule indicates occupied. • **On-Continuous 2**: Blower is on only when both the occupancy sensor and occupancy scheduler indicates occupied. • **On-Continuous 3**: lower is on only when both the occupancy sensor and occupancy scheduler indicates occupied. in addition, blower will be on a minimum of 25% of the time when occupancy scheduler indicates occupied by the occupancy sensor indicates not occupied. The 25% minimum is achieved by turning blower on for 30 minutes and off for 90 minutes.
155	FREECOOL LOCKOUT SP	Free Cooling Lockout Set Point	30	30	60	°F	• Locks out free cooling when outdoor temperature is below the set value. • Setting value to 29°F disables free cooling lockout.
156	FRESH AIR HEAT SP	See CORE System Application Guide for further details and to change the fresh air heat (FAH) set point. Modify the set point only using the method described in the reference section.					
157	FAH STAGE DEADBAND	Fresh Air Heating Stage Deadband	3	10	15	°F	Fresh Air Heating stage dead-band.
158	FAH MIN CYCLE TIME	Fresh Air Heating Minimum Cycle Time	120	480	1800	Seconds	Fresh Air heating minimum cycle time.

Table 59. CORE Control System Unit Parameters							
Control Parameter No	Screen Name	Parameter Short Description	Control Value			Units	Description
			Min.	Default	Max.		
159	FREE COOL SUPPLY SP	Free Cooling Supply Set Point	45	55	65	°F	Economizer modulates dampers to maintain supply air temperature (RT6) at this set point during free cooling. DACC reset applies. See Parameter 207 - Parameter 201
160	ECON FREECL TEMP SP	Economizer Free Cooling Temperature Set Point	40	60	75	°F	Outdoor Air Temperature is less than Parameter Set Point between 41-75°F, or when Outdoor Air temperature is less than Return Air Temperature between 0-40°F.
161	ECON FRCL TMP OFFSET	Economizer Free Cooling Temperature Offset	0	10	40	°F	Economizer Free Cooling Temperature Offset
162	ECON FREECL ENTH SP	Economizer Free Cooling Enthalpy Set Point	10	12	19	mA	Economizer Free Cooling Enthalpy Set Point
163	ECN FRCL ENTH OFFST	Economizer Free Cooling Enthalpy Offset	1	1	5	mA	Economizer Free Cooling Enthalpy Offset

Table 59. CORE Control System Unit Parameters							
Control Parameter No	Screen Name	Parameter Short Description	Control Value			Units	Description
			Min.	Default	Max.		
164	ECONOMIZER PROFILE	Economizer Profile	0	2	3	Option	These are the operating profile options for the economizer damper during free cooling when any compressor is on and can be selected as follows: • **Option 0:** Damper continues to modulate while compressors are on, but the effect of mechanical cooling may force the damper closed to its minimum position. After compressor starts, the free cooling setpoint is lowered to a fixed temperature of 45°F. • **Option 1:** Damper opens to its max open position (Parameter 131 - FREE CL MAX DAMPER) when any compressors start. ***NOTE:*** *When using Option 1 and after the compressor is stopped, the M3 will resume damper modulation.* • **Option 2:** Damper continues to modulate while compressors are on, but the effect of mechanical cooling may force the damper closed to its minimum position. This is the factory default setting. > Holds off compressor on Y2 call until damper has modulated to maximum position (Parameter 131 - FREE CL MAX DAMPER) for three minutes. > After three minutes, compressor starts and the free cooling setpoint is lowered to 45°F. Damper is not locked at maximum open while compressor is on, but modulates to maintain 45°F discharge air temperature. > When Y2 is satisfied, compressor goes off and free cooling setpoint is restored to 55°F (Parameter 159 - FREE COOL SUPPLY SP). • **Option 3:** Same as Option 2, but with a 10 minute delay instead of a three minute delay.
System 2 Parameters							
165	FAH STAGE DIFFER	Fresh Air Heating Stage Differential	0	2	20	°F	• Fresh Air Heating stage differential. • 0 value for first stage heating only for Fresh Air Heating.
166	FAH REHEAT OAT SP	Fresh Air Heating Control Reheat Outdoor Air Temperature Set Point	20	45	60	°F	Outdoor air temperature set point that enables fresh air heating for reheat demand and opens damper to Parameter 167 when outdoor air is less than set point.
167	FAH REHEAT DAMPER	Fresh Air Heating Control Reheat Damper Position	5	40	100	%	Fresh air damper position during Fresh Air Heating reheat operation.
168	FAH REHEAT SP	Fresh Air Heat Control Set Point	40	40	70	°F	Fresh Air Heating Reheat set point.

Table 59. CORE Control System Unit Parameters							
Control Parameter No	Screen Name	Parameter Short Description	Control Value			Units	Description
			Min.	Default	Max.		
169	FAT AUTO CHGOVR DLY	Fresh Air Tempering Automatic Changeover Delay	15	30	120	Minutes	Fresh Air Heating Control or Fresh Air Cooling Control air Tempering auto-changeover delay.
170	FRESH AIR COOL SP	See CORE System Application Guide for further details and to change the fresh air cool (FAC) set point. Modify the set point only using the method described in the reference section.					
171	FAC STAGE DEADBAND	Fresh Air Cooling Control Deadband	3	10	15	°F	Fresh Air Cooling stage dead-band.
172	FAC MIN CYCLE TIME	Fresh Air Cooling Control Cycle Time	120	480	1800	Seconds	Fresh Air Cooling minimum cycle time.
173	FAC STAGE DIFFER	Fresh Air Cooling Control Stage Differential	0	2	20	°F	• Fresh Air Cooling stage differential between stages. • Set to 0 for first stage cooling only for Fresh Air Cooling.
174	DACH OCC SETPOINT	Discharge Air Control Heating Occupied Set Point	60	110	140	°F	Discharge Air Control Heating set point during occupied period.
175	DACH UNOCC SETPOINT	Discharge Air Control Heating Unoccupied Set Point	60	95	140	°F	Discharge Air Control Heating set point during unoccupied period.
176	DACH STAGE DEADBAND	Discharge Air Control Heating Stage Deadband	5	5	20	°F	Discharge Air Control Heating dead-band.
177	DACH FAH STG UP TMR	Discharge Air Control Heating Stage-Up Time Delay	0	180	900	Seconds	Discharge Air Control Heating and Fresh Air Heating stage-up time delay.
178	DACH FAH STG DN TMR	Discharge Air Control Heating and Fresh Air Heating Control Stage-Down Time Delay	0	120	600	Seconds	Discharge Air Control Heating and Fresh Air Heating stage-down time delay.
179	DACH STAGE DIFFER	Discharge Air Control Heating Stage Differential	2	2	20	°F	Discharge Air Control Heating stage differential
180	DACC OCC SETPOINT	Discharge Air Control Cooling Occupied Set Point	40	55	80	°F	Discharge Air Control Cooling set point during occupied period.
181	DACC UNOCC SETPOINT	Discharge Air Control Cooling Unoccupied Set Point	40	65	100	°F	Discharge Air Control Cooling set point during unoccupied period.
182	DACC STAGE DEADBAND	Discharge Air Control Cooling Deadband Set Point	5	5	20	°F	Discharge Air Control Cooling stage dead-band.
183	DACC FAC STG UP TMR	Discharge Air Control Cooling and Fresh Air Cooling Stage-Up Delay	0	180	900	Seconds	Discharge Air Control Cooling and Fresh Air Cooling stage-up delay.
184	DACC FAC STG DN TMR	Discharge Air Control Cooling and Fresh Air Cooling Stage-Down Time Delay	0	120	600	Seconds	Discharge Air Control Cooling and Fresh Air Cooling stage-down time delay.

Table 59. CORE Control System Unit Parameters							
Control Parameter No	Screen Name	Parameter Short Description	Control Value			Units	Description
			Min.	Default	Max.		
185	DACC STAGE DIFFER	Discharge Air Cooling Stage Differential	2	2	20	°F	Discharge Air Cooling stage differential.
186	SRV OUTPT CTRL MODE	Service Output Control Mode	0	0	127	Option	A55 Service Output Control Mode = X + 32*Y + 16*Z **Input source = X:** • 0 = None • 1 = Compressor 1 duty cycle. (Compressor crankcase heater function.) > On when outdoor air temperature is less than or equal to Parameter 189 and greater than or equal to Parameter 192 seconds have passed with compressor 1 off. > Off when Outdoor Air temperature is greater than Parameter 189 plus 3°F (fixed dead-band) or is less than Parameter 192 seconds have passed with compressor 1 off • 2 = On when occupied. • 3 = On when blower on, • 4 = On when heating demand. • 5 = On when cooling demand. • 6 = On when heating or cooling demand. • 7 = System Relative Humidity (A55_P298_5 RH) • 8 = System Indoor Air Quality. (A55_P298_3 IAQ) • 9 = System Outdoor Air Temperature (A55_P267_1/2 OAT) • 10 = Energy Recovery System • 11 = SCR Option for Electric Heat **Algorithm Y for input sources** 7 - 9: • 0 = Hysteresis loop (see sections 14.2 - 14.4) • 1 = Window - On when input is in range; (see sections 14.2 - 14.4) • 2 = Delayed-on. (see sections 14.2 - 14.4) • 3 = Delayed-off. (see sections 14.2 - 14.4) **Inversion Z:** • 0- Output not inverted. • 1- Output inverted.
187	SRV OUTPT SP C02	Service Output Set Point for Carbon Dioxide	0	996	2000	ppm	A55 service relay output set point.
188	SRV OUTPT SP RH	Service Output Set Point for Relative Humidity	0	100	100	%	Service Output Set Point for Relative Humidity
189	SRV OUTPT SP TEMP	Service Output Set Point Temperature	-31	51	132	°F	Service Output Set Point Temperature

Table 59. CORE Control System Unit Parameters							
Control Parameter No	Screen Name	Parameter Short Description	Control Value			Units	Description
			Min.	Default	Max.		
190	SRV OUTPT DB C02	Service Output Deadband for Carbon Dioxide	16	102	2000	ppm	A55 service relay output dead-band or delay.
191	SRV OUTPT DB RH	Service Output Deadband for Relative Humidity	2	13	100	%	Service Output Deadband for Relative Humidity
192	SRV OUTPT DB TEMP	Service Output Deadband for Temperature	1	8	162	°F	Service Output Deadband for Temperature
193	SRV OUTPT DELAY	Service Output Delay	64	416	8160	Seconds	Service Output Delay
194	LOAD SHED NUM COMP	Number of compressors to shed during load shedding	0	0	4	Option	Number of compressors to be turned off when load shedding is active. Applicable to Standard Efficiency 3- to 6-ton units only. 2-stage compressor, a value of one shuts off 2nd stage only and a value of 2 turns compressor completely off.
196	MAC ADDRESS	MAC Address	0	128	128	Address	BACnet MAC Address. A value of 0-128 sets the BACnet MAC address to that value.
197	BAUD RATE	Baud Rate		9.6K 19.2K 38.4K 76.8K		Option	Baud rate setting.
System 3 Parameters							
201	DACC OAT RS ADJ BND	Discharge Air Control Cooling Outdoor Air Temperature Adjustment Band	0	0	30	°F	• Discharge Air Control Cooling outdoor temperature ambient cooling adjustment reset band. • Also used to reset free cooling set point (Parameter 159).
202	DACC OAT RS ADJ SP	Discharge Air Control Cooling Outdoor Air Temperature Cooling Reset Set Point	40	80	100	°F	• Discharge Air Control Cooling outdoor air temperature cooling reset set point. • Also used to reset free cooling set point (Parameter 159).
203	DACC OAT RS PRP BND	Discharge Air Control Cooling Outdoor Ambient Air Temperature Cooling Proportional Band	1	20	60	°F	• Discharge Air Control Cooling outdoor ambient temperature cooling proportional band. • Also used to reset free cooling set point (Parameter 159).
204	DACC RAT RS ADJ BND	Discharge Air Control Cooling Return Air Reset Adjustment Band	0	0	30	°F	• Discharge Air Control Cooling return air reset adjustment band. 0 disables return air cooling reset. • Also used to reset free cooling set point (Parameter 159).
205	DACC RAT RS ADJ SP	Discharge Air Control Return Air Reset Adjustment Set Point	50	70	80	°F	• Discharge Air Control Cooling return air reset set point. • Also used to reset free cooling set point (Parameter 159).
206	DACC RAT RS PRP BND	Discharge Air Control Cooling Return Air Reset Proportional Band	1	10	30	°F	• Discharge Air Control Cooling return air reset proportional band. • Also used to reset free cooling set point (Parameter 159).

Table 59. CORE Control System Unit Parameters							
Control Parameter No	Screen Name	Parameter Short Description	Control Value			Units	Description
			Min.	Default	Max.		
207	DACC RS LIMIT	Discharge Air Control Cooling Reset Limit	5	10	20	°F	• Discharge Air Control Cooling total reset limit. This limits the total DACC reset allowed. • Also used to reset free cooling set point (Parameter 159).
208	DACH OAT RS ADJ BND	Discharge Air Control Heating Outdoor Air Temperature Reset Adjustment Band	0	0	30	°F	Discharge Air Control Heating outdoor temperature reset adjustment band.
209	DACH OAT RS ADJ SP	Discharge Air Control Heating Reset Adjustment Set Point	-31	40	60	°F	Discharge Air Control Heating outdoor temperature reset set point.
210	DACH OAT RS PRP BND	Discharge Air Control Heating Outdoor Air Temperature Reset Proportional Band	1	20	60	°F	Discharge Air Control Heating temperature reset proportional band.
211	DACH RAT RS ADJ BND	Discharge Air Control Heating Return Air Temperature Adjustment Band	0	0	30	°F	Discharge Air Control Heating return reset adjustment band.
212	DACH RAT RS ADJ SP	Discharge Air Control heating Return Air Heating Reset Set Point	50	70	80	°F	Discharge Air Control Heating return air heating reset set point.
213	DACH RAT RS PRP BND	Discharge Air Control Heating Return Air Heading Reset Proportional Band	1	10	30	°F	Discharge Air Control Heating return air heating reset proportional band.
214	DACH RS LIMIT	Discharge Air Control Heating Return Air Heating Reset Limit	5	10	20	°F	Discharge Air Control Heating reset limit. This limits the total DACH reset allowed.
215	EXH FN STG1 DAMP SP	Exhaust Fan Stage 1 Damper Set Point	0	50	100	%	Exhaust fan stage 1 damper set point.
216	EXH FN STG1 DAMP DB	Exhaust Fan Stage 1 Damper Deadband	0	Default may be altered at factory test.	100	%	Exhaust Fan Stage 1 Damper Deadband
217	EXH FN STG1 PRES SP or VFD PE PRES SP	Stage 1 set point or VFD PE set point	-0.5	0.05	0.5	in w.c.	Exhaust Fan Stage 1 Pressure Set Point. or VFD Power Exhaust Building Pressure Set Point.
218	EXH FN STG1 PRES DB	Stage 1 deadband	0	0.02	1	in w.c.	Exhaust Fan Stage 1 Pressure Deadband.
219	EXH FN STG2 DAMP SP	Exhaust Fan Stage 2 Damper Set Point	0	75	100	%	Exhaust Fan Stage 2 Damper Set Point
220	EXH FN STG2 DAMP DB	Exhaust Fan Stage 2 Damper Deadband	0	10	100	%	Exhaust Fan Stage 2 Damper Deadband

Table 59. CORE Control System Unit Parameters							
Control Parameter No	Screen Name	Parameter Short Description	Control Value			Units	Description
			Min.	Default	Max.		
221	EXH FN STG2 PRES SP	Stage 2 setpoint	-0.5	0.10	0.5	in w.c.	Exhaust Fan Stage 2 Pressure Set Point
222	EXH FN STG2 PRES DB	Stage 2 deadband	0	0.05	1	in w.c.	Exhaust Fan Stage 2 Pressure Deadband.
223	EXH FAN STGUP DELAY	Exhaust Fan Stage Up Delay	0	100	300	Seconds	Exhaust Fan Stage Up Delay
224	EXH FAN STGDWN DLAY	Exhaust Fan Stage Down Delay	0	100	200	Seconds	Stage 1 off-delay. (Only used for 2 stage operation)
228	CL LO CFM CALIB	Advanced Airflow Low Speed Calibration	-1200	0	1200	Count	• Applicable to Standard Efficiency 3- to 6-ton units only. • If the absolute value of this Parameter is greater than Parameter 17. then this is not considered in target calculation.
229	CL HI SPD CALIB	Advanced Airflow Hi Speed Calibration	-1200	0	1200	Count	• Applicable to Standard Efficiency 3- to 6-ton units only. • If the absolute value of this Parameter is greater than Parameter 14, then this is not considered in target calculation
230	CL MED LO SPD CALIB	Advanced Airflow Medium Speed Calibration	-1200	0	1200	Count	Applicable to Standard Efficiency 3- to 6-ton units only.
231	CL MED HI SPD CALIB	Advanced Airflow Medium High Speed Calibration	-1200	0	1200	Count	Applicable to Standard Efficiency 3- to 6-ton units only.
232	HEAT CFM CALIB	Advanced Airflow Heat CFM Calibration	-1200	0	1200	Count	Applicable to Standard Efficiency 3- to 6-ton units only.
233	VENT CFM CALB	Advanced Airflow Vent CFM Calibration	-1200	0	1200	Count	Applicable to Standard Efficiency 3- to 6-ton units only.
234	LO SP CFM ALARM SP	Advanced Airflow Low Speed CFM Alarm Set Point	15	25	100	%	Applicable to Standard Efficiency 3- to 6-ton units only.
235	LO SP CFM ALARM EU	Advanced Airflow Low Speed CFM Alarm Evaluation	0	1800	3600	Seconds	Applicable to Standard Efficiency 3- to 6-ton units only.
236	NO AIRFLOW ALARM EU	Advanced Airflow No Airflow Alarm Evaluation	0	20	300	Count	Applicable to Standard Efficiency 3- to 6-ton units only.
237	OUTDOOR AIR TARGET	Outdoor Air Target	0	0	750	CFM	Applicable to Standard Efficiency 3- to 6-ton units only.
238	OUTDOOR CFM CALIB	Advanced Airflow Outdoor CFM Calibration	-600	0	600	Count	Applicable to Standard Efficiency 3- to 6-ton units only.
239	LO OD CFM ALARM SP	Advanced Airflow Outdoor CFM Alarm Set Point	15	25	100	%	Applicable to Standard Efficiency 3- to 6-ton units only.
240	HI OD CFM ALARM SP	Advanced Air Flow High Outdoor CFM Alarm Set Point	15	25	100	%	Applicable to Standard Efficiency 3- to 6-ton units only.
241	MAX OD CFM DCV SP	Advanced Airflow Maximum Outdoor CFM Demand Control Ventilation Set Point	0	600 (3-ton Unit) 800 (4-ton Unit) 1000 (5-ton Unit)	2400	CFM	Applicable to Standard Efficiency 3- to 6-ton units only.

Table 59. CORE Control System Unit Parameters							
Control Parameter No	Screen Name	Parameter Short Description	Control Value			Units	Description
			Min.	Default	Max.		
243	LO OD CFM ALARM EU	Advanced Air Flow Low Outdoor CFM Alarm Evaluation	0	1800	3600	Seconds	Applicable to Standard Efficiency 3- to 6-ton units only.
244	HI OD CFM ALARM EU	Advanced Air Flow High Outdoor CFM Alarm Evaluation	0	1800	3600	Seconds	Applicable to Standard Efficiency 3- to 6-ton units only.
245	OD DP ERR ALARM EU	Advanced Airflow Outdoor Air Damper Error Alarm Evaluation	0	1800	3600	Seconds	Applicable to Standard Efficiency 3- to 6-ton units only.
246	ALTITUDE STPT	Advanced Airflow Altitude Set Point	0	650	25000	Feet	Applicable to Standard Efficiency 3- to 6-ton units only.
247	BLR CALIB RAMP RATE	Blower Calibration Ramp Rate	4	10	40	%	Applicable to Standard Efficiency 3- to 6-ton units only.
258	DISPLAY UNITS F/C	Display Unit (Fahrenheit or Celsius)		FAHRENHEIT or CELSIUS		Option	Temperature unit of measurement.
285	FRCL COMP LCKOUT MD	Free Cooling Compressor Lockout Mode	0	2	2	Option	• 0 = Disable Free Cooling Low Ambient Compressor Lockout (default). • 1 = Lockout Compressor whenever the outdoor air is suitable regardless of outdoor air temperature. • 2 = Enable Free Cooling Low Ambient Compressor Lockout.
287	ALGORITHMS ENABLED	Algorithms Enabled	***NOTE:*** *Options for Parameter 287 are not accessible via the CORE Unit Controller user interface. Options can be set using the Lennox UC software.* Here is an example of the selection options for Algorithms Enable via the Lennox UC Software: **Set Bit Description** 0x00000002 Enable Fresh Air Heating (ALGO_FAH) 0x00000004 Enable Fresh Air Cooling (ALGO_FAC) 0x00000008 Enable DACC Return Air Reset (ALGO_DACC_RAT_RESET) 0x00000010 Enable DACC Outdoor Air Reset (ALGO_DACC_OAT_RESET) 0x00000020 Enable DACH Return Air Reset (ALGO_DACH_RAT_RESET) 0x00000040 Enable DACH Outdoor Air Reset (ALGO_DACH_OAT_RESET) 0x00000080 Enable Supply Static Pressure Sensor Alarm (ALGO_LO_STATIC_PRESSURE_ ALARM) 0x00000100 Enable Low Outdoor Temp override of DCV/OAC operation (ALGO_LO_OAT_ DCV_OAC_OVERRIDE) 0x00000200 Enable High Outdoor Temp override of DCV/OAC operation (ALGO_HI_OAT_ DCV_OAC_OVERRIDE) 0x00000800 Enable Free Cooling Blower Stage Up .					
305	LON HEARTBEAT TIME	LonTalk Heartbeat Time	0	100	10,000	Seconds	Heartbeat configuration proprieties define how often a network variable update is transmitted from a sending node.
313	FAH REHEAT MODE	Fresh Air Reheat Mode	0	0	3	Option	• 0 = Disabled • 1 = Allowed, must be occupied • 2 = Allowed, blower must be energized and in occupied mode. • 3 = Allow. No conditions apply.

Table 59. CORE Control System Unit Parameters							
Control Parameter No	Screen Name	Parameter Short Description	Control Value			Units	Description
			Min.	Default	Max.		
314	MSAV MIN VFD DR OUT	MSAV Minimum VFD Drive Output	10	33	50	%	The CORE Unit Controller will ensure that active VFD drive output is equal or greater than Minimum VFD drive output. If conversion from CFM setting to VFD drive yields lower value. The system will use Minimum VFD drive output instead output.
317	OUT AIR UNIT OPTNS	Outdoor Air Unit Options	0	0	2	Option	This Parameter is applicable in Zone Sensor mode (i.e. not applicable for local/ remote thermostat mode).
321	ENTH HIGH TMP LIMT	Enthalpy High Temperature Limit	45	75	85	°F	When in Enthalpy mode, the outdoor air suitability (OAS) will be set only if the outdoor air temperature is lesser than this Parameter set point.
323	ZON SNSR CAL OFFSET	Zone Sensor Calibration Offset	-5	0	5	°F	This setting is applicable to local temperature sensor only.
327	BPC MANUAL RESET	Building Pressure Control Manual Reset	0	50	100	%	Manual reset value. This Parameter defines the default outdoor air damper position
328	BPC PID P CONST	Building Pressure Control PID P Constant	0	100	127	Count	BPC PID Proportional Constant
329	BPC PID I CONST	Building Pressure Control PID I Constant	0	30	127	Count	BPC PID Integral Constant
330	GP A02 MODE	General Purpose A02 Mode	0	0	12	Mode Selection	• 1 - Occupied - PID set point A; Unoccupied - PID set point B • 2 - Occupied - PID set point A; Unoccupied -Staged output B • 3 - Occupied - Staged output A; Unoccupied - PID set point B • 4 - Occupied - Staged output A; Unoccupied - Staged output B • 5 - Blower On - PID set point A; Blower Off - PID set point B • 6 - Blower On - PID set point A; Blower Off - Staged output B • 7 - Blower On - Staged output A; Blower Off - PID set point B • 8 - Blower On - Staged output A; Blower Off - Staged output B • 9 - DI2 on - PID set point B (1); DI3 on - PID set point A (2); Otherwise off. • 10 - DI2 on - PID set point B (1); DI3 on - Staged Output A (2); Otherwise off. • 11 - DI2 on - PID set point B (1); DI3 on - Staged Output A (2); Otherwise off. • 12 - Reserved • (1) -DI3 (on M3) doesn't matter • (2) -DI2 (on M3) is off
331	GP A02 SP A	General Purpose A02 Set Point A	0	0	100	%	Analog output channel 2, set point A.
332	GP A02 SP B	General Purpose A02 Set Point B	0	0	100	%	Analog output channel 2, set point B.
333	GP A02 STG A	General Purpose A02 Stage A	0	0	100	%	Analog output channel 2, stage A
334	GP A02 STG B	General Purpose A02 Stage B	0	0	100	%	Analog output channel 2, stage B

Table 59. CORE Control System Unit Parameters							
Control Parameter No	Screen Name	Parameter Short Description	Control Value			Units	Description
			Min.	Default	Max.		
335	GP A02 OUTPUT	General Purpose A02 Output	0	0	1	Selection	• 0 = PWM • 1 = 0-10 VDC
336	GP A02 PWM FREQ	General Purpose A02 Pulse-Width Modulation Frequency	50	200	2000	Hz	Analog output PWM frequency.
337	GP A02 KP	General Purpose A02 Proportional Constant for PID	0	0	100	Count	Analog output channel 2 PID loop proportional constant.
338	GP A02 KI	General Purpose A02 Integral Constant for PID	0	0	100	Count	Analog output channel 2 PID loop integral constant.
340	GP A02 MIN OUPUT	General Purpose A02 Minimum Output	0	0	100	%	Analog output channel 2 minimum output.
341	GP A02 MAX OUPUT	General Purpose A02 Maximum Output	0	100	100	%	Analog output channel 2 maximum output.
342	GP A02 SOURCE	General Purpose A02 Source	1	1	3	Selection	Source/feedback for the PID loop. • 1 = Analog input 1 on GP3 A02 • 2 = Analog input 2 on GP3 A02 • 3 = Analog input 3 on GP3 A02
343	GP A02 CYCL INTRVL	General Purpose A02 Cycle Interval	0	1	180	Seconds	Frequency of execution of PID loop.
344	GP A03 MODE	General Purpose A03 Mode	0	0	11	Mode Selection	• 1 - Occupied - PID set point A; Unoccupied - PID set point B • 2 - Occupied - PID set point A; Unoccupied -Staged output B • 3 - Occupied - Staged output A; Unoccupied - PID set point B • 4 - Occupied - Staged output A; Unoccupied - Staged output B • 5 - Blower On - PID set point A; Blower Off - PID set point B • 6 - Blower On - PID set point A; Blower Off - Staged output B • 7 - Blower On - Staged output A; Blower Off - PID set point B • 8 - Blower On - Staged output A; Blower Off - Staged output B • 9 - DI2 on - PID set point B (1); DI3 on - PID set point A (2); Otherwise off. • 10 - DI2 on - PID set point B (1); DI3 on - Staged Output A (2); Otherwise off. • 11 - DI2 on - PID set point B (1); DI3 on - Staged Output A (2); Otherwise off. • 12 - Reserved • (1) -DI3 (on M3) doesn't matter • (2) -DI2 (on M3) is off
345	GP A03 SP A	General Purpose A03 Set Point A	0	0	100	%	Analog output channel 3, set point A.
346	GP A03 SP B	General Purpose A03 Set Point B	0	0	100	%	Analog output channel 3, set point B.
347	GP A03 STG A	General Purpose A03 Stage A	0	0	100	%	Analog output channel 3, stage A

Table 59. CORE Control System Unit Parameters							
Control Parameter No	Screen Name	Parameter Short Description	Control Value			Units	Description
			Min.	Default	Max.		
348	GP A03 STG B	General Purpose A02 Stage B	0	0	100	%	Analog output channel 3, stage B
349	GP A03 OUTPUT	General Purpose A03 Output	0	0	1	Selection	• 0 = PWM • 1 = 0-10 VDC
350	GP A03 PWM FREQ	General Purpose A03 Pulse-Width Modulation Frequency	50	200	2000	Hz	Frequency of execution of PID loop.
351	GP A03 KP	General Purpose A03 Proportional Constant	0	0	100	Count	Analog output channel 3 PID loop proportional constant.
352	GP A03 KI	General Purpose A03 Integral Constant	0	0	100	Count	Analog output channel 3 PID loop integral constant.
354	GP A03 MIN OUPUT	General Purpose A03 Minimum Output	0	0	100	%	Analog output channel 3 minimum output.
355	GP A03 MAX OUPUT	General Purpose A03 Maximum Output	0	100	100	%	Analog output channel 3 Maximum output.
356	GP A03 SOURCE	General Purpose A03 Source	1	1	3	SOURCE	Source/feedback for the PID loop. • 1 = Analog input 1 on GP3 A03 • 2 = Analog input 2 on GP3 A03 • 3 = Analog input 3 on GP3 A03
357	GP A03 CYCL INTRVL	General Purpose A03 Cycle Interval	0	1	180	Seconds	Frequency of execution of PID loop.

Table 59. CORE Control System Unit Parameters							
Control Parameter No	Screen Name	Parameter Short Description	Control Value			Units	Description
			Min.	Default	Max.		
358	GP D01 MODE	General Purpose D01 Mode	0	0	127	Input Source	GP3 Digital Out Control Mode = X + 32*Y + 16*Z **Input Sources X:** • 0 = None. • 1 = Compressor 1 duty cycle. (Compressor crankcase heater function) > On when outdoor air temperature is > = Parameter 364 seconds have passed with compressor 1 off. > Off when outdoor air temperature > Parameter 362 + 3°F (fixed dead-band) or compressor 1 is turned on. • 2 = On when Occupied • 3 = On when blower on. • 4 = On when heating demand • 5 = On when cooling demand • 6 = On when heating or cooling demand • 7 = System RH (use Parameter 361) • 8 = System IAQ (use Parameter 360) • 9 = System OAT (use Parameter 362) • 10 = On based on GP3 Temperature Sensor 1 (use Parameter 362) • 11 = On based on GP3 Temperature Sensor 2 (use Parameter 362) • 12 = On based on GP3 AI1 (use Parameter 359) • 13 = On based on GP3 AI2 (use Parameter 359) • 14 = On based on GP3 AO1 (use Parameter 359) • 15 = On based on GP3 AO2 (use Parameter 359) • Algorithm Y for Input Sources 7-15
359	GP D01 SP VOLTS	General Purpose D01 Set Points Volts	0	0	10	Volts	General Purpose D01 Digital output control mode set point.
360	GP D01 SP PPM	General Purpose D01 Set Point Parts Per Million	21	996	1996	PPM	General Purpose D01 Digital output control mode set point.
361	GP D01 SP PERCENT	General Purpose D01 Set Point Percentage	0	0	100	%	General Purpose D01 Digital output control mode set point.
362	GP DO1 SP DEGREES	General Purpose D01 Set Point Degree	-31	0	132	°F	General Purpose D01 Digital output control mode set point.
363	GP D01 DB PERCENT	General Purpose D01 Dead Band Percentage	0	0	100	%	General Purpose D01 Digital output control mode set point. ***EXAMPLE:*** *If this Parameter is set to 10%, then the dead-band in Fahrenheit would be (DO Temperature Set Point * 10 /100).*
364	GP D01 TIME DELAY	General Purpose D01 Time Delay	1	416	8160	Seconds	For delay on or delay off.

Table 59. CORE Control System Unit Parameters							
Control Parameter No	Screen Name	Parameter Short Description	Control Value			Units	Description
			Min.	Default	Max.		
365	GP D02 MODE	General Purpose D02 Mode	0	0	127	Mode Selection	GP3 Digital Out Control Mode = X + 32*Y + 16*Z **Input Sources X:** • 0 = None. • 1 = Compressor 1 duty cycle. (Compressor crankcase heater function) > On when outdoor air temperature is < = Parameter 369 and > = P 371 seconds have passed with compressor 1 off. > Off when outdoor air temperature > Parameter 369 + 3°F (fixed dead-band) or compressor 1 is turned on. • 2 = On when Occupied • 3 = On when blower on. • 4 = On when heating demand • 5 = On when cooling demand • 6 = On when heating or cooling demand • 7 = System RH (use Parameter 368) • 8 = System IAQ (use Parameter 367) • 9 = System OAT (use Parameter 369) • 10 = On based on GP3 Temperature Sensor 1 (use Parameter 369) • 11 = On based on GP3 Temperature Sensor 2 (use Parameter 369) • 12 = On based on GP3 AI1 (use Parameter 366) • 13 = On based on GP3 AI2 (use Parameter 366) • 14 = On based on GP3 AO1 (use Parameter 366) • 15 = On based on GP3 AO2 (use Parameter 366) • Algorithm Y for Input Sources 7-15
366	GP D02 SP VOLTS	General Purpose D02 Set Point Volts	0	0	10	Volts	General Purpose D02 Digital output control mode set point.
367	GP D02 SP PPM	General Purpose D02 Set Point Parts Per Million	21	996	1996	PPM	General Purpose D02 Digital output control mode set point.
368	GP D02 SP PERCENT	General Purpose D02 Set Point Percentage	0	0	100	%	General Purpose D02 Digital output control mode set point.
369	GP D02 SP DEGREES	General Purpose D02 Set Point Degree	-31	0	132	°F	General Purpose D02 Digital output control mode set point.
370	GP D02 DB PERCENT	General Purpose D02 Dead Band Percentage	0	0	100	%	General Purpose D02 Digital output control mode set point.
371	GP2 DO2 TIME DELAY	General Purpose D02 Time Delay	1	416	8160	Seconds	General Purpose D02 Digital output control mode set point.
375	DISCHARGE AIR CL SP	Discharge Air Cooling Set Point	45	55	65	°F	Set point used by the compressor / DAT PI in room sensor mode to determine the compressor speed.

Table 59. CORE Control System Unit Parameters							
Control Parameter No	Screen Name	Parameter Short Description	Control Value			Units	Description
			Min.	Default	Max.		
382	BLOWER LO HT OUTPUT	Blower Low Heat Output	20	Depends on equipment	100	%	Applicable to High Efficiency 3- to 5-ton units only. ·Blower staged percentage output low speed; used for low heating for certain P volt models
385	BACNET & CS COEXIST	This will allow the CS8500 to act as a slave to the CORE Unit Controller and connect via BACNET.	0	0	1	Option	• 0 = Disabled (default) (Required setting for connection with ICON system. • 1 = Enabled (BACNET & CS8500 can co-exist.
386	VAV SMK PRESS SP	VAV supply static pressure set point during smoke operation	0	1	5	in w.c.	
387	VAV VT PRESS SP	VAV supply static pressure set point during ventilation	0	1	5	in w.c.	
388	VAV HT PRESS SP	VAV supply static pressure set point during heating	0	1	5	in w.c.	
389	VAV CL PRESS SP	VAV supply static pressure set point during cooling	0	1	5	in w.c.	
390	VAV MAX OUTPUT	VAV PID loop max speed	40	100	100	%	
391	VAV MANUALRESET	VAV PID loop manual reset value.	0	60	100	%	
392	MGV STARTUP DELAY	"MGV start up delay is based on the setting. For example the default startup delay is 16 seconds after moving to high fire."	4	16	300	Seconds	
393	MGV MAX	MGV PID loop min speed	60	80	100	%	
394	MGV MIN	MGV PID loop max speed	0	20	100	%	
395	MGV PID MANUAL RST	MGV PID loop manual reset value.	0	50	100	%	
396	MGV PID P CONST	MGV PID loop proportional constant	0	40	127	Counts	
397	MGV PID I CONST	MGV PID loop integral constant	0	64	127	Counts	
398	MGV PID D CONST	MGV PID loop derivative constant	0	0	127	Counts	
399	MGV SP HI CAB	Shift to high speed CAB when MGV output rises above this value.	0	65	100	%	
400	MGV DB HI CAB	Deadband for shifting down to low speed CAB	2	17	100	%	

Table 59. CORE Control System Unit Parameters							
Control Parameter No	Screen Name	Parameter Short Description	Control Value			Units	Description
			Min.	Default	Max.		
401	POWER EXHAUST MODE	Power Exhaust Mode	N/A	Blower On	N/A	Options	Exhaust Fan Enable Options: • Blower On • Always • Occupied • External Enable
402	EXH FN LOW SPD CYCL	Low Speed Cycling.		0	1	Options	• 0 = Disabled • 1 - Enables Low Speed Cycling.
403	EXH FN STG1 SPEED	Speed for stage 1 when using a VFD for controlling exhaust fan in staged mode.	0	50	100	%	
404	EXH FN STG2 SPEED	Speed for stage 2 when using a VFD for controlling exhaust fan in staged mode.	0	100	100	%	
405	EXH FN SMK PRES SP	Exhaust Fan set point for PID control	-0.50	-0.50	0.50	in w.c.	
406	EXH FN MIN SPEED	Exhaust Fan PID loop min speed	0	50	100	%	
407	EXH FN MAX SPEED	Exhaust Fan PID loop max speed	0	100	100	%	
408	EXH FN MANUAL RESET	Exhaust Fan PID loop manual reset value.	0	100	100	%	
409	EXH FN P CONTSTANT	Exhaust Fan PID loop proportional constant	0	20	127	Counts	
410	EXH FN I CONSTANT	Exhaust Fan PID loop integral constant	0	64	127	Counts	
411	EXG FN D CONSTANT	Exhaust Fan PID loop derivative constant	0	0	127	Counts	
412	EN FIXED BLWR SPD	Enable Fixed Blower Speed	0	0	2	Options	This Parameter is applicable to ‘T’ type Blower only. • 0 - Auto • 1 - Always run the blower at low speed • 2 - Always run the blower at high speed
414	HI CL REHEAT TMOUT	High Cool Reheat Time Out	0	0	30	Sec	Reheat run-time on call for high cooling.
415	DAMP BKLASH ADJ	Damper Backlash Adjustment	0	25	40	%	Damper overshoot percentage when moving to a more closed position. The damper will move this percentage beyond the target position, then reverse and move to the final target position.
416	BLOWER COOL OUTPUT	Blower Cooling High	20	Depends on equipment	100	%	Applicable to High Efficiency 3- to 5-ton units only. Blower staged percentage output high speed; used for high cooling or ventilation,

33. CORE Control System Inputs and Outputs

33.1. CORE Unit Controller (A55) Input/Outputs

Table 60. J304 (S-Bus)

P304	LABEL	SIGNAL DESCRIPTION	SIGNAL TYPE
-	B	RS485, B(-) inverting	0-5VDC
S	G	Ground, Current Limiting	GND
+	A	RS485, A(+) non-inverting	0-5VDC

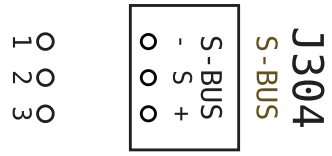

Table 61. J299 (Digital Input)

P299	LABEL	SIGNAL DESCRIPTION	SIGNAL TYPE
DI1	A173-SMOKE	Smoke Sensor	SW 24VAC IN
R	T1	Smoke 24VAC Power	24VAC OUT
C	GND	Ground	GND
DI2	DI2	Digital Input 2	SW 24VAC IN
R	T1	24VAC Power	24VAC OUT
DI3	DI3	Digital Input 3	SW 24VAC IN
R	T1	24VAC Power	24VAC OUT
DI4	HUMD_ST	Humidistat	SW 24VAC IN
C	COM	Ground	GND
		Not Used	

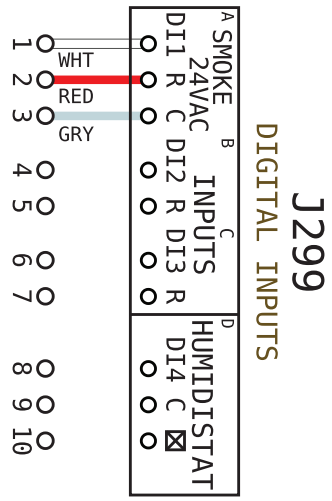

Table 62. J297 (TSTAT Inputs and Service Relays)

P297	LABEL	SIGNAL DESCRIPTION	SIGNAL TYPE
R	T1	24VAC Power	24VAC OUT
C	COM	Ground, T1	GND
G	G	G TSTAT Input	SW 24VAC IN
W1	W1	W1 Tstat Input	SW 24VAC IN
W2	W2	W2 Tstat Input	SW 24VAC IN
Y1	Y1	Y1 Tstat Input	SW 24VAC IN
Y2	Y2	Y2 Tstat Input	SW 24VAC IN
OCP	OCP	Occupancy Sensor	SW 24VAC IN
GLO	GLO	Global Input	SW 24VAC IN
DO1	DO1	Service Relay	24VAC OUT

Table 63. J298 (Analog Sensors)

P298	LABEL	SIGNAL DESCRIPTION	SIGNAL TYPE
R	T1	24 VAC Power	24VAC OUT
C	GND	Ground	GND
AI1	A63-IAQ	ID Air Quality Sens	0-10VDC IN
GND	GND	Digital Ground	GND
HUM	A91-RH_SENS	Humidity Sensor	0-10VDC IN
GND	GND	Ground	GND
TMP	A2-ROOM_SENS	Room/Zone Temp Sens	THERM 3.3VDC
AI2	SPARE_AIN	Not Used	0-10VDC IN
C	GND	Digital Ground	GND
R	T1	24VAC Power	24VAC OUT

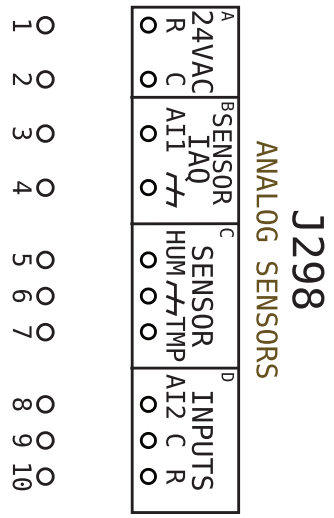

Table 64. J378 (Duct Sensors)

P378	LABEL	SIGNAL DESCRIPTION	SIGNAL TYPE
3	GND	Ground	GND
2	T1	24VAC Power	24VAC Power
1	A30	Static Duct Press Sensor	0-10VDC IN

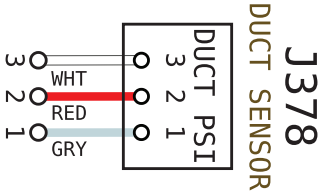

Table 65. J379 (Ultra Condenser)

P379 CAV#	LABEL	SIGNAL DESCRIPTION	SIGNAL TYPE
1	RT44	Comp 1 Liquid Temp Sens	THERM 3.3VDC
3	GND	Ground, RT44	GND
2	RT45	Comp 2 Liquid Temp Sens	THERM 3.3VDC
4	GND	Ground, RT45	GND

Table 66. J380 (Smart Air)

P380 CAV#	LABEL	SIGNAL DESCRIPTION	SIGNAL TYPE
1	5VDC	5VDC Supply	5VDC OUT
2		Damper Pressure Sensor	0-5VDC IN
3	GND	Ground, Damper PSI	GND

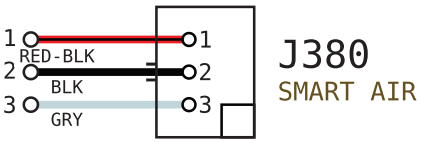

Table 67. J381 (Indoor Blower and Outdoor Fan Variable Speed)

P381 CAV#	LABEL	SIGNAL DESCRIPTION	SIGNAL TYPE
1	IDB	ID Blower ECM PWM1	PWM OUT 0-15V
6	GND	Ground, IDB	GND
2	IDB_RPM	ID Blower RPM Feedback	PWM IN 0-5V
7	GND	Ground, IDB_RPM	GND
3	BLWR_VO	VFD Blower Volt Out 0-10V	0-10VDC OUT
8	GND	Ground, BLWR_VO	GND
4	ODF1	Outdoor Fan PWM2	PWM OUT 0-18V
9	GND	Ground, ODF1	GND
5	ODF2	Outdoor Fan PWM3	PWM OUT 0-18V
10	GND	Ground, ODF2	GND

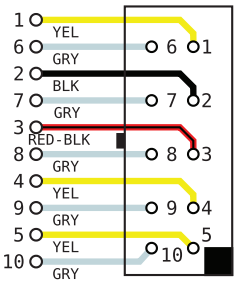

J381
ID BLOWER & OD FAN VAR SPD

Table 68. J382 (All Evaporators)

P382 CAV#	LABEL	SIGNAL DESCRIPTION	SIGNAL TYPE
1	RT6-DAT	Discharge Air Temp Sensor	THERM 3.3VDC
4	GND	Ground, DAT RT6	GND
2	RT46	Comp 1 Sat Suct Temp Sensor	THERM 3.3VDC
5	GND	Ground, RT46	GND
3	RT47	Comp 2 Sat Suct Temp Sensor	THERM 3.3VDC
6	GND	Ground, RT47	GND

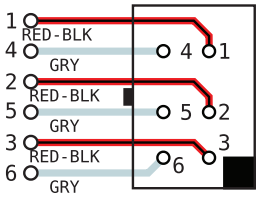

J382
ALL EVAPORATOR

Table 69. J383 (Ultra Evaporators)

P383 CAV#	LABEL	SIGNAL DESCRIPTION	SIGNAL TYPE
1	RT42	Comp 1 Suct Temp Sensor	THERM 3.3VDC
3	GND	Ground, RT42	GND
2	RT43	Comp 2 Suct Temp Sensor	THERM 3.3VDC
4	GND	Ground, RT43	GND

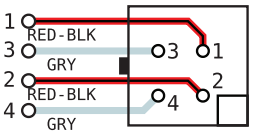

J383
ULTRA EVAPORATOR

Table 70. J384 (Economizer)

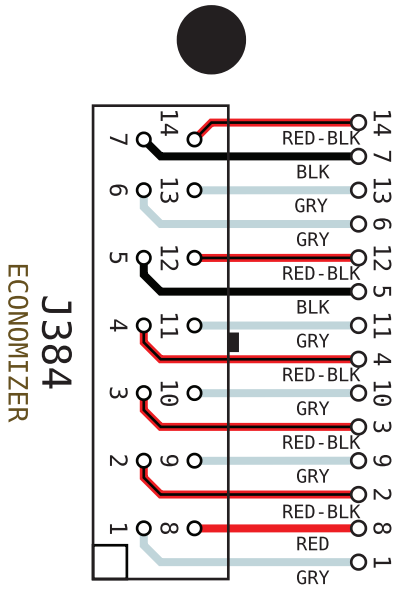

P384 CAV#	LABEL	SIGNAL DESCRIPTION	SIGNAL TYPE
14	18V	18VDC ID Enthalpy	18VDC
7	A62	ID Enthalpy Sensor	4-20mA IN
13	GND	Ground	GND
6	GND	Ground	GND
12	18V	18VDC OD Enthalpy	18VDC
5	A7	OD Enthalpy Sensor	4-20mA IN
11	GND	Ground, RAT	GND
4	RT16-RAT	RA Temp Sensor	THERM 3.3VDC
10	GND	Ground, DPOS	GND
3	DPOS	Econo, Act Pos Feedback	0-10VDC IN
9	GND	Ground, VOT	GND
2	VOT	Econo, Act Position	0-10VDC OUT
8	T1	24 VAC Power	24VAC OUT
1	GND	Ground	GND

Table 71. J385 (All Condensers)

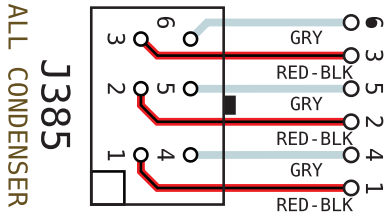

P385 CAV#	LABEL	SIGNAL DESCRIPTION	SIGNAL TYPE
6	GND	Ground, RT49	GND
3	RT49	Comp 2 Sat Liq Temp Sens	THERM 3.3VDC
5	GND	Ground, RT48	GND
2	RT48	Comp 1 Sat Liq Temp Sens	THERM 3.3VDC
4	GND	Ground, RT17	GND
1	RT17	OD Air Temp Sensor	THERM 3.3VDC

Table 72. J386 (Refrigerant Loss Detection)

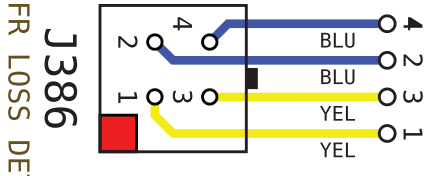

P386 CAV#	LABEL	SIGNAL DESCRIPTION	SIGNAL TYPE
4			
2			
3			
1			

Table 73. J387 (Options)

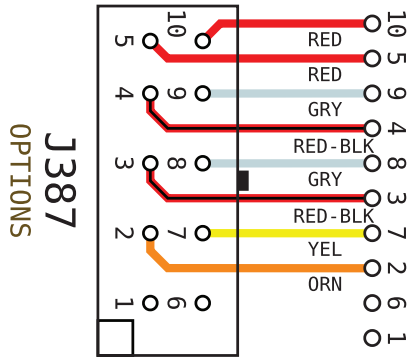

P387 CAV#	LABEL	SIGNAL DESCRIPTION	SIGNAL TYPE
10	T1	24 VAC Pwr, Overfl Sw	24VAC OUT
5	OVERFLOW	Overflow Switch	SW 24VAC
9	GND	Ground, Dirty Fltr Sw	GND
4	S27	Dirty Filter Switch	SW 5VDC
8	GND	Ground, Air Flow Sw	GND
3	S52	Air Flow Switch	SW 5VDC
7	GND	Ground, Ionizer BAS	GND
2	ION	Ionizer BAS	5VDC
6	GND	Ground, SPARE_1	GND
1	SPARE_1	Spare1	SW 5VDC

Table 74. J388 (Pressure Switches)

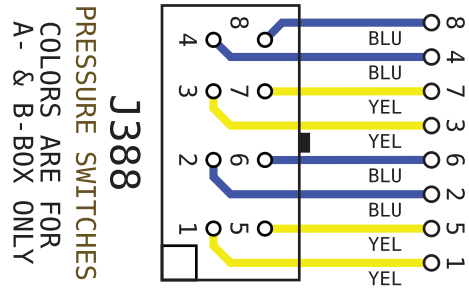

P388 CAV#	LABEL	SIGNAL DESCRIPTION	SW 24VAC
8	T1	24 VAC Power, LPSW2	24VAC OUT
4	S88-LPSW2	Low Press Sw Comp 2	SW 24VAC
7	T1	24 VAC Power, LPSW1	24VAC OUT
3	S87-LPSW1	Low Pres Sw Comp 1	SW 24VAC
6	T1	24 VAC Power, HPSW2	24VAC OUT
2	S7-HPSW2	High Press Sw Comp 2	SW 24VAC
5	T1	24 VAC Power, HPSW1	24VAC OUT
1	S4-HPSW1	High Press Sw Comp 1	SW 24VAC

Table 75. J389 (Compressors 1 and 2)

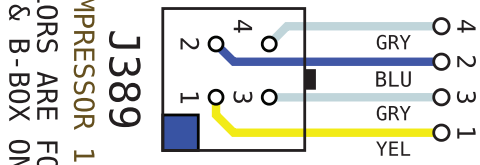

P389 CAV#	LABEL	SIGNAL DESCRIPTION	SIGNAL TYPE
4	GND	Ground, COMP2	GND
2	COMP2	Compressor 2	24VAC OUT
3	GND	Ground, COMP1	GND
1	COMP1	Compressor 1	24VAC OUT

Table 76. J390 (Relays)

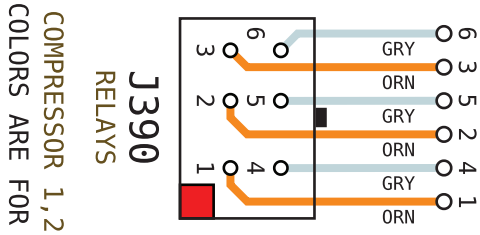

P390 CAV#	LABEL	SIGNAL DESCRIPTION	SIGNAL TYPE
6	GND	Ground, K65	GND
3	K65	Power Exhaust Stage 1	24VAC OUT
5	GND	Ground, K68	GND
2	K68	Outdoor Fan 2	24VAC OUT
4	GND	Ground, K10	GND
1	K10	Outdoor Fan 1	24VAC OUT

Table 77. J391 (Compressor 2-Stage)

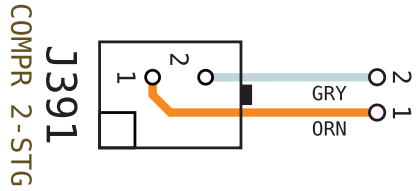

P391 CAV#	LABEL	SIGNAL DESCRIPTION	SIGNAL TYPE
2	GND	Ground, L34	GND
1	L34	Comp 1 stage 2 solenoid	24VAC OUT

Table 78. J392 (Blower)

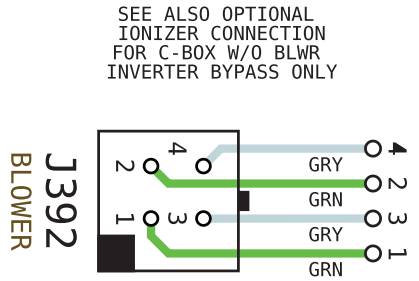

P392 CAV#	LABEL	SIGNAL DESCRIPTION	SIGNAL TYPE
4	GND	Ground, VFD Bypass	GND
2	BYPS	VFD Bypass	24VAC OUT
3	GND	Ground, Blower	GND
1	BLWR	Blower	24VAC OUT

Table 79. J393 (Gas Heat)

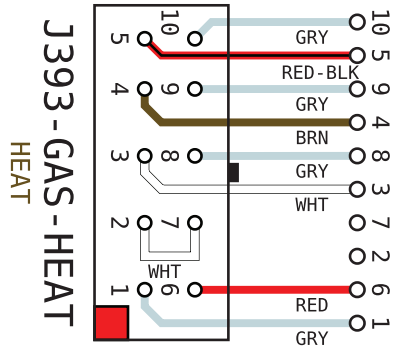

P393 CAV#	LABEL	SIGNAL DESCRIPTION	SIGNAL TYPE
10	GND	Ground, MGV	GND
5	MGV	Modul Gas Valve 0-10V	0-10VDC OUT
9	GND	Ground, HEAT2	GND
4	HEAT2-K16	Heat 2, Elec Heat 2	24VAC OUT
8	GND	Ground, HEAT1	GND
3	HEAT1-K15	Heat 1, Elec Heat 1	24VAC OUT
7	EH_LIMIT	Elec Ht Limit Sw Return	SW 24VAC OUT
2	EH_LIMIT	Elec Ht Limit Sw	24VAC OUT
6	T18	24 VAC Power	24VAC OUT
1	GND	Ground	GND

Table 80. J393 (Electric Heat)

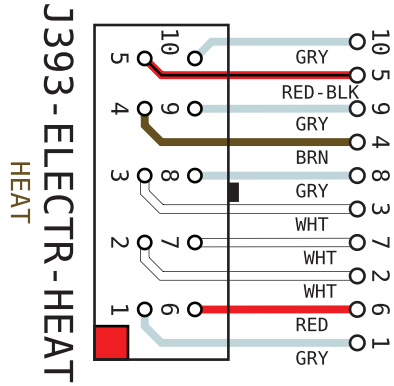

P393 CAV#	LABEL	SIGNAL DESCRIPTION	SIGNAL TYPE
10	GND	Ground, MGV	GND
5	MGV	Modul Gas Valve 0-10V	0-10VDC OUT
9	GND	Ground, HEAT2	GND
4	HEAT2-K16	Heat 2, Elec Heat 2	24VAC OUT
8	GND	Ground, HEAT1	GND
3	HEAT1-K15	Heat 1, Elec Heat 1	24VAC OUT
7	EH_LIMIT	Elec Ht Limit Sw Return	SW 24VAC OUT
2	EH_LIMIT	Elec Ht Limit Sw	24VAC OUT
6	T18	24 VAC Power	24VAC OUT
1	GND	Ground	GND

Table 81. J394 (ReHeat)

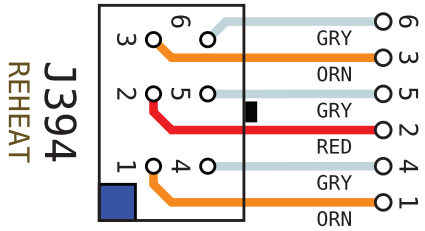

P394 CAV#	LABEL	SIGNAL DESCRIPTION	SIGNAL TYPE
6	GND	Ground, REHEAT2	GND
3	L30	Humiditrol (Reheat) 2	24VAC OUT
5	GND	Ground, T43	GND
2	T43	24 VAC Power	24VAC IN
4	GND	Ground, REHEAT1	GND
1	L14	Humiditrol (Reheat) 1	24VAC OUT

Table 82. J388 (C Box)

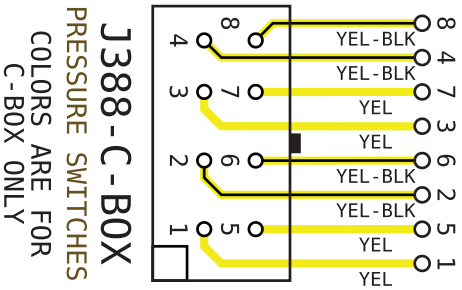

P388 CAV#	LABEL	SIGNAL DESCRIPTION	SW 24VAC
8	T1	24 VAC Power, LPSW2	24VAC OUT
4	S88-LPSW2	Low Press Sw Comp 2	SW 24VAC
7	T1	24 VAC Power, LPSW1	24VAC OUT
3	S87-LPSW1	Low Pres Sw Comp 1	SW 24VAC
6	T1	24 VAC Power, HPSW2	24VAC OUT
2	S7-HPSW2	High Press Sw Comp 2	SW 24VAC
5	T1	24 VAC Power, HPSW1	24VAC OUT
1	S4-HPSW1	High Press Sw Comp 1	SW 24VAC

Table 83. J389 (C Box)

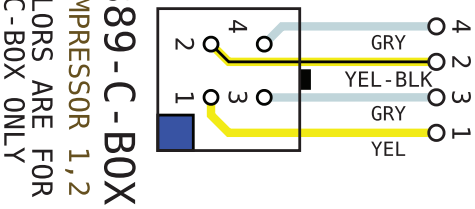

P389 CAV#	LABEL	SIGNAL DESCRIPTION	SIGNAL TYPE
4	GND	Ground, COMP2	GND
2	COMP2	Compressor 2	24VAC OUT
3	GND	Ground, COMP1	GND
1	COMP1	Compressor 1	24VAC OUT

Table 84. J395 (Power In)

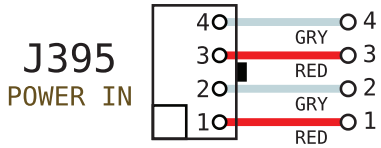

P395 CAV#	LABEL	SIGNAL DESCRIPTION	SIGNAL TYPE
4	GND	Transformer T18, 24VAC return	GND
3	T18	Transformer T18, 24VAC	24VAC IN
2	GND	Transformer T1, 24VAC return	GND
1	T1	Transformer T1, 24VAC	24VAC IN

Table 85. J358 (MODUS Vs COMPR)

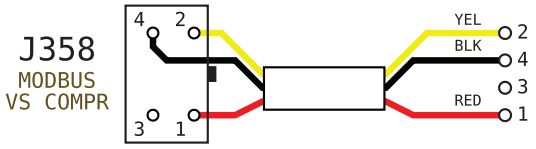

P395 CAV#	LABEL	SIGNAL DESCRIPTION	SIGNAL TYPE
2	B	RS485, B (-) inverting	0-5VDC
4	G	Ground, Current limited	GND
3		Not Used	
1	A	RS485, A (+) non-inverting	0-5VDC

Table 86. J413 (Modbus)

P413	LABEL	SIGNAL DESCRIPTION	SIGNAL TYPE
1	A	RS485, A(+) non-inverting	0-5VDC
2	G	Ground, Current Limiting	DRAINWIRE
3	B	RS485, B(-) inverting	0-5VDC

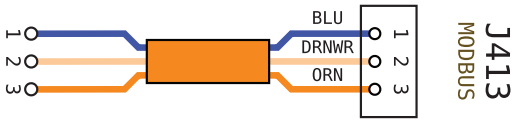

33.2. C4 Control (A178)

Table 87. P396 (Electric Heat)

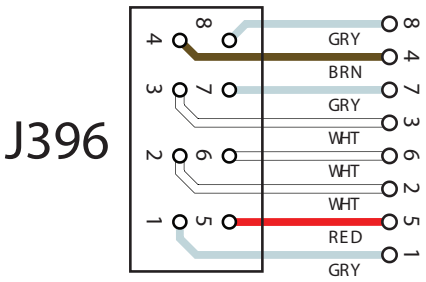

P396 CAV#	LABEL	DESCRIPTION	TYPE
8	GND	Ground, HEAT4	GND
4	HEAT4	Heat 4	24VAC OUT
7	GND	Ground, HEAT3	GND
3	HEAT3	Heat 3	24VAC OUT
6	EH_LIMIT	Elec Ht Limit Sw Rtrn	SW 24VAC
2	EH_LIMIT	Elec Ht Limit Sw	24VAC OUT
5	24VAC_EXT	24 VAC Power	24VAC OUT
1	GND	Ground, 24VAC_EXT	GND

Table 88. P396 (Gas Heat)

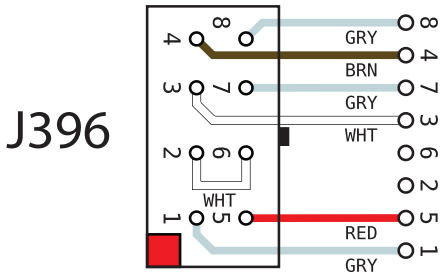

P396 CAV#	LABEL	DESCRIPTION	TYPE
8	GND	Ground, HEAT4	GND
4	HEAT4	Heat 4	24VAC OUT
7	GND	Ground, HEAT3	GND
3	HEAT3	Heat 3	24VAC OUT
6	EH_LIMIT	Elec Ht Limit Sw Rtrn	SW 24VAC
2	EH_LIMIT	Elec Ht Limit Sw	24VAC OUT
5	24VAC_EXT	24 VAC Power	24VAC OUT
1	GND	Ground, 24VAC_EXT	GND

Table 89. P397 (Compressor Fans)

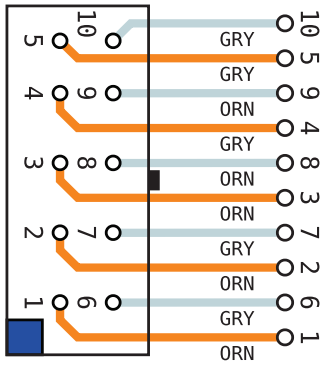

P397 CAV#	LABEL	DESCRIPTION	TYPE
10	GND	Ground, PE2	GND
5	PE2	Power Exhaust Stg 2	24VAC OUT
9	GND	Ground, ODF6	GND
4	ODF6	Outdoor Fan 6	24VAC OUT
8	GND	Ground, ODF5	GND
3	ODF5	Outdoor Fan 5	24VAC OUT
7	GND	Ground, ODF4	GND
2	ODF4	Outdoor Fan 4	24VAC OUT
6	GND	Ground, ODF3	GND
1	ODF3	Outdoor Fan 3	24VAC OUT

Table 90. P398 (Compressors 3 and 4)

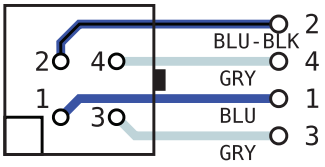

P398 CAV#	LABEL	DESCRIPTION	TYPE
2	COMPR4	Compressor 4	24VAC OUT
4	GND	Ground, COMPR4	GND
1	COMPR3	Compressor 3	24VAC OUT
3	GND	Ground, COMPR3	GND

Table 91. P399 (Pressure Switches 3 and 4)

J399

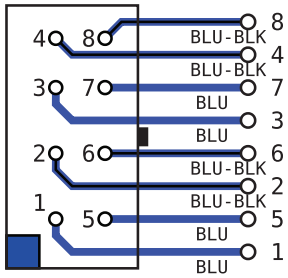

P399 CAV#	LABEL	DESCRIPTION	TYPE
8	24VAC_EXT	24 VAC Power, HPSW4	24VAC OUT
4	S96-HPSW4	High Press Sw Comp 4	SW 24VAC
7	24VAC_EXT	24 VAC Power, HPSW3	24VAC OUT
3	S28-HPSW3	High Press Sw Comp 3	SW 24VAC
6	24VAC_EXT	24 VAC Power, LPSW4	24VAC OUT
2	S97-LPSW4	Low Press Sw Comp 4	SW 24VAC
5	24VAC_EXT	24 VAC Power, LPSW3	24VAC OUT
1	S98-LPSW3	Low Press Sw Comp 3	SW 24VAC

Table 92. P400 (24VAC)

J400

P400 CAV#	LABEL	DESCRIPTION	TYPE
1	24VAC_IN	External 24VAC Power	24VAC IN
2	GND	Ground, 24VAC Power Return	GND

Table 93. P401 (All Evaporators)

J401

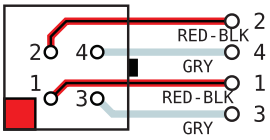

P401 CAV#	LABEL	DESCRIPTION	TYPE
2	RT51	Comp 4 Sat Suct Temp Sensor	THERM 3.3VDC
4	GND	Ground, RT51	GND
1	RT50	Comp 3 Sat Suct Temp Sensor	THERM 3.3VDC
3	GND	Ground, RT50	GND

Table 94. P402 (Ultra Evaporators)

J402

P402 CAV#	LABEL	DESCRIPTION	TYPE
4	GND	Ground, RT55	GND
3	RT55	Comp 4 Suct Temp Sensor	THERM 3.3VDC
2	GND	Ground, RT54	GND
1	RT54	Comp 3 Suct Temp Sensor	THERM 3.3VDC

Table 95. P403 (Options)

J403

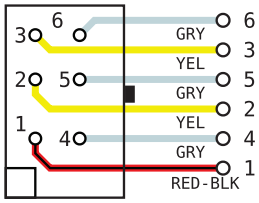

P403 CAV#	LABEL	DESCRIPTION	TYPE
6	GND	Ground, ODF3	GND
3	ODF3	Outdoor Fan PWM4	PWM OUT 0-18V
5	GND	Ground, ODF4	GND
2	ODF4	Outdoor Fan PWM5	PWM OUT 0-18V
4	GND	Ground, PE_VFD	Ground, PE_VFD
1	PE_VFD	Power Exhaust VFD Control	0-10VDC OUT

Table 96. P404 (All Condensors)

J404

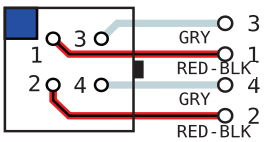

P404 CAV#	LABEL	DESCRIPTION	TYPE
3	GND	Ground, RT52	GND
1	RT52	Comp 3 Sat Liq Temp Sens	THERM 3.3VDC
4	GND	Ground, RT53	GND
2	RT53	Comp 4 Sat Liq Temp Sens	THERM 3.3VDC

Table 97. P404 (Ultra Condensers)

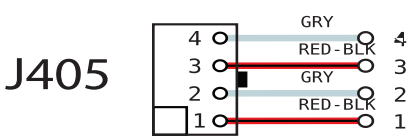

P405 CAV#	LABEL	DESCRIPTION	TYPE
1	RT56	Comp 3 Liq Temp Sens	THERM 3.3VDC
2	GND	Ground, RT56	GND
3	RT57	Comp 4 Liq Temp Sens	THERM 3.3VDC
4	GND	Ground, RT57	GND

Table 98. P396 (Electric Heat)

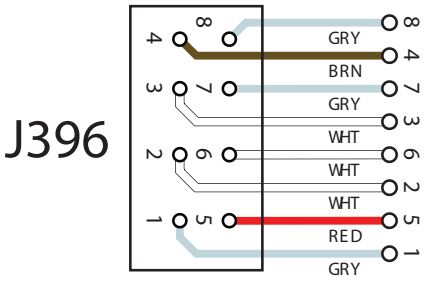

P396 CAV#	LABEL	DESCRIPTION	TYPE
8	GND	Ground, HEAT4	GND
4	HEAT4	Heat 4	24VAC OUT
7	GND	Ground, HEAT3	GND
3	HEAT3	Heat 3	24VAC OUT
6	EH_LIMIT	Elec Ht Limit Sw Rtrn	SW 24VAC
2	EH_LIMIT	Elec Ht Limit Sw	24VAC OUT
5	24VAC_EXT	24 VAC Power	24VAC OUT
1	GND	Ground, 24VAC_EXT	GND

Table 99. C4 Control Jacks and Plug Part Numbers

TE VAL-U-LOK
BOARD HEADERS & CONNECTING PLUG HOUSINGS

# CIRCUITS	BOARD HEADER DESIGNATION	BOARD HEADER OEM PART # (TE)	CONNECTING PLUG DESIGNATION	LENNOX PART #	CONNECTING PLUG OEM PART # (TE)	COLOR
8	J396	2029138-8	P396	106509-04	2029094-8	RED
10	J397	1-2029142-0	P397	106510-05	1-2029100-0	BLUE
4	J398	1586040-4	P398	106507-02	1969614-4	WHITE
8	J399	2029142-8	P399	106510-04	2029100-8	BLUE
2	J400	2029134-2	P400	106508-01	2029029-2	BLACK
4	J401	2029138-4	P401	106509-02	2029094-4	RED
4	J402	TBD	P402	106504-03	2029208-4	BLACK
6	J403	1586040-6	P403	106507-03	1969614-6	WHITE
4	J404	2029142-4	P404	106510-02	2029100-4	BLUE
4	J405	2029056-4	P405	106504-02	1586027-4	WHITE

TE VAL-U-LOK TERMINAL PART # 794956-1 (Strip Form), Brass/Pre-Tin, 18-22AWG - Lennox Part # 106505-01

33.3. DSI Board (A3)

Table 100. J406 (A3) (M4 Control))

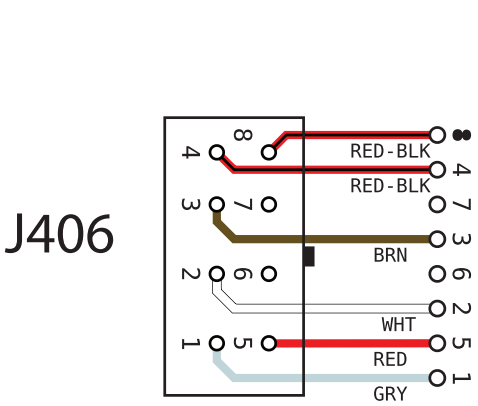

P406 CAV#	LABEL	DESCRIPTION
8	MGV2	Modulating Gas Valve feedback
4	MGV1	0-10VDC Modulating Gas Valve
7		
3	W2	24VAC DIGITAL ON/OFF
6		
2	W1	24VAC DIGITAL ON/OFF
5	R1	24VAC Supply
1	C	24VAC COM

Table 101. J406 (A12) (M4 Control)

A12

J406

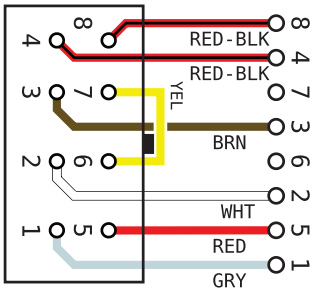

P406 CAV#	LABEL	DESCRIPTION
8	MGV2	Modulating Gas Valve feedback
4	MGV1	0-10VDC Modulating Gas Valve
7	D1	24VAC DIGITAL ON/OFF
3	W2	24VAC DIGITAL ON/OFF
6	R2	24 VAC Supply
2	W1	24VAC DIGITAL ON/OFF
5	R1	24VAC Supply
1	C	24VAC COM

Table 102. J374 (Versions 1 through 4)

J374-VER-1

1-SPD PSC CAI MOTOR

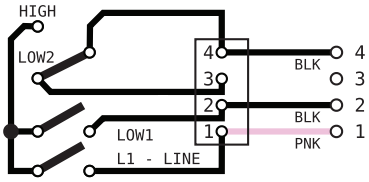

P374 CAV#	LABEL	DESCRIPTION
4	HIGH	208/230/460 VAC
3		
2	LOW 1	208/230/460 VAC
1	L1-LINE	208/230/460 VAC ALWAYS ON

1-SPEED PSC
104532

A-Box

J374-VER-2

1-SPD PSC CAI MOTOR

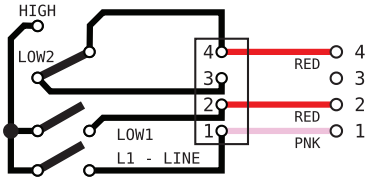

P374 CAV#	LABEL	DESCRIPTION
4	HIGH	208/230/460 VAC
3		
2	LOW 1	208/230/460 VAC
1	L1-LINE	208/230/460 VAC ALWAYS ON

1-SPEED PSC
104409

B-Box
C-Box
D-Box

J374-VER-3

3-SPD ECM CAI MOTOR

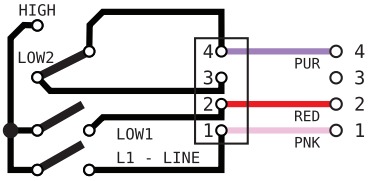

P374 CAV#	LABEL	DESCRIPTION
4	HIGH	208/230/460 VAC
3		
2	LOW 1	208/230/460 VAC
1	L1-LINE	208/230/460 VAC ALWAYS ON

3-SPEED ECM
105035

J374-VER-4

2-SPD PSC CAI MOTOR

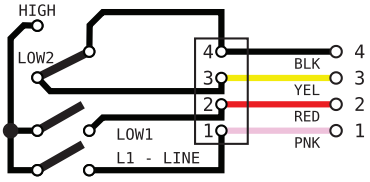

P374 CAV#	LABEL	DESCRIPTION
4	HIGH	208/230/460 VAC
3	LOW 2	208/230/460 VAC
2	LOW 1	208/230/460 VAC
1	L1-LINE	208/230/460 VAC ALWAYS ON

2-SPEED PSC
105223

Table 103. J10 (GV1) (S18)

J10
(S18)

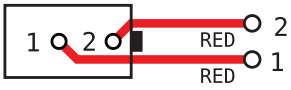

P410 CAV#	LABEL	DESCRIPTION
2	S18, S45 OUT	24VAC DIGITAL ON/OFF
1	S18, S45 IN	24VAC

Table 104. J408 (GV1) (S47)

J408

P408 CAV#	LABEL	DESCRIPTION
4	GV-M	24VAC, 3AMP INRUSH FOR 16mS
1	GV-C	24VAC, 3AMP INRUSH FOR 16mS
5	OPEN	OPEN
2	GV-H	24VAC, 3AMP INRUSH FOR 16mS
6	S47, S69	Flame Rollout, 24VAC DIGITAL ON/OFF
3	S47, S69	Flame Rollout, 24VAC DIGITAL ON/OFF

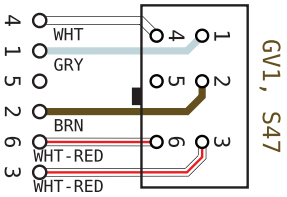

Table 105. J412 (MODUS 2)

P412 CAV#	LABEL	DESCRIPTION
3	B	0-5VDC MODBUS
2	G	DRAINWIRE
1	A	0-5VDC MODBUS

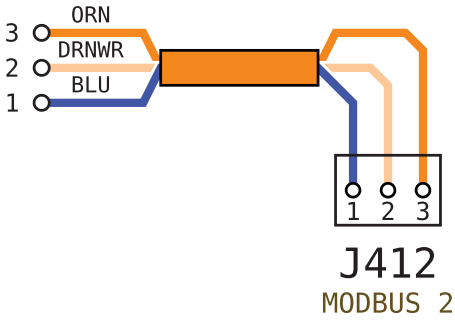

Table 106. J411 (MODUS 1)

P411 CAV#	LABEL	DESCRIPTION
3	B	0-5VDC MODBUS
2	G	DRAINWIRE
1	A	0-5VDC MODBUS

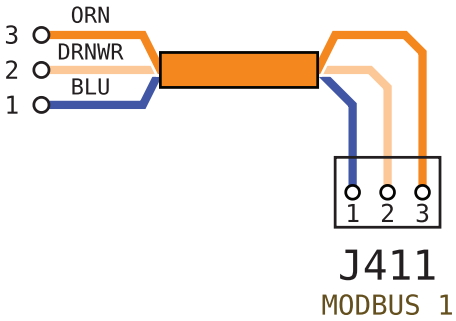

Table 107. J407 (S10 and S21)

P407 CAV#	LABEL	DESCRIPTION
1	S10, S99	24VAC
2	S10, S99	24VAC DIGITAL ON/OFF
3	S21, S100	24VAC DIGITAL ON/OFF
4	S21, S100	24VAC DIGITAL ON/OFF

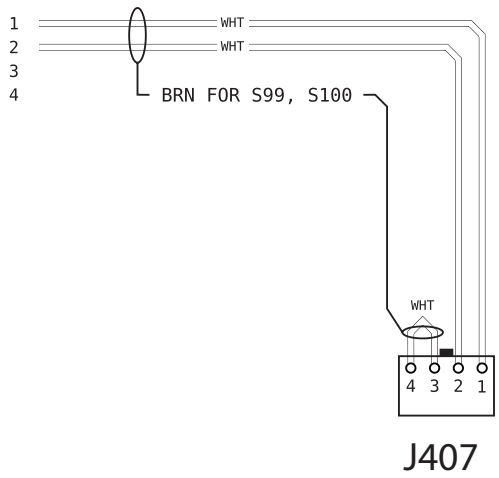

33.4. W4 Control

Table 108. W4 Control

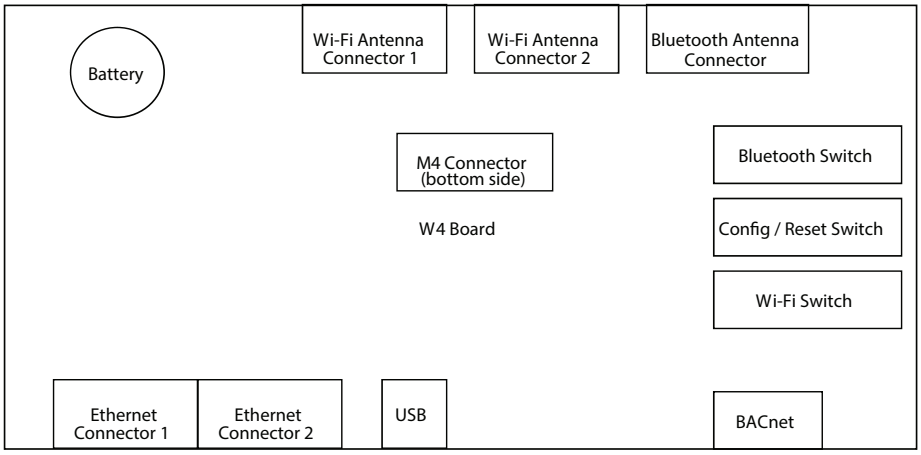

34. Wiring Diagram

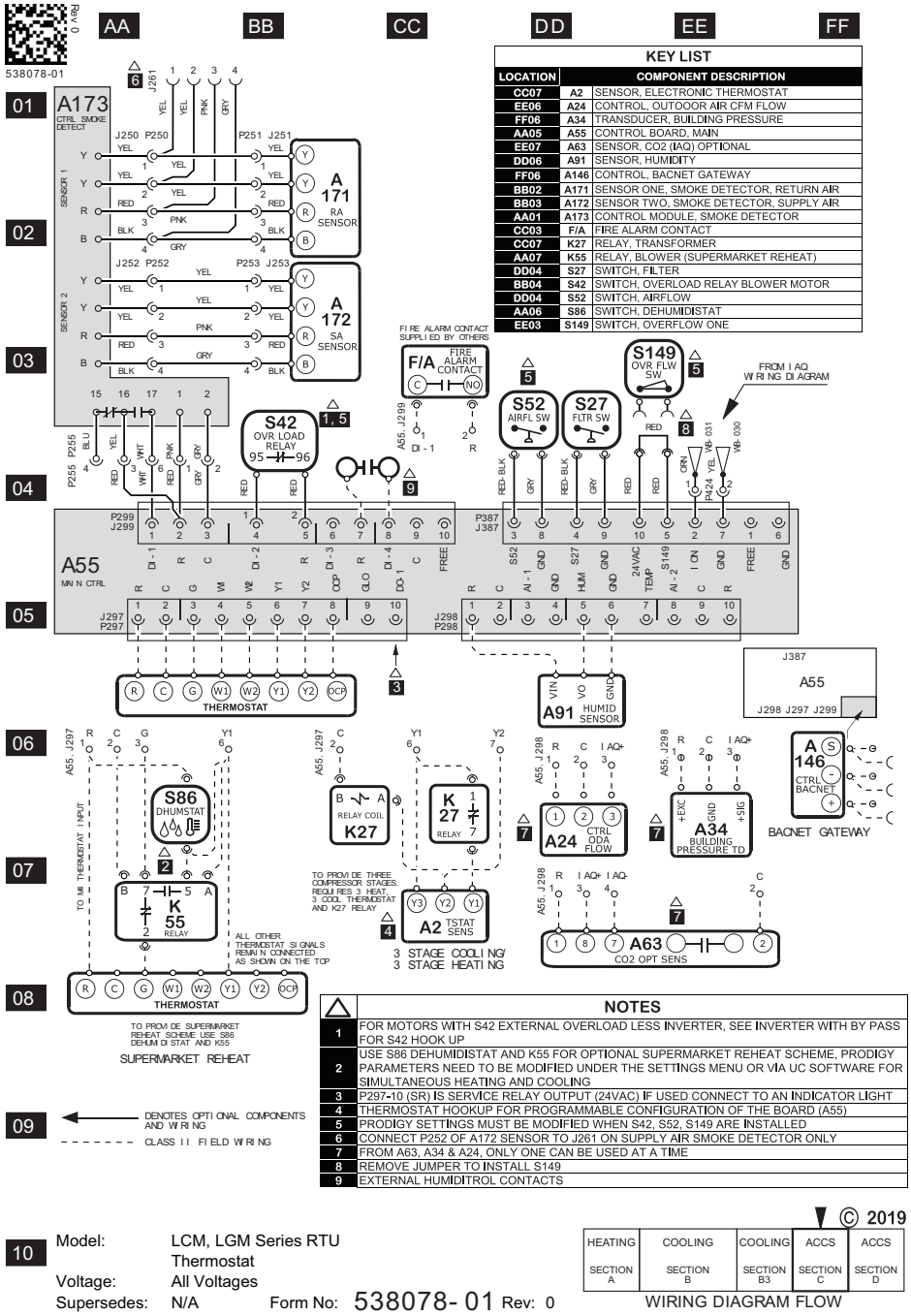

KEY LIST		
LOCATION	COMPONENT DESCRIPTION	
CC07	A2	SENSOR, ELECTRONIC THERMOSTAT
EE06	A24	CONTROL, OUTOOOR AIR CFM FLOW
FF06	A34	TRANSDUCER, BUILDING PRESSURE
AA05	A55	CONTROL BOARD, MAIN
EE07	A63	SENSOR, CO2 (IAQ) OPTIONAL
DD06	A91	SENSOR, HUMIDITY
FF06	A146	CONTROL, BACNET GATEWAY
BB02	A171	SENSOR ONE, SMOKE DETECTOR, RETURN AIR
BB03	A172	SENSOR TWO, SMOKE DETECTOR, SUPPLY AIR
AA01	A173	CONTROL MODULE, SMOKE DETECTOR
CC03	F/A	FIRE ALARM CONTACT
CC07	K27	RELAY, TRANSFORMER
AA07	K55	RELAY, BLOWER (SUPERMARKET REHEAT)
DD04	S27	SWITCH, FILTER
BB04	S42	SWITCH, OVERLOAD RELAY BLOWER MOTOR
DD04	S52	SWITCH, AIRFLOW
AA06	S86	SWITCH, DEHUMIDISTAT
EE03	S149	SWITCH, OVERFLOW ONE

NOTES	
1	FOR MOTORS WITH S42 EXTERNAL OVERLOAD LESS INVERTER, SEE INVERTER WITH BY PASS FOR S42 HOOK UP
2	USE S86 DEHUMIDISTAT AND K55 FOR OPTIONAL SUPERMARKET REHEAT SCHEME, PRODIGY PARAMETERS NEED TO BE MODIFIED UNDER THE SETTINGS MENU OR VIA UC SOFTWARE FOR SIMULTANEOUS HEATING AND COOLING
3	P297-10 (SR) IS SERVICE RELAY OUTPUT (24VAC) IF USED CONNECT TO AN INDICATOR LIGHT
4	THERMOSTAT HOOKUP FOR PROGRAMMABLE CONFIGURATION OF THE BOARD (A55)
5	PRODIGY SETTINGS MUST BE MODIFIED WHEN S42, S52, S149 ARE INSTALLED
6	CONNECT P252 OF A172 SENSOR TO J261 ON SUPPLY AIR SMOKE DETECTOR ONLY
7	FROM A63, A34 & A24, ONLY ONE CAN BE USED AT A TIME
8	REMOVE JUMPER TO INSTALL S149
9	EXTERNAL HUMIDITROL CONTACTS

10

Model: LCM, LGM Series RTU
Thermostat
Voltage: All Voltages
Supersedes: N/A Form No: 538078- 01 Rev: 0

© 2019

HEATING	COOLING	COOLING	ACCS	ACCS
SECTION A	SECTION B	SECTION B3	SECTION C	SECTION D

WIRING DIAGRAM FLOW

7x10 CUT SIZE

REV	EC NO.	DATE	BY	APVD	REVISION NOTE
---	CN-008594	10/15/2020	RV	MXR6	ORIGINATED AT PD&R CARROLLTON, TX

Figure 64. Wiring Diagram - Part 1

Index

A

Abbreviations 87

Add-on Controllers 4

Air Flow Proving Switch (S52 - Optional) 17

Alarms 89

B

Blower Off-Delay 18

Blower On-Delay 17

Blower Operation (Occupied) in Room Sensor Mode 13

Blower Overload Relay Switch (S42 - Optional) 17

Building Pressure Control (BPC) 46

C

Combustion Air Inducer (CAI) Proof Switches (S18 and S45) 15

Compressor Minimum Run-Time Off-Delay 14

Compressor On-Delay 14

Compressor Protection and Delays 14

Connections 6, 8

Control Type - Thermostat 9

Cool-Down Delay (During Occupied Time Period) 18

Cooling Stages 9

D

Dehumidification Operation

- Compressor and Humiditrol Operation 30
- Humiditrol Dehumidification Operation — (Humiditrol® Reheat) 28
- Outside Air For Dehumidification 29
- Selecting Minimum Low and Minimum High Damper Positions 29
- Supermarket Reheat Operation Settings 28
- Third Party Digital Input to Control Dehumidification 29

Demand Control Ventilation (DCV)

- Default Operation 43
- Determining Indoor Air Quality Inputs 44
- General 43
- Maximum and Minimum Demand Control Ventilation Damper Settings 43
- Parameter Adjustments 44
- Set Point Control Option 44

Dirty Filter Switch (S27- Optional) 17

Discharge Air Control 49

- Cooling 49
- Heating 51

E

Economizer 39

- Closing Damper and Calibration 41
- Damper Operation During Free Cooling 40
- Economizer Checkout 41
- Enabling Economizer and Settings 40
- Enthalpy Set Point 41
- Free Cooling Compressor Lockout Mode and Low Ambient Set Point 41
- Free Cooling Damper Maximum Position 41
- General 40
- Minimum Damper Position 41
- Outdoor Air Suitable for Free Cooling 41

Electric Heat Operation—Electric / Electric Units

- Electric Heat Stage Delay Operation 19

Events and Alarms 64

F

Freezestat (S49, S50, S53 and S95) 14

G

Gas and Electric Heat Warm-Up Mode (During Occupied Time Period) 18

Gas Heat Operation—Gas Units

- Heat Speeds 18

Gas Heat Valve Delays 16

Gas Units Burner Protection and Delays

- Flame Roll-Out Switches (S47 and S69) 15
- Primary or Secondary Limits (S10 and S99) 15

Gas Valve Sensor Activation Feedback 16

H

Heating and Cooling Stages in Room Sensor Mode 13

Heating Stages 10

High Pressure Switches (S4, S7, S28 and S96) 14

I

ICON Setting 125

Increased Dehumidification Operation 38

Inputs/Outputs 6

J

Jumpers 6

L

L Connection Network Back-Up Mode Requirements 12

LED Operation Indicators 7

LEDs 6

Loss of Power Detection (Single-Phase Units Only) 15

Low Pressure Switches (S87, S88, S97 and S98) 15

M

M3 Unit Controller

- Layout and Connections 5

Menu Selection Overview 65

MODBUS 7

N

Network Control Panel 12

O

Outdoor Air Control (OAC) 44

Outdoor Fan Operations

- Compressor / Fan Configurations 21
- High Ambient Conditions 20
- Low Ambient Conditions (S11, S84, S85 and S94) 20
- Normal Ambient Conditions 20

Overflow Switches (S149 / S179 - Optional) 17

Overview 5

P

Phase - Voltage Detection 89

R

Return Air Temperature Limits 16

Room Sensor Back-up Modes 12

Room Sensor Back-Up Mode Set

Points 12
Room Sensor Mode 18
Room Sensor Parameters 13

S

Safety Switch Input (A42-Optional) 17
Sensors
Carbon Dioxide (Indoor Air Quality) Sensor - Optional 19
Economizer Differential Pressure Sensor - Optional 20
Enthalpy Sensor - Optional 19
Relative Humidity Sensor - Optional 19
Room Sensor - Optional 19
Temperature Sensors - Provided With Unit 19
Sequence of Operation 57
CAV Units in Single-Zone Applications with a Lennox Room Sensor 59
Unit Controller Control Modes 57
Service Relay 54
Service Relays 89
Smoke Detector (A171 and A172 - Optional) 16
Start-up Delay in Room Sensor Mode 13
Supply Air Delivery 46
Blower Delays 46
Cooling Operation 46
Gas / Electric Units 46
Supply Constant Air Volume (CAV) Control Mode 46
Supply Constant Air Volume (CAV) with Zone Bypass Damper Control 47
Supply Multi-Stage Air Volume (MSAV) Control Mode 46
Variable Frequency Drive Control 47
Supply Static Pressure Sensor - Optional
Supply Static Pressure Sensor - Optional 19
System Status Screen 8
System Status Screen
Unit Operation 65

T

Thermal Protection Switches (S5, S7, S8, S31 and S180) 14, 86
Thermostat Bounce Delay (Wired Thermostat Mode Only) 16
Third-Party Zoning 53
Air Delivery Operation 53
Cooling Operation 53
Heating Operation 53
Occupied /Unoccupied Operation 53
Power Exhaust Operation 54

U

Unit Operation 65
USB Flash Drive Interface Usage 6

W

Wired Thermostat Mode 18