ENGINEERING
TOMORROW

Design Guide

VLT® HVAC Drive FC 102

1.1–90 kW, Enclosure Sizes A–C

vlt-drives.danfoss.com | VLT®

Contents

1 Introduction 9
1.1 Purpose of this Design Guide 9
1.2 Additional Resources 9
1.3 Manual Version 9

2 Safety 10
2.1 Safety 10
2.2 Safety Symbols 10
2.3 Qualified Personnel 10

3 Approvals and Certifications 11
3.1 Regulatory/Compliance Approvals for VLT® HVAC Drive FC 102 11
3.2 Typical Product Approvals and Certifications for VLT® Drives 11
3.3 Export Control Regulation 13
3.4 Enclosure Protection Rating 13

4 Product Overview 14
4.1 VLT® Drive Systems 14
4.1.1 Filter Options 14
4.1.2 Supported Motor Types 15
4.1.3 Bearing Currents 16
4.2 Power Drive System 18
4.2.1 Ecodesign for Power Drive Systems 18
4.2.2 Losses in Mains Cabling 19
4.2.3 Input Filters: Line Reactors and Harmonic Filters 20
4.2.4 Drive, Input Side 20
4.2.5 DC Link 21
4.2.6 Drive, Output Side 22
4.2.7 Motor Cables and Motor 22
4.3 Functional Safety 22
4.4 Service Log 22

5 Product Features 24
5.1 Automated Operational Features 24
5.1.1 Automatic Energy Optimization 24
5.1.2 Short-circuit Protection 24
5.1.3 Overvoltage Protection 25
5.1.4 Missing Motor Phase Detection 25

5.1.5 Mains Phase Imbalance Detection 25
5.1.6 Service Switch on the Output 25
5.1.7 Overload Protection 26
5.1.8 Locked Rotor Protection 26
5.1.9 Locked Rotor Protection 26
5.1.10 Automatic Derating 26
5.1.11 Automatic Switching Frequency Modulation 31
5.1.12 Automatic Derating for High Switching Frequency 31
5.1.13 Power Fluctuation Performance 31
5.1.14 Resonance Damping 31
5.1.15 Temperature-controlled Fans 31
5.1.16 EMC Compliance 31
5.1.17 Galvanic Isolation of Control Terminals 31
5.2 Custom Application Features 32
5.2.1 Motor Thermal Protection 32
5.2.2 Built-in PID Controller 32
5.2.3 Safe Torque Off 32
5.3 Load Sharing 33
5.4 Regen Overview 33

6 Options and Accessories Overview 34
6.1 Introduction 34
6.2 VLT® Fieldbus Options 34
6.3 VLT® Functional Extensions 34
6.4 VLT® Programmable Controllers 35
6.5 Kits and Accessories 35
6.5.1 IP21/UL Type 1 Enclosure Kits for VLT® FC Series Enclosure Sizes A, B, and C 35
6.5.2 Mounting Brackets for VLT® FC Series Enclosure Sizes A5, B1, B2, C1, and C2 40
6.5.3 Remote Mounting Kits for LCP 41
6.5.3.1 Remote Mounting Kit for LCP 102 and LCP 103 with Cover for Outdoor Mounting 41
6.5.3.2 Panel Mounting Kit for LCP 102, LCP 101, and LCP 103 43
6.5.4 VLT® Wireless Communication Panel LCP 103 44

7 Specifications 45
7.1 Electrical Data, 200–240 V and 3x115Y/200–139Y/240 V 45
7.2 Electrical Data, 380–480 V and 3x220Y/380–277Y/480 V 47
7.3 Electrical Data, 525–600 V 50
7.4 Electrical Data, 525–690 V 53
7.5 Mains Supply 56

7.6 Motor Output and Motor Data 56
7.6.1 Motor Output (U, V, W) 56
7.6.2 Torque Characteristics 56
7.7 Ambient Conditions 57
7.8 Cable Specifications 57
7.8.1 Motor Cable Length 57
7.8.2 Power Cable Cross-sections 57
7.8.3 Control Cable Cross-sections 58
7.9 Control Input/Output and Control Data 58
7.9.1 Digital Inputs 58
7.9.2 STO Terminal 37 (Terminal 37 is Fixed PNP Logic) 58
7.9.3 Analog Inputs 59
7.9.4 Pulse/Encoder Inputs 59
7.9.5 Digital Outputs 60
7.9.6 Analog Output 60
7.9.7 Control Card, 24 V DC Output 60
7.9.8 Control Card, +10 V DC Output 60
7.9.9 Control Card, RS485 Serial Communication 60
7.9.10 Control Card, USB Serial Communication 60
7.9.11 Relay Outputs 61
7.9.12 Control Card Performance 61
7.9.13 Control Characteristics 61
7.10 Connection Tightening Torques 62
7.11 Power Ratings, Weight, and Dimensions 62

8 Mechanical Installation Considerations 67
8.1 Storage 67
8.2 Operating Environment 67
8.2.1 Gases 67
8.2.2 Dust 68
8.2.3 Outdoor Installation in freezing Temperature Environments 68
8.2.4 Potentially Explosive Atmospheres 69
8.3 Mounting Considerations 70
8.3.1 Side-by-side Mounting 70
8.3.2 Wall Mounting 71
8.4 Derating 72
8.4.1 Derating for Running at Low Speed 72
8.4.2 Derating for Low Air Pressure 72

8.4.3 Derating for Ambient Temperature and Switching Frequency 73

9 Electrical Installation Considerations 79

9.1 Safety Instructions 79
9.2 Wiring Schematic 81
9.3 Cables 83
9.3.1 EMC-correct Cables 83
9.3.2 Preparing Cable Entry Holes 84
9.3.3 Specifications of Entry Holes 84
9.3.4 Tightening Torques for Cover 92
9.4 Control Wiring and Terminals 93
9.4.1 Shielded Control Cables 93
9.4.2 Wiring to Control Terminals 94
9.4.3 Control Terminal Types 94
9.4.4 Terminal Descriptions 95
9.5 Fuses and Circuit Breakers 97
9.5.1 Fuse Recommendations 97
9.5.2 CE Compliance 97
9.5.3 UL Compliance (61800-5-1) 100
9.5.4 UL Compliance (508C) 101
9.6 Disconnects and Contactors 105
9.7 Motor 107
9.7.1 Motor Thermal Protection 107
9.7.2 Parallel Connection of Motors 107
9.7.3 Motor Insulation 109
9.7.4 Motor Bearing Currents 109
9.8 Braking 110
9.8.1 Selection of Brake Resistor 110
9.8.2 Control with Brake Function 112
9.9 Residual Current Device 112
9.10 Leakage Current 112
9.10.1 Using a Residual Current Device (RCD) 114
9.11 Efficiency 114
9.12 Acoustic Noise and Airflow 115
9.13 dU/dt Conditions 116
9.13.1 dU/dt Values, 200–240 V (T2) 117
9.13.2 dU/dt Values, 380–480 V (T4) 119
9.14 Electromagnetic Compatibility (EMC) Overview 121

9.14.1 EMC Test Results 121
9.14.2 Emission Requirements 123
9.14.3 Immunity Requirements 124
9.14.4 EMC Compatibility 125
9.15 EMC-compliant Installation 126
9.16 Harmonics Overview 129
9.16.1 Harmonics Analysis 129
9.16.2 Effect of Harmonics in a Power Distribution System 130
9.16.3 IEC Harmonic Standards 131
9.16.4 Harmonic Results (Emission) 132
9.16.5 Harmonic Mitigation 133
9.16.6 Harmonic Calculation 133
9.16.7 Line Reactors 133
9.17 Connections 134
9.17.1 Power Connections 134
9.17.2 IT Grid Connection 135
9.17.3 DC Bus Connection 135
9.17.4 Load Sharing Connection 136
9.17.5 Brake Cable Connection 136
9.17.6 Grounding 136
9.17.7 Safety Ground Connection 137

10 Basic Operating Principles 138
10.1 Introduction 138
10.2 Drive Controls 138
10.3 Reference Limits 138
10.4 Control Principle 140
10.4.1 Control Structure Open Loop 140
10.4.2 Control Structure Closed Loop 140
10.4.3 Example of Closed-loop PID Control 141
10.4.4 Control Structure in VVC+ 142

11 Basic I/O Configurations 143
11.1 Application Examples 143
11.1.1 Wiring Configuration for Automatic Motor Adaptation (AMA) 143
11.1.2 Wiring Configuration for Automatic Motor Adaptation without T27 144
11.1.3 Wiring Configuration: Speed 144
11.1.4 Wiring Configuration: Feedback 146
11.1.5 Wiring Configuration: Run/Stop 148

11.1.6 Wiring Configuration: Start/Stop 150
11.1.7 Wiring Configuration: External Alarm Reset 152
11.1.8 Wiring Configuration: RS485 153
11.1.9 Wiring Configuration: Motor Thermistor 154
11.1.10 Wiring Configuration for a Relay Setup with Smart Logic Control 155

12 How to Order a Drive 156
12.1 Drive Configurator 156
12.1.1 Type Code 156
12.1.2 Language Packages 158
12.2 Order Numbers for Options and Accessories 158
12.2.1 Order Numbers for Options for Slot A 158
12.2.2 Order Numbers for Options for Slot B 159
12.2.3 Order Numbers for Options for Slot C 159
12.2.4 Order Numbers for Options for Slot D 159
12.2.5 Order Numbers for Miscellaneous Hardware 160
12.2.6 Order Numbers for Local Control Panel Options 161
12.2.7 Order Numbers for PC Software 161
12.2.8 Ordering of Brake Resistors 162
12.2.9 Order Numbers for Accessory Bags 174
12.2.10 Ordering of Harmonic Filters 175
12.2.11 Order Numbers for VLT® Sine-wave Filters MCC 101 182
12.2.12 Order Numbers for VLT® dU/dt Filters MCC 102 184
12.2.13 Spare Parts 185

13 Appendix 186
13.1 Symbols and Abbreviations 186

1 Introduction

1.1 Purpose of this Design Guide

This design guide is intended for qualified personnel, such as:

- Project and systems engineers.
- Design consultants.
- Application and product specialists.

The design guide provides technical information to understand the capabilities of the VLT® HVAC Drive FC 102 for integration into motor control and monitoring systems. Its purpose is to provide design considerations and planning data for integration of the drive into a system. It caters for selection of drives and options for a diversity of applications and installations. Reviewing the detailed product information in the design stage enables developing a well-conceived system with optimal functionality and efficiency.

This manual is targeted at a worldwide audience. Therefore, wherever occurring, both SI and imperial units are shown.

VLT® is a registered trademark for Danfoss A/S.

1.2 Additional Resources

Various resources are available to understand advanced drive operation, programming, and directives compliance.

- The **Operating Guide** provides detailed information for the installation and start-up of the drive.
- The **Programming Guide** provides greater detail on how to work with parameters. It also contains application examples.
- The **VLT® Safe Torque Off Operating Guide** describes how to use Danfoss VLT® drives in functional safety applications. This manual is supplied with the drive when the Safe Torque Off option is present.
- The **VLT® Brake Resistor MCE 101 Design Guide** describes how to select the optimal brake resistor.
- The **VLT® Advanced Harmonic Filters AHF 005/AHF 010 Design Guide** describes harmonics, various mitigation methods, and the operation principle of the advanced harmonic filter. This guide also describes how to select the correct advanced harmonics filter for a particular application.
- The **Output Filter Design Guide** explains why it is necessary to use output filters for certain applications and how to select the optimal dU/dt or sine-wave filter.
- Supplemental publications and manuals are available at www.danfoss.com.

Optional equipment is available that may change some of the information described in these publications. Be sure to follow the instructions supplied with the options for specific requirements.

Contact a Danfoss supplier or visit www.danfoss.com for more information.

1.3 Manual Version

This manual is regularly reviewed and updated. All suggestions for improvement are welcome.

The original language of this manual is English.

Table 1: Manualt Version

Edition	Remarks
AJ299549559248-0101	Added UL 61800-5-1 updates to Electrical Data and Fuse sections.l

2 Safety

2.1 Safety

When designing AC drives, some residual dangers cannot be avoided constructively. One example is the discharge time, which is very important to observe to avoid potential death or serious injury. For the Danfoss VLT® drives, the discharge time is from 4–40 minutes depending on the drive size.

For further information on safety precautions, refer to the product-specific Operating Guide.

2.2 Safety Symbols

The following symbols are used in this manual:

⚠ D A N G E R ⚠
Indicates a hazardous situation which, if not avoided, will result in death or serious injury.

⚠ W A R N I N G ⚠
Indicates a hazardous situation which, if not avoided, could result in death or serious injury.

⚠ C A U T I O N ⚠
Indicates a hazardous situation which, if not avoided, could result in minor or moderate injury.

N O T I C E
Indicates information considered important, but not hazard-related (for example, messages relating to property damage).

2.3 Qualified Personnel

To allow trouble-free and safe operation of the unit, only qualified personnel with proven skills are allowed to transport, store, assemble, install, program, commission, maintain, and decommission this equipment.

Persons with proven skills:

- Are qualified electrical engineers, or persons who have received training from qualified electrical engineers and are suitably experienced to operate devices, systems, plant, and machinery in accordance with pertinent laws and regulations.
- Are familiar with the basic regulations concerning health and safety/accident prevention.
- Have read and understood the safety guidelines given in all manuals provided with the unit, especially the instructions given in the Operating Guide.
- Have good knowledge of the generic and specialist standards applicable to the specific application.

3 Approvals and Certifications

3.1 Regulatory/Compliance Approvals for VLT® HVAC Drive FC 102

This section provides a brief description of the various approvals and certifications that may be found on Danfoss VLT® drives. Not all listed approvals and certifications are valid for all drives, as they can be product-, application-, and country-specific.

The product label identifies which certifications apply to that individual drive. Specific certificates for VLT® HVAC DriveFC 102 can be found on the Danfoss homepage www.danfoss.com

NOTICE

IMPOSED LIMITATIONS ON THE OUTPUT FREQUENCY

The output frequency of the drive is limited to 590 Hz due to export control regulations. The software versions cannot be flashed.

3.2 Typical Product Approvals and Certifications for VLT® Drives

The VLT® HVAC Drive product series complies with a wide scope of required standards and directives. Information on the specific product certifications can be found on the product label.

3.2.1 CE Mark

The drive complies with relevant directives and their related standards for the extended Single Market in the European Economic Area.

Table 2: EU directives applicable to drives

EU Directive	Version
Low Voltage Directive	2014/35/EU
EMC Directive	2014/30/EU
Machinery Directive[1]	2014/42/EU
ErP Directive	2009/125/EU
ATEX Directive	2014/34/EU
RoHS Directive[2]	2011/65/EU
Radio Equipment Directive[3]	2014/53/EU
REACH Directive	1907/2006/EC

[1] Machinery Directive conformance is only required for drives with an integrated safety function.

[2] For China RoHS, contact Danfoss application support to get the certificate.

[3] Radio Equipment Directive is only required for interfaces supporting wireless communication.

3.2.1.1 Low Voltage Directive

The aim of the Low Voltage Directive is to protect persons, domestic animals, and property against dangers caused by the electrical equipment, when operating electrical equipment that is installed and maintained correctly, in its intended application. The directive applies to all electrical equipment in the 50–1000 V AC and the 75–1500 V DC voltage ranges.

3.2.1.2 EMC Directive

The purpose of the EMC (electromagnetic compatibility) Directive is to reduce electromagnetic interference and enhance immunity of electrical equipment and installations. The basic protection requirement of the EMC Directive states that devices that generate electromagnetic interference (EMI), or whose operation could be affected by EMI, must be designed to limit the generation of electromagnetic interference and shall have a suitable degree of immunity to EMI when properly installed, maintained, and used as

intended. Electrical equipment devices used alone or as part of a system must bear the CE mark. Systems do not require the CE mark, but must comply with the basic protection requirements of the EMC Directive.

3.2.1.3 Machinery Directive

The aim of the Machinery Directive is to ensure personal safety and avoid property damage to mechanical equipment used in its intended application. The Machinery Directive applies to a machine consisting of an aggregate of interconnected components or devices of which at least 1 is capable of mechanical movement. Drives with an integrated functional safety function must comply with the Machinery Directive. Drives without a functional safety function do not fall under the Machinery Directive. If a drive is integrated into a machinery system, Danfoss can provide information on safety aspects relating to the drive. When drives are used in machines with at least 1 moving part, the machine manufacturer must provide a declaration stating compliance with all relevant statutes and safety measures.

3.2.1.4 ErP Directive

The ErP Directive is the European Ecodesign Directive for energy-related products. The directive sets ecodesign requirements for energy-related products, including drives, and aims at reducing the energy consumption and environmental impact of products by establishing minimum energy-efficiency standards.

3.2.1.5 ATEX Directive

Illustration 1: ATEX Logo

3.2.1.6 RoHS Directive

The Restriction of Hazardous Substances (RoHS) Directive is an EU directive that restricts the use of hazardous materials in the manufacturing of electronic and electrical products. Read more on www.danfoss.com.

3.2.1.7 Radio Equipment Directive

Devices that emit or receive radio waves as part of radio communication are required to comply with the Radio Equipment Directive. The drive itself does not contain a radio device, and hence compliance to the directive is not relevant. However, user interfaces containing active radio devices, such as the control panel with wireless communication capabilities, comply with the directive.

3.2.2 REACH Directive

Compliance with European REACH regulation on Registration, Evaluation, Authorization, and Restriction of Chemicals. Read more on www.danfoss.com.

3.2.3 UL Listing

3.2.4 CSA/cUL

3.2.5 UkrSEPRO

089

3.2.6 RCM Mark Compliance

3.2.7 Marine Type Approvals

VLT® HVAC Drive drives have several marine type approvals. For a list of the approvals and certifications, see the FC 102 product page at www.danfoss.com.

3.2.8 Moroccan Conformity Mark

The drive complies with relevant directives and their related standards for the Morocco market.

3.3 Export Control Regulation

AC drives can be subject to regional and/or national export control regulations. Both the EU and US have regulations for so-called dual-use products (products for both military and non-military use), which currently includes AC drives with a capacity to operate from 600 Hz upwards. These products can still be sold, but it requires a set of measures, for example a license, or an end-user statement.

The US also has regulations for AC drives with a capacity to operate 300–600 Hz with restrictions on sales for certain countries. US regulations apply to all products manufactured in the US, exported from or via the US, or with a US content of more than 25%, or 10% for some countries.

An ECCN number is used to classify all AC drives that are subject to export control regulations. The ECCN number is provided in the documentation accompanying the AC drive. If the AC drive is re-exported, it is the responsibility of the exporter to ensure compliance with the relevant export control regulations.

For further information, contact Danfoss.

3.4 Enclosure Protection Rating

The VLT® drive series are available in various enclosure protection ratings to accommodate the needs of the application. Enclosure protection ratings are provided based on 2 international standards:

- UL type validates that the enclosures meet NEMA (National Electrical Manufacturers Association) standards. The construction and testing requirements for enclosures are provided in NEMA Standards Publication 250-2003 and UL 50, 11th edition.
- IP (Ingress Protection) ratings outlined by the IEC (International Electrotechnical Commission) in the rest of the world.

The standard Danfoss VLT® drive series are available in various enclosure protections to meet the requirements of IP00 (UL Open Type), IP20 (UL Open Type), IP21 (UL Type 1), or IP54 (UL Type 12).

4 Product Overview

4.1 VLT® Drive Systems

Danfoss offers drives in different enclosure types for a wide range of applications.

Standalone AC drives

The Danfoss standalone AC drives are so robust that they can be mounted outside of cabinets almost anywhere, even right beside the motor. Equipped for the toughest of environment, they suit any application.

More uncompromising features:

- Enclosure sizes with protection ratings up to IP66/UL Type 4X.
- Full EMC compliance according to international standards.
- Ruggedized and coated PCBs.
- Wide temperature range, operating from -20 °C to +50 °C (-4 °F to 122 °F).
- Motor cable lengths up to 150 m (492 ft) shielded/300 m (984 ft) unshielded as standard with uncompromised performance.

Enclosed drives

Danfoss drives are designed with the installer and operator in mind to save time on installation, commissioning, and maintenance.

VLT® enclosed drives are designed for full access from the front. After opening the cabinet door, all components can be reached without removing the drive, even when mounted side by side.

Several cooling options, including back-channel cooling, provide optimum adaption to the installation location and application.

More time-saving features:

- An intuitive user interface with an award-winning local control panel (LCP) and common control platform that streamlines start-up and operating procedures.
- Robust design and advanced controls make Danfoss drives virtually maintenance-free.

Modules

The compact design of the VLT® high-power drive modules makes them easy to fit even in small spaces. Integrated filters, options, and accessories provide extra capabilities and protection without increasing the enclosure size.

More space-saving features:

- Built-in DC-link reactors for harmonic suppression eliminate the need for higher loss external AC line reactors.
- Optional built-in RFI filters are available throughout the power range.
- Optional input fuses and load share terminals are available within the standard enclosures.
- In addition to the many valuable features that the Danfoss drives offer as standard, there are several other control, monitoring, and power options available in pre-engineered factory configurations.

For more details on the enclosure types, the modularity, and the applications, see the product-specific selection guides on www.danfoss.com.

4.1.1 Filter Options

Filters are often extra components that must be planned for when designing the power drive system. It is important to understand why and when to use output filters with Danfoss drives.

For more details on output filters, refer to Output Filters Design Guide.

4.1.1.1 Protection of Motor Insulation

The output voltage of the drive is a series of trapezoidal pulses with a variable width (pulse width modulation) characterized by a pulse rise time, t_r. When a transistor in the inverter switches, the voltage across the motor terminal increases by a dU/dt ratio depending on:

- The motor cable (type, cross-section, length, shielded or unshielded, inductance, and capacitance).
- The high-frequency surge impedance of the motor.

Because of the impedance mismatch between the cable characteristic impedance and the motor surge impedance, a wave reflection occurs, causing a ringing voltage overshoot at the motor terminals. To reduce motor insulation stresses, use either sine-wave filters or dU/dt filters.

4.1.1.2 Reduction of Motor Acoustic Noise

There are 3 main sources for generation of acoustic noise in the motor:

- The magnetic noise produced by the motor core through magnetostriction.
- The noise produced by motor bearings.
- The noise produced by motor ventilation.

When a motor is fed by a drive, the pulse-width-modulated (PWM) voltage applied to the motor causes extra magnetic noise at the switching frequency and harmonics of the switching frequency (mainly the double of the switching frequency). In some applications, this is not acceptable. To eliminate this additional switching noise, use a sine-wave filter. This filter filters the pulse-shaped voltage from the drive and provides a sinusoidal phase-to-phase voltage at the motor terminals.

4.1.1.3 Reduction of High-frequency Electromagnetic Noise in Motor Cables

Using filters reduces noise generated in the motor cables.

When no filters are used, the ringing voltage overshoot that occurs at the motor terminals is the main high-frequency noise source. The noise can be explained by the correlation between the frequency of the voltage ringing at the motor terminals and the spectrum of the high-frequency conducted interference in the motor cable. Besides this noise component, there are also other noise components such as:

- The common-mode voltage between phases and ground at the switching frequency and its harmonics - high amplitude but low frequency.
- High-frequency noise (above 10 MHz) caused by the switching of semiconductors - high frequency but low amplitude.

Installing an output filter gives the following advantages:

- dU/dt filters reduce the frequency of the ringing oscillation to a level below 150 kHz.
- Sine-wave filters eliminate the ringing oscillation and the motor receives a sinusoidal phase-to-phase voltage.

4.1.1.4 Bearing Currents and Shaft Voltage

Fast switching transistors in the drive combined with an inherent common-mode voltage (voltage between phases and ground) generate high-frequency bearing currents and shaft voltages. While bearing currents and shaft voltages can also occur in direct-on-line motors, these phenomena are accentuated when the motor is fed from a drive.

Most bearing damage in motors fed by drives is caused by vibrations, misalignment, excessive axial or radial loading, improper lubrication, and impurities in the grease. Sometimes, bearing damage is caused by bearing currents and shaft voltages. The mechanism that causes bearing currents and shaft voltages is complicated to explain, but it is important to know that it exists. Two main mechanisms can be identified:

- Capacitive coupling: The voltage across the bearing is generated by parasitic capacitances in the motor.
- Inductive coupling: Caused by circulating currents in the motor.

The grease film of a running bearing behaves like isolation. The voltage across the bearing can cause a breakdown of the grease film and produce a small electric discharge (a spark) between the bearing balls and the running track. This discharge produces a microscopic melting of the bearing ball and running track metal and over time it causes the premature wear-out of the bearing. This mechanism is called electrical discharge machining (EDM).

Reduce bearing limit stress by using common-mode filters. Sine-wave filters reduce circulating currents but not common-mode currents.

4.1.2 Supported Motor Types

Today, the drive-controlled, 3-phase motor is a standard element in all automated applications. High-efficiency induction motors, but also motor designs such as permanent magnet motors, EC motors, and synchronous reluctance motors, need regulation with AC drives. Many motors cannot be operated directly from the 3-phase standard power supply.

The Danfoss VLT® drives can control multiple motor technologies:

- Induction motors (IM).
- Surface permanent magnet motors (SPM).
- Interior permanent magnet motors (IPM).
- Synchronous reluctance motors (SynRM).
- Permanent magnet assisted synchronous reluctance motors (PMaSynRM).

Standard IEC line motors (IEC 60034-30-1)

The standard IEC 60034-30-1 of March 2014 replaces the standard 60034-30:2008, which has defined 3 efficiency levels for 3-phase induction motors. The updated standard IEC 60034-30-1 now includes the 4th efficiency level, IE4. Furthermore, 8-pole motors and an extended power range are now included in the standard.

Efficiency classes:

In the IEC 60034-30-1, the following efficiency classes are defined for induction motors:

- IE1 (Standard efficiency).
- IE2 (High efficiency).
- IE3 (Premium efficiency).
- IE4 (Super premium efficiency).

IE = Internation efficiency.

These motor types can all be operated with Danfoss VLT® drives.

More information on this topic can be found in the publication Motor Technologies for Higher Efficiency in Applications. This document can be downloaded from www.danfoss.com.

4.1.3 Bearing Currents

Protecting the motor insulation and bearings

The drive employs modern IGBT inverter technology. Regardless of the frequency, the drive output comprises pulses of approximately the drive DC bus voltage with a very short rise time. The pulse voltage can almost double at the motor terminals, depending on the attenuation and reflection properties of the motor cable and the terminals. This can cause extra stress on the motor and motor cable insulation. Modern AC drives with their fast-rising voltage pulses and high-switching frequencies can generate current pulses that flow through the motor bearings. Gradually, these current pulses can erode the bearing races and rolling elements. Optional dU/dt filters protect the motor insulation system and reduce bearing currents. Optional common-mode filters mainly reduce bearing currents. Insulated N-end (non-drive end) bearings protect the motor bearings.

Practical tips

Usually, the shielding surface of the motor cable is connected to the frame of the terminal box and not to the motor stator frame. However, the motor terminal box on some motors can be mounted to the stator housing with a considerable change of the high-frequency currents and impedance. Typically, there is a gasket between the terminal box and the stator frame, and the box is attached to the motor frame with 4 small screws. Conducted measurements on these motors showed that screws did not provide a low impedance from the terminal box to the stator and therefore, the common-mode currents were oscillated with a noticeable magnitude.

Applying high-frequency bonding straps between the motor terminal box and the stator frame helps providing low impedance for high-frequency currents and therefore eliminating the common-mode current oscillations in the installation.

Illustration 2: Installation of EMC straps from the Terminal Box to the Motor Frame

Sometimes, so called NYCWY cables are used to connect the motor to the drive inverter. The symmetry of the PE conductor in these cables is achieved by a conductor surrounding all the phase leads. These cables, however, prevent common-mode currents at the fundamental frequency only.

To avoid common-mode currents at fundamental and high frequencies at the same time, use multicore symmetric motor cables with 3 ground conductors with a shield.

Applying common-mode cores

Common-mode cores across motor cable conductors effectively reduce high-frequency motor bearing currents. On motors with a power rating of approximately 100 kW and onwards, the result of reduction of bearing currents is most evident.

High-frequency common-mode cores may have an oval or round shape and they are easy-to-install components.

Install common-mode cores in a way that only unshielded power cores of the motor cable are wired through the core. The PE and shielding wires must be placed outside of the core. It is also important that all 3 motor phase wires are wired through the same core. Otherwise, the cores do not provide the required functionality.

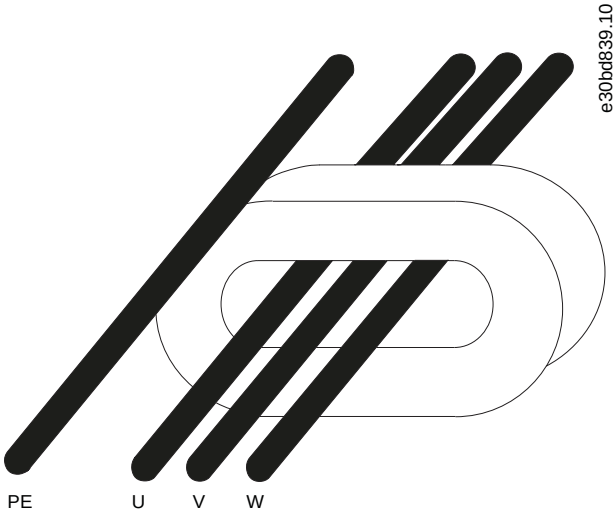

Illustration 3: Installing Common-mode Cores

Depending on the power rating of the drive installation and the quantity of motor cables connected in parallel, several same-size common-mode cores might be used. In dedicated product manuals, preselection tables advise on the required minimal quantity of single common-mode cores to install. The number of cores depend on the power rating, the nominal voltage of the drive installation, and the length of the applied motor cables.

Applying common-mode cores on motor cables connected in parallel

If many motor cables connected in parallel are used and the power wires of all cables cannot be fitted through the common-mode cores, place the required number of cores on each individual motor cable. This ensures the saturation of the core due to likely unequal current sharing between cables. Wire all 3-phase conductors of each cable through 1 set of cores.

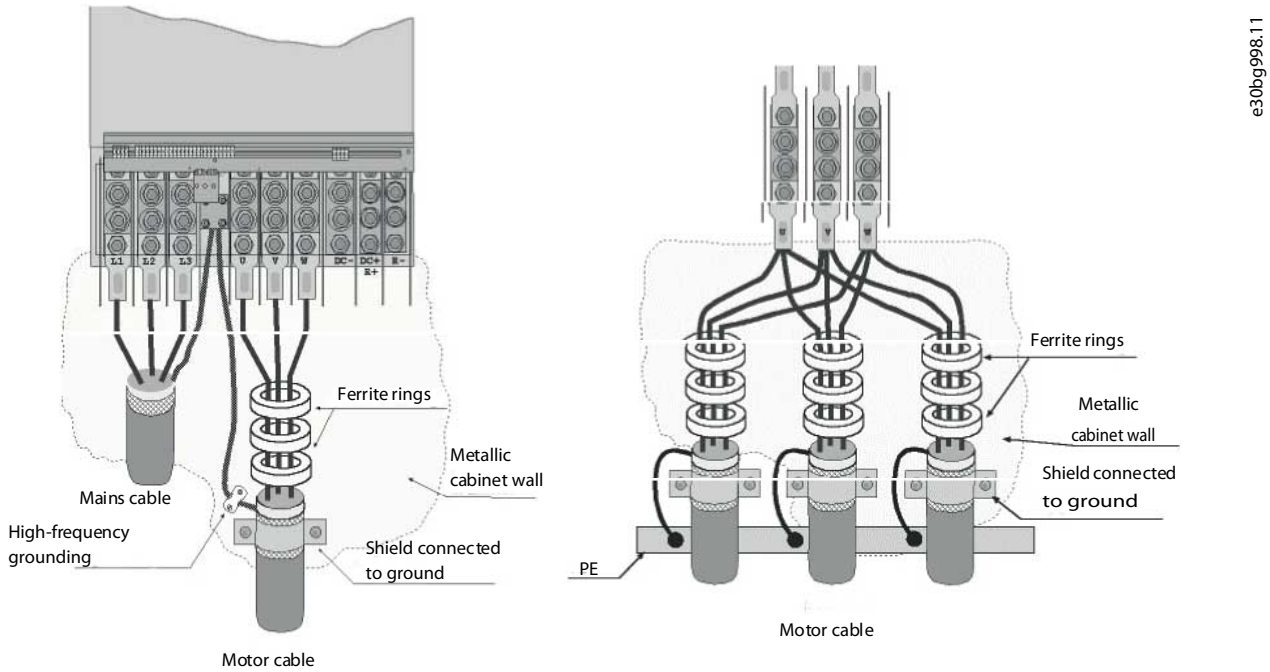

Illustration 4: Installation of CM Cores on Cables Connected in Parallel

As losses of common-mode cores are low, the expected temperature of the core is below 60 °C (140 °F) under normal circumstances. Thus common-mode cores can also be accommodated inside the motor terminal box. If cores cannot be fitted inside the drive housing or the motor terminal box, they can be placed in an external cabinet close to the motor.

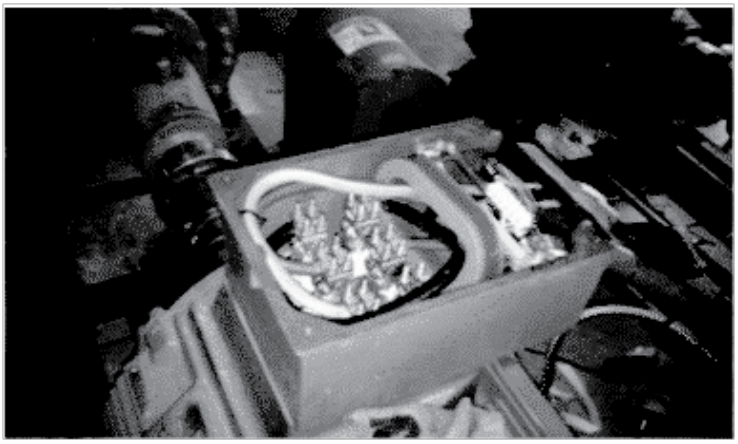

Illustration 5: Mounting of CM Cores Inside the Motor Terminal Box

To ensure minimal bearing currents in the motor, Danfoss recommends ordering the drive with output motor filters as a power option.

4.2 Power Drive System

4.2.1 Ecodesign for Power Drive Systems

The Ecodesign Directive is the legislative framework that sets requirements on all energy-related products in the domestic, commercial, and industrial sectors throughout Europe.

The Ecodesign requirements are only mandatory within the European Union. These requirements are like the legislative requirements for energy-related products which apply in North America and Australia.

Terms like Complete Drive Module (CDM) and Power Drive Systems (PDS) are used to define the elements in the design. The objective is to make more efficient and fewer energy consuming designs.

The CDM contains the drive controller, auxiliary devices, and input components.

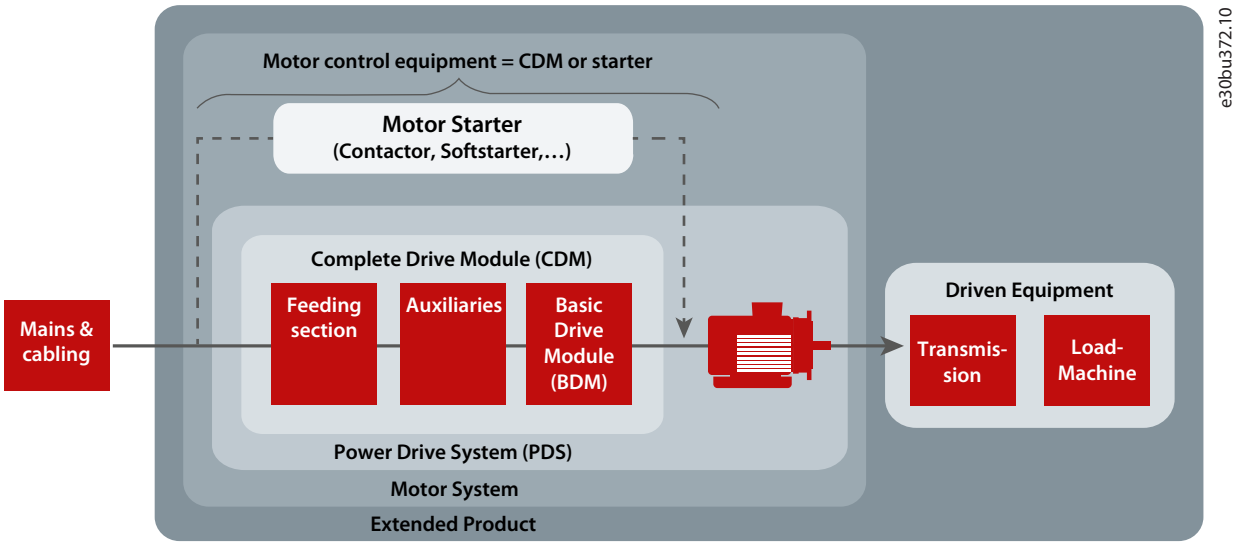

Illustration 6: Drive System Design

The efficiency classes IE0 to IE2 of the drive controller as specified in IEC 61800-9-2 (EN 50598-2) refer to the 90/100 operating point, for example, 90 % motor stator frequency and 100% torque current. See Illustration 7.

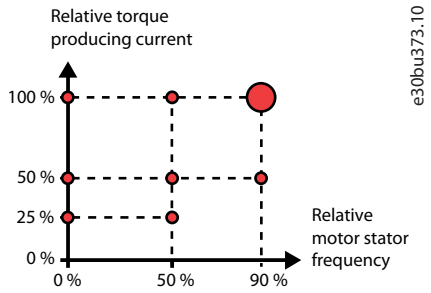

Illustration 7: Operating Point according to IEC 61800-9-2 (EN 50598)

Since in the future all component manufacturers will disclose their loss data according to this new standard, optimized applications can be designed with a wide range of different components. The new Standard allows an accurate preliminary calculation of the power losses, so that the ROI (Return of Investment) can be reliably determined. Up to now the overall efficiency of speed-regulated electric motors was estimated with the aid of approximate energy consumption calculations.

It is now possible to determine the total losses of a system for the 8 operating points defined in the standard, including the part load operation, via a simple addition of power losses. Danfoss helps its customers to avoid having to rely on system solution providers, to ensure that their systems will retain a competitive advantage also in the future.

EC 61800-9-2 (EN 50598-2) shifts the focus from the individual component to the efficiency of the whole drive system. The new efficiency classes (International Efficiency for Systems, IES) allow a simple determination of the total losses for a whole drive system (PDS).

Danfoss offers the MyDrive® ecoSmart™ tool, which is available online or as a Smartphone app to assist with the efficiency calculation. Use MyDrive® ecoSmart™ to:

- Look up part load data as defined in IEC 61800-9-2, for VLT® and VACON® drives
- Calculate efficiency class and part load efficiency for drives and power drive systems
- Create a report documenting part load loss data and IE or IES efficiency class.

For more information, refer to http://ecosmart.danfoss.com.

Refer to Illustration 8 to see the components in the PDS which contribute to losses in the design. Mains cables and the load machine are not a part of the PDS, even though their losses can be significant and could be a part of the evaluation of the overall energy efficiency of the installation.

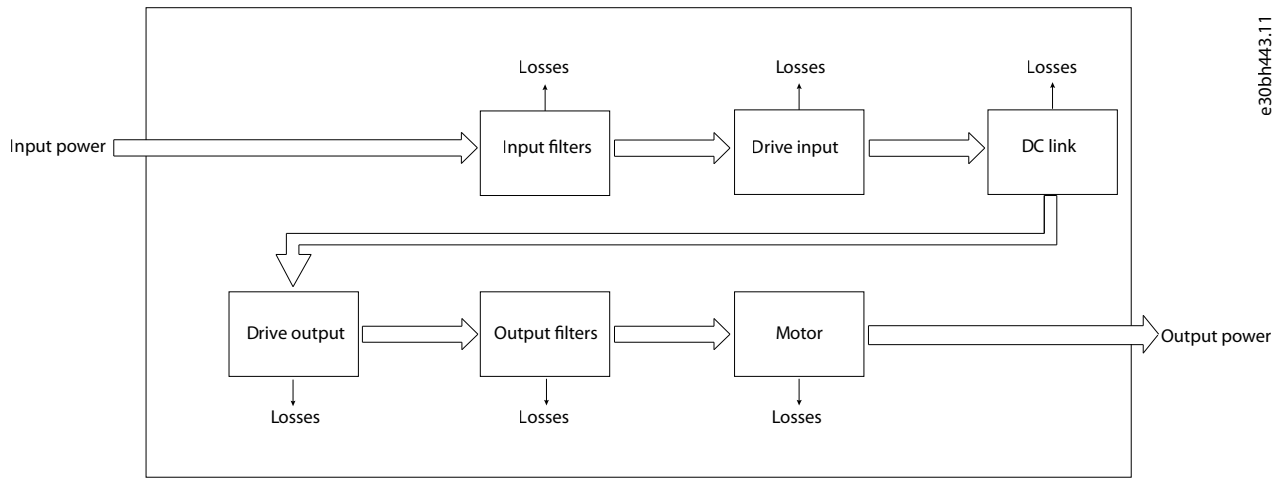

Illustration 8: Losses in a Power Drive System

4.2.2 Losses in Mains Cabling

The cabling from the supply must be considered, as the selection of suitable cables is often a problem, especially when dedicated feeding transformers are installed. From the impedance of the cables, the energy losses are created in the ohmic part. Calculate the active power losses for a 3-phase system with a star point grounding as follows:

$P_{L,mains} = 3 \times R \times I_{L1}^2$

Because the load, when using drives and motors, also include reactive power and harmonic currents, these parameters also contribute to losses. The ratio between active and apparent power is normally called the power factor. Having a PDS with a power factor close to 1 result in the lowest losses in the mains. Using filters on the input side of the drive can lower the power factor.

4.2.3 Input Filters: Line Reactors and Harmonic Filters

Line reactor

A line reactor is an inductor which is wired in series between a power source and a load. Line reactors, also called input AC reactors, are typically used in motor drive applications.

The main function of the line reactor lies into its current-limiting characteristics. Line reactors also reduce the main harmonics, limit the inrush currents, and protect drives and motors. An overall improvement of the true power factor and the quality of the input current waveform can be achieved.

Line reactors are classified by their percent impedance (denoted as percent IZ or %IZ), which is the voltage drop due to impedance, at the rated current, expressed as a percent of rated voltage. The most common line reactors have either 3% or 5% impedance.

When to use line reactors

It is important to consider the installation environment for the drives. In some situations, distortion from the grid can damage the drive and precautions must be taken.

A simple means of prevention is to ensure a minimum of impedance in front of the drive.

When calculating the impedance, the contribution from the supply transformer and the supply cables is also a part of the circuit. In specific cases, an additional transformer or reactor is recommended. If the conditions listed exist, consider adding impedance (line reactor or transformer) in front of the drive:

- The installation site has switched power factor correction capacitors.
- The installation site has lightening strikes or voltage spikes.
- The installation site has power interruptions or voltage dips.

Danfoss offers the line reactor program VLT® Line Reactor MCC 103, see Danfoss.com.

Harmonic filters

The purpose of using harmonic filters is to reduce the distortion on the mains. The distortion is generated by the drives when switching the voltage to generate a frequency on the output. The harmonics should be limited both seen from energy consumption perspective and disturbance of other users in the grid.

There are 2 categories of harmonic solutions:

- Passive.
- Active.

Passive solutions consist of capacitors, inductors, or a combination of both in different arrangements. The simplest solution is to add inductors/reactors of typically 3–5% in front of the drive. This added inductance reduces the number of harmonic currents produced by the drive. More advanced passive solutions combine capacitors and inductors in trap arrangements specially tuned to eliminate harmonics starting from, for example, the 5th harmonic.

For more details on the Danfoss passive solutions, refer to VLT® Advanced Harmonic Filters AHF 005/AHF 010 Design Guide.

The active solutions determine the exact current that cancels the harmonics present in the circuit and synthesizes and injects that current into the system. Thus, the active solution mitigates the real-time harmonic disturbances, which makes these solutions effective at any load profile.

For more details on the Danfoss active solutions, refer to VLT® Low Harmonic Drive Operating Instructions, and VLT® Advanced Active Filter AAF 006 Operating Instructions.

4.2.4 Drive, Input Side

RFI (radio frequency interference)

Drives generate radio frequency interference (RFI) due to their variable-width current pulses. Drives and motor cables radiate these components and conduct them into the mains system.

RFI filters are used to reduce this interference on the mains according to IEC 61800-3 in order not to disturb radio services. Maximum allowed emission depends on the environment where the PDS is used.

The need for reducing the interferences and the losses created by the coils is a trade-off that is hard to influence in the use of drives. Even though the losses exist, it is important to fulfill the legislation demands for the installation environment.

RFI filter on IT grid

If the drive is supplied from an isolated mains source (IT mains, floating delta) or TT/TN-S mains with grounded leg (grounded delta), the RFI filter must be turned off.

In the OFF position, the internal capacitors between the chassis (ground), the input RFI filter, and the DC link are cut off. As the RFI switch is turned off, the drive is not able to meet optimum EMC performance.

By opening the RFI filter switch, the ground leakage currents are also reduced, but not the high-frequency leakage currents caused by the switching frequency of the drive. It is important to use isolation monitors that are designed for use with power electronics (IEC 61557-8). For example, Deif type SIMQ, Bender type IRDH 275/375, or similar.

The Danfoss VLT® drives can be ordered with different types of RFI filters. See more details on RFI, the use of RFI filters, and EMC compliance in 9.14 Electromagnetic Compatibility (EMC) Overview.

Passive diode rectifier input

The use of diode rectifiers on the input side of the drives are the most cost-effective design. The energy flow goes from the mains to the load and have low losses, however diodes create harmonics in the mains when rectifying and create losses. These harmonics can be reduced by having DC-link coils, which are used in the Danfoss VLT® drives.

An energy flow from the drive back to the grid is not possible with this design as the energy is generated back from the application to the DC link. Use a DC brake chopper and a connected resistor to absorb the energy. This method reduces the energy efficiency significantly. If more drives are installed, an improvement can be gained via load sharing by connecting the DC links, see 9.17.4 Load Sharing Connection. For information about the use of brake resistors for drives ordered with built-in brake choppers, refer to 9.8.1 Selection of Brake Resistor and 9.8.2 Control with Brake Function.

Active front end

In contrast to the diode rectifier, the active front end can generate excessive energy from the DC link back to the mains. In regenerative applications, this design provides a significant improvement of the energy efficiency. This technology also has advantages in relation to harmonics compensation and a more stable DC-link voltage. The design has similar functions on the input as on the output. However,there are losses generated by the IGBTs switching on and off, which influence the energy efficiency. Also, due to the extra IGBTs, this solution can be more expensive and is not used as often as the passive diode rectifier.

4.2.5 DC Link

The DC link is a power storage facility for the output section of the drive. There are 2 major components to the DC-link section:

- Capacitors
- Coils

In Illustration 9 only 1 capacitor is shown, but it is always a series of capacitors.

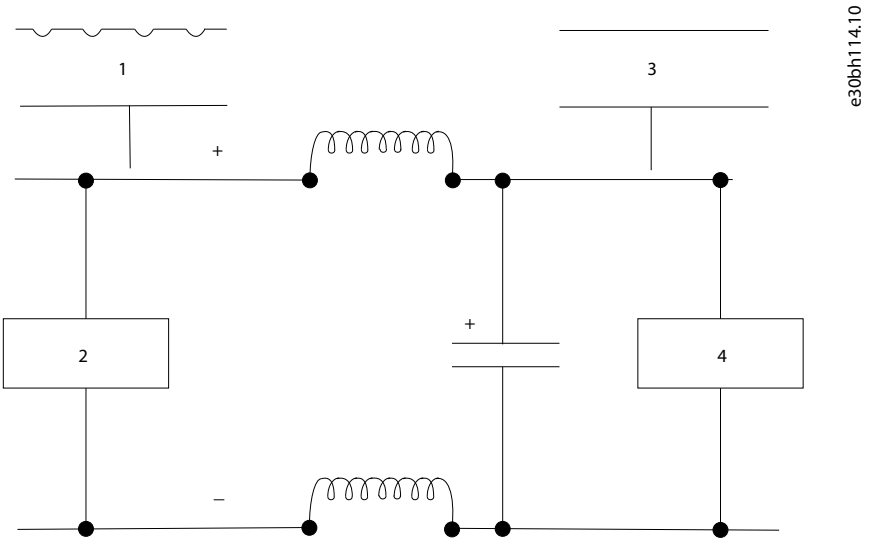

Illustration 9: Wiring Diagram of the DC Link

1	Direct current (AC ripple)	3	Direct current
2	Rectifier	4	Inverter

With Danfoss VLT® drives, this intermediate section always uses DC coils, also known as DC line reactors or DC chokes. For cost considerations, most other drive manufacturers do not offer these DC line reactors as standard equipment. Danfoss regards these coils as essential for 2 main reasons:

- The ability to reduce harmonic noise (interference) by 40%.
- The ability to ride through a temporary loss of power. This allows the drive to avoid numerous unplanned shutdowns.

4.2.6 Drive, Output Side

The output side of the drive contains IGBTs used for generating a variable AC voltage with variable frequency. If no filters are used, overvoltage spikes, due to reflection of the voltage waveform, can be measured on the motor connection. This situation is often linked with long motor cables used in the installation and can reach values up to twice the level of the DC-link voltage.

From a user perspective, losses on the output side of the drive can be influenced by using a lower switching frequency, but this also contributes to higher losses in the motor and filters installed. To optimize energy efficiency, a compromise must be found when selecting the components used, for example, filters, motor type, and others. Often, output filters are used with the purpose of reducing stress on the insulation.

In the following sections, the aspect of different filter types is discussed in perspective of energy efficiency versus function.

Common-mode filters

Common-mode HF filters are placed between the drive and the motor. They are nanocrystaline cores that mitigate high-frequency noise in the motor cable (shielded or unshielded) and eliminate bearing currents, and hence Electro Discharge Machining (EDM) or bearing etching in the motor. Bearing currents caused by drives are also referred to as common-mode currents.

Since the common-mode filters mitigate high frequency, these filters absorb energy and contribute also to losses. Here, the trade-off is the advantage described compared with the losses.

More information on VLT® Common Mode Filters MCC 105 can be found on www.Danfoss.com.

dU/dt filters

At the IGBTs on the output switch, the voltage is not a clean sinus curve. It contains fast changes in voltage levels over a very short time. The use of dU/dt filters increases the raise time of the motor voltage to reduce the stress on the motor insulation. If not avoided, the problem will typically not show at once, but after some time, the insulation breaks and creates problems.

The switching frequency influences the losses in the dU/dt filters. These losses can be up to 1% of the rated power. Here, the trade-off is the possible damage of the motor over time compared with the cost of energy losses.

Danfoss offers the VLT® dU/dt Filter MCC 102 as a possible solution. Find more information on www.Danfoss.com.

Sine-wave filters

A more advanced, but also more costly solution, is using sine-wave filters.

The VLT® Sine-Wave Filter MCC 101 is a differential-mode low-pass filter that suppresses the switching frequency component coming from the drive and smoothes out the phase-to-phase voltage of the drive to become sinusoidal. This reduces the motor insulation stress and bearing currents. By supplying the motor with a sinusoidal voltage waveform, the switching acoustic noise from the motor is also eliminated.

For more detailed information, see the VLT® Sine-Wave Filter MCC 101 factsheet.

However, this type of filter also produces a voltage drop and there may be a reduction in the available control bandwidth. This can sometimes make it impossible to use this filter type. Again, as for the dU/dt filter, losses are linked to the switching frequency.

For more detailed information, see the VLT® Output Filters Design Guide.

4.2.7 Motor Cables and Motor

Motor cables

Motor cables introduce mainly ohmic losses: the longer the cables, the more resistance. In general, when correctly selected, the losses in cables shorter than 25 m (82 ft) can be neglected. In single-wire cables with individual shielding, current causes losses in the cable shielding. These losses can be neglected when using 3-wire cables.

Motor

There are many different types of motors that can be operated with a drive. The solution for dealing with losses in motors is therefore depending on the individual motor type and installation. In standard IEC 61800-9-2:2017 annex D, a discussion on motor load and losses is found.

A method to evaluate the losses generated in the motor operated with a drive can be found in the standards IEC 60034-2-1 and IEC TS 60034-2-4.

For the drive dealt with in this manual, find more information on supported motor types in 4.1.2 Supported Motor Types.

4.3 Functional Safety

4.4 Service Log

The service log is a data logger extension (alarm data saved in drive memory and exportable to VLT® Motion Control Tool MCT 10). If certain alarms occur, the system saves a detailed log in 5 s increments.

Service technicians can analyze this information to troubleshoot and optimize the drive.

The drive saves up to 24 service log records in the flash memory. If the RTC (real-time clock) has been set in the drive, all errors and log files are date- and time-stamped.

The relevant service log file can then be analyzed as a scope in MCT 10. Danfoss specifies the channels. All scope functions such as Auto-scale and Diagnostics can be used. The HEX ad binary value can be shown, which also helps with the analysis.

Table 3: Alarms Triggering a Service Log Record

Alarm	Alarm log data	Parameter number
1	Time of trip (1 of the values): • Priority RTC (if available). • Priority operating time (if RTC is not available).	*Parameter 0-89 Date and Time Readout* or *parameter 15-32 Fault Log: Time*
2	Alarm code	*Parameter 15-30 Fault Log: Error Code*
3	Frequency	*Parameter 16-13 Frequency*
4	Speed (RPM)	*Parameter 16-17 Speed [RPM]*
5	Reference %	*Parameter 16-02 Reference %*
7	DC-link voltage	*Parameter 16-30 DC Link Voltage*
9	Motor phase U current	*Parameter 16-45 Motor Phase U Current*
10	Motor phase V current	*Parameter 16-46 Motor Phase V Current*
11	Motor phase W current	*Parameter 16-47 Motor Phase W Current*
12	Motor phase voltage	*Parameter 16-12 Motor Current*
15	Control word	*Parameter 16-00 Control Word*
16	Status word	*Parameter 16-03 Status Word*

Application-dependent trips/alarms such as Safe Torque Off (STO), do not trigger a service log record.

Sampling rate

There are 2 periods with different sampling rates:

- Slow samples: 20 samples at a rate of 250 ms resulting in 5 s of history before the trip.
- Fast samples: 50 samples at a rate of 5 ms resulting in 250 ms of detailed history before the trip.

5 Product Features

5.1 Automated Operational Features

5.1.1 Automatic Energy Optimization

Automatic energy optimization (AEO) directs the drive to monitor the load on the motor continuously and adjust the output voltage to maximize efficiency. Under light load, the voltage is reduced and the motor current is minimized. The motor benefits from:

- Increased efficiency.
- Reduced heating.
- Quieter operation.

When using induction motors, the drive can optimize the energy efficiency of the motor in part load conditions by reducing the magnetization of the motor. This leads to reduced losses in the motor.

The updated AEO function features improved dynamics. This means that the AEO function can also be used in applications where a higher starting torque is required (for example, waste water pumps) or there are step load changes (such as conveyors). There is no need to select a V/Hz curve because the drive automatically adjusts motor voltage.

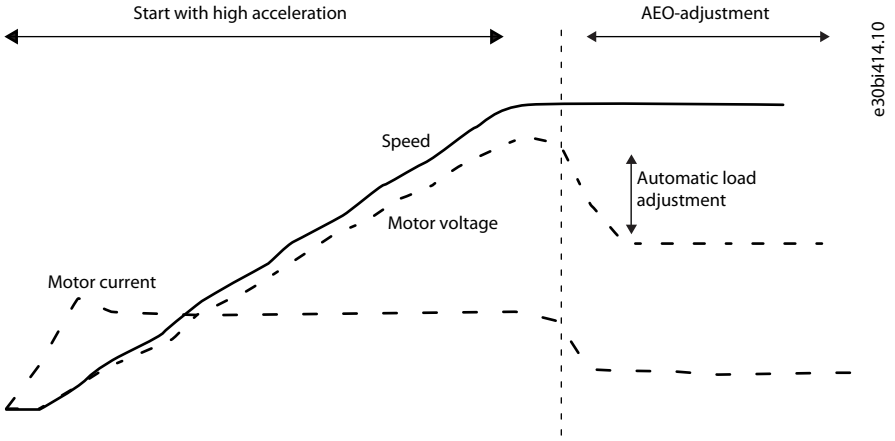

Illustration 10: Automatic Energy Optimization

The AEO requires correct advanced motor data meaning that a complete automatic motor adaptation (AMA) has to be run.

5.1.2 Short-circuit Protection

Motor (phase-to-phase)

The drive is protected against short circuits on the motor side by current measurements in each of the 3 motor phases. A short circuit between 2 output phases causes an overcurrent in the inverter. The inverter is turned off when the short-circuit current exceeds the allowed value (*Alarm 16, Trip Lock*).

Mains side

A drive that works correctly limits the current it can draw from the supply. Still, it is recommended to use fuses and/or circuit breakers on the supply side as protection if there is a component breakdown inside the drive (1st fault). Mains side fuses are mandatory for UL compliance.

N O T I C E

To ensure compliance with IEC 60364 for CE or NEC 2017 for UL, it is mandatory to use fuses and/or circuit breakers.

Brake resistor

The drive is protected from a short circuit in the brake resistor.

Load sharing

To protect the DC bus against short circuits and the drives from overload, install DC fuses in series with the load sharing terminals of all connected units.

5.1.3 Overvoltage Protection

Motor-generated overvoltage

The DC-link voltage is increased when the motor acts as a generator. This occurs in the following situations:

- The load drives the motor (at constant output frequency from the drive), that is, the load generates energy.
- During deceleration (ramp-down) if the moment inertia is high, the friction is low, and the ramp-down time is too short for the energy to be dissipated as a loss in the drive, the motor, and the installation.
- Incorrect slip compensation setting may cause higher DC-link voltage.
- Back EMF from PM motor operation. If coasted at high RPM, the PM motor back EMF may potentially exceed the maximum voltage tolerance of the drive and cause damage. To help prevent this, the value of *parameter 4-19 Max Output Frequency* is automatically limited based on an internal calculation. This calculation is based on the value of *parameter 1-40 Back EMF at 1000 RPM*, *parameter 1-25 Motor Nominal Speed*, and *parameter 1-39 Motor Poles*.

NOTICE

To avoid that the motor overspeeds (for example, due to excessive windmilling effects), equip the drive with a brake resistor.

The overvoltage can be handled either via using a brake function (*parameter 2-10 Brake Function*) and/or using overvoltage control (*parameter 2-17 Over-voltage Control*).

Brake functions

Connect a brake resistor to dissipate surplus brake energy. Connecting a brake resistor allows a higher DC-link voltage during braking. AC brake is an alternative to improve breaking without using a brake resistor. This function controls an overmagnetization of the motor when running regenerative, which can improve the OVC. Increasing the electrical losses in the motor allows the OVC function to increase the breaking torque without exceeding the overvoltage limit.

NOTICE

An AC brake is not as efficient as dynamic braking with a resistor and should not be used on frequently repeated braking applications as it may overheat the motor.

Overvoltage control (OVC)

OVC reduces the risk of the drive tripping due to an overvoltage on the DC link. This is managed by automatically extending the ramp-down time.

NOTICE

OVC can be activated for PM motors with control core, PM VVC$^+$, Flux open-loop control, and Flux closed-loop control.

NOTICE

LOSS OF HOIST CONTROL

Do not enable OVC in hoisting applications. If OVC is used with a hoist, the OVC will try to regulate the DC bus by spinning the motor faster, resulting in loss of hoisting control and/or damage to the hoist.

5.1.4 Missing Motor Phase Detection

The missing motor phase function (*parameter 4-58 Missing Motor Phase Function*) is enabled by default to avoid motor damage if a motor phase is missing. The default setting is 1000 ms, but it can be adjusted for a faster detection.

5.1.5 Mains Phase Imbalance Detection

Operation under severe mains imbalance conditions reduces the lifetime of the drive. Conditions are considered severe if the motor is operated continuously near nominal load. The default setting trips the drive if mains imbalance occurs (*parameter 14-12 Function at Mains Imbalance*).

5.1.6 Service Switch on the Output

Adding a service switch to the output between the motor and the drive is allowed. When *parameter 4-58 Missing Motor Phase Function* is set to *[5] Motor Check*, the drive automatically detects when the motor is disconnected. The drive then issues *Warning 3, No Motor* and resumes operation when the motor is connected again. Danfoss recommends not to use this feature for 525–690 V drives connected to an IT mains network.

5.1.7 Overload Protection

Torque limit

The torque limit feature protects the motor against overload, independent of the speed. Torque limit is controlled in *parameter 4-16 Torque Limit Motor Mode* and *parameter 4-17 Torque Limit Generator Mode*. The time before the torque limit warning trips is controlled in *parameter 14-25 Trip Delay at Torque Limit*.

Current limit

The current limit is controlled in *parameter 4-18 Current Limit*, and the time before the drive trips is controlled in *parameter 14-24 Trip Delay at Current Limit*.

Speed limit

Minimum speed limit: *Parameter 4-11 Motor Speed Low Limit [RPM]* or *parameter 4-12 Motor Speed Low Limit [Hz]* limit the minimum operating speed range of the drive. Maximum speed limit: *Parameter 4-13 Motor Speed High Limit [RPM]* or *parameter 4-19 Max Output Frequency* limit the maximum output speed the drive can provide.

Electronic thermal relay (ETR)

ETR is an electronic feature that simulates a bimetal relay based on internal measurements. See 5.2.1 Motor Thermal Protection.

Voltage limit

The inverter turns off to protect the transistors and the DC-link capacitors when a certain hard-coded voltage level is reached.

Overtemperature

The drive has built-in temperature sensors and reacts immediately to critical values via hard-coded limits.

5.1.8 Locked Rotor Protection

There can be situations when the rotor is locked due to excessive load or other factors. The locked rotor cannot produce enough cooling, which in turn can overheat the motor winding. The drive is able to detect the locked rotor situation with open-loop PM flux control and PM VVC+ control (*parameter 30-22 Locked Rotor Detection*).

5.1.9 Locked Rotor Protection

There can be situations when the rotor is locked due to excessive load or other factors. The locked rotor cannot produce enough cooling, which in turn can overheat the motor winding. The drive is able to detect the locked rotor situation with PM VVC+ control (*parameter 30-22 Locked Rotor Detection*).

5.1.10 Automatic Derating

The drive constantly checks for critical levels:

- Critical high temperature on the control card or heat sink.
- High motor load.
- High DC-link voltage.
- Low motor speed.

As a response to a critical level, the drive adjusts the switching frequency. For critical high internal temperatures and low motor speed, the drive can also force the PWM pattern to SFAVM.

N O T I C E

DERATING WITH SINE-WAVE FILTER

The automatic derating is different when *parameter 14-55 Output Filter* is set to *[2] Sine-Wave Filter Fixed*.

– Refer to the programming guide for more information.

5.1.10.1 Overview of Automatic Derating

The automatic derating is made up of contributions from separate functions that evaluate the need. Their interrelationship is shown in Illustration 12.

N O T I C E

In sine-wave filter fixed mode, the structure is different.

– See 5.1.10.2 Sine-wave Filter Fixed Mode.

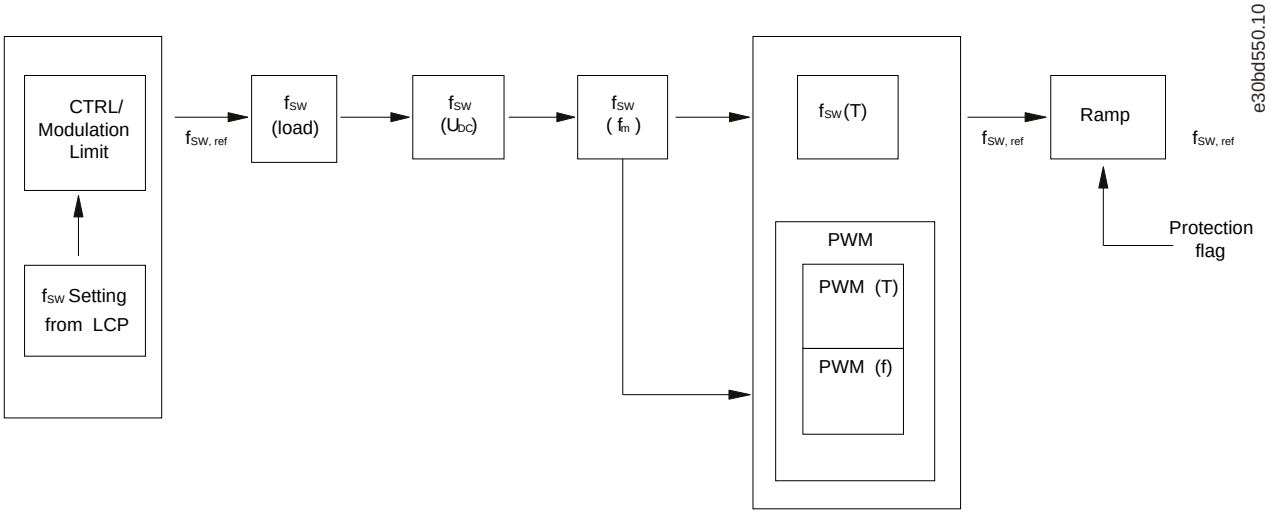

Illustration 11: Automatic Derating Function Block

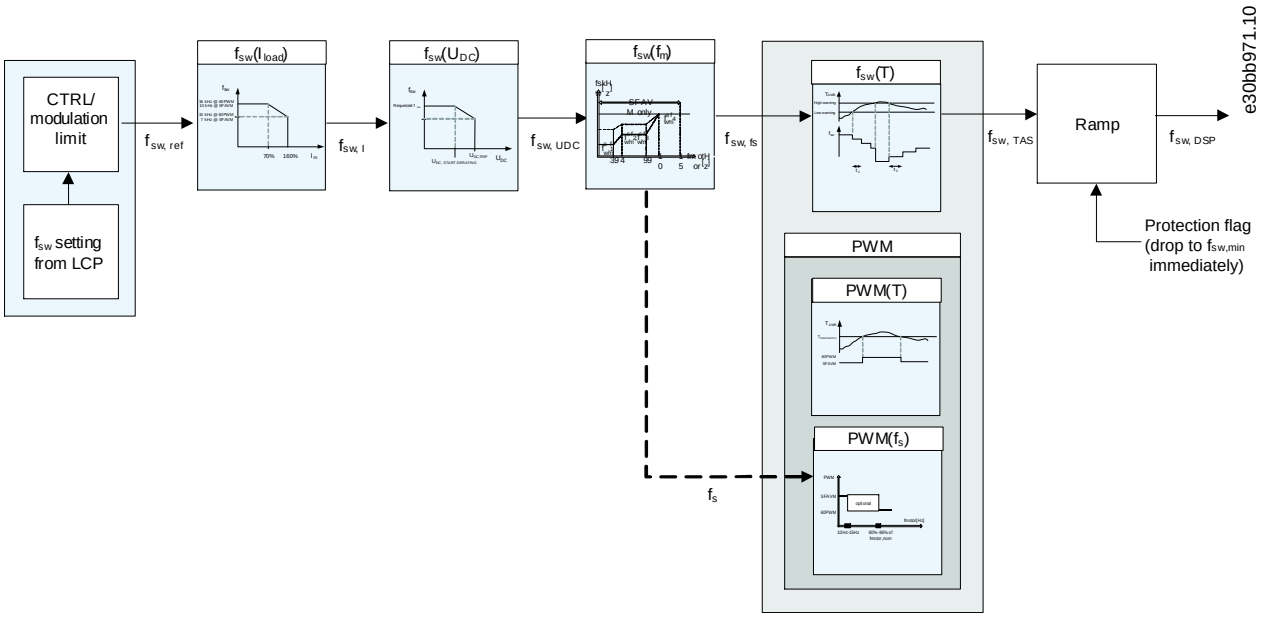

Illustration 12: Interrelationship Between the Automatic Derating Contributions

The switching frequency is first derated due to motor current, followed by DC-link voltage, motor frequency, and then temperature. If multiple deratings occur on the same iteration, the resulting switching frequency would be the same as though only the most significant derating occurred by itself (the deratings are not cumulative). Each of these functions is presented in the following sections.

5.1.10.2 Sine-wave Filter Fixed Mode

When using sine-wave filters, it is important to operate the filters within a safe range of switching frequencies. If the switching frequency is too low, the current through the filter rises, increasing the temperature with risk of damage to the filter.

During programming of the drive, it is possible to select an option for setting a minimum limit for the switching frequency. This fixed-mode function prevents the swithcing frequencies from being too low.

5.1.10.3 Overview Table

Table 4: Overview - Derating

Background for derating	PWM - Functions that adjust the switching pattern	f_{sw} – Functions that derate the switching frequency
I_{load} ↑	No automatic derating	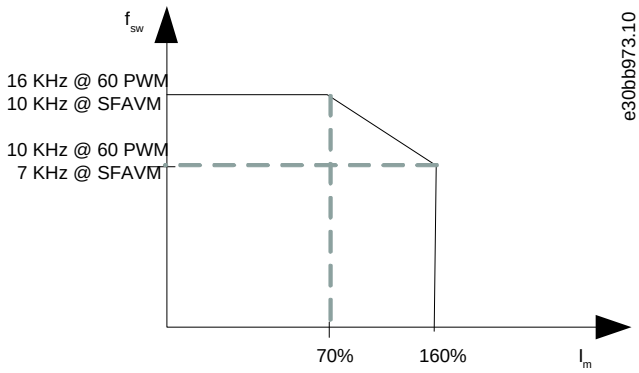
U_{dc} ↑	No automatic derating	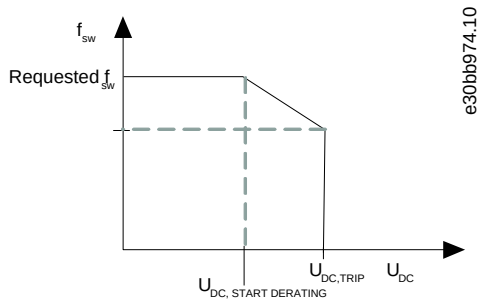
f_s	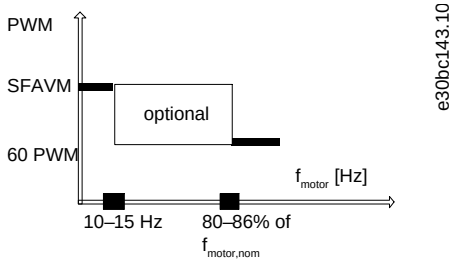	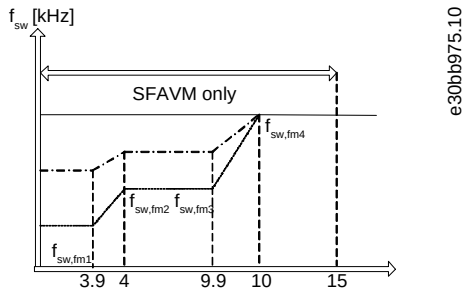
T ↑	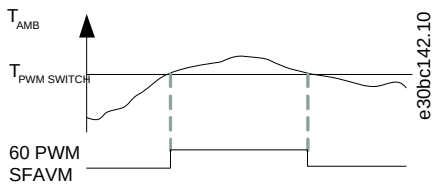	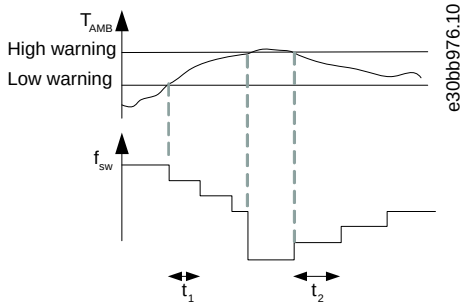

5.1.10.4 High Motor Load

The switching frequency is adjusted automatically according to the motor current. When a certain percentage of the nominal HO motor load is reached, the switching frequency is derated. This percentage is individual for each frame size and a value that is coded in the EEPROM along with the other points that limit the derating.

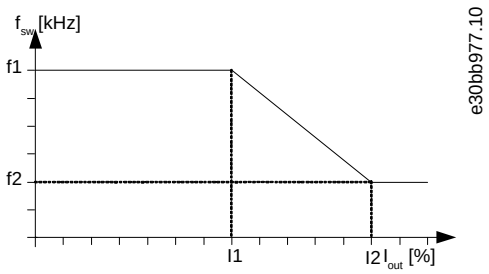

Illustration 13: Derating of Switching Frequency According to Motor Load. f1, f2, I1, and I2 are Coded in EEPROM.

In EEPROM, the limits depend on the modulation mode. In 60° AVM, f1 and f2 are higher than for SFAVM. I1 and I2 are independent of the modulation mode.

5.1.10.5 High Voltage on the DC link

The switching frequency is adjusted automatically according to the voltage on the DC link. When the DC link reaches a certain magnitude, the switching frequency is derated. The points that limit the derating are individual for each frame size and are coded in the EEPROM.

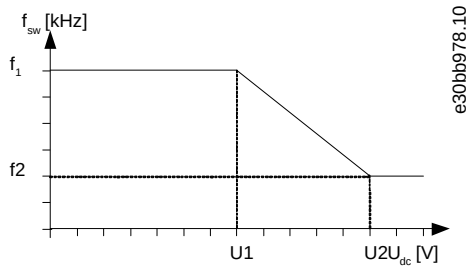

Illustration 14: Derating of Switching Frequency According to Voltage on the DC-link. f1, f2, U1, and U2 are Coded in EEPROM.

In EEPROM, the limits depend on the modulation mode. In 60° AVM, f1 and f2 are higher than for SFAVM. U1 and U2 are independent of the modulation mode.

5.1.10.6 Low Motor Speed

The selection of PWM strategy depends on the stator frequency. To prevent that the same IGBT is running for too long (thermal consideration), $f_{m,switch1}$ is specified as the minimum stator frequency for 60° PWM. $f_{m,switch2}$ is specified as the maximum stator frequency for SFAVM to protect the drive. 60° PWM helps to reduce the inverter loss above $f_{m,switch1}$ as the switch loss is reduced by 1/3 by changing from SFAVM to 60° AVM.

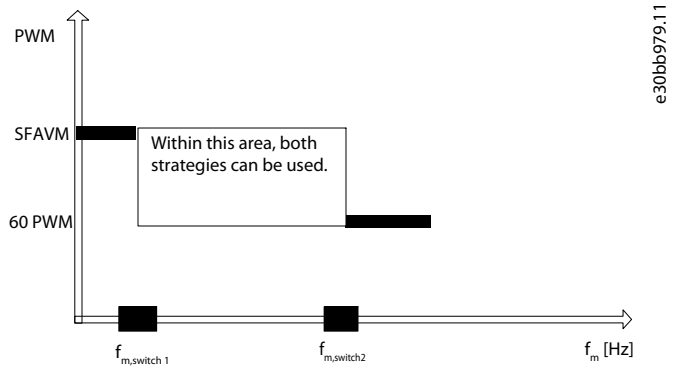

Illustration 15: Selection of PWM Strategy

The shape of the average temperature is constant regardless of the stator frequency. The peak temperature, however, follows the shape of the output power for small stator frequencies and goes towards the average temperature for increasing stator frequency. This results in higher temperature variations for small stator frequencies. This means that the expected lifetime of the component decreases for small stator frequencies if no compensation is used. Therefore, for low values of the stator frequency where the temperature variations are large, the switching frequency can be reduced to lower the peak temperature and thereby the temperature variations.

For VT applications, the load current is relatively small for small stator frequencies and the temperature variations are thus not as large as for the CT applications. For this reason, also the load current is considered.

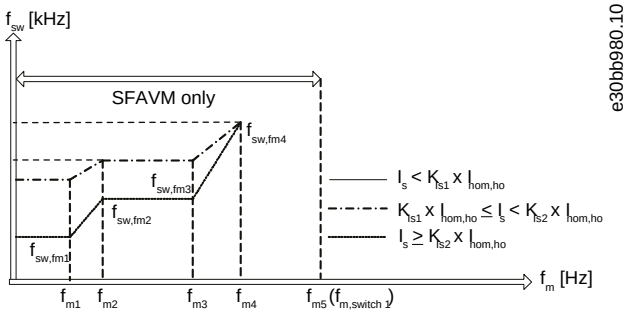

Illustration 16: Switching Frequency (f_{sw}) Variation for Different Stator Frequencies (fm)

The points that limit the derating are individual for each frame size and are coded in the EEPROM.

N O T I C E

The VLT® HVAC DriveFC 102 never derates the current automatically. Automatic derating refers to adaptation of the switching frequency and pattern.

For VT applications, the load current is considered before derating the switching frequency at low motor speed.

5.1.10.7 High Internal Temperature

The switching frequency is derated based on both control card- and heat sink temperature. This function may sometimes be referred to as the temperature-adaptive switching frequency function (TAS).

N O T I C E

In the example, 1 temperature affects the derating. In fact there are 2 limiting temperatures: control card temperature and heat sink temperature. Both have their own set of control temperatures.

- See Illustration 17.

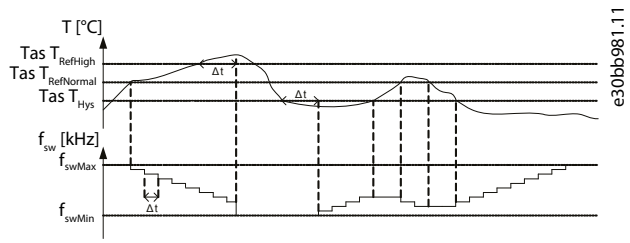

Illustration 17: Switching Frequency Derating due to High Temperature

N O T I C E

dt is 10 s when the control card is too hot but 0 s when the heat sink is too hot (more critical).

The high warning can only be violated for a certain time before the drive trips.

5.1.10.8 Current

Derate the output current at high temperatures. This calculation takes place after the calculations for derating the switching frequency. The result is an attempt to lower the temperatures by first lowering the switching frequency, and then lowering the output current. Current derating only takes place if the user has programmed the unit to derate in overtemperature situations. If trip function is selected for overtemperature situations, the current derate factor is not lowered.

5.1.11 Automatic Switching Frequency Modulation

The drive generates short electrical pulses to form an AC wave pattern. The switching frequency is the rate of these pulses. A low switching frequency (slow pulsing rate) causes audible noise in the motor, making a higher switching frequency preferable. A high switching frequency, however, generates heat in the drive that can limit the amount of current available to the motor.

Automatic switching frequency modulation regulates these conditions automatically to provide the highest switching frequency without overheating the drive. By providing a regulated high switching frequency, it quiets motor operating noise at slow speeds, when audible noise control is critical, and produces full output power to the motor when required.

5.1.12 Automatic Derating for High Switching Frequency

The drive is designed for continuous, full-load operation at switching frequencies between 1.5–2 kHz for 380–480 V, and 1–1.5 kHz for 525–690 V. The frequency range depends on power size and voltage rating. A switching frequency exceeding the maximum allowed range generates increased heat in the drive and requires the output current to be derated.

An automatic feature of the drive is load-dependent switching frequency control. This feature allows the motor to benefit from as high a switching frequency as the load allows.

5.1.13 Power Fluctuation Performance

The drive withstands mains fluctuations such as:

- Transients.
- Momentary dropouts.
- Short voltage drops.
- Surges.

The drive automatically compensates for input voltages ±10% from the nominal to provide full rated motor voltage and torque. With auto restart selected, the drive automatically powers up after a voltage trip. With flying start, the drive synchronizes to motor rotation before start.

5.1.14 Resonance Damping

Resonance damping eliminates the high-frequency motor resonance noise. Automatic or manually selected frequency damping is available.

5.1.15 Temperature-controlled Fans

Sensors in the drive regulate the operation of the internal cooling fans. Often, the cooling fans do not run during low load operation, or when in sleep mode or standby. These sensors reduce noise, increase efficiency, and extend the operating life of the fan.

5.1.16 EMC Compliance

Electromagnetic interference (EMI) and radio frequency interference (RFI) are disturbances that can affect an electrical circuit due to electromagnetic induction or radiation from an external source. The drive is designed to comply with the EMC product standard for drives IEC 61800-3 and the European standard EN 55011. Motor cables must be shielded and properly terminated to comply with the emission levels in EN 55011. For more information regarding EMC performance, see the EMC Test Results section.

5.1.17 Galvanic Isolation of Control Terminals

All control terminals and output relay terminals are galvanically isolated from mains power, which completely protects the controller circuitry from the input current. The output relay terminals require their own grounding. This isolation meets the stringent protective extra-low voltage (PELV) requirements for isolation.

The components that make up the galvanic isolation are:

- Supply, including signal isolation.
- Gate drive for the IGBTs, trigger transformers, and optocouplers.
- The output current Hall effect transducers.

5.2 Custom Application Features

Custom application functions are the most common features programmed in the drive for enhanced system performance. They require minimum programming or set-up. See the programming guide for instructions on activating these functions.

5.2.1 Motor Thermal Protection

Motor thermal protection can be provided via:

- Direct temperature sensing using a
  - PTC- or KTY sensor in the motor windings and connected on a standard AI or DI.
  - PT100 or PT1000 in the motor windings and motor bearings, connected on VLT® Sensor Input Card MCB 114 and VLT® Programmable I/O MCB 115.
  - PTC thermistor input on VLT® PTC Thermistor Card MCB 112 (ATEX-approved).
- Mechanical thermal switch (Klixon type) on a DI.
- Built-in electronic relay (ETR).

ETR calculates motor temperature by measuring current, frequency, and operating time. The drive shows the thermal load on the motor in percentage and can issue a warning at a programmable overload setpoint. Programmable options at the overload allow the drive to stop the motor, reduce output, or ignore the condition. Even at low speeds, the drive meets I2t Class 20 electronic motor overload standards.

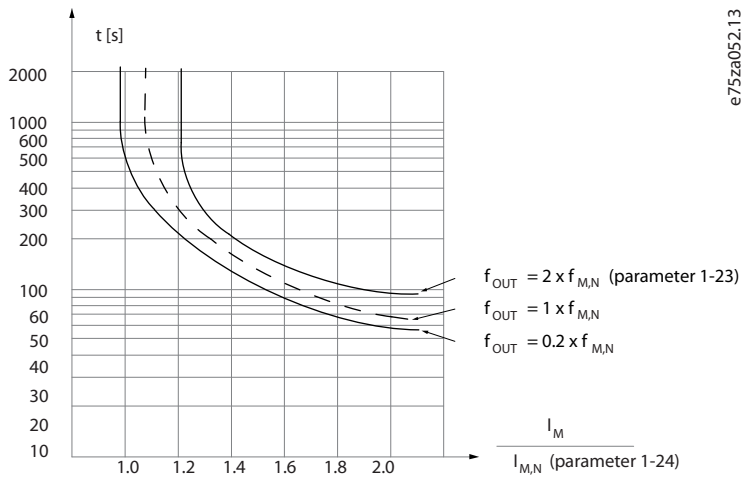

Illustration 18: ETR Characteristics

The X-axis shows the ratio between I_{motor} and I_{motor} nominal. The Y-axis shows the time in seconds before the ETR cuts off and trips the drive. The curves show the characteristic nominal speed at twice the nominal speed and at 0.2 x the nominal speed. At lower speed, the ETR cuts off at lower heat due to less cooling of the motor. In that way, the motor is protected from being overheated even at low speed. The ETR feature calculates the motor temperature based on actual current and speed. The calculated temperature is visible as a readout parameter in *parameter 16-18 Motor Thermal*. A special version of the ETR is also available for EX-e or EX-n motors in ATEX areas. This function makes it possible to enter a specific curve to protect the Ex-e motor. See the Programming Guide for setup instructions.

5.2.2 Built-in PID Controller

The 4 built-in proportional, integral, derivative (PID) controllers eliminate the need for auxiliary control devices.

One of the PID controllers maintains constant control of closed-loop systems where regulated flow, temperature, or other system requirements must be maintained. The drive can provide selfreliant control of the motor speed in response to feedback signals from remote sensors. The drive accommodates 2 feedback signals from 2 different devices. This feature allows regulating a system with different feedback requirements. The drive makes control decisions by comparing the 2 signals to optimize system performance.

Use the 3 extra and independent controllers for controlling other process equipment, such as chemical feed pumps, valve control, or for aeration with different levels.

5.2.3 Safe Torque Off

To run STO, extra wiring for the drive is required. Refer to the VLT® Safe Torque Off Operating Guide for further information.

Liability conditions

The customer is responsible for ensuring that personnel know how to install and operate the Safe Torque Off function by:

- Reading and understanding the safety regulations concerning health, safety, and accident prevention.
- Understanding the generic and safety guidelines provided in the VLT® Safe Torque Off Operating Guide.
- Having a good knowledge of the generic and safety standards for the specific application.

5.3 Load Sharing

Load sharing enables connection of multiple Danfoss VLT® drives over the same DC link with the following benefits:

- Energy savings:
  - A motor running in regenerative mode can supply drives that are running in motoring mode. Alternatively, the motor running in regenerative mode can supply any brake resistors used with the drives.
- Reduced need for spare parts:
  - Usually, only 1 brake resistor is required for the installation instead of a brake resistor for each drive.
- Power back-up:
  - If there was mains failure, all Danfoss VLT® drives can be supplied through the DC link from a backup. The application can thus continue running or go through a controlled shutdown process.

5.4 Regen Overview

Regen typically occurs in applications with continuous braking such as cranes/hoists, downhill conveyors, and centrifuges where energy is pulled out of a decelerated motor.

- The load drives the motor when the drive is operated at a constant output frequency. This is referred to as an overhauling load.
- During deceleration, if the inertia of the load is high and the deceleration time of the drive is set to a short value.

As standard, the drive cannot regenerate energy back to the input. The drive can use the internal brake chopper, which allows the excess energy to be dissipated in the form of heat within the external connected brake resistor.

Drives equipped with Active Front End (AFE) enables removal of excess energy using 1 of the following options:

- Brake chopper allows the excess energy to be dissipated in the form of heat within the brake resistor coils.
- Regen terminals allow a 3rd-party Regen to be connected to the drive, allowing the excess energy to be returned to the power grid.

Returning excess energy back to the power grid is the most efficient use of regenerated energy in applications using continuous braking.

N O T I C E

According to the EMC Directive, a system is defined as a combination of several types of equipment, finished products, and/or components combined, designed and/or put together by the same person (system manufacturer) intended to be placed on the market for distribution as a single functional unit for an end-user and intended to be installed and operated together to perform a specific task. The EMC directive applies to products/systems and installations, but in case the installation is built up of CE marked products/systems,Proofreading the installation can also be considered compliant with the EMC directive. Installations shall not be CE marked.

According to the EMC Directive, Danfoss Drives as a manufacturer of product/systems is responsible for obtaining the essential requirements of the EMC directive and attaching the CE mark. For systems involving load sharing and other DC terminals, Danfoss Drives can only ensure compliance to EMC Directive when end-users connect combinations of Danfoss Drives products as described in our technical documentation.

If any third-party products are connected to the load share or other DC terminals on the AC drives, Danfoss Drives cannot guarantee that the EMC requirements are fulfilled.

6 Options and Accessories Overview

6.1 Introduction

Danfoss offers an extensive range of options and accessories.

This chapter provides an overview of the different hardware options and accessories for the VLT® FC drive series:

- Fieldbus options
- Functional extensions
- Programmable controllers
- Power options
- Kits and accessories

6.2 VLT® Fieldbus Options

This topic gives an overview of currently available option cards related to fieldbus communication for the VLT® FC AC drive series. The fieldbus solutions brochure can be downloaded from www.danfoss.com in the Options and Accessories section.

Table 5: Fieldbus Options

Option name	Slot	FC 102	FC 103	FC 202	FC 301	FC 302
VLT® PROFIBUS DP MCA 101	A	x	x	x	x	x
VLT® DeviceNet MCA 104	A	x	–	x	x	x
VLT® CANopen MCA 105	A	–	–	–	x	x
VLT® AK-LonWorks MCA 107 for ADAP-Kool®	A	–	x	–	–	–
VLT® LonWorks MCA 108	A	x	–	–	–	–
VLT® BACNet MCA 109	A	x	x	–	–	–
VLT® PROFIBUS Converter MCA 113 (VLT® 3000 to VLT® FC 302)	A	–	–	–	–	x
VLT® PROFIBUS Converter MCA 114 (VLT® 5000 to VLT® FC 302)	A	–	–	–	–	x
VLT® PROFINET MCA 120	A	x	x	x	x	x
VLT® EtherNet/IP MCA 121	A	x	–	x	x	x
VLT® Modbus TCP MCA 122	A	x	x	x	x	x
VLT® POWERLINK MCA 123	A	–	–	–	x	x
VLT® EtherCAT MCA 124	A	–	–	–	x	x
VLT® BACNet/IP MCA 125	A	x	–	x	–	–
VLT® DeviceNet Converter MCA 194	A	–	–	–	–	x

6.3 VLT® Functional Extensions

This topic gives an overview of currently available option cards for functional extension.

More detailed descriptions of the functional extension option cards can be found in the Installation Guides, Programming Guides, and Operating Guides for the individual options. These manuals can be downloaded from www.danfoss.com in the section.

Table 6: Functional Extensions

Option name	Slot	FC 102	FC 103	FC 202	FC 301	FC 302
VLT® General Purpose I/O Option MCB 101	B	x	x	x	x	x
VLT® Encoder Option MCB 102	B	–	–	–	x	x
VLT® Resolver Input MCB 103	B	–	–	–	x	x
VLT® Relay Card MCB 105	B	x	x	x	x	x
VLT® 24 V DC Supply Option MCB 107	D	x	x	x	–	x
VLT® Safe PLC Interface Option MCB 108	B	–	–	–	–	x
VLT® Analog I/O MCB 109 (incl. RTC backup)	B	x	x	x	–	–
VLT® PTC Thermistor Card MCB 112	B	x	–	x	x	x
VLT® Extended Relay Card MCB 113	C	–	–	–	–	x
VLT® Sensor Input MCB 114	B	x	–	x	x	x
VLT® Programmable I/O MCB 115	B	x	x	x	x	x
VLT® Real-time Clock MCB 117	D	x	x	x	x	x
VLT® Safety Option MCB 150 (TTL)	B	–	–	–	–	x
VLT® Safety Option MCB 151 (HTL)	B	–	–	–	–	x
VLT® Safety Option MCB 152 (PROFIsafe)	B	–	–	–	–	x
VLT® Sensorless Safety MCB 159[1]	–	–	–	–	–	x

[1] MCB 159 is factory-mounted and must be ordered with VLT® Safety Option MCB 151.

6.4 VLT® Programmable Controllers

Table 7: VLT® Programmable Controllers

Option name		FC 102	FC 103	FC 202	FC 301	FC 302
VLT® Extended Cascade Controller MCO 101	B	–	–	x	–	–
VLT®Advanced Cascade Controller MCO 102	C	–	–	x	–	–
VLT®Motion Control Option MCO 305	C	–	–	–	x	x
VLT®Synchronizing Controller MCO 350	C	–	–	–	–	x
VLT®Position Controller MCO 351	C	–	–	–	–	x
Integrated Motion Controller IMC S067 (software option)	–	–	–	–	–	x

6.5 Kits and Accessories

6.5.1 IP21/UL Type 1 Enclosure Kits for VLT® FC Series Enclosure Sizes A, B, and C

IP20/IP4X top/UL Type 1 is an optional enclosure element available for IP20 compact units. If the enclosure kit is used, an IP20 unit is upgraded to comply with enclosure IP21/4X top/UL Type 1. The IP4X top can be applied to all standard IP20 enclosure variants.

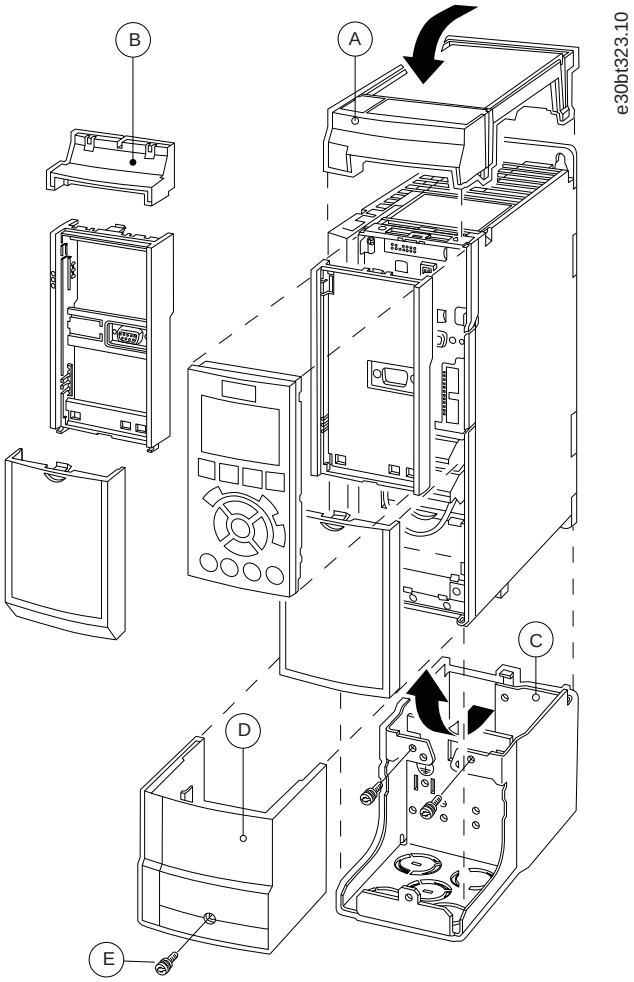

Illustration 19: IP21/UL Type 1 Kit on A2 Enclosure

A	Top cover	D	Base cover
B	Brim	E	Screw(s)
C	Base part		

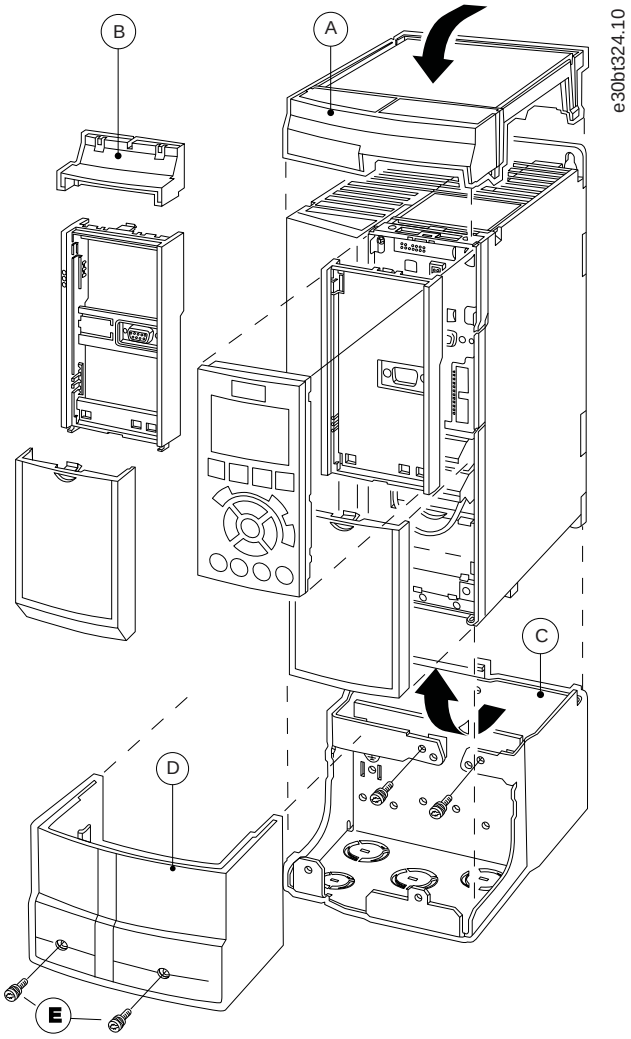

Illustration 20: IP21/UL Type 1 Kit on A3 Enclosure

A	Top cover	D	Base cover
B	Brim	E	Screw(s)
C	Base part		

Place the top cover as shown. If an A or B option is used, fit the brim to cover the top inlet. Place the base part C at the bottom of the drive and use the clamps from the accessory bag to fasten the cables correctly.

Holes for cable glands:

- Enclosure size A2: 2x M25 and 3xM32.
- Enclosure size A3: 3xM25 and 3xM32.

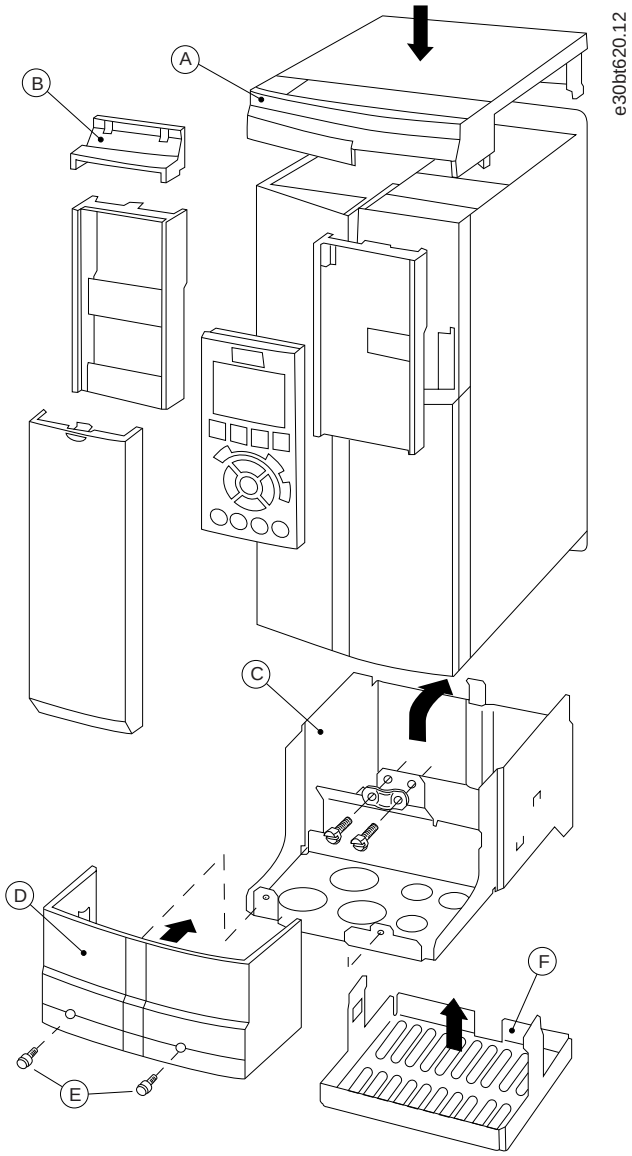

Illustration 21: IP21/UL Type 1 Kit on B3 Enclosure

A	Top cover	D	Base cover
B	Brim	E	Screw(s)
C	Base part	F	Fan cover

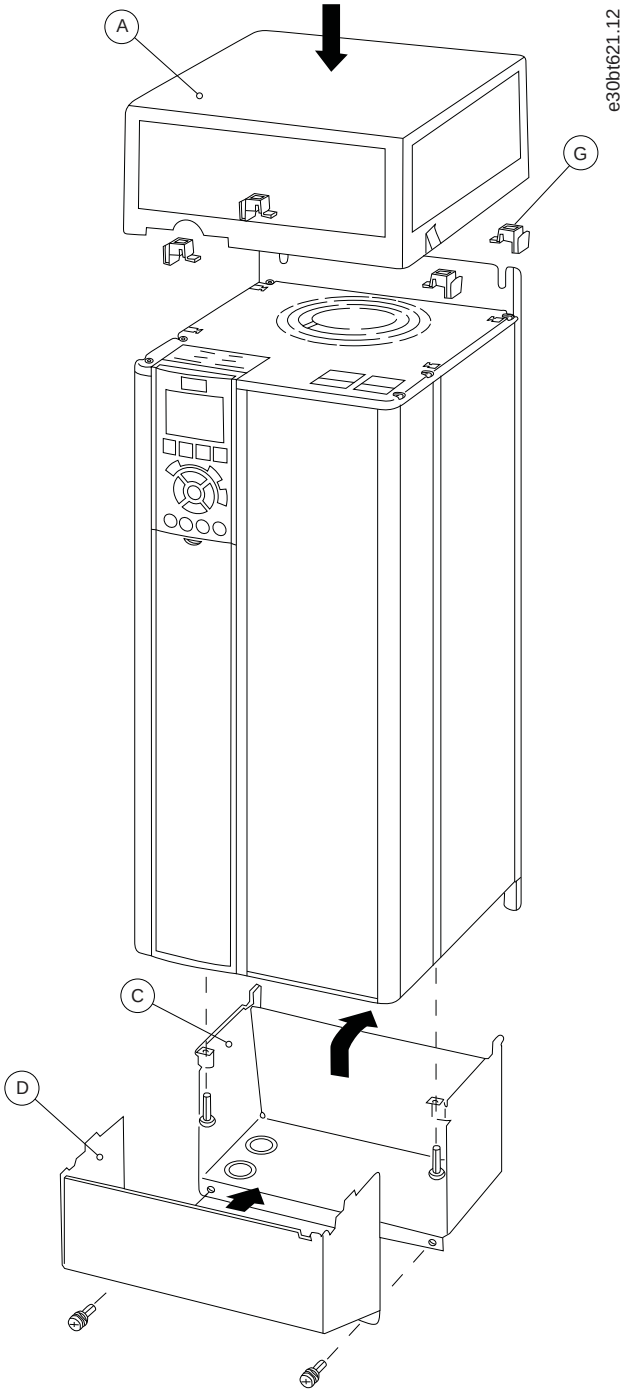

Illustration 22: IP21/UL Type 1 Kit on B4/C3/C4 Enclosure

A	Top cover	D	Base cover
C	Base part	G	Top clip

When option module A and/or option module B is/are used, fit the brim (B) to the top cover (A).

N O T I C E

Side-by-side installation is not possible when using the IP21/IP4X/UL Type 1 Enclosure Kit.

Table 8: Enclosure Dimensions with installed IP21/UL Type 1 Kit

Enclosure size	Height A [mm (in)]	Width B [mm (in)]	Depth C[1] [mm (in)]
A2	372 (14.6)	90 (3.5)	205 (8.1)
A3	372 (14.6)	130 (5.1)	205 (8.1)
B3	475 (18.7)	165 (6.5)	249 (9.8)
B4	670 (26.4)	255 (10.1)	246 (9.7)
C3	755 (29.7)	329 (13.0)	337 (13.3)
C4	950 (37.4)	391 (15.4)	337 (13.3)

[1] If an A and/or B option is used, the depth increases.

6.5.2 Mounting Brackets for VLT® FC Series Enclosure Sizes A5, B1, B2, C1, and C2

The kits contain an upper and a lower bracket for the respective enclosure size.

Table 9: Mounting Brackets, Dimensions

Enclosure size	Protection Rating	A [mm (in)]	B [mm (in)]
A5	IP55/66 (UL Type 12/4X)	480 (18.9)	495 (19.5)
B1	IP21/55/66 (UL Type 1/12/4X)	535 (21.1)	550 (21.7)
B2	IP21/55/66 (UL Type 1/12/4X)	705 (27.8)	720 (28.4)
C1	IP21/55/66 (UL Type 1/12/4X)	730 (28.7)	745 (29.3)
C2	IP21/55/66 (UL Type 1/12/4X)	820 (32.3)	835 (32.9)

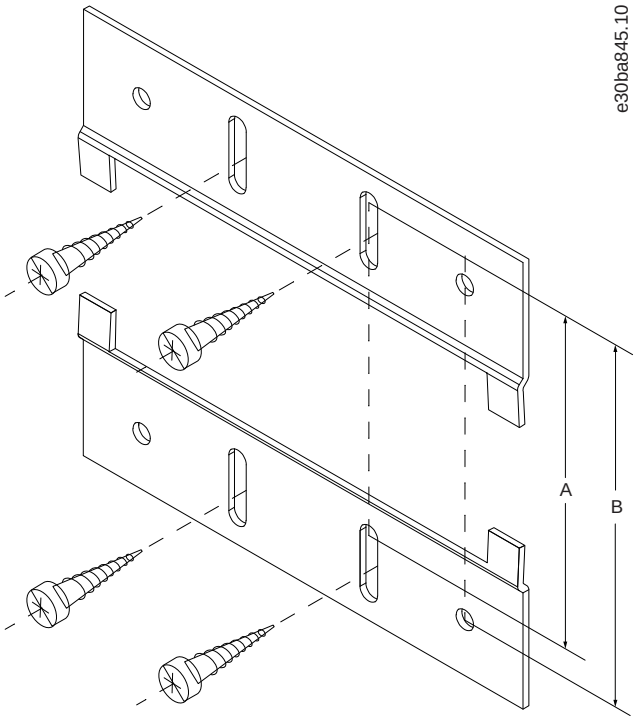

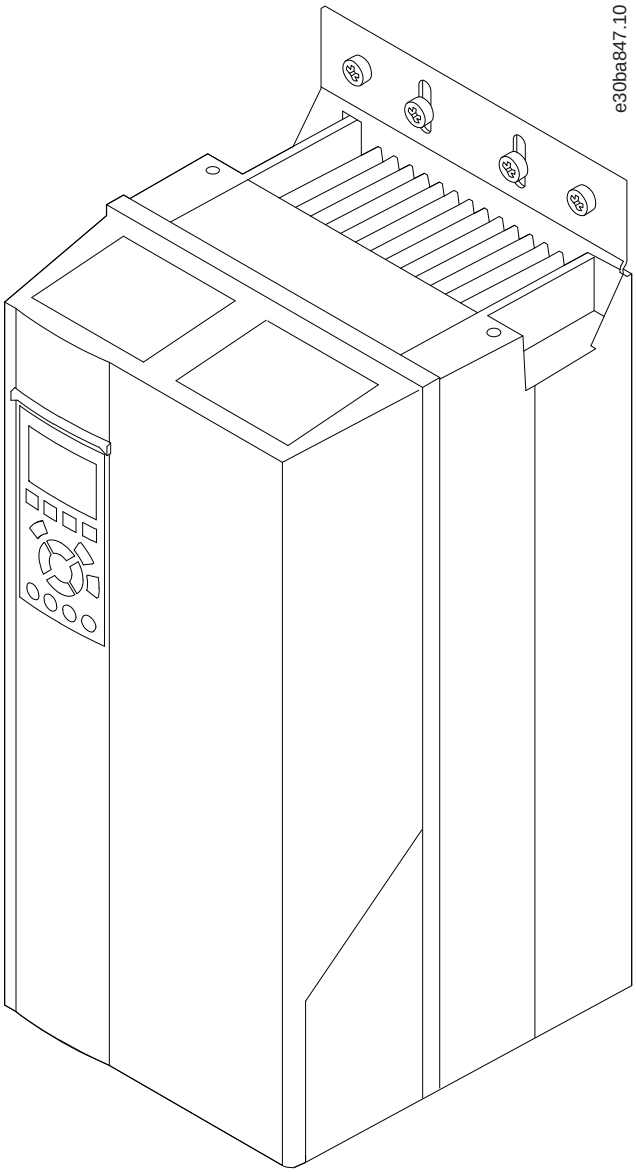

Illustration 23: Mounting Brackets for VLT® FC Series Enclosure Sizes A5, B1, B2, C2 and C2

6.5.3 Remote Mounting Kits for LCP

3 different remote mounting kits are available for the VLT® FC Series:

- Remote mounting kit for LCP with cover for outdoor mounting.
- Remote mounting kit with graphical LCP.
- Remote mounting kit with numerical LCP.

6.5.3.1 Remote Mounting Kit for LCP 102 and LCP 103 with Cover for Outdoor Mounting

The kit allows the LCP to be mounted apart from the drive, for example, in a wall or panel. The LCP mounting kit provides the following features:

- Simple mounting, only one 24 mm bore required for mounting.
- IP54 protection rating of the LCP mounting.
- Protecting LCP from direct sunlight.
- Possibility to lock the LCP cover to prevent unauthorized access.
- LCP cover locking in an open position, for example, for commissioning.
- Indicators for alarms and warnings are visible through the cover.
- Can be mounted on a wall from 10–90 mm (0.4–3.5 in) thickness.

The kit contains the following parts (see 12.2.6 Order Numbers for Local Control Panel Options):

- LCP cables with 2 M12 connectors (90° male connector and straight female connector).
- Cable to the LCP.
- Blind cover with M12 female connector.
- Base plate with D-sub connector and M12 male connector.
- Two gaskets and 1 nut for the D-sub connector.
- Intermediate cover with the front cover.
- Disassembly tool.

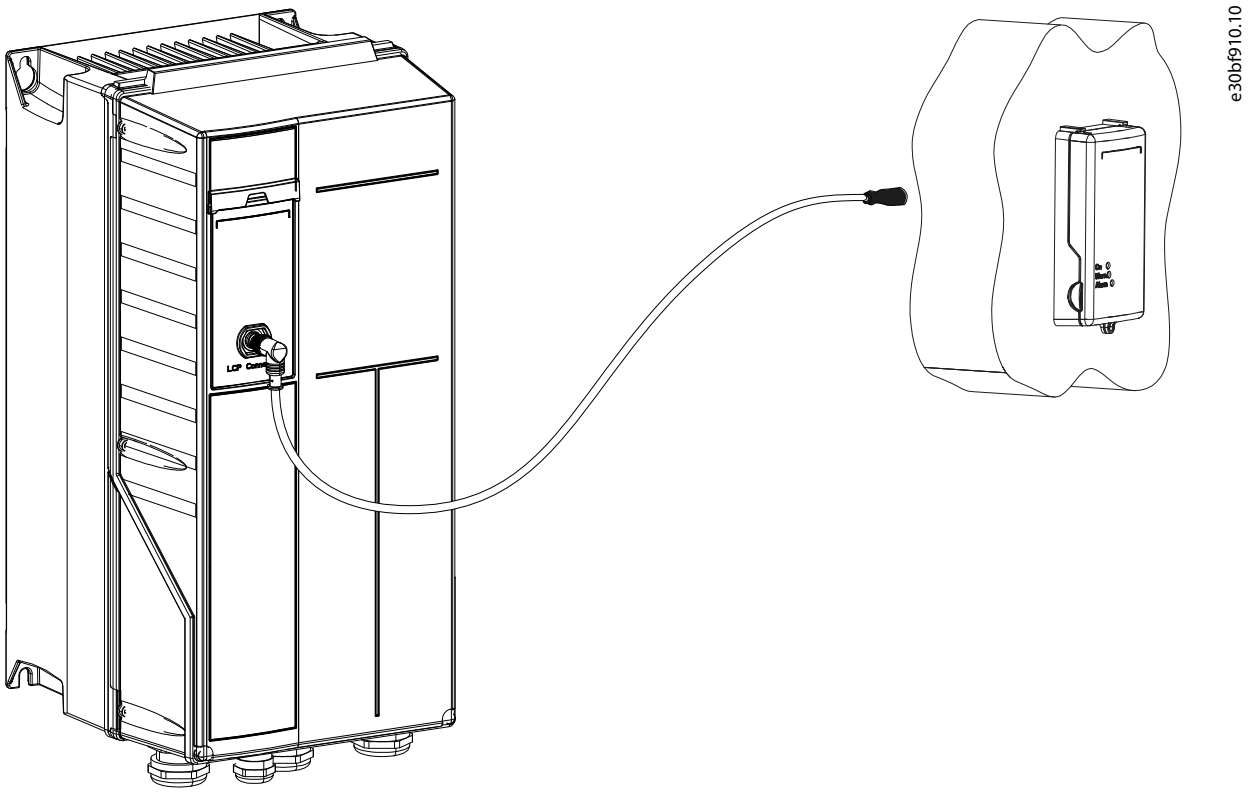

Illustration 24: Remote Connection of the LCP

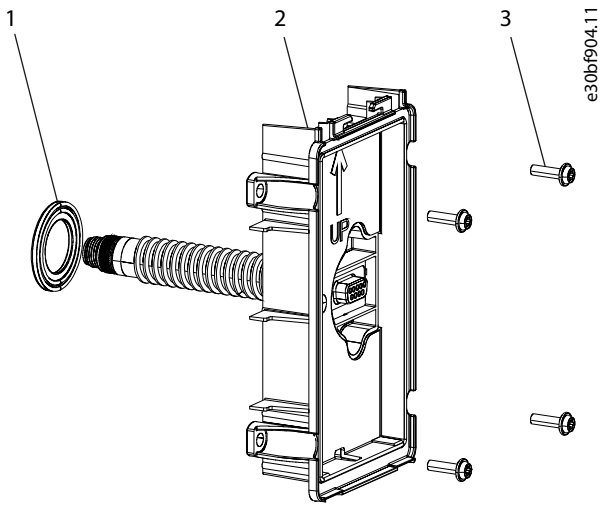

Illustration 25: Base Plate with Sub-D Connector

1	Gasket	3	Screws
2	Base plate		

6.5.3.2 Panel Mounting Kit for LCP 102, LCP 101, and LCP 103

The kit allows the LCP to move the LCP to the front of a cabinet.

The kit contains the following parts:

- Optional: Graphical LCP 102, numerical LCP 101, or Wireless Control Panel LCP 103.
- 3 m (10 ft) cable to the LCP.
- Gasket.
- Fasteners.

For order number, see: 12.2.6 Order Numbers for Local Control Panel Options.

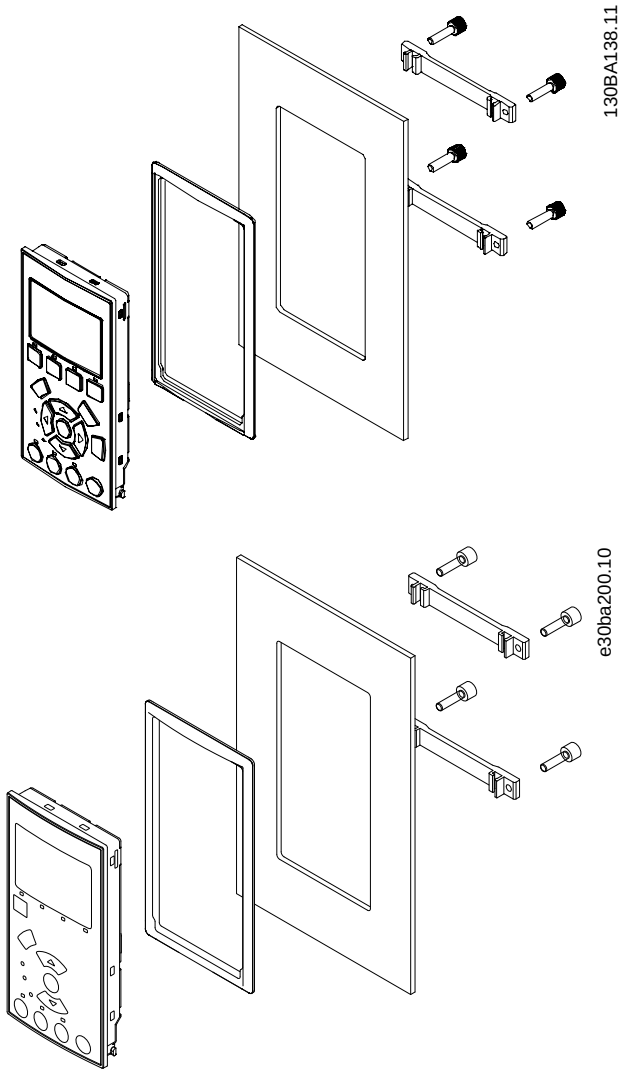

Illustration 26: Panel Mounting Kit for LCP 102, LCP 101, and LCP 103

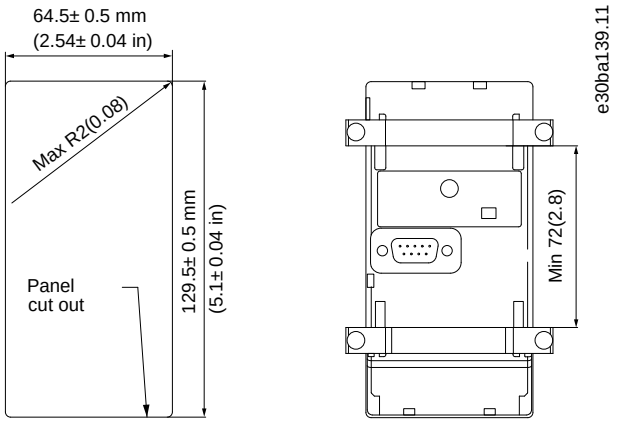

Illustration 27: Panel Mounting Kit Dimensions

6.5.4 VLT® Wireless Communication Panel LCP 103

The VLT® Wireless Communication Panel LCP 103 communicates with VLT® Motion Control Tool MCT 10 or MyDrive® Connect – an app which can be downloaded to iOS- and Android-based smart devices.

MyDrive® Connect offers full access to the drive making it easier to perform commissioning, operation, monitoring, and maintenance tasks. Utilizing the active point-to-point wireless connection, maintenance personnel can receive real-time error messages via the app to ensure a quick response to potential issues and reduce downtime.

The VLT® Wireless Communication Panel LCP 103 supports client mode, enabling multiple drives to connect with a common Wi-Fi point. This allows remote access to different AC drives (but only 1 at a time) via VLT® Motion Control Tool MCT 10 or via the MyDrive® Connect App when the smart device is connected on the same network.

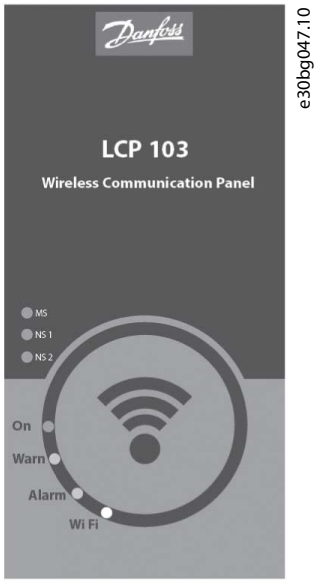

Illustration 28: VLT® Wireless Communication Panel LCP 103

7 Specifications

7.1 Electrical Data, 200–240 V and 3x115Y/200–139Y/240 V

Table 10: Mains Supply 3x200–240 V AC and 3x115Y/200–139Y/240 V AC, Normal Overload 110% for 1 minute, P1K1–P3K7

Type designation	P1K1	P1K5	P2K2	P3K0	P3K7
Typical shaft output [kW]	1.1	1.5	2.2	3.0	3.7
Typical shaft output at 208 V [hp]	1.5	2.0	2.9	4.0	4.9
IP20/UL Open Type[1]	A2	A2	A2	A3	A3
IP55/UL Type 12	A4/A5	A4/A5	A4/A5	A5	A5
IP66/UL Type 4X	A4/A5	A4/A5	A4/A5	A5	A5
Output current					
Continuous (3x200–240 V) [A]	6.6	7.5	10.6	12.5	16.7
Intermittent (3x200–240 V) [A]	7.3	8.3	11.7	13.8	18.4
Continuous kVA (208 V AC) [kVA]	2.38	2.70	3.82	4.50	6.0
Maximum input current					
Continuous (3x200–240 V) [A]	5.9	6.8	9.5	11.3	15
Intermittent (3x200–240 V) [A]	6.5	7.5	10.5	12.4	16.5
SCCR					
A2/A3 with mains disconnect [kA_{rms}]	50 kA	50 kA	50 kA	50 kA	50 kA
A4/A5 with mains disconnect [kA_{rms}]	65 kA	65 kA	65 kA	65 kA	65 kA
Without mains disconnect [kA_{rms}]	100 kA	100 kA	100 kA	100 kA	100 kA
Power losses and efficiency					
Estimated power loss at rated maximum load [W][2]	63	82	116	155	185
Efficiency[3]	0.96	0.96	0.96	0.96	0.96

[1] A2+A3 may be converted to IP21 using a conversion kit.

[2] The typical power loss is at normal load conditions and expected to be within ±15% (tolerance relates to variety in voltage and cable conditions). Values are based on a typical motor efficiency. Lower efficiency motors also add to the power loss in the drive and conversely. If the switching frequency is raised from nominal, the power losses may rise significantly. LCP and typical control card power consumptions are included. Further options and customer load may add up to 30 W to the losses. (Though typically only 4 W extra for a fully loaded control card or options for slot A or slot B, each). Although measurements are made with state-of-the-art equipment, some measurement inaccuracy must be allowed for (±5%).

[3] Measured using 5 m (16.4 ft) shielded motor cables at rated load and rated frequency.

Table 11: Mains Supply 3x200–240 V AC and 3x115Y/200–139Y/240 V AC, Normal Overload 110% for 1 minute, P5K5–P15K

Type designation	P5K5	P7K5	P11K	P15K
Typical shaft output [kW]	5.5	7.5	11	15
Typical shaft output at 208 V [hp]	7.5	10	15	20
IP20/UL Open Type[1]	B3	B3	B3	B4
IP21/UL Type 1	B1	B1	B1	B2

Type designation	P5K5	P7K5	P11K	P15K
IP55/UL Type 12	B1	B1	B1	B2
IP66/UL Type 4X	B1	B1	B1	B2
Output current				
Continuous (3x200–240 V) [A]	24.2	30.8	46.2	59.4
Intermittent (3x200–240 V) [A]	26.6	33.9	50.8	65.3
Continuous kVA (208 V AC) [kVA]	8.7	11.1	16.6	21.4
Maximum input current				
Continuous (3x200–240 V) [A]	22	28	42	54
Intermittent (3x200–240 V) [A]	24.2	30.8	46.2	59.4
SCCR				
With mains disconnect [kA_{rms}]	65 kA	65 kA	65 kA	10 kA
Without mains disconnect [kA_{rms}]	100 kA	100 kA	100 kA	100 kA
Power losses and efficiency				
Estimated power loss at rated maximum load [W][2]	269	310	447	602
Efficiency[3]	0.96	0.96	0.96	0.96

[1] B3+4 and C3+4 may be converted to IP21 using a conversion kit.

[2] The typical power loss is at normal load conditions and expected to be within ±15% (tolerance relates to variety in voltage and cable conditions). Values are based on a typical motor efficiency. Lower efficiency motors also add to the power loss in the drive and conversely. If the switching frequency is raised from nominal, the power losses may rise significantly. LCP and typical control card power consumptions are included. Further options and customer load may add up to 30 W to the losses. (Though typically only 4 W extra for a fully loaded control card or options for slot A or slot B, each). Although measurements are made with state-of-the-art equipment, some measurement inaccuracy must be allowed for (±5%).

[3] Measured using 5 m (16.4 ft) shielded motor cables at rated load and rated frequency.

Table 12: Mains Supply 3x200–240 V AC and 3x115Y/200–139Y/240 V AC, Normal Overload 110% for 1 minute, P18K–P45K

Type designation	P18K	P22K	P30K	P37K	P45K
Typical shaft output [kW]	18.5	22	30	37	45
Typical shaft output at 208 V [hp]	25	30	40	50	60
IP20/UL Open Type[1]	B4	C3	C3	C4	C4
IP21/UL Type 1	C1	C1	C1	C2	C2
IP55/UL Type 12	C1	C1	C1	C2	C2
IP66/UL Type 4X	C1	C1	C1	C2	C2
Output current					
Continuous (3x200–240 V) [A]	74.8	88	115	143	170
Intermittent (3x200–240 V) [A]	82.3	96.8	127	157	187
Continuous kVA (208 V AC) [kVA]	26.9	31.7	41.4	51.5	61.2
Maximum input current					

Type designation	P18K	P22K	P30K	P37K	P45K
Continuous (3x200–240 V) [A]	68	80	104	130	154
Intermittent (3x200–240 V) [A]	74.8	88	114	143	169
SCCR					
With mains disconnect [kA_{rms}]	65 kA	65 kA	10 kA	10 kA	10 kA
Without mains disconnect [kA_{rms}]	100 kA	100 kA	100 kA	100 kA	100 kA
Power losses and efficiency					
Estimated power loss at rated maximum load [W][2]	737	845	1140	1353	1636
Efficiency[3]	0.96	0.97	0.97	0.97	0.97

[1] B3+4 and C3+4 may be converted to IP21 using a conversion kit.

[2] The typical power loss is at normal load conditions and expected to be within ±15% (tolerance relates to variety in voltage and cable conditions). Values are based on a typical motor efficiency. Lower efficiency motors also add to the power loss in the drive and conversely. If the switching frequency is raised from nominal, the power losses may rise significantly. LCP and typical control card power consumptions are included. Further options and customer load may add up to 30 W to the losses. (Though typically only 4 W extra for a fully loaded control card or options for slot A or slot B, each). Although measurements are made with state-of-the-art equipment, some measurement inaccuracy must be allowed for (±5%).

[3] Measured using 5 m (16.4 ft) shielded motor cables at rated load and rated frequency.

7.2 Electrical Data, 380–480 V and 3x220Y/380–277Y/480 V

Table 13: Mains Supply 3x380–480 V AC and 3x220Y/380–277Y/480 V AC, Normal Overload 110% for 1 minute, P1K1–P7K5

Type designation	P1K1	P1K5	P2K2	P3K0	P4K0	P5K5	P5K5
Typical shaft output [kW]	1.1	1.5	2.2	3.0	4.0	5.5	7.5
Typical shaft output at 460 V [hp]	1.5	2.0	2.9	4.0	5.0	7.5	10
IP20/UL Open Type[1]	A2	A2	A2	A2	A2	A3	A3
IP55/UL Type 12	A4/A5	A4/A5	A4/A5	A4/A5	A4/A5	A5	A5
IP66/UL Type 4X	A4/A5	A4/A5	A4/A5	A4/A5	A4/A5	A5	A5
Output current							
Continuous (3x380–440 V) [A]	3	4.1	5.6	7.2	10	13	16
Intermittent (3x380–440 V) [A]	3.3	4.5	6.2	7.9	11	14.3	17.6
Continuous (3x441–480 V) [A]	2.7	3.4	4.8	6.3	8.2	11	14.5
Intermittent (3x441–480 V) [A]	3.0	3.7	5.3	6.9	9.0	12.1	15.4
Continuous kVA (400 V AC) [kVA]	2.1	2.8	3.9	5.0	6.9	9.0	11
Continuous kVA (460 V AC) [kVA]	2.4	2.7	3.8	5.0	6.5	8.8	11.6
Maximum input current							
Continuous (3x380–440 V) [A]	2.7	3.7	5.0	6.5	9.0	11.7	14.4
Intermittent (3x380–440 V) [A]	3.0	4.1	5.5	7.2	9.9	12.9	15.8
Continuous (3x441–480 V) [A]	2.7	3.1	4.3	5.7	7.4	9.9	13
Intermittent (3x441–480 V) [A]	3.0	3.4	4.7	6.3	8.1	10.9	14.3

Type designation	P1K1	P1K5	P2K2	P3K0	P4K0	P5K5	P5K5
SCCR							
A2/A3 with mains disconnect [kA_{rms}]	50 kA	50 kA	50 kA	50 kA	50 kA	50 kA	50 kA
A4/A5 with mains disconnect [kA_{rms}]	65 kA	65 kA	65 kA	65 kA	65 kA	65 kA	65 kA
Without mains disconnect [kA_{rms}]	100 kA	100 kA	100 kA	100 kA	100 kA	100 kA	100 kA
Power losses and efficiency							
Estimated power loss at rated maximum load [W][(2)]	58	62	88	116	124	187	255
Efficiency[(3)]	0.96	0.97	0.97	0.97	0.97	0.97	0.97

[1] A2+A3 may be converted to IP21 using a conversion kit.

[2] The typical power loss is at normal load conditions and expected to be within ±15% (tolerance relates to variety in voltage and cable conditions). Values are based on a typical motor efficiency. Lower efficiency motors also add to the power loss in the drive and vice versa. If the switching frequency is raised from nominal, the power losses may rise significantly. LCP and typical control card power consumptions are included. Further options and customer load may add up to 30 W to the losses. (Though typically only 4 W extra for a fully-loaded control card or options for slot A or slot B, each). Although measurements are made with state-of-the-art equipment, some measurement inaccuracy must be allowed for (±5%).

[3] Measured using 5 m (16.4 ft) shielded motor cables at rated load and rated frequency.

Table 14: Mains Supply 3x380–480 V AC and 3x220Y/380–277Y/480 V AC, Normal Overload 110% for 1 minute, P11K–P30K

Type designation	P11K	P15K	P18K	P22K	P30K
Typical shaft output [kW]	11	15	18.5	22	30
Typical shaft output at 460 V [hp]	15	20	25	30	40
IP20/UL Open Type[(1)]	B3	B3	B3	B4	B4
IP21/UL Type 1	B1	B1	B1	B2	B2
IP55/UL Type 12	B1	B1	B1	B2	B2
IP66/UL Type 4X	B1	B1	B1	B2	B2
Output current					
Continuous (3x380–439 V) [A]	24	32	37.5	44	61
Intermittent (3x380–439 V) [A]	26.4	35.2	41.3	48.4	67.1
Continuous (3x440–480 V) [A]	21	27	34	40	52
Intermittent (3x440–480 V) [A]	23.1	29.7	37.4	44	61.6
Continuous kVA (400 V AC) [kVA]	16.6	22.2	26	30.5	42.3
Continuous kVA (460 V AC) [kVA]	16.7	21.5	27.1	31.9	41.4
Maximum input current					
Continuous (3x380–439 V) [A]	22	29	34	40	55
Intermittent (3x380–439 V) [A]	24.2	31.9	37.4	44	60.5
Continuous (3x440–480 V) [A]	19	25	31	36	47
Intermittent (3x440–480 V) [A]	20.9	27.5	34.1	39.6	51.7
SCCR					

Type designation	P11K	P15K	P18K	P22K	P30K
With mains disconnect [kA_{rms}]	65 kA	65 kA	65 kA	65 kA	10 kA
Without mains disconnect [kA_{rms}]	100 kA	100 kA	100 kA	100 kA	100 kA
Power losses and efficiency					
Estimated power loss at rated maximum load [W][2]	278	392	465	525	698
Efficiency[3]	0.98	0.98	0.98	0.98	0.98

[1] B3+4 and C3+4 may be converted to IP21 using a conversion kit.

[2] The typical power loss is at normal load conditions and expected to be within ±15% (tolerance relates to variety in voltage and cable conditions). Values are based on a typical motor efficiency. Lower efficiency motors also add to the power loss in the drive and vice versa. If the switching frequency is raised from nominal, the power losses may rise significantly. LCP and typical control card power consumptions are included. Further options and customer load may add up to 30 W to the losses. (Though typically only 4 W extra for a fully-loaded control card or options for slot A or slot B, each). Although measurements are made with state-of-the-art equipment, some measurement inaccuracy must be allowed for (±5%).

[3] Measured using 5 m (16.4 ft) shielded motor cables at rated load and rated frequency.

Table 15: Mains Supply 3x380–480 V AC and 3x220Y/380–277Y/480 V AC, Normal Overload 110% for 1 minute, P37K–P90K

Type designation	P37K	P45K	P55K	P75K	P90K
Typical shaft output [kW]	37	45	55	75	90
Typical shaft output at 460 V [hp]	50	60	75	100	125
IP20/UL Open Type[1]	B4	C3	C3	C4	C4
IP21/UL Type 1	C1	C1	C1	C2	C2
IP55/UL Type 12	C1	C1	C1	C2	C2
IP66/UL Type 4X	C1	C1	C1	C2	C2
Output current					
Continuous (3x380–439 V) [A]	73	90	106	147	177
Intermittent (3x380–439 V) [A]	80.3	99	117	162	195
Continuous (3x440–480 V) [A]	65	80	105	130	160
Intermittent (3x440–480 V) [A]	71.5	88	116	143	176
Continuous kVA (400 V AC) [kVA]	50.6	62.4	73.4	102	123
Continuous kVA (460 V AC) [kVA]	51.8	63.7	83.7	104	128
Maximum input current					
Continuous (3x380–439 V) [A]	66	82	96	133	161
Intermittent (3x380–439 V) [A]	72.6	90.2	106	146	177
Continuous (3x440–480 V) [A]	59	73	95	118	145
Intermittent (3x440–480 V) [A]	64.9	80.3	105	130	160
SCCR					
With mains disconnect [kA_{rms}]	65 kA	65 kA	10 kA	65 kA	65 kA
Without mains disconnect [kA_{rms}]	100 kA	100 kA	100 kA	100 kA	100 kA

Type designation	P37K	P45K	P55K	P75K	P90K
Power losses and efficiency					
Estimated power loss at rated maximum load [W][2]	739	843	1083	1384	1474
Efficiency[3]	0.98	0.98	0.98	0.98	0.99

[1] B3+4 and C3+4 may be converted to IP21 using a conversion kit.

[2] The typical power loss is at normal load conditions and expected to be within ±15% (tolerance relates to variety in voltage and cable conditions). Values are based on a typical motor efficiency. Lower efficiency motors also add to the power loss in the drive and vice versa. If the switching frequency is raised from nominal, the power losses may rise significantly. LCP and typical control card power consumptions are included. Further options and customer load may add up to 30 W to the losses. (Though typically only 4 W extra for a fully-loaded control card or options for slot A or slot B, each). Although measurements are made with state-of-the-art equipment, some measurement inaccuracy must be allowed for (±5%).

[3] Measured using 5 m (16.4 ft) shielded motor cables at rated load and rated frequency.

7.3 Electrical Data, 525–600 V

Table 16: Mains Supply 3x525–600 V AC - Normal Overload 110% for 1 Minute, P1K1–P7K5

Type designation	P1K1	P1K5	P2K2	P3K0	P3K7	P4K0	P5K5	P7K5
Typical shaft output [kW]	1.1	1.5	2.2	3.0	3.7	4.0	5.5	7.5
IP20/UL Open Type	A3	A3	A3	A3	A2	A3	A3	A3
IP21/UL Type 1	A3	A3	A3	A3	A2	A3	A3	A3
IP55/UL Type 12	A5	A5	A5	A5	A5	A5	A5	A5
IP66/UL Type 4X	A5	A5	A5	A5	A5	A5	A5	A5
Output current								
Continuous (3x525–550 V) [A]	2.6	2.9	4.1	5.2	–	6.4	9.5	11.5
Intermittent (3x525–550 V) [A]	2.9	3.2	4.5	5.7	–	7.0	10.5	12.7
Continuous (3x525–600 V) [A]	2.4	2.7	3.9	4.9	–	6.1	9.0	11
Intermittent (3x525–600 V) [A]	2.6	3.0	4.3	5.4	–	6.7	9.9	12.1
Continuous kVA (525 V AC) [kVA]	2.5	2.8	3.9	5.0	–	6.1	9.0	11
Continuous kVA (575 V AC) [kVA]	2.4	2.7	3.9	4.9	–	6.1	9.0	11
Maximum input current								
Continuous (3x525–600 V) [A]	2.4	2.7	4.1	5.2	–	5.8	8.6	10.4
Intermittent (3x525–600 V) [A]	2.7	3.0	4.5	5.7	–	6.4	9.5	11.5
SCCR								
A2/A3 with mains disconnect [kA_{rms}]	50 kA	50 kA	50 kA	50 kA	50 kA	50 kA	50 kA	50 kA
A4/A5 with mains disconnect [kA_{rms}]	65 kA	65 kA	65 kA	65 kA	65 kA	65 kA	65 kA	65 kA
Without mains disconnect [kA_{rms}]	100 kA	100 kA	100 kA	100 kA	100 kA	100 kA	100 kA	100 kA

Type designation	P1K1	P1K5	P2K2	P3K0	P3K7	P4K0	P5K5	P7K5
Power losses and efficiency								
Estimated power loss at rated maximum load [W][1]	50	65	92	122	–	145	195	261
Efficiency[2]	0.97	0.97	0.97	0.97	–	0.97	0.97	0.97

[1] The typical power loss is at normal load conditions and expected to be within ±15% (tolerance relates to variety in voltage and cable conditions). Values are based on a typical motor efficiency. Lower efficiency motors also add to the power loss in the drive and conversely. If the switching frequency is raised from nominal, the power losses may rise significantly. LCP and typical control card power consumptions are included. Further options and customer load may add up to 30 W to the losses. (Though typically only 4 W extra for a fully loaded control card or options for slot A or slot B, each). Although measurements are made with state-of-the-art equipment, some measurement inaccuracy must be allowed for (±5%).

[2] Measured using 5m (16.4 ft) shielded motor cables at rated load and rated frequency

Table 17: Mains Supply 3x525–600 V AC - Normal Overload 110% for 1 Minute, P11K–P30K

Type designation	P11K	P15K	P18K	P22K	P30K
Typical shaft output [kW]	11	15	18.5	22	30
IP20/UL Open Type	B3	B3	B3	B4	B4
IP21/UL Type 1	B1	B1	B1	B2	B2
IP55/UL Type 12	B1	B1	B1	B2	B2
IP66/UL Type 4X	B1	B1	B1	B2	B2
Output current					
Continuous (3x525–550 V) [A]	19	23	28	36	43
Intermittent (3x525–550 V) [A]	21	25	31	40	47
Continuous (3x525–600 V) [A]	18	22	27	34	41
Intermittent (3x525–600 V) [A]	20	24	30	37	45
Continuous kVA (525 V AC) [kVA]	18.1	21.9	26.7	34.3	41
Continuous kVA (575 V AC) [kVA]	17.9	21.9	26.9	33.9	40.8
Maximum input current					
Continuous (3x525–600 V) [A]	17.2	20.9	25.4	32.7	39
Intermittent (3x525–600 V) [A]	19	23	28	36	43
SCCR					
With mains disconnect [kA_{rms}]	65 kA	65 kA	65 kA	65 kA	65 kA
Without mains disconnect [kA_{rms}]	100 kA	100 kA	100 kA	100 kA	100 kA

Type designation	P11K	P15K	P18K	P22K	P30K
Power losses and efficiency					
Estimated power loss at rated maximum load [W][1]	300	400	475	525	700
Efficiency[2]	0.97	0.97	0.97	0.97	0.97

[1] The typical power loss is at normal load conditions and expected to be within ±15% (tolerance relates to variety in voltage and cable conditions). Values are based on a typical motor efficiency. Lower efficiency motors also add to the power loss in the drive and conversely. If the switching frequency is raised from nominal, the power losses may rise significantly. LCP and typical control card power consumptions are included. Further options and customer load may add up to 30 W to the losses. (Though typically only 4 W extra for a fully loaded control card or options for slot A or slot B, each). Although measurements are made with state-of-the-art equipment, some measurement inaccuracy must be allowed for (±5%).

[2] Measured using 5m (16.4 ft) shielded motor cables at rated load and rated frequency

Table 18: Mains Supply 3x525–600 V AC - Normal Overload 110% for 1 Minute, P37K–P90K

Type designation	P37K	P45K	P55K	P75K	P90K
Typical shaft output [kW]	37	45	55	75	90
IP20/UL Open Type	B4	C3	C3	C4	C4
IP21/UL Type 1	C1	C1	C1	C2	C2
IP55/UL Type 12	C1	C1	C1	C2	C2
IP66/UL Type 4X	C1	C1	C1	C2	C2
Output current					
Continuous (3x525–550 V) [A]	54	65	87	105	137
Intermittent (3x525–550 V) [A]	59	72	96	116	151
Continuous (3x525–600 V) [A]	52	62	83	100	131
Intermittent (3x525–600 V) [A]	57	68	91	110	144
Continuous kVA (525 V AC) [kVA]	51.4	61.9	82.9	100	130.5
Continuous kVA (575 V AC) [kVA]	51.8	61.7	82.7	99.6	130.5
Maximum input current					
Continuous (3x525–600 V) [A]	49	59	78.9	95.3	124.3
Intermittent (3x525–600 V) [A]	54	65	87	105	137
SCCR					
With mains disconnect [kA_{rms}]	65 kA	65 kA	65 kA	65 kA	65 kA
Without mains disconnect [kA_{rms}]	100 kA	100 kA	100 kA	100 kA	100 kA

Type designation	P37K	P45K	P55K	P75K	P90K
Power losses and efficiency					
Estimated power loss at rated maximum load [W][1]	750	850	1100	1400	1500
Efficiency[2]	0.98	0.98	0.98	0.98	0.98

[1] The typical power loss is at normal load conditions and expected to be within ±15% (tolerance relates to variety in voltage and cable conditions). Values are based on a typical motor efficiency. Lower efficiency motors also add to the power loss in the drive and conversely. If the switching frequency is raised from nominal, the power losses may rise significantly. LCP and typical control card power consumptions are included. Further options and customer load may add up to 30 W to the losses. (Though typically only 4 W extra for a fully loaded control card or options for slot A or slot B, each). Although measurements are made with state-of-the-art equipment, some measurement inaccuracy must be allowed for (±5%).

[2] Measured using 5m (16.4 ft) shielded motor cables at rated load and rated frequency

7.4 Electrical Data, 525–690 V

Table 19: Mains Supply 3x525–690 V AC, Normal Overload 110% for 1 Minute, P1K1–P7K5

Type designation	P1K1	P1K5	P2K2	P3K0	P4K0	P5K5	P7K5
Typical shaft output [kW]	1.1	1.5	2.2	3.0	4.0	5.5	7.5
Enclosure IP20/(UL Open Type	A3	A3	A3	A3	A3	A3	A3
Output current							
Continuous (3x525–550 V) [A]	2.1	2.7	3.9	4.9	6.1	9.0	11
Intermittent (3x525–550 V) [A]	3.4	4.3	6.2	7.8	9.8	14.4	17.6
Continuous (3x551–690 V) [A]	1.6	2.2	3.2	4.5	5.5	7.5	10
Intermittent (3x551–690 V) [A]	2.6	3.5	5.1	7.2	8.8	12	16
Continuous kVA 525 V AC [kVA]	1.9	2.5	3.5	4.5	5.5	8.2	10
Continuous kVA 690 V AC [kVA]	1.9	2.6	3.8	5.4	6.6	9.0	12
Maximum input current							
Continuous (3x525–550 V) [A]	1.9	2.4	3.5	4.4	5.5	8.0	10
Intermittent (3x52–550 V) [A]	3.0	3.9	5.6	7.1	8.8	13	16
Continuous (3x551–690 V) [A]	1.4	2.0	2.9	4.0	4.9	6.7	9.0
Intermittent (3x551–690 V) [A]	2.3	3.2	4.6	6.5	7.9	10.8	14.4
SCCR							
A2/A3 with mains disconnect [kA_{rms}]	50 kA	50 kA	50 kA	50 kA	50 kA	50 kA	50 kA
A4/A5 with mains disconnect [kA_{rms}]	65 kA	65 kA	65 kA	65 kA	65 kA	65 kA	65 kA
Without mains disconnect [kA_{rms}]	100 kA	100 kA	100 kA	100 kA	100 kA	100 kA	100 kA

Type designation	P1K1	P1K5	P2K2	P3K0	P4K0	P5K5	P7K5
Power losses and efficiency							
Estimated power loss at rated maximum load [W][1]	44	60	88	120	160	220	300
Efficiency[2]	0.98	0.98	0.98	0.98	0.98	0.98	0.98

[1] The typical power loss is at normal load conditions and expected to be within ±15% (tolerance relates to variety in voltage and cable conditions). Values are based on a typical motor efficiency. Lower efficiency motors also add to the power loss in the drive and conversely. If the switching frequency is raised from nominal, the power losses may rise significantly. LCP and typical control card power consumptions are included. Further options and customer load may add up to 30 W to the losses. (Though typically only 4 W extra for a fully loaded control card or options for slot A or slot B, each). Although measurements are made with state-of-the-art equipment, some measurement inaccuracy must be allowed for (±5%).

[2] Measured using 5 m (16.4 ft) shielded motor cables at rated load and rated frequency.

Table 20: Mains Supply 3x525–690 V AC, Normal Overload 110% for 1 Minute, P11K–P30K

Type designation	P11K	P15K	P18K	P22K	P30K
High/normal load	NO	NO	NO	NO	NO
Typical shaft output at 550 V [kW]	7.5	11	15	18.5	22
Typical shaft output at 690 V [kW]	11	15	18.5	22	30
IP20/UL Open Type	B4	B4	B4	B4	B4
IP21/UL Type 1	B2	B2	B2	B2	B2
IP55/UL Type 12	B2	B2	B2	B2	B2
Output current					
Continuous (3x525–550 V) [A]	14	19	23	28	36
Intermittent (60 s overload) (3x525–550 V) [A]	22.4	20.9	25.3	30.8	39.6
Continuous (3x551–690 V) [A]	13	18	22	27	34
Intermittent (60 s overload) (3x551–690 V) [A]	20.8	19.8	24.2	29.7	37.4
Continuous kVA (550 V AC) [kVA]	13.3	18.1	21.9	26.7	34.3
Continuous kVA (690 V AC) [kVA]	15.5	21.5	26.3	32.3	40.6
Maximum input current					
Continuous (at 550 V) [A]	15	19.5	24	29	36
Intermittent (60 s overload) (at 550 V) [A]	23.2	21.5	26.4	31.9	39.6
Continuous (at 690 V) [A]	14.5	19.5	24	29	36
Intermittent (60 s overload) (at 690 V) [A]	23.2	21.5	26.4	31.9	39.6
Maximum pre-fuses[1] [A]					
SCCR					
With mains disconnect [kA_{rms}]	65 kA	65 kA	65 kA	65 kA	65 kA
Without mains disconnect [kA_{rms}]	100 kA	100 kA	100 kA	100 kA	100 kA

Type designation	P11K	P15K	P18K	P22K	P30K
Power losses and efficiency					
Estimated power loss at rated maximum load [W][1]	150	220	300	370	440
Efficiency[2]	0.98	0.98	0.98	0.98	0.98

[1] For type of fuse see 9.5.2 CE Compliance and the *Fuses and Circuit Breakers section*.

The typical power loss is at normal load conditions and expected to be within ±15% (tolerance relates to variety in voltage and cable conditions). Values are based on a typical motor efficiency. Lower efficiency motors also add to the power loss in the drive and conversely. If the switching frequency is raised from nominal, the power losses may rise significantly. LCP and typical control card power consumptions are included. Further options and customer load may add up to 30 W to the losses. (Though typically only 4 W extra for a fully loaded control card or options for slot A or slot B, each). Although measurements are made with state-of-the-art equipment, some measurement inaccuracy must be allowed for (±5%).

[2] Measured using 5 m (16.4 ft) shielded motor cables at rated load and rated frequency.

Table 21: Mains Supply 3x525–690 V AC, Normal Overload 110% for 1 Minute, P37K–P90K

Type designation	P37K	P45K	P55K	P75K	P90K
High/normal load	NO	NO	NO	NO	NO
Typical shaft output at 550 V [kW]	30	37	45	55	75
Typical shaft output at 690 V [kW]	37	45	55	75	90
IP20/UL Open Type	B4	C3	C3	D3h	D3h
IP21/UL Type 1	C2	C2	C2	C2	C2
IP55/UL Type 12	C2	C2	C2	C2	C2
Output current					
Continuous (3x525–550 V) [A]	43	54	65	87	105
Intermittent (60 s overload) (3x525–550 V) [A]	47.3	59.4	71.5	95.7	115.5
Continuous (3x551-690 V) [A]	41	52	62	83	100
Intermittent (60 s overload) (3x551–690 V) [A]	45.1	57.2	68.2	91.3	110
Continuous kVA (550 V AC) [kVA]	41	51.4	61.9	82.9	100
Continuous kVA (690 V AC) [kVA]	49	62.1	74.1	99.2	119.5
Maximum input current					
Continuous (at 550 V) [A]	49	59	71	87	99
Intermittent (60 s overload) (at 550 V) [A]	53.9	64.9	78.1	95.7	108.9
Continuous (at 690 V) [A]	48	58	70	86	94.3
Intermittent (60 s overload) (at 690 V) [A]	52.8	63.8	77	94.6	112.7
Maximum pre-fuses[1] [A]	125	160	160	–	
SCCR					
With mains disconnect [kA_{rms}]	65 kA	65 kA	65 kA	65 kA	65 kA
Without mains disconnect [kA_{rms}]	100 kA	100 kA	100 kA	100 kA	100 kA

Type designation	P37K	P45K	P55K	P75K	P90K
Power losses and efficiency					
Estimated power loss at rated maximum load [W][2]	740	900	1100	1500	1800
Efficiency[2]	0.98	0.98	0.98	0.98	0.98

[1] For type of fuse see 9.5.2 CE Compliance and the *Fuses and Circuit Breakers section*.

[2] The typical power loss is at normal load conditions and expected to be within ±15% (tolerance relates to variety in voltage and cable conditions). Values are based on a typical motor efficiency. Lower efficiency motors also add to the power loss in the drive and conversely. If the switching frequency is raised from nominal, the power losses may rise significantly. LCP and typical control card power consumptions are included. Further options and customer load may add up to 30 W to the losses. (Though typically only 4 W extra for a fully loaded control card or options for slot A or slot B, each). Although measurements are made with state-of-the-art equipment, some measurement inaccuracy must be allowed for (±5%).

7.5 Mains Supply

Supply terminals	L1, L2, L3
Supply voltage[1][2][3]	200–240 V ±10%
Supply voltage[1][2][4]	380–480 V/500–600 V ±10%
Supply voltage[1][2]	525–600 V ±10%
Supply frequency	47.5–63 Hz
Maximum imbalance temporary between mains phases	3.0% of rated supply voltage
True power factor (λ)	≥0.9 nominal at rated load
Displacement power factor (cos Φ)	Near unity (>0.98)
Switching on the input supply L1, L2, L3 (power-ups) ≤7.5 kW	Maximum 2 times per minute
Switching on input supply L1, L2, L3 (power-ups) 11–90 kW	Maximum 1 time per minute
Environment according to EN60664-1	Overvoltage category III/pollution degree 2

[1] Mains voltage low/mains dropout: During low mains voltage or a mains dropout, the drive continues until the DC-link voltage drops below the minimum stop level, which corresponds typically to 15% below the drive's lowest rated supply voltage. Power-up and full torque cannot be expected at mains voltage lower than 10% below the drive's lowest rated supply voltage.

[2] The unit is suitable for use on a circuit capable of delivering not more than 100000 RMS symmetrical Amperes, 240/500/600/690 V maximum, depending upon drive power and voltage rating.

[3] If type code position 23 = 6: UL 61800-5-1, the supply voltage is 3x115Y/200–139Y/240 V.

[4] If type code position 23 = 6: UL 61800-5-1, the supply voltage is 3x220Y/380–277Y/480 V.

7.6 Motor Output and Motor Data

7.6.1 Motor Output (U, V, W)

Output voltage	0–100% of supply voltage
Output frequency (1.1–90 kW)	0–590 Hz[1]
Switching on output	Unlimited
Ramp times	1–3600 s

[1] From software version 3.92 the output frequency of the frequency converter is limited to 590 Hz. Contact local Danfoss partner for further information.

7.6.2 Torque Characteristics

Starting torque (constant torque)	Maximum 110% for 60 s[1]
Starting torque	Maximum 135% up to 0.5 s[1]
Overload torque (constant torque)	Maximum 110% for 60 s[1]
Starting torque (variable torque)	Maximum 110% for 60 s[1]
Overload torque (variable torque)	Maximum 110% for 60 s

Torque rise time in VVC+ (independent of f_{sw})	10 ms[2]

[1] Percentage relates to the nominal torque.

[2] The torque response time depends on application and load but as a rule, the torque step from 0 to reference is 4-5 x torque rise time.

7.7 Ambient Conditions

Enclosure	IP20/Chassis, IP20/Chassis, IP21/Type 1, IP54/Type 12, IP55/Type 12, IP66/Type 4X
Vibration test	1.0 g
Maximum relative humidity	5–93 (IEC 721-3-3); Class 3K3 (non-condensing) during operation
Aggressive environment (IEC 60068-2-43) H_2S test	Class Kd
Ambient temperature	Maximum 50 °C (122 °F) (24-hour average maximum 45 °C (113 °F))[1]
Minimum ambient temperature during full-scale operation	0 °C (32 °F)
Minimum ambient temperature at reduced speed performance	-10 °C (14 °F)
Temperature during storage/transport	-25 to +65/70 °C (-13 to +149/158 °F)
Maximum altitude above sea level without derating	1000 m (3280 ft)
EMC standards, Emission	EN 61800-3
EMC standards, Immunity	EN 61800-3
Energy efficiency class	IE2[2]

[1] See the chapter *Derating* for:

- Derating for high ambient temperature.
- Derating for high altitude.

[2] Determined according to EN 50598-2 at:

- Rated load.
- 90% rated frequency.
- Switching frequency factory setting.
- Switching pattern factory setting.

7.8 Cable Specifications

7.8.1 Motor Cable Length

Maximum motor cable length, shielded	150 m (492 ft)
Maximum motor cable length, unshielded	300 m (984 ft)

7.8.2 Power Cable Cross-sections

Table 22: Maximum Cable Cross-section [mm^2 (AWG)]

Enclosure	Mains	Motor	Brake	Loadshare	Disconnect
A1	4(12)	4(12)	4(12)	4(12)	4(12)
A2	4(12)	4(12)	4(12)	4(12)	4(12)
A3	4(12)	4(12)	4(12)	4(12)	4(12)
A4	4(12)	4(12)	4(12)	4(12)	4(12)
A5	4(12)	4(12)	4(12)	4(12)	4(12)
B1	10(7)	10(7)	10(7)	10(7)	10(7)

Enclosure	Mains	Motor	Brake	Loadshare	Disconnect
B2	35(2)	35(2)	35(2)	35(2)	35(2)
B3	10(7)	10(7)	10(7)	10(7)	10(7)
B4	35(2)	35(2)	35(2)	35(2)	35(2)
C1	50(1/0)	50(1/0)	50(1/0)	50(1/0)	50(1/0)
C2	95(4/0)	95(4/0)	95(4/0)	95(4/0)	95(4/0)
C3	50(1/0)	50(1/0)	50(1/0)	50(1/0)	50(1/0)
C4	95(4/0)	95(4/0)	95(4/0)	95(4/0)	95(4/0)

7.8.3 Control Cable Cross-sections

Maximum cross-section to control terminals, flexible/rigid wire without cable end sleeves	1.5 mm^2/16 AWG
Maximum cross-section to control terminals, flexible wire with cable end sleeves	1 mm^2/18 AWG
Maximum cross-section to control terminals, flexible wire with cable end sleeves with collar	0.5 mm^2/20 AWG
Minimum cross-section to control terminals	0.25 mm^2/24 AWG

7.9 Control Input/Output and Control Data

7.9.1 Digital Inputs

Programmable digital inputs[1]	4 (6)
Terminal number	18, 19, 27, 29, 32, 33
Voltage level	0–24 V
Voltage level, logic 0 PNP	<5 V DC
Voltage level, logic 1 PNP	>10 V DC
Voltage level, logic 0 NPN	>19 V DC
Voltage level, logic 1 NPN	<14 V DC
Maximum voltage on input	28 V DC
Pulse frequency range	0–110 kHz
(Duty cycle) Minimum pulse width	4.5 ms
Input resistance, R_i	Approximately 4 kΩ

[1] The digital input is galvanically isolated from the supply voltage (PELV) and other high-voltage terminals.

7.9.2 STO Terminal 37 (Terminal 37 is Fixed PNP Logic)

Voltage level	0–24 V DC
Voltage level, logic 0 PNP	<4 V DC
Voltage level, logic 1 PNP	>20 V DC
Maximum voltage on input	28 V DC
Typical input current at 24 V	50 mA rms
Typical input current at 20 V	60 mA rms
Input capacitance	400 nF

All digital inputs are galvanically isolated from the supply voltage (PELV) and other high-voltage terminals.

When using a contactor with a DC coil inside in combination with STO, it is important to make a return way for the current from the coil when turning it off. This can be done by using a freewheel diode (or, alternatively, a 30 V or 50 V MOV for quicker response time) across the coil. Typical contactors can be bought with this diode.

7.9.3 Analog Inputs

Number of analog inputs	2
Terminal number	53, 54
Modes	Voltage or current
Mode select	Switch S201 and switch S202
Voltage mode	Switch S201/switch S202 = OFF (U)
Voltage level	-10 V to +10 V (scaleable)
Input resistance, R_i	Approximately 10 kΩ
Maximum voltage	±20 V
Current mode	Switch S201/S202 = ON (I)
Current level	0/4 to 20 mA (scaleable)
Input resistance, R_i	Approximately 200 Ω
Maximum current	30 mA
Resolution for analog inputs	10 bit (+ sign)
Accuracy of analog inputs	Maximum error 0.5% of full scale
Bandwidth	20 Hz/100 Hz

The analog inputs are galvanically isolated from the supply voltage (PELV) and other high-voltage terminals.

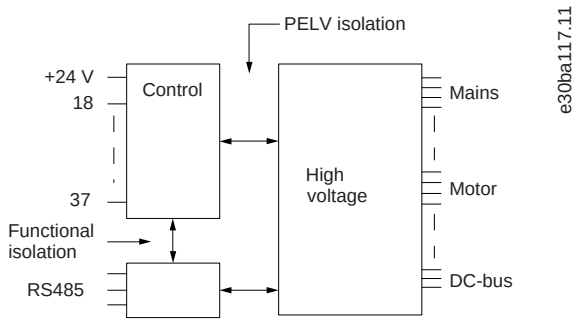

Illustration 29: PELV Isolation

7.9.4 Pulse/Encoder Inputs

Programmable pulse	2/1
Terminal number pulse	29, 33/33[1]
Maximum frequency at terminals 29, 33	110 kHz (Push-pull driven)
Maximum frequency at terminals 29, 33	5 kHz (Open collector)
Maximum frequency at terminals 29, 33	4 Hz
Voltage level	See 7.9.1 Digital Inputs.
Maximum voltage on input	28 V DC
Input resistance, R_i	Approximately 4 kΩ
Pulse input accuracy (0.1–1 kHz)	Maximum error: 0.1% of full scale
Encoder input accuracy (1–11 kHz)	Maximum error: 0.05% of full scale

[1] Pulse inputs are 29 and 33.

The pulse and encoder inputs (terminals 29 and 33) are galvanically isolated from the supply voltage (PELV) and other high-voltage terminals.

7.9.5 Digital Outputs

Programmable digital/pulse outputs	2
Terminal number	27, 29[1]
Voltage level at digital/frequency output	0–24 V
Maximum output current (sink or source)	40 mA
Maximum load at frequency output	1 kΩ
Maximum capacitive load at frequency output	10 nF
Minimum output frequency at frequency output	0 Hz
Maximum output frequency at frequency output	32 kHz
Accuracy of frequency output	Maximum error: 0.1% of full scale
Resolution of frequency outputs	12 bit

[1] Terminals 27 and 29 can also be programmed as input.

The digital output is galvanically isolated from the supply voltage (PELV) and other high-voltage terminals.

7.9.6 Analog Output

Number of programmable outputs	1
Terminal number	42
Current range at analog output	0/4 to 20 mA
Maximum load GND - analog output less than	500 Ω
Accuracy on analog output	Maximum error: 0.5% of full scale
Resolution of analog output	12 bit

The analog output is galvanically isolated from the supply voltage (PELV) and other high-voltage terminals.

7.9.7 Control Card, 24 V DC Output

Terminal number	12, 13
Output voltage	24 V +1, -3 V
Maximum load	200 mA

The 24 V DC supply is galvanically isolated from the supply voltage (PELV), but has the same potential as the analog and digital inputs and outputs.

7.9.8 Control Card, +10 V DC Output

Terminal number	50
Output voltage	10.5 V ±0.5 V
Maximum load	15 mA

The 10 V DC supply is galvanically isolated from the supply voltage (PELV) and other high-voltage terminals.

7.9.9 Control Card, RS485 Serial Communication

Terminal number	68 (P,TX+, RX+), 69 (N,TX-, RX-)
Terminal number 61	Common for terminals 68 and 69

The RS485 serial communication circuit is galvanically isolated from the supply voltage (PELV).

7.9.10 Control Card, USB Serial Communication

USB standard	1.1 (full speed)
USB plug	USB type B plug

Connection to the PC is carried out via a standard host/device USB cable.

The USB connection is galvanically isolated from the supply voltage (PELV) and other high-voltage terminals.

The USB ground connection is not galvanically isolated from protective earth. Use only an isolated laptop as PC connection to the USB connector on the drive.

7.9.11 Relay Outputs

Programmable relay outputs	2
Relay 01 terminal number	1–3 (break), 1–2 (make)
Maximum terminal load (AC-1)[1] on 1–3 (NC), 1–2 (NO) (resistive load)	240 V AC, 2 A
Maximum terminal load (AC-15)[1] (inductive load @ cosφ 0.4)	240 V AC, 0.2 A
Maximum terminal load (DC-1)[1] on 1–2 (NO), 1–3 (NC) (resistive load)	60 V DC, 1 A
Maximum terminal load (DC-13)[1] (inductive load)	24 V DC, 0.1 A
Relay 02 terminal number	4–6 (break), 4–5 (make)
Maximum terminal load (AC-1)[1] on 4–5 (NO) (resistive load)[2][3]	400 V AC, 2 A
Maximum terminal load (AC-15) on 4–5 (NO) (inductive load @ cosφ 0.4)	240 V AC, 0.2 A
Maximum terminal load (DC-1)[1] on 4–5 (NO) (resistive load)	80 V DC, 2 A
Maximum terminal load (DC-13)[1] on 4–5 (NO) (inductive load)	24 V DC, 0.1 A
Maximum terminal load (AC-1)[1] on 4–6 (NC) (resistive load)	240 V AC, 2 A
Maximum terminal load (AC-15)[1] on 4–6 (NC) (inductive load @ cosφ 0.4)	240 V AC, 0.2 A
Maximum terminal load (DC-1)[1] on 4–6 (NC) (resistive load)	50 V DC, 2 A
Maximum terminal load (DC-13)[1] on 4–6 (NC) (inductive load)	24 V DC, 0.1 A
Minimum terminal load on 1–3 (NC), 1–2 (NO), 4–6 (NC), 4–5 (NO)	24 V DC 1 mA, 24 V AC 20 mA
Environment according to EN 60664-1	Overvoltage category III/pollution degree 2

[1] IEC 60947 parts 4 and 5. The relay contacts are galvanically isolated from the rest of the circuit by reinforced isolation (PELV)

[2] Overvoltage Category II

[3] UL applications 300 V AC 2 A.

7.9.12 Control Card Performance

Scan interval	1 ms

7.9.13 Control Characteristics

Resolution of output frequency at 0–590 Hz	±0.003 Hz
Repeat accuracy of precise start/stop (terminals 18, 19)	≤±0.1 ms
System response time (terminals 18, 19, 27, 29, 32, 33)	≤2 ms
Speed control range (open loop)	1:100 of synchronous speed
Speed control range (closed loop)	1:1000 of synchronous speed
Speed accuracy (open loop)	30–4000 RPM: Error ±8 RPM
Speed accuracy (closed loop), depending on resolution of feedback device	0–6000 RPM: Error ±0.15 RPM
Torque control accuracy (speed feedback)	Maximum error ±5% of rated torque

All control characteristics are based on a 4-pole asynchronous motor.

7.10 Connection Tightening Torques

Table 23: Tightening Torque for Cables

Enclosure size	200–240 V [kW (hp)]	380–480/500 V [kW (hp)]	525–600 V [kW(hp)]	525–690 V [kW (hp)]	Mains [Nm (in-lb)]	Motor [Nm (in-lb)]	DC connection [Nm (in-lb)]	Brake [Nm (in-lb)]	Ground [Nm (in-lb)]	Relay [Nm (in-lb)]
A2	1.1–2.2 (1.5–3.0)	1.1–4.0 (1.5–5.0)	–	–	0.6	0.6	0.6	1.8	3.0	0.6
A3	3.0–3.7 (4.0– 5.0)	5.5–7.5 (7.5–10)	1.1–7.5 (1.5–10)	1.1–7.5 (1.5–10.0)	0.6	0.6	0.6	1.8	3.0	0.6
A4	1.1–2.2 (1.5–3.0)	1.1–4.0 (0.5–5.0)	–	–	0.6	0.6	0.6	1.8	3.0	0.6
A5	1.1–3.7 (1.5– 5.0)	1.1–7.5 (1.5–10)	1.1–7.5 (1.5–10.0)	–	0.6	0.6	0.6	1.8	3.0	0.6
B1	5.5–11 (7.5–15)	11–18 (15-24)	11–18 (15-24)	–	1.8	1.8 (15.9)	1.5	1.5	3.0	0.6
B2	15 (20)	22–30 (30–40)	22–30 (30–40)	11–30 (15– 40)	4.5 (39.8)	4.5 (39.8)	3.7	3.7	3.0	0.6
B3	5.5–11 (7.5–15)	11–18 (15-24)	11–18 (15-24)	–	1.8 (15.9)	1.8 (15.9)	1.8 (15.9)	1.8 (15.9)	3.0	0.6
B4	15–18 (20-24)	22–37 (30–50)	22–37 (30–50)	11–37 (15-50)	4.5 (39.8)	4.5 (39.8)	4.5 (39.8)	4.5 (39.8)	3.0	0.6
C1	18–30 (24– 40)	37–55 (50–75)	37–55 (50–75)	–	10 (89)	10 (89)	10 (89)	10 (89)	3.0	0.6
C2	37–45 (50– 60)	75–90 (100–125)	75–90 (100– 125)	37–90 (50–125)	14/24 (124/212)(1)	14/24 (124/212)(1)	14 (124)	14 (124)	3.0	0.6
C3	22–30 (30–40)	45–55 (60–75)	45–55 (60–75)	45–55 (60–75)	10 (89)	10 (89)	10 (89)	10 (89)	3.0	0.6
C4	37–45 (50– 60)	75–90 (100–125)	75–90 (100– 125)	–	14/24 (124/212)(1)	14/24 (124/212)(1)	14	14	3.0	0.6

[1] For different cable dimensions x/y, where x ≤95 mm^2 (3 AWG) and y ≥95 mm^2 (3 AWG).

7.11 Power Ratings, Weight, and Dimensions

Table 24: Power Ratings, Weight, and Dimensions, Enclosure Size A

Enclosure size		A2	A3	A4	A5
Rated power [kW (hp)]	**200–240 V**	**1.1–2.2 (1.5–3.0)**	**3.0–3.7 (4.0–5.0)**	**1.1–2.2 (1.5–3.0)**	**1.1–3.7 (1.5–5.0)**
	380-480/500 V	**1.1–4.0 (1.5–5.0)**	**5.5–7.5 (7.5–10)**	**1.1–4.0 (1.5–5.0)**	**1.1–7.5 (1.5–10)**

Enclosure size		A2		A3		A4	A5
	525–600 V	–		**1.1–7.5 (1.5–10)**		–	**1.1–7.5 (1.5–10)**
	525–690 V	–		**1.1–7.5 (1.5–10)**	–	–	–
Protection rating	–	**IP20(UL Open Type)**	**IP21(UL Type 1)**	**IP20(UL Open Type)**	**IP21(UL Type 1)**	**IP55/66(UL Type 12/4X)**	**IP55/66(UL Type 12/4X)**
Height [mm (in)]							
Height of mounting plate	A[1]	268 (10.6)	375 (14.8)	268 (10.6)	375 (14.8)	390 (15.4)	420 (16.5)
Height with ground termination plate for fieldbus cables	A	374 (14.7)	–	374 (14.7)	–	–	–
Distance between mounting holes	a	257 (10.1)	350 (13.8)	257 (10.1)	350 (13.8)	401 (15.8)	402 (15.8)
Width [mm (in)]							
Width of mounting plate	B	90 (3.5)	90 (3.5)	130 (5.1)	130 (5.1)	200 (7.9)	242 (9.5)
Width of mounting plate with 1 C option	B	130 (5.1)	130 (5.1)	170 (6.7)	170 (6.7)	–	242 (9.5)
Width of mounting plate with 2 C options	B	150 (5.9)	150 (5.9)	190 (7.5)	190 (7.5)	–	242 (9.5)
Distance between mounting holes	b	70 (2.8)	70 (2.8)	110 (4.3)	110 (4.3)	171 (6.7)	215 (8.5)
Depth [mm (in)]							
Depth without option A/B	C	205 (8.1)	207 (8.1)	205 (8.1)	207 (8.1)	175 (6.9)	200 (7.9)
With option A/B	C	220 (8.7)	222 (8.7)	220 (8.7)	222 (8.7)	175 (6.9)	200 (7.9)
Screw holes [mm (in)]							
	c	8.0 (0.31)	8.0 (0.31)	8.0 (0.31)	8.0 (0.31)	8.25 (0.32)	8.25 (0.32)
	d	ø11 (ø0.43)	ø11 (ø0.43)	ø11 (ø0.43)	ø11 (ø0.43)	ø12 (ø0.47)	ø12 (ø0.47)
	e	ø5.5 (ø0.22)	ø5.5 (ø0.22)	ø5.5 (ø0.22)	ø5.5 (ø0.22)	ø6.5 (ø0.26)	ø6.5 (ø0.26)
	f	9 (0.35)	9 (0.35)	6.5 (0.26)	6.5 (0.26)	6 (0.24)	9 (0.35)
Maximum weight [kg (lb)]		4.9 (10.8)	5.3 (11.7)	6.6 (14.6)	7 (15.4)	9.7 (21.4)	13.5/14.2 (30/31)
Front cover tightening torque [Nm (in-lb)]							
Plastic cover (low IP)		Click		Click		–	–
Metal cover (IP55/66)		–		–		1.5 (13.3)	1.5 (13.3)

[1] See Illustration 30 and Illustration 31.

Table 25: Power Ratings, Weight, and Dimensions, Enclosure Size B

Enclosure size			B1	B2	B3	B4
Rated power [kW (hp)]	**200–240 V**		**5.5–11 (7.5–15)**	**15 (20)**	**5.5–11 (7.5–15)**	**15–18 (20–24)**
	380-480/500 V		**11–18 (15–24)**	**22–30 (30–40)**	**11–18 (15–24)**	**22–37 (30–50)**
	525–600 V		**11–18 (15–24)**	**22–30 (30–40)**	**11–18 (15–24)**	**22–37 (30–50)**
	525–690 V		**–**	**11–30 (15–40)**	**–**	**11–37 (15–50)**
Protection rating	**–**		**IP21/55/66(UL Type 1/12/4X)**	**IP21/55/66(UL Type 1/12/4X)**	**IP20(UL Open Type)**	**IP20(UL Open Type)**
Height [mm (in)]						
Height of mounting plate		A[1]	480 (18.9)	650 (25.6)	399 (15.7)	520 (20.5)
Height with ground termination plate for fieldbus cables		A	–	–	420 (16.5)	595 (23.4)
Distance between mounting holes		a	454 (17.9)	624 (24.6)	380 (15)	495 (19.5)
Width [mm (in)]						
Width of mounting plate		B	242 (9.5)	242 (9.5)	165 (6.5)	230 (9.1)
Width of mounting plate with 1 C option		B	242 (9.5)	242 (9.5)	205 (8.1)	230 (9.1)
Width of mounting plate with 2 C options		B	242 (9.5)	242 (9.5)	225 (8.9)	230 (9.1
Distance between mounting holes		b	210 (8.3)	210 (8.3)	140 (5.5)	200 (7.9)
Depth [mm (in)]						
Depth without option A/B		C	260 (10.2)	260 (10.2)	249 (9.8)	242 (9.5)
With option A/B		C	260 (10.2)	260 (10.2)	262 (10.3)	242 (9.5)
Screw holes [mm (in)]						
	c		12 (0.47)	12 (0.47)	8 (0.31)	–
	d		ø19 (ø0.75)	ø19 (ø0.75)	12 (0.47)	–
	e		ø9 (ø0.35)	ø9 (ø0.35)	6.8 (0.27)	8.5 (0.33)
	f		9 (0.35)	9 (0.35)	7.9 (0.31)	15 (0.59)
Maximum weight [kg (lb)]			23 (51)	27 (60)	12 (26.5)	23.5 (52)
Front cover tightening torque [Nm (in-lb)]						
Plastic cover (low IP)			Click	Click	Click	Click
Metal cover (IP55/66)			2.2 (19.5)	2.2 (19.5)	–	–

[1] See Illustration 30 and Illustration 31.

Table 26: Power Ratings, Weight, and Dimensions, Enclosure Size C

Enclosure size		C1	C2	C3	C4
Rated power [kW (hp)]	**200–240 V**	**18–30 (24–40)**	**37–45 (50–60)**	**22–30 (30–40)**	**37–45 (50–60)**
	380-480/500 V	**37–55 (50–75)**	**75–90 (100–125)**	**45–55 (60–75)**	**75–90 (100–125)**
	525–600 V	**37–55 (50–75)**	**75–90 (100–125)**	**45–55 (60–75)**	**75–90 (100–125)**
	525–690 V	**–**	**37–90 (50–125)**	**45–55 (60–75)**	**–**
Protection rating	–	**IP21/55/66(UL Type 1/12/4X)**	**IP21/55/66(UL Type 1/12/4X)**	**IP20(UL Open Type)**	**IP20(UL Open Type)**
Height [mm (in)]					
Height of mounting plate	A[1]	680 (26.8)	770 (30.3)	550 (21.7)	660 (26)
Height with ground termination plate for fieldbus cables	A	–	–	630 (24.8)	800 (31.5)
Distance between mounting holes	a	648 (25.5)	739 (29.1)	521 (20.5)	631 (24.8)
Width [mm (in)]					
Width of mounting plate	B	308 (12.1)	370 (14.6)	308 (12.1)	370 (14.6)
Width of mounting plate with 1 C option	B	308 (12.1)	370 (14.6)	308 (12.1)	370 (14.6)
Width of mounting plate with 2 C options	B	308 (12.1)	370 (14.6)	308 (12.1)	370 (14.6)
Distance between mounting holes	b	272 (10.7)	334 (13.1)	270 (10.6)	330 (13)
Depth [mm (in)]					
Depth without option A/B	C	310 (12.2)	335 (13.2)	333 (13.1)	333 (13.1)
With option A/B	C	310 (12.2)	335 (13.2)	333 (13.1)	333 (13.1)
Screw holes [mm (in)]					
	c	12.5 (0.49)	12.5 (0.49)	–	–
	d	ø19 (ø0.75)	ø19 (ø0.75)	–	–
	e	ø9 (ø0.35)	ø9 (ø0.35)	8.5 (0.33)	8.5 (0.33)
	f	9.8 (0.39)	9.8 (0.39)	17 (0.67)	17 (0.67)
Maximum weight [kg (lb)]		45 (99)	65 (143)	35 (77)	50 (110)
Front cover tightening torque [Nm (in-lb)]					
Plastic cover (low IP)		Click	Click	2 (17.7)	2 (17.7)
Metal cover (IP55/66)		2.2 (19.5)	2.2 (19.5)	2 (17.7)	2 (17.7)

[1] See Illustration 30 and Illustration 31.

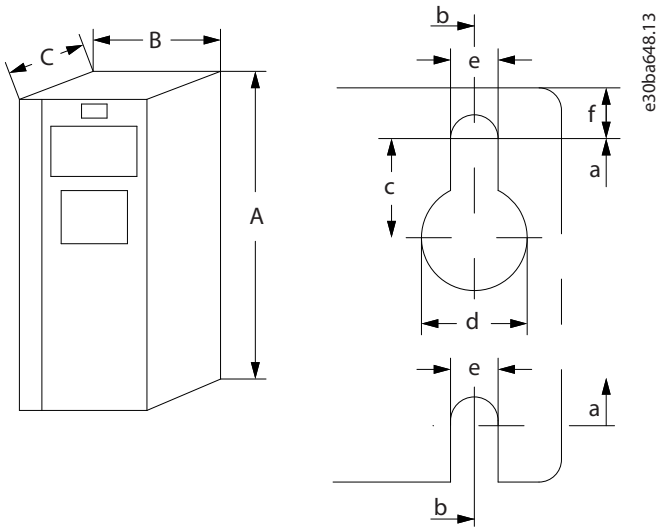

Illustration 30: Top and Bottom Mounting Holes

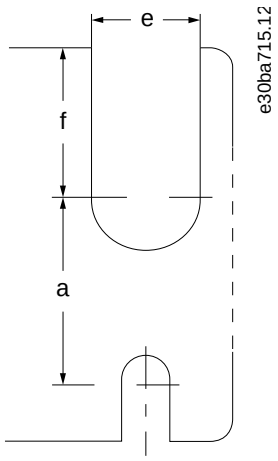

Illustration 31: Top and Bottom Mounting Holes, Enclosure Sizes B4, C3, and C4

8 Mechanical Installation Considerations

8.1 Storage

Store the drive in a dry location and keep the equipment sealed in its packaging until installation. Periodic forming (capacitor charging) is not necessary during storage unless storage exceeds 12 months.

If shelf life is longer than 4 years, a simple method, under no load conditions, can be used to check the condition of the capacitors.

If the stable DC-link voltage is approximately equal to 1.41 x U_{mains}, the capacitors are OK. To check the DC-link voltage in the drive, either measure it or check the corresponding parameters in the display.

If the DC-link voltage is significantly smaller than 1.41 x U_{mains}, it takes time for the capacitors to recover. If the DC-link voltage stays at a low level and does not reach approximately 1.41 x U_{mains} , contact the local service agent.

8.2 Operating Environment

In environments with airborne liquids, particles, or corrosive gases, ensure that the IP/Type rating of the equipment matches the installation environment. For specifications regarding ambient conditions, see the Ambient Conditions section.

NOTICE

CONDENSATION

Moisture can condense on the electronic components and cause short circuits. Avoid installation in areas subject to frost. Install an optional space heater when the drive is colder than the ambient air. Operating in standby mode reduces the risk of condensation as long as the power dissipation keeps the circuitry free of moisture.

NOTICE

EXTREME AMBIENT CONDITIONS

Hot or cold temperatures compromise unit performance and longevity.

- Do not operate in environments where the ambient temperature exceeds 55 °C (131 °F).
- The drive can operate at temperatures down to -10 °C (14 °F). However, proper operation at rated load is only guaranteed at 0 °C (32 °F) or higher.
- If the temperature exceeds ambient temperature limits, extra air conditioning is required for the cabinet or installation site.

8.2.1 Gases

Aggressive gases, such as hydrogen sulfide, chlorine, or ammonia can damage electrical and mechanical components of a drive. Contamination of the cooling air can also cause the gradual decomposition of PCB tracks and door seals. Aggressive contaminants are often present in sewage treatment plants or swimming pools. A clear sign of an aggressive atmosphere is corroded copper.

In aggressive atmospheres, restricted IP enclosures are recommended along with conformal-coated circuit boards.

NOTICE

The drive comes standard with class 3C2 coating. On request, class 3C3 coating is available.

Table 27: Conformal Coating Class Ratings

Gas type	Unit	Class				
		3C1	3C2		3C3	
		–	Average value	Maximum value[1]	Average value	Maximum value[1]
Sea salt	n/a	None	Salt mist		Salt mist	
Sulfur oxide	mg/m^3	0.1	0.3	1.0	5.0	10
Hydrogen sulfide	mg/m^3	0.01	0.1	0.5	3.0	10
Chlorine	mg/m^3	0.0.1	0.1	0.03	0.3	1.0

Gas type	Unit	Class				
Hydrogen chloride	mg/m^3	0.01	0.1	0.5	1.0	5.0
Hydrogen fluoride	mg/m^3	0.003	0.001	0.03	0.1	3.0
Ammonia	mg/m^3	0.3	1.0	3.0	10	35
Ozone	mg/m^3	0.01	0.05	0.1	0.1	0.3
Nitrogen	mg/m^3	0.1	0.5	1.0	3.0	9.0

[1] Maximum values are transient peak values and are not to exceed 30 minutes per day.

8.2.2 Dust

Installation of drives in environments with high dust exposure is often unavoidable. Dust affects wall or frame-mounted units with IP55/UL Type 12 or IP66/UL Type 4X protection rating and cabinet-mounted units with IP21/UL Type 1 or IP20/UL Open Type protection rating. Consider the following when installing drives in such environments:

- Reduced cooling.
- Cooling fans.
- Filters.
- Periodic maintenance.

Reduced cooling

Dust forms deposits on the surface of the device and inside on the circuit boards and the electronic components. These deposits act as insulation layers and hamper heat transfer to the ambient air, reducing the cooling capacity. The components become warmer, which causes accelerated aging of the electronic components and the service life of the unit decreases. Dust deposits on the heat sink in the back of the unit also decrease the service life of the unit.

Cooling fans

The airflow for cooling the unit is produced by cooling fans, usually on the back of the unit. The fan rotors have small bearings into which dust can penetrate and act as an abrasive, leading to bearing damage and fan failure.

Filters

High-power drives are equipped with cooling fans that expel hot air from the interior of the unit. Above a certain size, these fans are fitted with filter mats. These filters can quickly become clogged when used in dusty environments. Preventive measures are necessary under these conditions.

Periodic maintenance

Under the conditions described above, it is recommended to clean the drive during periodic maintenance. Remove dust from the heat sink and fans, and clean the filter mats.

8.2.3 Outdoor Installation in freezing Temperature Environments

N O T I C E

LIMITATIONS

If the drive is used daily at low temperatures, lifetime of the mains disconnect switch can be reduced. If advice in this section is not followed, lifetime of the drive can be reduced.

- For cold starts at temperatures between -10 °C (14 °F) through -25 °C (-13 °F), it is recommended to let the drive run in idle for 30 minutes before loading it.
- LCP @-20 °C (-4 °F): After cold start, reasonable readability is typically reached after 5–10 s. Change of readout also takes 5–10 s.
- LCP @-25 °C (-13 °F): The LCP may have a weak readout at start-up. Normal readout is normally reached within 5 minutes. Change of readout takes 5–10 s
- ATEX: Approved down to -20 °C (-4 °F).
- Usage of option VLT® 24 V DC Supply Option MCB 107: Instability issues can be expected outside normal operating range for the drive (-10 °C (14 °F) to +45 °C/50 °C (113 °F/122 °F).
- For harsh environments such as salt mist, Danfoss recommends using IP66/UL Type 4X drive configuration.

Under certain circumstances, drives in IP55/66 and UL Type 3R/4X configuration can be used for outdoor installation down to -25 °C (77 °F).

To facilitate outdoor installation, it is critical to prevent condensing liquid inside the drive. This section outlines the conditions under which outdoor usage of the drive is allowed:

- Ensure drive temperature by:
  - Keeping the drive powered on for temperatures below 0 °C (32 °F).
  - Keeping the drive running at maximum 50% load for minimum 10 minutes before increasing to full load for temperatures below -10 °C (14 °F).
- Shield the drive against direct sunlight, preferably by using the weather shield provided by Danfoss. The weather shield is designed to provide more protection of outdoor rated drives, when there is a risk of snow collecting on the top of the drive or excessive rain, which could subcool the drive, leading to internal condensation. The weather shield is made of corrosion resistant stainless steel AISI316 and is also suitable for installation in coastal areas and marine environments.
- Using DC hold keeps the temperature at a level where condensation does not form. This function can be activated in *parameter 1–80 Function at Stop*. This selection makes sure that no condensation takes place in the drive as long as the drive is powered on. Furthermore, it keeps condensation out of the motor.
- **For temperatures from 0 °C (32 °F) to –10 °C (14 °F):** Set the fan control to low-temperature environment setting in *parameter 14–52 Fan Control* to switch off the heat sink fan and therefore the external fan. This selection adjusts the fan control to the cold environment, preventing the negative effect from further cooling and triggering a false alarm.
- **For temperatures below –20 °C:** Set the fan control to low-temperature environment setting in *parameter 14–52 Fan Control* to switch off the heat sink fan and therefore the external fan. This selection adjusts the fan control to the cold environment, preventing the negative effect from further cooling and triggering a false alarm. Disable *parameter 14–53 Fan Monitor*. This selection also prevents warnings triggered falsely due to cold temperatures.

8.2.4 Potentially Explosive Atmospheres

⚠ W A R N I N G ⚠

EXPLOSIVE ATMOSPHERE

Installing the drive in a potentially explosive atmosphere can lead to death, personal injury, or property damage.

- Install the unit in a cabinet outside of the potentially explosive area.
- Use a motor with an appropriate ATEX protection class.
- Install a PTC temperature sensor to monitor the motor temperature.
- Install short motor cables.
- Use sine-wave output filters when shielded motor cables are not used.

As required by the EU Directive 2014/34/EU, any electrical or electronic device intended for use in an environment with a potentially explosive mixture of air, flammable gas, or dust must be ATEX-certified. Systems operated in this environment must fulfill the following special conditions to comply with the ATEX protection class:

- Class d specifies that if a spark occurs, it is contained in a protected area.
- Class e prohibits any occurrence of a spark.

Motors with class d protection

Does not require approval. Special wiring and containment are required.

Motors with class e or class n protection

When combined with an ATEX-approved PTC monitoring device like the VLT® PTC Thermistor Card MCB 112, installation does not need an individual approval from an approbated organization.

Motors with class d/e protection

The motor itself has an e ignition protection class, while the motor cabling and connection environment are in compliance with the d classification. To attenuate the high peak voltage, use a sine-wave filter at the drive output.

N O T I C E

MOTOR THERMISTOR SENSOR MONITORING

Units with the VLT® PTC Thermistor Card MCB 112 option are PTB-certified for potentially explosive atmospheres.

8.3 Mounting Considerations

8.3.1 Side-by-side Mounting

All enclosure sizes allow side-by-side installation except when an IP21, UL Type 1, or UL Type 4X enclosure is used.

IP21/UL Type 1 A and B enclosures can be arranged side by side with no clearance required between them. However, the mounting order is important.

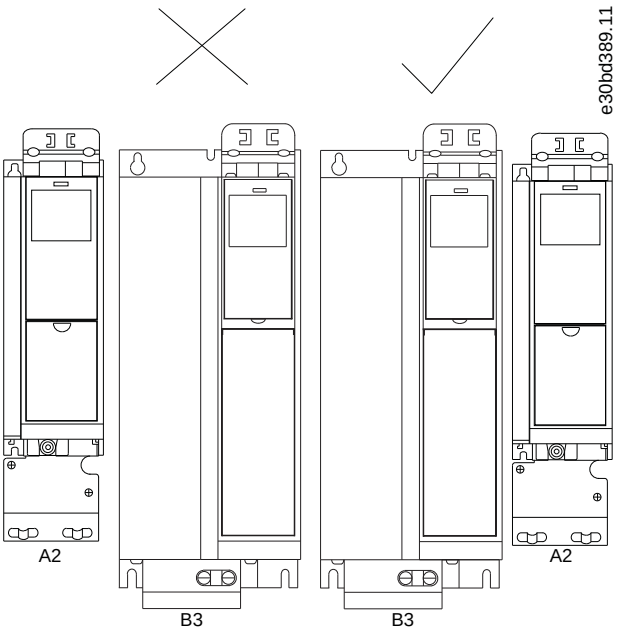

Illustration 32: Correct Side-by-side Mounting

If the IP21/UL Type 1 enclosure kit is used on enclosure sizes A2 or A3, there must be a clearance between each drive of minimum 50 mm (2 in). For optimal cooling conditions, allow a free air passage above and below the drive, see Table 28.

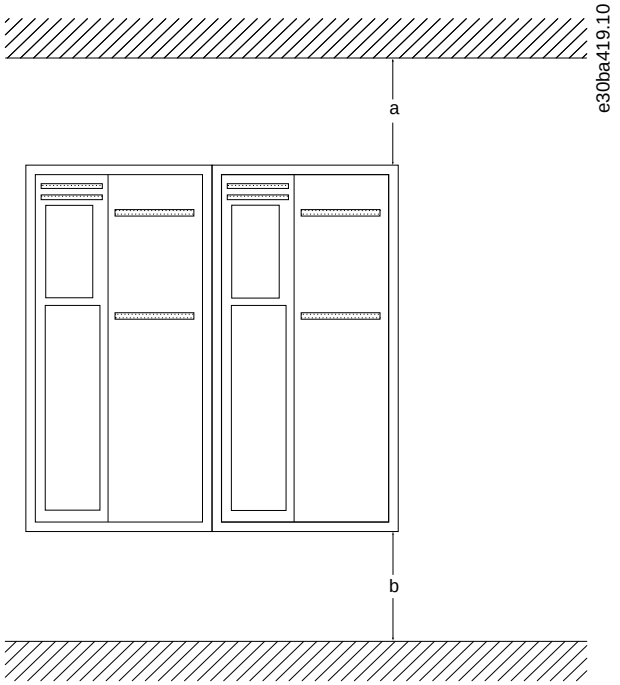

Illustration 33: Clearance

Table 28: Air Passage for Different Enclosure Sizes

Enclosure size	A2, A3, A4, A5, B1	B2, B3, B4, C1, C3	C2, C4
a [mm (in)]	100 (3.9)	200 (7.9)	225 (8.9)
b [mm (in)]	100 (3.9)	200 (7.9)	225 (8.9)

8.3.2 Wall Mounting

If the drive is to be mounted on a non-solid back wall, provide the drive with a mounting plate due to insufficient cooling air over the heat sink.

N O T I C E

The mounting plate is only relevant for enclosure sizes A4, A5, B1, B2, C1, and C2.

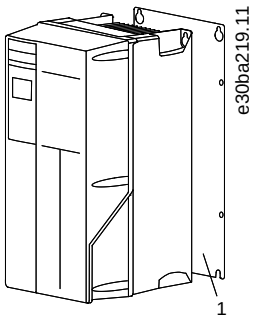

Illustration 34: Installing with Mounting Plate

1	Mounting plate

Procedure

1. Drill holes according to the measurements given.
2. Provide screws suitable for the surface for mounting the drive.
3. Retighten all 4 screws.

For drives with IP66, take extra care to maintain the corrosive-resistant surface. A fiber washer or a nylon washer may be used to protect the epoxy coating.

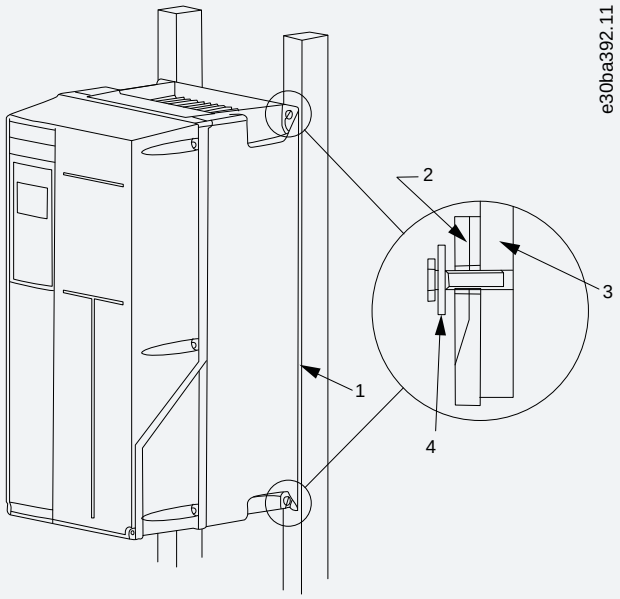

Illustration 35: Mounting an IP66/UL Type 4X Drive with Washers

1	Mounting plate	3	Base plate
2	IP66/UL Type 4X drive	4	Fiber washer

8.4 Derating

8.4.1 Derating for Running at Low Speed

When a motor is connected to a drive, it is necessary to ensure that the cooling of the motor is adequate.

The level of heating depends on the load on the motor, the operating speed, and time.

Constant torque applications (CT mode)

A problem may occur at low RPM values in constant torque applications. In a constant torque application, a motor may overheat at low speeds due to less cooling air from the motor integral fan.

Therefore, if the motor is to be run continuously at an RPM value lower than half of the rated value, the motor must be supplied with extra air cooling (or a motor designed for this type of operation may be used).

Alternatively, reduce the load level of the motor by selecting a larger motor. However, the design of the drive limits the motor size.

Variable (quadratic) torque applications (VT)

In VT applications such as centrifugal pumps and fans, where the torque is proportional to the square of the speed and the power is proportional to the cube of the speed, there is no need for extra cooling or derating of the motor.

8.4.2 Derating for Low Air Pressure

The cooling capability of air is decreased at lower air pressure.

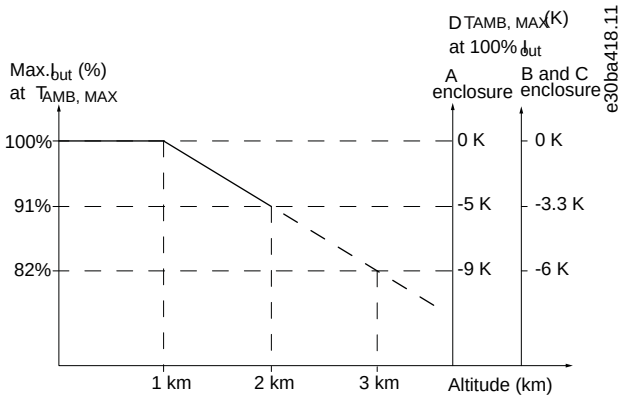

Illustration 36: Derating of Output Current Versus Altitude at $T_{AMB, MAX}$ for Enclosure Sizes A, B, and C

Below 1000 m (3280 ft) altitude, no derating is necessary. Above 1000 m (3280 ft), the ambient temperature (T_{AMB}) or maximum output current (I_{out}) should be derated in accordance with the diagram in Illustration 37.

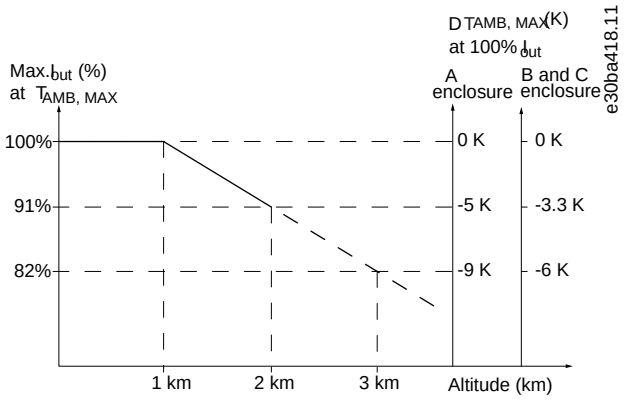

Illustration 37: Derating of Output Current versus Altitude at $T_{AMB,MAX}$ for Enclosure Sizes A, B, and C

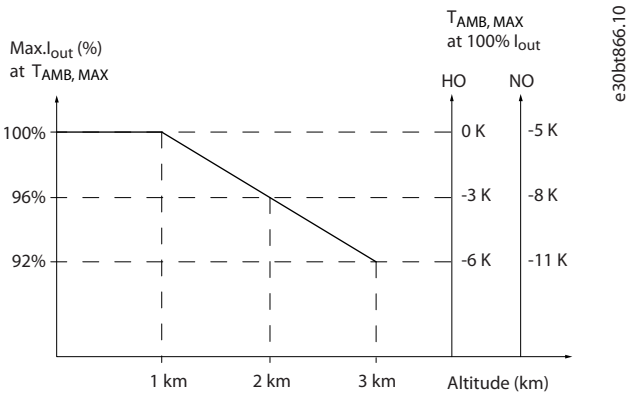

Illustration 38: Derating of Output Current Based on Altitude at $T_{AMB,MAX}$

At altitudes above 2000 m (6561 ft), contact Danfoss regarding PELV.

Alternatively, lower the ambient temperature at high altitudes and thereby ensure 100% output current at high altitudes. As an example of how to read the graph, the situation at 2000 m (6561 ft) is elaborated for an enclosure size B with $T_{AMB,MAX}$ = 50 °C (122 °F). Either the output current has to be reduces to 91% at $T_{AMB,MAX}$, or the maximum temperature has to be reduced by 3.3 K at 100% I_{out}. This means that 100% of the rated output current is available at 41.7 °C (107 °F) continuous and 46.7 °C (116 °F) intermittent.

8.4.3 Derating for Ambient Temperature and Switching Frequency

8.4.3.1 Derating for Ambient Temperature, Enclosure Size A

60° AVM - Pulse width modulation	SFAVM - Stator frequency asynchronous vector modulation
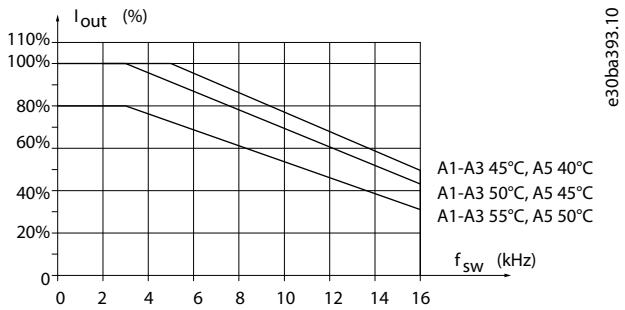	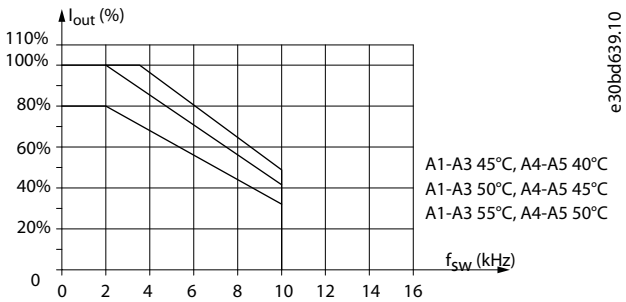
Illustration 39: Derating of I_{out} for Different $T_{AMB,MAX}$ for Enclosure Size A, using 60° AVM	**Illustration 40: Derating of I_{out} for Different $T_{AMB,MAX}$ for Enclosure Size A, using SFAVM**

When using only 10 m (32.8 ft) motor cable or less in enclosure size A, less derating is necessary. This is because the length of the motor cable has a relatively high impact on the recommended derating.

60° AVM - Pulse width modulation	SFAVM - Stator frequency asynchronous vector modulation
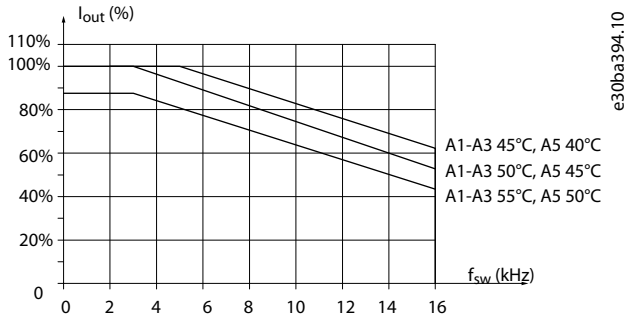 **Illustration 41: Derating of I_{out} for Different $T_{AMB,MAX}$ for Enclosure Size A, using 60° AVM and Maximum 10 m (32.8 ft) Motor Cable**	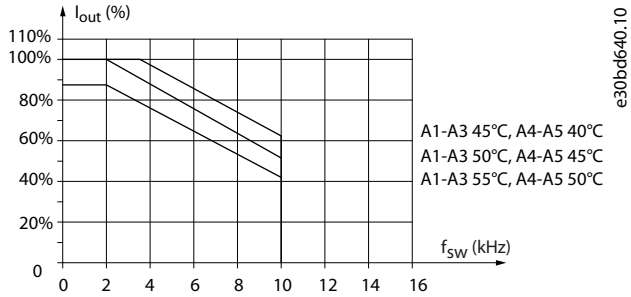 **Illustration 42: Derating of I_{out} for Different T for Enclosure Size A, using SFAVM and Maximum 10 m (32.8 ft) Motor Cable**

Enclosure size A3, T7

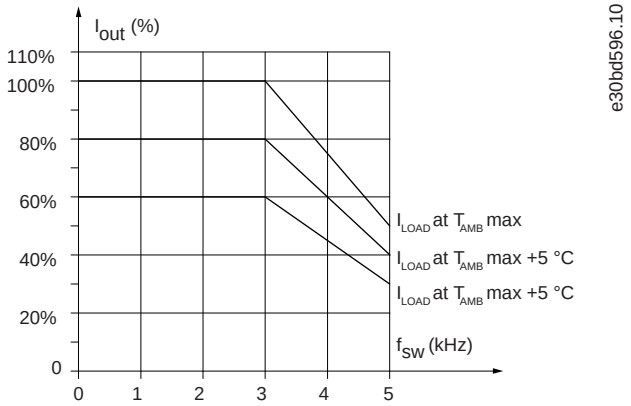

Illustration 43: Derating of I_{out} for Different $T_{AMB,MAX}$ for Enclosure Size A3

8.4.3.2 Derating for Ambient Temperature, Enclosure Size B

Enclosure Size B - T2, T4, and T5

For enclosure sizes B and C, the derating also depends on the overload mode selected in *parameter 1-04 Overload Mode*.

60° AVM - Pulse width modulation, normal overload (110%)	SFAVM - Stator frequency asynchronous vector modulation, normal overload (110%)
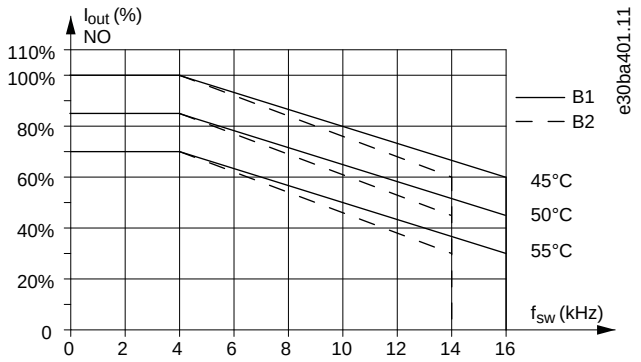 **Illustration 44: Derating of I_{out} for Different $T_{AMB,MAX}$ for Enclosures Sizes B1 and B2, using 60° AVM**	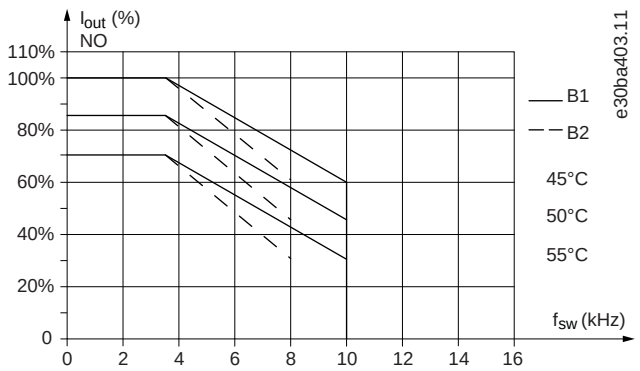 **Illustration 45: Derating of I_{out} for Different $T_{AMB,MAX}$ for Enclosure Sizes B1 and B2, using SFAVM**
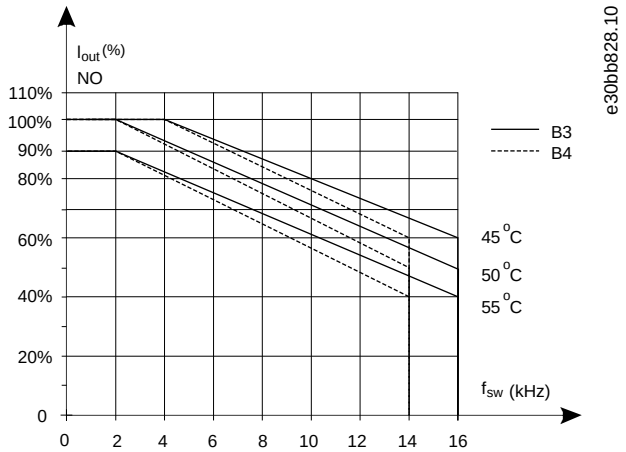 **Illustration 46: Derating of I_{out} for Different $T_{AMB,MAX}$ for Enclosure Sizes B3 and B4, using 60° AVM**	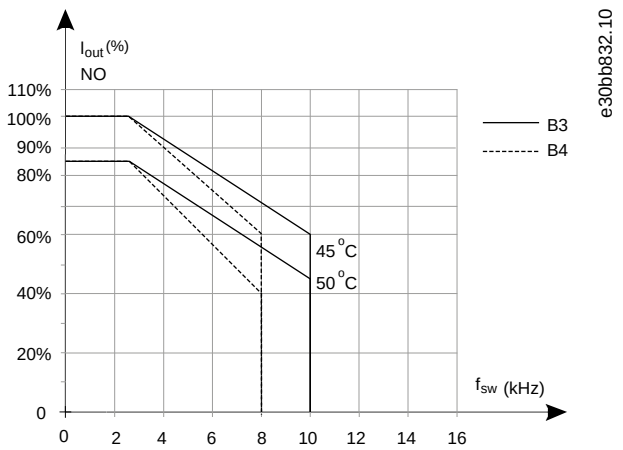 **Illustration 47: Derating of I_{out} for Different $T_{AMB,MAX}$ for Enclosure Sizes B3 and B4, using SFAVM**

Enclosure Size B - T6

60° AVM - Pulse width modulation, normal overload (110%)	SFAVM - Stator frequency asynchronous vector modulation, normal overload (110%)
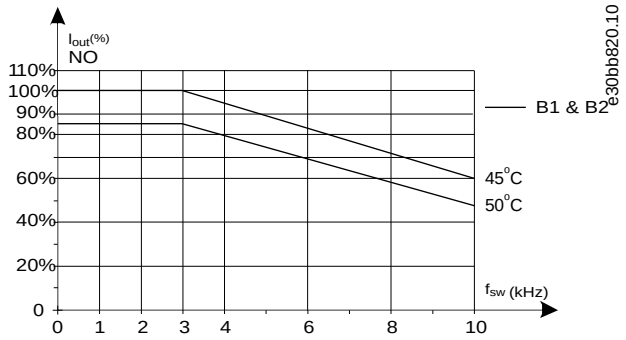	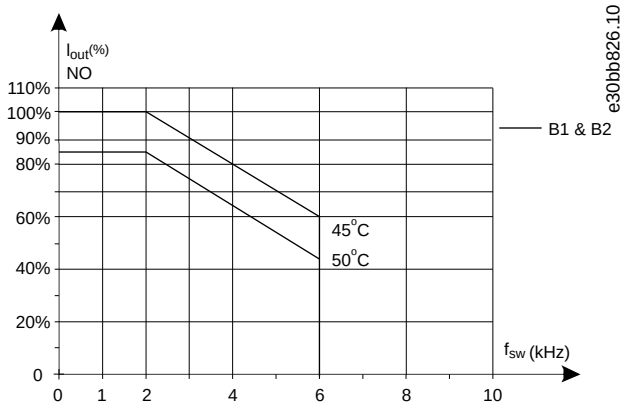
Illustration 48: Output Current Derating with Switching Frequency and Ambient Temperature for 600 V Drives, for Enclosure Size B, using 60° AVM	**Illustration 49: Output Current Derating with Switching Frequency and Ambient Temperature for 600 V Drives, Enclosure Size B; SFAVM**

Enclosure Sizes B2 and B4, 525–690 V - T7

N O T I C E

The curves are drawn with the current as absolute value and is valid for both high and normal overload.

60° AVM - Pulse width modulation	SFAVM - Stator frequency asynchronous vector modulation
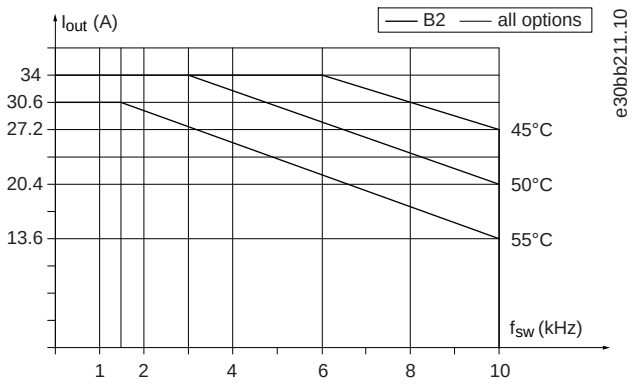	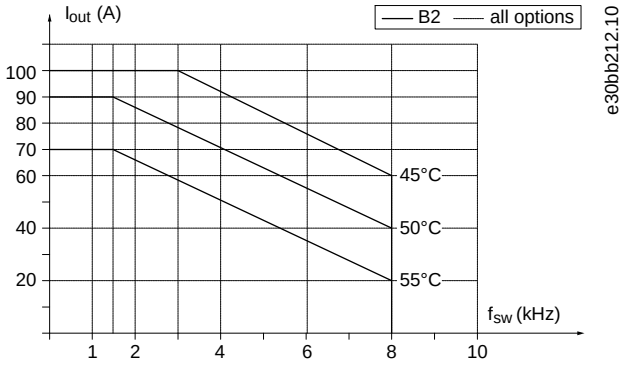
Illustration 50: Output Current Derating with Switching Frequency and Ambient Temperature for Enclosure Size B2 using 60° AVM	**Illustration 51: Output Current Derating with Switching Frequency and Ambient Temperature for Enclosure Sizes B2 using SFAVM**

8.4.3.3 Derating for Ambient Temperature, Enclosure Size C

Enclosure Size C - T2, T4, and T5

60° AVM - Pulse width modulation, normal overload (110%)	SFAVM - Stator frequency asynchron vector modulation, normal overload (110%)
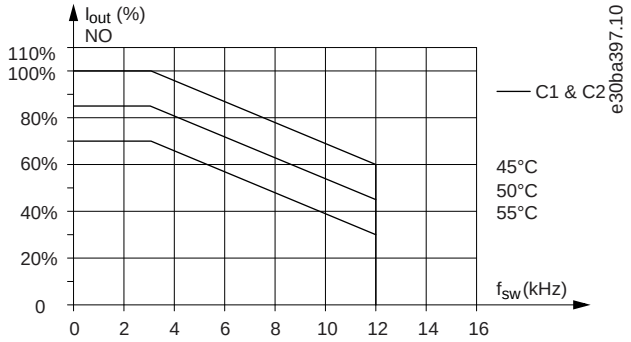 **Illustration 52: Derating of I_{out} for Different $T_{AMB,MAX}$ for Enclosures Sizes C1 and C2, using 60° AVM**	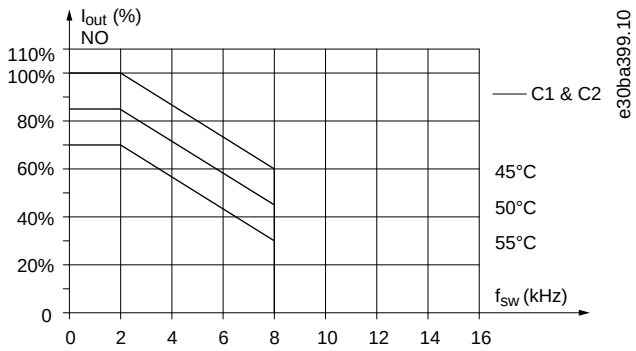 **Illustration 53: Derating of I_{out} for Different $T_{AMB,MAX}$ for Enclosures Sizes C1 and C2, using SFAVM**
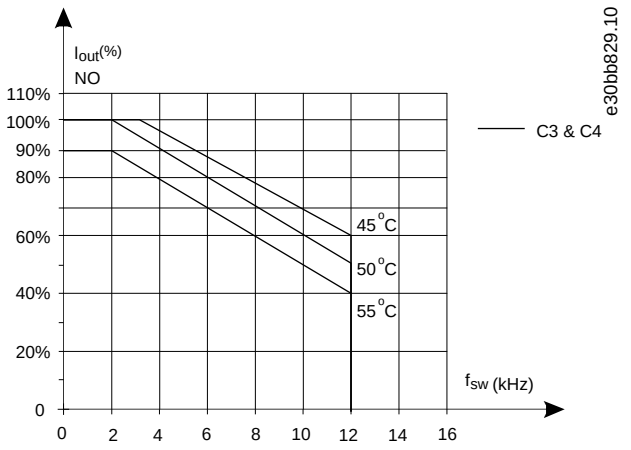 **Illustration 54: Derating of I_{out} for Different $T_{AMB,MAX}$ for Enclosures Sizes C3 and C4, using 60° AVM**	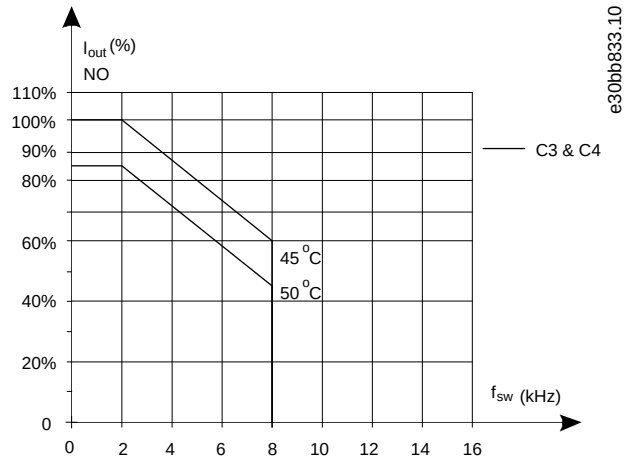 **Illustration 55: Derating of I_{out} for Different $T_{AMB,MAX}$ for Enclosures Sizes C3 and C4, using SFAVM**

Enclosure Size C - T6

60° AVM - Pulse width modulation, normal overload (110%)	SFAVM - Stator frequency asynchron vector modulation, normal overload (110%)
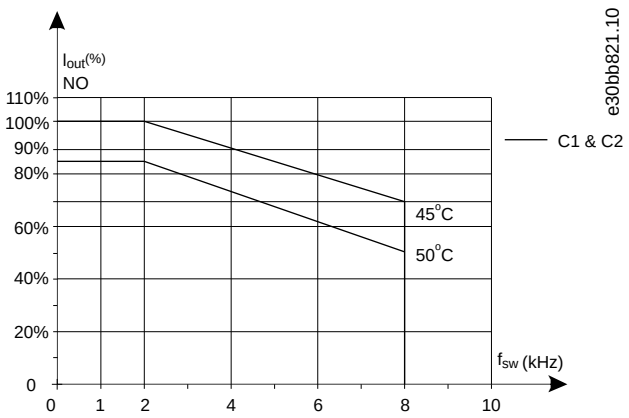 **Illustration 56: Output Current Derating with Switching Frequency and Ambient Temperature for 600 V Drives, for Enclosure Size C, using 60° AVM**	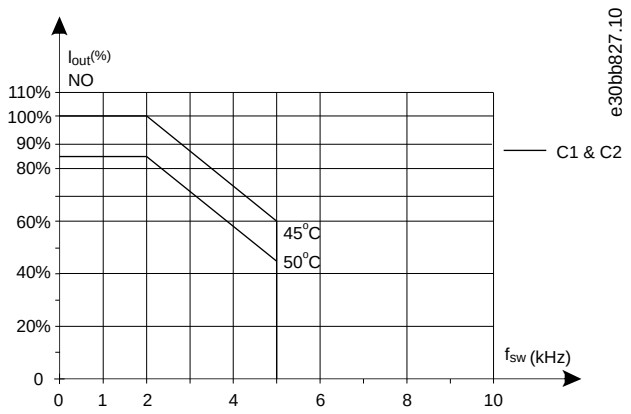 **Illustration 57: Output Current Derating with Switching Frequency and Ambient Temperature for 600 V Drives, Enclosure Size C; SFAVM**

Enclosure Size C - T7

N O T I C E

The curves are drawn with the current as absolute value and is valid for both high and normal overload.

60° AVM - Pulse width modulation	SFAVM - Stator frequency asynchron vector modulation
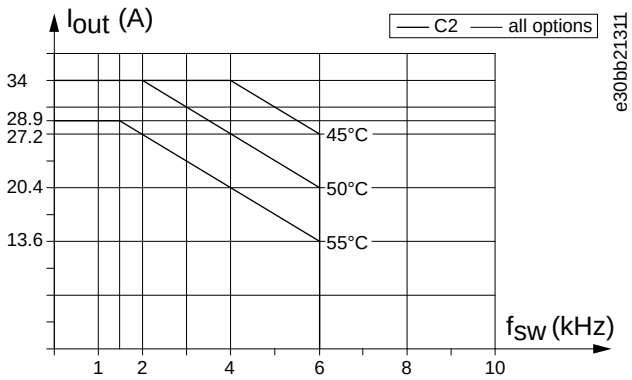 **Illustration 58: Output Current Derating with Switching Frequency and Ambient Temperature for Enclosure Size C2, using 60° AVM**	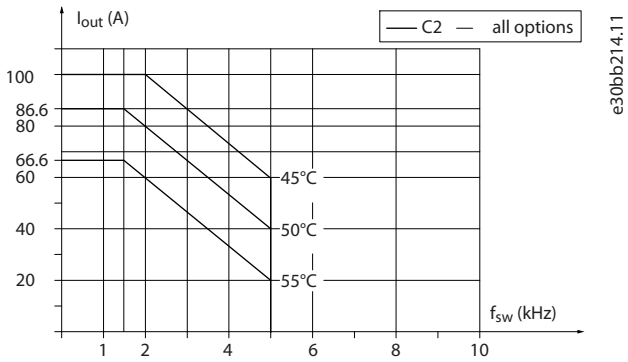 **Illustration 59: Output Current Derating with Switching Frequency and Ambient Temperature for Enclosure Size C2, using SFAVM**

9 Electrical Installation Considerations

9.1 Safety Instructions

⚠ W A R N I N G ⚠

INDUCED VOLTAGE

Induced voltage from output motor cables that run together can charge equipment capacitors, even with the equipment turned off and locked out. Failure to run output motor cables separately or to use shielded cables could result in death or serious injury.

- Run output motor cables separately or use shielded cables.
- Simultaneously lock out all the drives.

⚠ W A R N I N G ⚠

SHOCK HAZARD

The unit can cause a DC current in the PE conductor. Failure to use a Type B residual current-operated protective device (RCD) may lead to the RCD not providing the intended protection and therefore may result in death or serious injury.

- When an RCD is used for protection against electrical shock, only a Type B device is allowed on the supply side.

⚠ W A R N I N G ⚠

LEAKAGE CURRENT HAZARD

Leakage currents exceed 3.5 mA. Failure to ground the drive properly can result in death or serious injury.

- Ensure the correct grounding of the equipment by a certified electrical installer.

For electrical safety

According to the standard EN 61800-5-1, 1 or more of these conditions for the protective circuit must be true. The connection must be fixed.

- The protective earthing conductor must have a cross-sectional area of minimum 10 mm^2 (8 AWG) Cu or 16 mm^2 (6 AWG), OR
- There must be an automatic disconnection of the mains if the protective earthing conductor breaks, OR
- There must be a terminal for a 2nd protective earthing conductor in the same cross-sectional are as the 1st protective earthing conductor.

Cross-sectional area of the phase conductors (S) [mm^2 (AWG)]	The minimum cross-sectional area of the protective earthing conductor in question [mm^2 (AWG)]
S≤16 (6)	S
16 (6)<S≤35 (2)	16 (6)
35 (2)<S	S/2

The values of the table are only valid if the protective earthing conductor is made of the same metal as the phase conductors. If not, the cross-sectional area of the protective earthing conductor must be determined in a manner that produces a conductance equivalent to that which results from the calculations in the table.

The cross-sectional area of each protective earthing conductor that is not a part of the mains cable or the cable enclosure must be a minimum of:

- 25 mm^2 (14 AWG) if there is mechanical protection, AND
- 4 mm^2 (12 AWG) if there is no mechanical protection. With cord-connected equipment, ensure that the protective earthing conductor in the cord is the last conductor to be interrupted if the strain relief mechanism breaks.

Adhere to the local regulations on the minimum size of the protective earthing conductor.

Further instructions for electrical safety:

- Ground the drive in accordance with applicable standards and directives.
- Use a dedicated ground wire for input power, motor power, and control wiring.

- Do not ground 1 drive to another in a daisy-chain fashion.
- Keep the ground wire connections as short as possible.
- Follow the wiring requirements from the motor manufacturer.

For EMC-compliant installation

- Establish electrical contact between cable shield and drive enclosure by using metal grommets or by using the clamps provided on the equipment.
- Use high-strand wire to reduce burst transient.
- Do not use pigtails.

Overcurrent protection:

- Extra protection equipment such as short-circuit protection or motor thermal protection between drive and motor are required for applications with multiple motors.
- Input fusing is required to provide short circuit and overcurrent protection. If fuses are not factory-supplied, the installer must provide them. See maximum fuse ratings in 9.5.2 CE Compliance, 9.5.3 UL Compliance (61800-5-1), and 9.5.4 UL Compliance (508C).

Wire type and ratings:

- All wiring must comply with local and national regulations regarding cross-section and ambient temperature requirements.
- Power connection wire recommendation: Minimum 75 °C (167 °F) rated copper wire.

9.2 Wiring Schematic

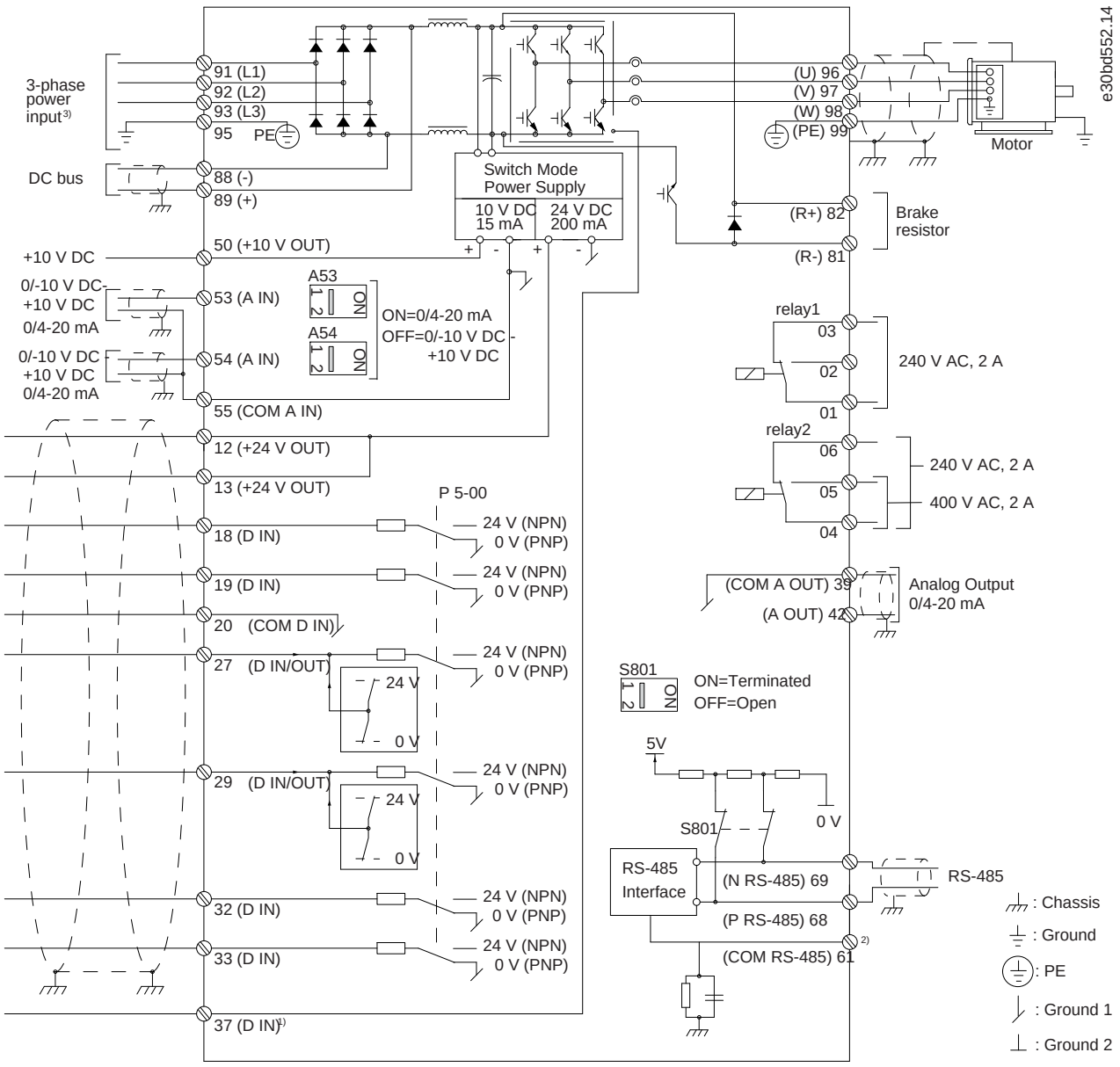

Illustration 60: Basic Wiring Schematic

A	Analog.	2	Do not connect cable shield.
D	Digital.	3	For 1-phase power input, wire to L1 and L2.
1	Terminal 37 (optional) is used for Safe Torque Off. For Safe Torque Off installation instructions, refer to the Safe Torque Off Operating Guide for Danfoss VLT® Frequency Converters.		

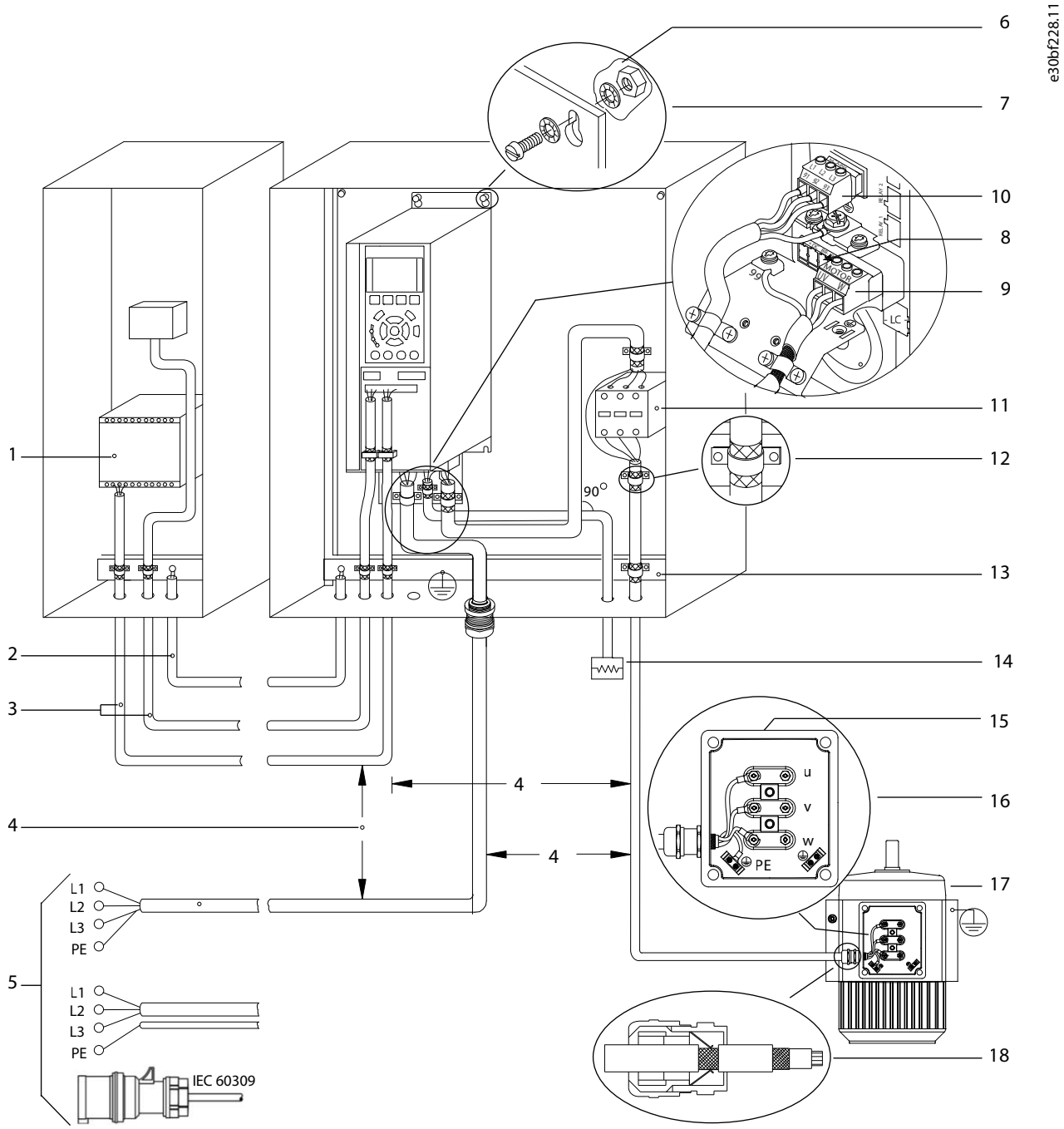

Illustration 61: EMC-compliant Electrical Connection

1	PLC.	10	Mains cable (unshielded).
2	Equalizing minimum 16 mm^2 (6 AWG).	11	Output contactor, and more.
3	Control cables.	12	Cable insulation stripped.
4	Minimum 200 mm (7.9 in) between control cables, motor cables, and mains cables.	13	Common ground busbar. Follow local and national requirements for cabinet grounding.
5	Mains supply.	14	Brake resistor.
6	Bare (unpainted) surface.	15	Metal box.
7	Star washers.	16	Connection to motor.
8	Brake cable (shielded).	17	Motor.
9	Motor cable (shielded).	18	EMC cable gland.

NOTICE

EMC INTERFERENCE

Use shielded cables for motor and control wiring, and separate cables for input power, motor wiring, and control wiring. Failure to isolate power, motor, and control cables can result in unintended behavior or reduced performance. Minimum 200 mm (7.9 in) clearance is required between power, motor, and control cables.

9.3 Cables

9.3.1 EMC-correct Cables

To optimize EMC immunity of the control cables and emission from the motor cables, use braided shielded/armored cables.

The ability of a cable to reduce the in- and outgoing radiation of electric noise depends on the transfer impedance (Z_T). The shield of a cable is normally designed to reduce the transfer of electric noise. However, a shield with a lower transfer impedance (Z_T) value is more effective than a shield with a higher transfer impedance (Z_T).

Cable manufacturers rarely state the transfer impedance (Z_T), but it is often possible to estimate transfer impedance (Z_T) by assessing the physical design of the cable.

Transfer impedance (Z_T) can be assessed based on the following factors:

- The conductibility of the shield material.
- The contact resistance between the individual shield conductors.
- The shield coverage, that is, the physical area of the cable covered by the shield - often stated as a percentage value.
- Shield type (braided or twisted).

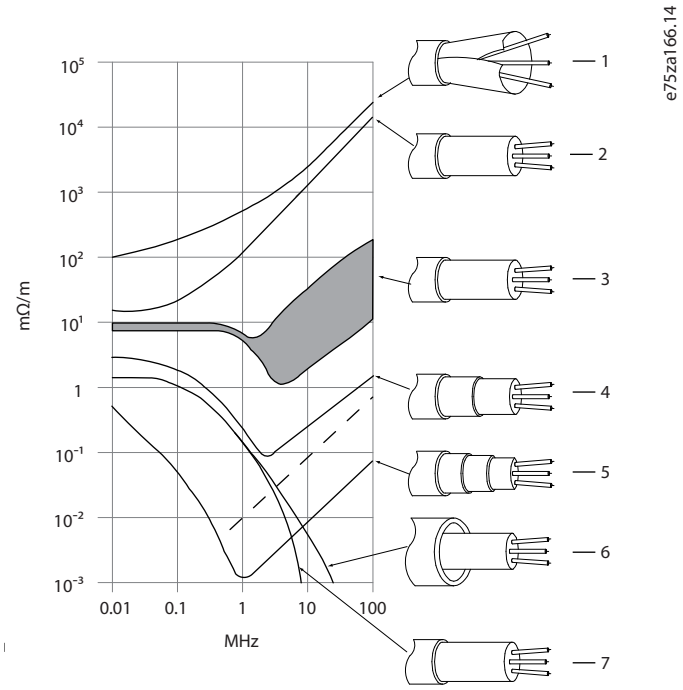

Illustration 62: Transfer Impedance (Z_T)

1	Aluminum-clad with copper wire.	5	Twin layer of braided copper wire with a magnetic, shielded/armored intermediate layer.
2	Twisted copper wire or armored steel wire cable.	6	Cable that runs in copper tube or steel tube.
3	Single-layer braided copper wire with varying percentage shield coverage. This is the typical reference cable.	7	Lead cable with 1.1 mm (0.04 in) wall thickness.
4	Double-layer braided copper wire.		

9.3.2 Preparing Cable Entry Holes

Procedure

1. Remove cable entry from the drive. Avoid that foreign parts fall into the drive when removing the knockouts.
2. Support the cable entry where the knockout is to be removed.
3. Remove the knockout with a strong mandrel and a hammer.
4. Remove burrs from the hole.
5. Mount the cable entry on the drive.

9.3.3 Specifications of Entry Holes

The suggested uses of the holes are recommendations, but other solutions are possible. Unused cable entry holes can be sealed with rubber grommets (for IP21/UL Type 1).

9.3.3.1 Entry Holes, Enclosure Size A2, IP21/UL Type 1

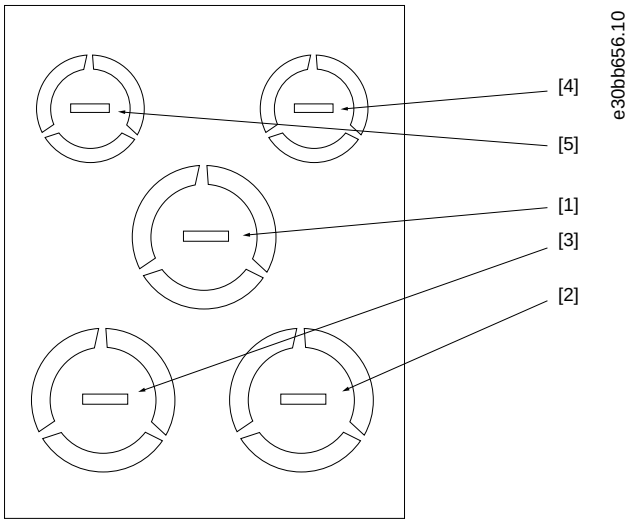

Table 29: Dimensions of Entry Holes for Enclosure Size A2, IP21/UL Type 1

Hole number and recommended use	Dimensions[1]		Nearest metric
	UL [in]	[mm]	
1) Mains	3/4	28.4	M25
2) Motor	3/4	28.4	M25
3) Brake/loadsharing	3/4	28.4	M25
4) Control cable	1/2	22.5	M20
5) Control cable	1/2	22.5	M20

[1] Tolerance ±0.2 mm.

9.3.3.2 Entry Holes, Enclosure Size A3, IP21/UL Type 1

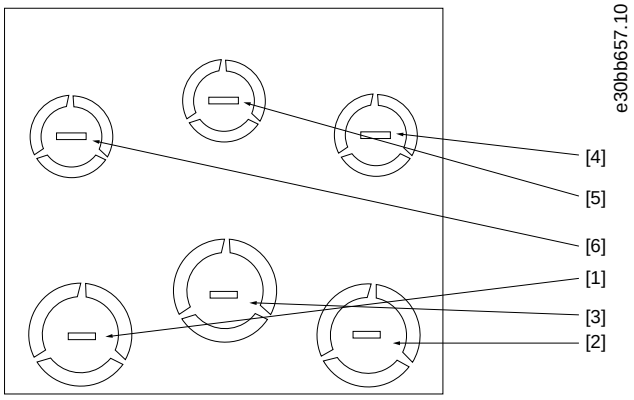

Table 30: Dimensions of Entry Holes for Enclosure Size A3, IP21/UL Type 1

Hole number and recommended use	Dimensions[1]		Nearest metric
	UL [in]	[mm]	
1) Mains	3/4	28.4	M25
2) Motor	3/4	28.4	M25

Hole number and recommended use	Dimensions[1]		Nearest metric
3) Brake/loadsharing	3/4	28.4	M25
4) Control cable	1/2	22.5	M20
5) Control cable	1/2	22.5	M20
6) Control cable	1/2	22.5	M20

[1] Tolerance ±0.2 mm.

9.3.3.3 Entry Holes, Enclosure Size A4, IP55/UL Type 12

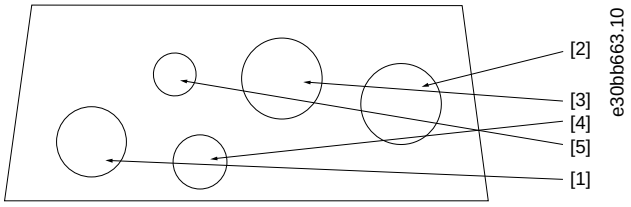

Table 31: Dimensions of Entry Holes for Enclosure Size A4, IP55/UL Type 12

Hole number and recommended use	Dimensions[1]		Nearest metric
	UL [in]	[mm]	
1) Mains	3/4	28.4	M25
2) Motor	3/4	28.4	M25
3) Brake/loadsharing	3/4	28.4	M25
4) Control cable	1/2	22.5	M20
5) Removed	–	–	–

[1] Tolerance ±0.2 mm.

9.3.3.4 Entry Holes, Enclosure Size A4, IP55/UL Type 12 Threaded Gland Holes

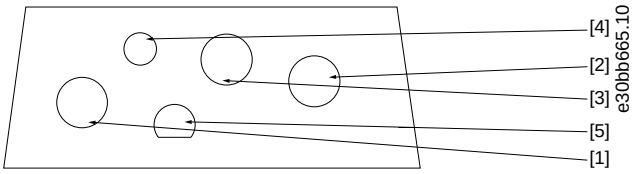

Table 32: Dimensions of Entry Holes for Enclosure Size A4, IP55/UL Type 12 Threaded Gland Holes

Hole number and recommended use	Metric thread size
1) Mains	M25
2) Motor	M25
3) Brake/loadsharing	M25
4) Control cable	M16
5) Control cable	M20

9.3.3.5 Entry Holes, Enclosure Size A5, IP55/UL Type 12

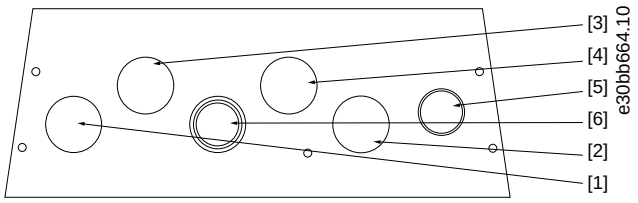

Table 33: Dimensions of Entry Holes for Enclosure Size A5, IP55/UL Type 12

Hole number and recommended use	Dimensions[1]		Nearest metric
	UL [in]	[mm]	
1) Mains	3/4	28.4	M25
2) Motor	3/4	28.4	M25
3) Brake/loadsharing	3/4	28.4	M25
4) Control cable	3/4	28.4	M25
5) Control cable[2]	3/4	28.4	M25
6) Control cable[2]	3/4	28.4	M25

[1] Tolerance ±0.2 mm.

[2] Knockout hole.

9.3.3.6 Entry Holes, Enclosure Size A5, IP55/UL Type 12 Threaded Gland Holes

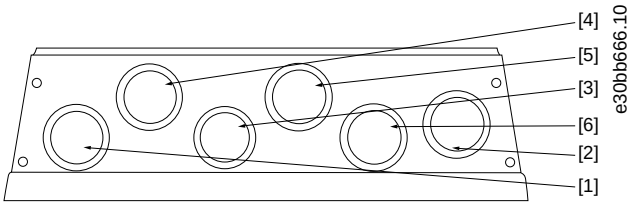

Table 34: Dimensions of Entry Holes for Enclosure Size A5, IP55/UL Type 12 Threaded Gland Holes

Hole number and recommended use	Metric thread size
1) Mains	M25
2) Motor	M25
3) Brake/loadsharing	28.4 mm[1]
4) Control cable	M25
5) Control cable	M25
6) Control cable	M25

[1] Knockout hole

9.3.3.7 Entry Holes, Enclosure Size B1, IP21/UL Type 1

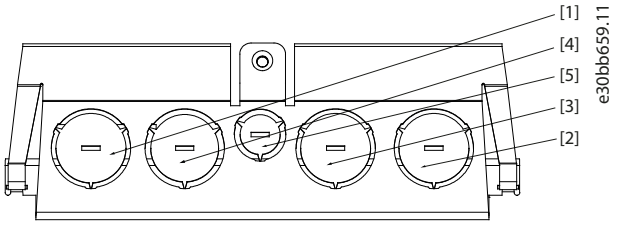

Table 35: Dimensions of Entry Holes for Enclosure Size B1, IP21/UL Type 1

Hole number and recommended use	Dimensions[1]		Nearest metric
	UL [in]	[mm]	
1) Mains	1	34.7	M32
2) Motor	1	34.7	M32
3) Brake/loadsharing	1	34.7	M32
4) Control cable	1	34.7	M32
5) Control cable	1/2	22.5	M20

[1] Tolerance ±0.2 mm.

9.3.3.8 Entry Holes, Enclosure Size B1, IP55/UL Type 12

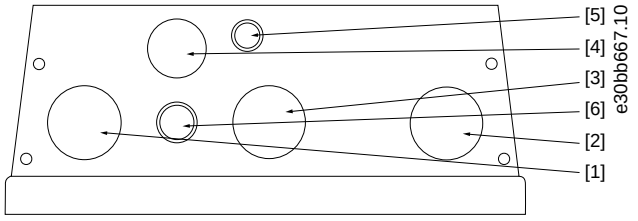

Table 36: Dimensions of Entry Holes for Enclosure Size B1, IP55/UL Type 12

Hole number and recommended use	Dimensions[1]		Nearest metric
	UL [in]	[mm]	
1) Mains	1	34.7	M32
2) Motor	1	34.7	M32
3) Brake/loadsharing	1	34.7	M32
4) Control cable	3/4	28.4	M25
5) Control cable	1/2	22.5	M20
6) Control cable[2]	1/2	22.5	M20

[1] Tolerance ±0.2 mm.

[2] Knockout hole.

9.3.3.9 Entry Holes, Enclosure Size B1, IP55/UL Type 12 Threaded Gland Holes

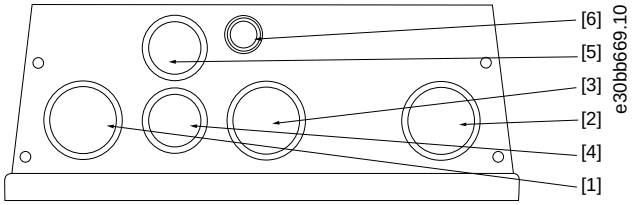

Table 37: Dimensions of Entry Holes for Enclosure Size B1, IP55/UL Type 12 Threaded Gland Holes

Hole number and recommended use	Metric thread size
1) Mains	M32
2) Motor	M32
3) Brake/loadsharing	M32
4) Control cable	M25
5) Control cable	M25
6) Control cable	22.5 mm[1]

[1] Knockout hole

9.3.3.10 Entry Holes, Enclosure Size B2, IP21/UL Type 1

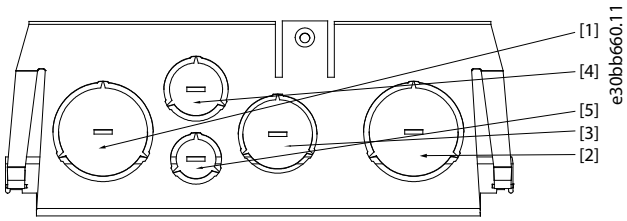

Table 38: Dimensions of Entry Holes for Enclosure Size B2, IP21/UL Type 1

Hole number and recommended use	Dimensions[1]		Nearest metric
	UL [in]	[mm]	
1) Mains	1 1/4	44.2	M40
2) Motor	1 1/4	44.2	M40
3) Brake/loadsharing	1	34.7	M32
4) Control cable	3/4	28.4	M25
5) Control cable	1/2	22.5	M20

[1] Tolerance ±0.2 mm.

9.3.3.11 Entry Holes, Enclosure Size B2, IP55/UL Type 12

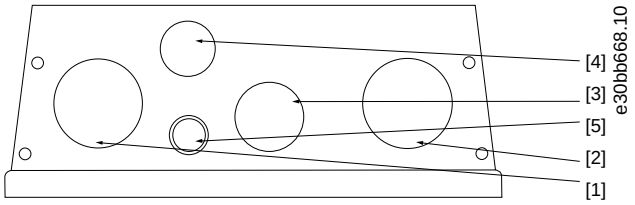

Table 39: Dimensions of Entry Holes for Enclosure Size B2, IP55/UL Type 12

Hole number and recommended use	Dimensions[1]		Nearest metric
	UL [in]	[mm]	
1) Mains	1 1/4	44.2	M40
2) Motor	1 1/4	44.2	M40
3) Brake/loadsharing	1	34.7	M32
4) Control cable	3/4	28.4	M25
5) Control cable[2]	1/2	22.5	M20

[1] Tolerance ±0.2 mm.

[2] Knockout hole.

9.3.3.12 Entry Holes, Enclosure Size B2, IP55/UL Type 12 Threaded Gland Holes

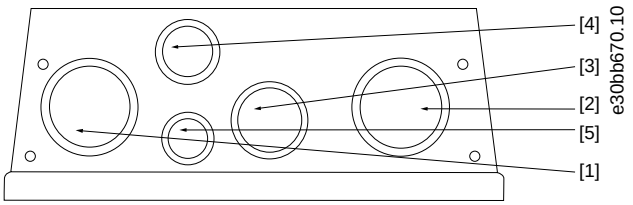

Table 40: Dimensions of Entry Holes for Enclosure Size B2, IP55/UL Type 12 Threaded Gland Holes

Hole number and recommended use	Metric thread size
1) Mains	M40
2) Motor	M40
3) Brake/loadsharing	M32
4) Control cable	M25
5) Control cable	M20

9.3.3.13 Entry Holes, Enclosure Size B3, IP21/UL Type 1

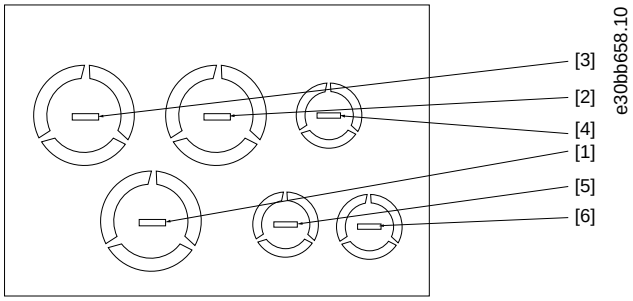

Table 41: Dimensions of Entry Holes for Enclosure Size B3, IP21/UL Type 1

Hole number and recommended use	Dimensions[1]		Nearest metric
	UL [in]	[mm]	
1) Mains	1	34.7	M32
2) Motor	1	34.7	M32
3) Brake/loadsharing	1	34.7	M32
4) Control cable	1/2	22.5	M20
5) Control cable	1/2	22.5	M20
6) Control cable	1/2	22.5	M20

[1] Tolerance ±0.2 mm.

9.3.3.14 Entry Holes, Enclosure Size C1, IP21/UL Type 1

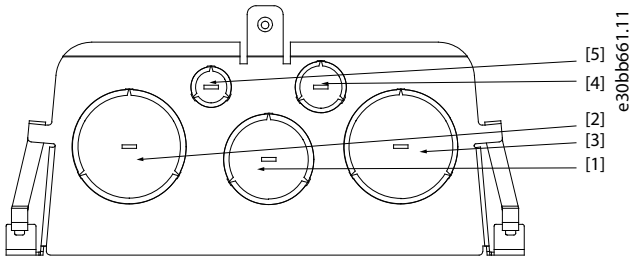

Table 42: Dimensions of Entry Holes for Enclosure Size C1, IP21/UL Type 1

Hole number and recommended use	Dimensions[1]		Nearest metric
	UL [in]	[mm]	
1) Mains	2	63.3	M63
2) Motor	2	63.3	M63
3) Brake/loadsharing	1 1/2	50.2	M50
4) Control cable	3/4	28.4	M25
5) Control cable	1/2	22.5	M20

[1] Tolerance ±0.2 mm.

9.3.3.15 Entry Holes, Enclosure Size C2, IP21/UL Type 1

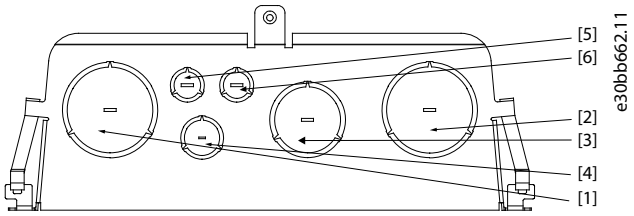

Table 43: Dimensions of Entry Holes for Enclosure Size C2, IP21/UL Type 1

Hole number and recommended use	Dimensions[1]		Nearest metric
	UL [in]	[mm]	
1) Mains	2	63.3	M63
2) Motor	2	63.3	M63
3) Brake/loadsharing	1 1/2	50.2	M50
4) Control cable	3/4	28.4	M25
5) Control cable	1/2	22.5	M20
6) Control cable	1/2	22.5	M20

[1] Tolerance ±0.2 mm.

9.3.4 Tightening Torques for Cover

Table 44: Tightening Torque Values [Nm]

Enclosure size	IP20	IP21	IP55	IP66
A1	(1)	(2)	(2)	(2)
A2	(1)	(1)	(2)	(2)
A3	(1)	(1)	(2)	(2)
A4/A5	(2)	(2)	2	2
B1	(2)	(1)	2.2	2.2
B2	(1)	(2)	2.2	2.2
B3	(1)	(2)	(2)	(2)
B4	(1)	(2)	(2)	(2)
C1	(2)	(1)	2.2	2.2
C2	(2)	(1)	2.2	2.2
C3	2	(2)	(2)	(2)
C4	2	(2)	(2)	(2)

[1] No screws to tighten.

[2] Does not exist.

9.4 Control Wiring and Terminals

9.4.1 Shielded Control Cables

Usually, the preferred method is to secure control and serial communication cables with shielding clamps provided at both ends to ensure the best possible high frequency cable contact.

If the ground potential between the drive and the PLC is different, electric noise could disturb the entire system. Solve this problem by fitting an equalizing cable as close as possible to the control cable. Minimum cable cross-section: 16 mm^2 (6 AWG).

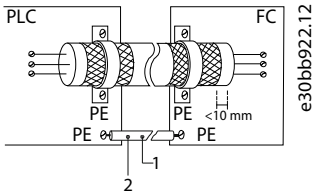

Illustration 63: Shielding Clamps at Both Ends

1	Minimum 16 mm^2 (6 AWG)
2	Equalizing cable

9.4.1.1 50/60 Hz Ground Loops

With long control cables, ground loops may occur. To eliminate ground loops, connect 1 end of the shield to the ground with a 100 nF capacitor (keeping leads short).

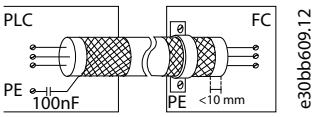

Illustration 64: Connection with a 100 nF Capacitor

9.4.1.2 Avoid EMC Noise on Serial Communication

This terminal is connected to ground via an internal RC link. Use twisted-pair cables to reduce interference between conductors. The recommended method is shown in the following illustration.

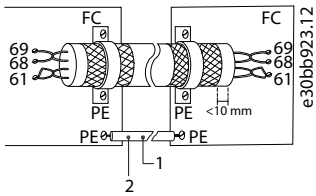

Illustration 65: Twisted-pair Cables

1	Minimum 16 mm^2 (6 AWG)
2	Equalizing cable

Alternatively, the connection to terminal 61 can be omitted.

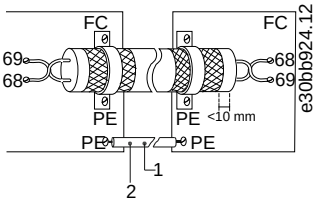

Illustration 66: Twisted-pair Cables without Terminal 61

1	Minimum 16 mm^2 (6 AWG)
2	Equalizing cable

9.4.2 Wiring to Control Terminals

N O T I C E

KEEP CONTROL CABLES AS SHORT AS POSSIBLE AND SEPARATE THEM FROM HIGH-POWER CABLES TO MINIMIZE INTERFERENCE.

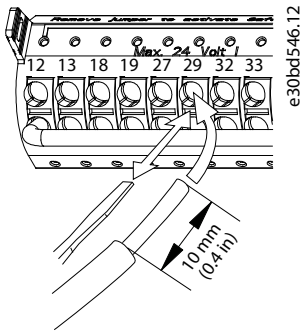

Illustration 67: Connecting Control Wires

9.4.3 Control Terminal Types

Find the location of the removable drive connectors in Illustration 68 and Illustration 69. Terminal functions and default settings are summarized in 9.4.4 Terminal Descriptions.

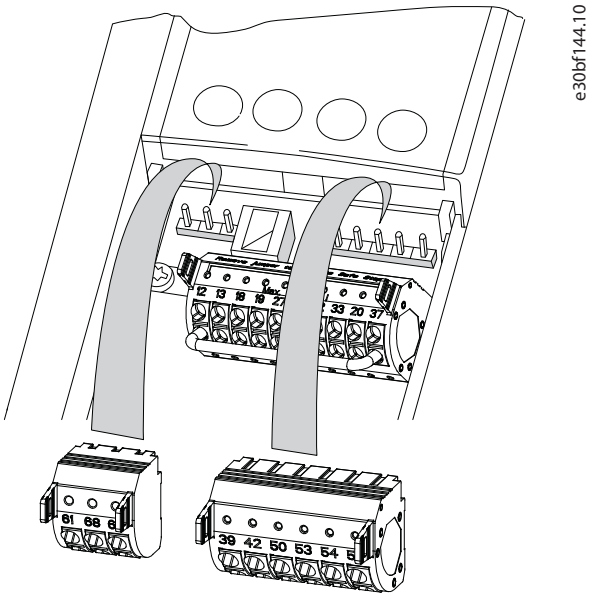

Illustration 68: Control Terminal Locations

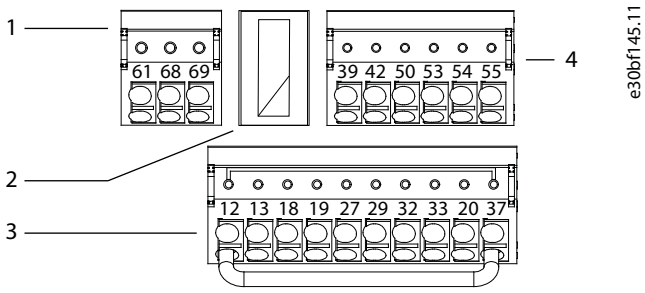

Illustration 69: Terminal Numbers on the Connectors

1	Serial communication connector	3	Digital input/output connector
2	USB port	4	Analog input/output connector

- Serial communication connector provides 2 terminals (+)68 and (-) 69 for an RS485 serial communication.
- USB port available for use with the MCT 10 Set-up Software.
- Digital input/output connector provides:
  - 4 programmable digital input terminals.
  - 2 additional digital terminals programmable as either input or output.
  - A 24 V DC terminal supply voltage.
  - A common for optional customer-supplied 24 V DC voltage.
- Analog input/output connector provides:
  - 2 analog inputs.
  - 1 analog output.
  - 10 V DC supply voltage.
  - Commons for the inputs and output.

9.4.4 Terminal Descriptions

Table 45: Digital Inputs/Outputs

Terminal	Parameter	Default setting	Description
12, 13	–	+24 V DC	+24 V DC supply voltage for digital inputs and external transducers. Maximum output current 200 mA for all 24 V loads.
18	*Parameter 5-10 Terminal 18 Digital Inputs*	*[8] Start*	Digital inputs
19	*Parameter 5-11 Terminal 19 Digital Inputs*	*[0] No operation*	
32	*Parameter 5-14 Terminal 32 Digital Input*	*[0] No operation*	
33	*Parameter 5-15 Terminal 33 Digital Input*	*[0] No operation*	
27	*Parameter 5-12 Terminal 27 Digital Input*	*[2] Coast inverse*	For digital input or output. Default setting is input.

Terminal	Parameter	Default setting	Description
29	*Parameter Terminal 29 Digital Input*	*[14] Jog*	
20	–	–	Common for digital inputs and 0 V potential for 24 V supply.
37	–	Safe Torque Off (STO)	Safe input (optional). Used for STO.

Table 46: Analog Inputs/Outputs

Terminal	Parameter	Default setting	Description
39	–	–	Common for analog output.
42	*Parameter 6-50 Terminal 42 Output*	Speed 0–high limit	Programmable analog output. 0–20 mA or 4–20 mA at a maximum of 500 Ω.
50	–	+10 V DC	10 V DC analog supply voltage potentiometer or thermistor. 15 mA maximum.
53	*Parameter group 6-1* Analog Input 1*	Reference	Analog input. For voltage or current. Switches A53 and A54 select mA or V.
54	*Parameter group 6-1* Analog Input 2*	Feedback	
55	–	–	Common for analog input.

Table 47: Serial Communication

Terminal	Parameter	Default setting	Description
61	–	–	Integrated RC-filter for cable shield. ONLY for connecting the shield if EMC problems occur.
68 (+)	*Parameter group 8-3* FC Port Settings*	–	RS485 interface. A control card switch is provided for termination resistance.
69 (-)	*Parameter group 8-3* FC Port Settings*	–	

Table 48: Relays

Terminal	Parameter	Default setting	Description
01, 02, 03	*Parameter 5-40 Function Relay [0]*	*[9] Alarm*	Form C relay output. For AC or DC voltage and resistive or inductive loads.
04, 05, 06	*Parameter 5-40 Function Relay [1]*	*[5] Running*	

Table 49: Additional Terminals

Terminal	Location
1 form C relay outputs	The location of the outputs depend on the drive configuration.
Terminals on built-in optional equipment	See the manual provided with the equipment option.

9.5 Fuses and Circuit Breakers

9.5.1 Fuse Recommendations

Fuses ensure that possible damage to the drive is limited to damage inside the unit. Danfoss recommends fuses and/or circuit breakers on the supply side as protection. For further information, see *Application Note Fuses and Circuit Breakers*.

NOTICE

Use of fuses on the supply side is mandatory for IEC 60364 (CE) and NEC 2009 (UL) compliant installations.

Recommendations

- gG type fuses.
- Moeller type circuit breakers. For other circuit breaker types, ensure that the energy into the drive is equal to or lower than the energy provided by Moeller types.

For further information, see *Application Note Fuses and Circuit Breakers*.

The recommended fuses in 9.5.2 CE Compliance, 9.5.3 UL Compliance (61800-5-1), and 9.5.4 UL Compliance (508C) are suitable for use on a circuit capable of 100000 A_{rms} (symmetrical), depending on the drive power and voltage rating. See the *Electrical Data* section for the short-circuit current rating (SCCR) based on the specific power and voltage rating of the drive.

9.5.2 CE Compliance

Table 50: 200–240 V, Enclosure Sizes A, B, and C

Enclosure	Power [kW (hp)]	Recommended fuse size	Recommended maximum fuse	Recommended circuit breaker Moeller	Maximum trip level [A]
A2	1.1–1.5 (1.5–2.0)	gG-10	gG-25	PKZM0-25	25
	2.2 (3.0)	gG-16			
A3	3.0 (4.0)	gG-16	gG-32	PKZM0-25	25
	3.7 (5.0)	gG-20			
A4	1.1–1.5 (1.5–2.0)	gG-10	gG-32	PKZM0-25	25
	2.2 (3.0)	gG-16			
A5	1.1–1.5 (1.5–2.0)	gG-10	gG-32	PKZM0-25	25
	2.2–3.0 (3.0–4.0)	gG-16			
	3.7 (5.0)	gG-20			
B1	5.5 (7.5)	gG-25	gG-80	PKZM4-63	63
	7.5–11 (10–15)	gG-32			
B2	15 (20)	gG-50	gG-100	NZMB1-A100	100
B3	5.5–7.5 (7.5–10)	gG-25	gG-63	PKZM4-50	50
	11 (15)	gG-32			
B4	15 (20)	gG-50	gG-125	NZMB1-A100	100
	18 (24)	gG-63			
C1	18 (24)	gG-63	gG-160	NZMB2-A200	160
	22 (30)	gG-80			
	30 (40)	gG-100	aR-160		

Enclosure	Power [kW (hp)]	Recommended fuse size	Recommended maximum fuse	Recommended circuit breaker Moeller	Maximum trip level [A]
C2	37 (50)	aR-160	aR-200	NZMB2-A250	250
	45 (60)	aR-200	aR-250		
C3	22 (30)	gG-80	gG-150	NZMB2-A200	150
	30 (40)	aR-125	aR-160		
C4	37 (50)	aR-160	aR-200	NZMB2-A250	250
	45 (60)	aR-200	aR-250		

Table 51: 380–480 V, Enclosure Sizes A, B, and C

Enclosure	Power [kW (hp)]	Recommended fuse size	Recommended maximum fuse	Recommended circuit breaker Moeller	Maximum trip level [A]
A2	1.1–3.0 (1.5–4.0)	gG-10	gG-25	PKZM0-25	25
	4.0 (5.0)	gG-16			
A3	5.5–7.5 (7.5–10.0)	gG-16	gG-32	PKZM0-25	25
A4	1.1–3.0 (1.5–4.0)	gG-10	gG-32	PKZM0-25	25
	4.0 (5.0)	gG-16			
A5	1.1–3.0 (1.5–4.0)	gG-10	gG-32	PKZM0-25	25
	4.0–7.5 (5.0–10.0)	gG-16			
B1	11–18 (15–24)	gG-40	gG-80	PKZM4-63	63
B2	22 (30)	gG-50	gG-100	NZMB1-A100	100
	30 (40)	gG-63			
B3	11–18 (15–24)	gG-40	gG-63	PKZM4-50	50
B4	22 (30)	gG-50	gG-125	NZMB1-A100	100
	30 (40)	gG-63			
	37 (50)	gG-80			
C1	37 (50)	gG-80	gG-160	NZMB2-A200	160
	45 (60)	gG-100			
	55 (75)	gG-160			
C2	75 (100)	aR-200	aR-250	NZMB2-A250	250
	90 (125)	aR-250			
C3	45 (60)	gG-100	gG-150	NZMB2-A200	150
	55 (75)	gG-160	gG-160		
C4	75 (100)	aR-200	aR-250	NZMB2-A250	250
	90 (125)	aR-250			

Table 52: 525–600 V, Enclosure Sizes A, B, and C

Enclosure	Power [kW (hp)]	Recommended fuse size	Recommended maximum fuse	Recommended circuit breaker Moeller	Maximum trip level [A]
A3	5.5 (7.5)	gG-10	gG-32	PKZM0-25	25
	7.5 (10)	gG-16			
A5	1.1 (1.5)	gG-10	gG-32	PKZM0-25	25
	7.5 (10)	gG-16			
B1	11 (15)	gG-25	gG-80	PKZM4-63	63
	15 (20)	gG-32			
	18.5 (25)	gG-40			
B2	22 (30)	gG-50	gG-100	NZMB1-A100	100
	30 (40)	gG-63			
B3	11 (15)	gG-25	gG-63	PKZM4-50	50
	15–18.5 (20–25)	gG-32			
B4	22 (30)	gG-40	gG-125	NZMB1-A100	100
	30 (40)	gG-50			
	37 (50)	gG-63			
C1	37 (50)	gG-63	gG-160	NZMB2-A200	160
	45 (60)	gG-100			
	55 (60)	aR-160	aR-250		
C2	75–90 (100–125)	aR-200	aR-250	NZMB2-A250	250
C3	45 (60)	gG-63	gG-150	NZMB2-A200	150
	55 (75)	gG-100			
C4	75 (100)	aR-160	aR-250	NZMB2-A250	250
	90 (125)	aR-200			

Table 53: 525–690 V, Enclosure Sizes A, B, and C

Enclosure	Power [kW (hp)]	Recommended fuse size	Recommended maximum fuse	Recommended circuit breaker Moeller	Maximum trip level [A]
A3	1.1 (1.5)	gG-6	gG-25	PKZM0-16	16
	1.5 (2.0)	gG-6	gG-25		
	2.2 (3.0)	gG-6	gG-25		
	3.0 (4.0)	gG-10	gG-25		
	4.0 (5.0)	gG-10	gG-25		
	5.5 (7.5)	gG-16	gG-25		
	7.5 (10)	gG-16	gG-25		

Enclosure	Power [kW (hp)]	Recommended fuse size	Recommended maximum fuse	Recommended circuit breaker Moeller	Maximum trip level [A]
B2/B4	11 (15)	gG-25	gG-63	–	–
	15 (20)	gG-32			
	18 (24)	gG-32			
	22 (30)	gG-40			
B4/C2	30 (40)	gG-63	gG-80	–	–
C2/C3	37 (50)	gG-63	gG-100	–	–
	45 (60)	gG-80	gG-125		
C2	55 (75)	gG-100	gG-160	–	–
	75 (100)	gG-125			

9.5.3 UL Compliance (61800-5-1)

Table 54: Recommended Fuse, 200–240 V and 115Y/200–139Y/240, Enclosure Sizes A2, A3, A5, B1, B2, and C1

Power [kW (hp)]	Class	Recommended	Verified with
1.1 (1.5)	J/T/CC	10 A	A2: class J, 20 A A5: class J, 30 A
1.5 (2.0)	J/T/CC	15 A	A2: class J, 20 A A5: class J, 30 A
2.2 (3.0)	J/T/CC	20 A	A2: class J, 20 A A5: class J, 30 A
3.0 (4.0)	J/T/CC	25 A	A3: class J, 30 A A5: class J, 30 A
3.7 (5.0)	J/T/CC	30 A	A3: class J, 30 A A5: class J, 30 A
5.5–7.5 (7.5–10)	J/T/CC	50 A	B1: class J, 60 A
11 (15)	J/T/CC	60 A	B1: class J, 60 A
15 (20)	J/T	80 A	B2: class J, 80 A
18.5–22 (25–30)	J/T	125 A	C1: class J, 150 A
30 (40)	J/T	150 A	C1: class J, 150 A

Table 55: Recommended Fuse, 380–480 V and 220Y/380–277Y/480, Enclosure Sizes A2, A3, A5, B1, B2, and C1

Power [kW (hp)]	Class	Recommended	Verified with
1.1 (1.5)	J/T/CC	6 A	A2: class J, 10 A A5: class J, 30 A
1.5–2.2 (2.0–3.0)	J/T/CC	10 A	A2: class J, 20 A

Power [kW (hp)]	Class	Recommended	Verified with
			A5: class J, 30 A
3.0 (4.0)	J/T/CC	15 A	A2: class J, 20 A A5: class J, 30 A
4.0 (5.0)	J/T/CC	20 A	A2: class J, 20 A A5: class J, 30 A
5.5 (7.5)	J/T/CC	25 A	A3: class J, 30 A A5: class J, 30 A
7.5 (10)	J/T/CC	30 A	A3: class J, 30 A A5: class J, 30 A
11–15 (15–20)	J/T/CC	40 A	B2: class J, 50 A
18.5 (25)	J/T/CC	50 A	B1: class J, 50 A
22 (30)	J/T/CC	60 A	B2: class J, 80 A
30 (40)	J/T	80 A	B2: class J, 80 A
37 (50)	J/T	100 A	C1: class J, 150 A
45 (60)	J/T	125 A	C1: class J, 150 A
55 (75)	J/T	150 A	C1: class J, 150 A

9.5.4 UL Compliance (508C)

Table 56: Recommended Maximum Fuse, 200–240 V, Enclosure Sizes A, B, and C

Power [kW (hp)]	Bussmann Type RK1[1]	Bussmann Type J	Bussmann Type T	Bussmann Type CC	Bussmann Type CC	Bussmann Type CC
1.1 (1.5)	KTN-R-10	JKS-10	JJN-10	FNQ-R-10	KTK-R-10	LP-CC-10
1.5 (2.0)	KTN-R-15	JKS-15	JJN-15	FNQ-R-15	KTK-R-15	LP-CC-15
2.2 (3.0)	KTN-R-20	JKS-20	JJN-20	FNQ-R-20	KTK-R-20	LP-CC-20
3.0 (4.0)	KTN-R-25	JKS-25	JJN-25	FNQ-R-25	KTK-R-25	LP-CC-25
3.7 (5.0)	KTN-R-30	JKS-30	JJN-30	FNQ-R-30	KTK-R-30	LP-CC-30
5.5–7.5 (7.5–10)	KTN-R-50	KS-50	JJN-50	–	–	–
11 (15)	KTN-R-60	JKS-60	JJN-60	–	–	–
15 (20)	KTN-R-80	JKS-80	JJN-80	–	–	–
18.5–22 (25–30)	KTN-R-125	JKS-125	JJN-125	–	–	–
30 (40)	KTN-R-150	JKS-150	JJN-150	–	–	–
37 (50)	KTN-R-200	JKS-200	JJN-200	–	–	–
45 (60)	KTN-R-250	JKS-250	JJN-250	–	–	–

[1] KTS-fuses from Bussmann may substitute KTN for 240 V drives.

Table 57: Recommended Maximum Fuse, 200–240 V, Enclosure Sizes A, B, and C

Power [kW (hp)]	SIBA Type RK1	Littelfuse Type RK1	Ferraz Shawmut Type CC	Ferraz Shawmut Type RK1[1]	Bussmann Type JFHR2[2]	Littelfuse JFHR2	Ferraz Shawmut JFHR2[3]	Ferraz Shawmut J
1.1 (1.5)	5017906-010	KLN-R-10	ATM-R-10	A2K-10-R	FWX-10	–	–	HSJ-10
1.5 (2.0)	5017906-016	KLN-R-15	ATM-R-15	A2K-15-R	FWX-15	–	–	HSJ-15
2.2 (3.0)	5017906-020	KLN-R-20	ATM-R-20	A2K-20-R	FWX-20	–	–	HSJ-20
3.0 (4.0)	5017906-025	KLN-R-25	ATM-R-25	A2K-25-R	FWX-25	–	–	HSJ-25
3.7 (5.0)	5012406-032	KLN-R-30	ATM-R-30	A2K-30-R	FWX-30	–	–	HSJ-30
5.5–7.5 (7.5–10)	5014006-050	KLN-R-50	–	A2K-50-R	FWX-50	–	–	HSJ-50
11 (15)	5014006-063	KLN-R-60	–	A2K-60-R	FWX-60	–	–	HSJ-60
15 (20)	5014006-080	KLN-R-80	–	A2K-80-R	FWX-80	–	–	HSJ-80
18.5–22 (25–30)	2028220-125	KLN-R-125	–	A2K-125-R	FWX-125	–	–	HSJ-125
30 (40)	2028220-150	KLN-R-150	–	A2K-150-R	FWX-150	L25S-150	A25X-150	HSJ-150
37 (50)	2028220-200	KLN-R-200	–	A2K-200-R	FWX-200	L25S-200	A25X-200	HSJ-200
45 (60)	2028220-250	KLN-R-250	–	A2K-250-R	FWX-250	L25S-250	A25X-250	HSJ-250

[1] A6KR-fuses from Ferraz Shawmut may substitute A2KR for 240 V drives.

[2] FWH-fuses from Bussmann may substitute FWX for 240 V drives.

[3] A50X-fuses from Ferraz Shawmut may substitute A25X for 240 V drives.

Table 58: Recommended Maximum Fuse, 380–480 V, Enclosure Sizes A, B, and C

Power [kW (hp)]	Bussmann Type RK1	Bussmann Type J	Bussmann Type T	Bussmann Type CC	Bussmann Type CC	Bussmann Type CC
1.1 (1.5)	KTS-R-6	JKS-6	JJS-6	FNQ-R-6	KTK-R-6	LP-CC-6
1.5–2.2 (2.0–3.0)	KTS-R-10	JKS-10	JJS-10	FNQ-R-10	KTK-R-10	LP-CC-10
3.0 (4.0)	KTS-R-15	JKS-15	JJS-15	FNQ-R-15	KTK-R-15	LP-CC-15
4.0 (5.0)	KTS-R-20	JKS-20	JJS-20	FNQ-R-20	KTK-R-20	LP-CC-20
5.5 (7.5)	KTS-R-25	JKS-25	JJS-25	FNQ-R-25	KTK-R-25	LP-CC-25
7.5 (10)	KTS-R-30	JKS-30	JJS-30	FNQ-R-30	KTK-R-30	LP-CC-30
11–15 (15–20)	KTS-R-40	JKS-40	JJS-40	–	–	–
18.5 (25)	KTS-R-50	JKS-50	JJS-50	–	–	–
22 (30)	KTS-R-60	JKS-60	JJS-60	–	–	–
30 (40)	KTS-R-80	JKS-80	JJS-80	–	–	–
37 (50)	KTS-R-100	JKS-100	JJS-100	–	–	–
45 (60)	KTS-R-125	JKS-125	JJS-125	–	–	–

Power [kW (hp)]	Bussmann Type RK1	Bussmann Type J	Bussmann Type T	Bussmann Type CC	Bussmann Type CC	Bussmann Type CC
55 (75)	KTS-R-150	JKS-150	JJS-150	–	–	–
75 (100)	KTS-R-200	JKS-200	JJS-200	–	–	–
90 (125)	KTS-R-250	JKS-250	JJS-250	–	–	–

Table 59: Recommended Maximum Fuse, 380–480 V, Enclosure Sizes A, B, and C

Power [kW (hp)]	SIBA Type RK1	Littelfuse Type RK1	Ferraz Shawmut Type CC	Ferraz Shawmut Type RK1	Bussmann JFHR2	Ferraz Shawmut J	Ferraz Shawmut JFHR2[(1)]	Littelfuse JFHR2
1.1 (1.5)	5017906-006	KLS-R-6	ATM-R-6	A6K-6-R	FWH-6	HSJ-6	–	–
1.5–2.2 (2.0–3.0)	5017906-010	KLS-R-10	ATM-R-10	A6K-10-R	FWH-10	HSJ-10	–	–
3.0 (4.0)	5017906-016	KLS-R-15	ATM-R-15	A6K-15-R	FWH-15	HSJ-15	–	–
4.0 (5.0)	5017906-020	KLS-R-20	ATM-R-20	A6K-20-R	FWH-20	HSJ-20	–	–
5.5 (7.5)	5017906-025	KLS-R-25	ATM-R-25	A6K-25-R	FWH-25	HSJ-25	–	–
7.5 (10)	5012406-032	KLS-R-30	ATM-R-30	A6K-30-R	FWH-30	HSJ-30	–	–
11–15 (15–20)	5014006-040	KLS-R-40	–	A6K-40-R	FWH-40	HSJ-40	–	–
18.5 (25)	5014006-050	KLS-R-50	–	A6K-50-R	FWH-50	HSJ-50	–	–
22 (30)	5014006-063	KLS-R-60	–	A6K-60-R	FWH-60	HSJ-60	–	–
30 (40)	2028220-100	KLS-R-80	–	A6K-80-R	FWH-80	HSJ-80	–	–
37 (50)	2028220-125	KLS-R-100	–	A6K-100-R	FWH-100	HSJ-100	–	–
45 (60)	2028220-125	KLS-R-125	–	A6K-125-R	FWH-125	HSJ-125	–	–
55 (75)	2028220-160	KLS-R-150	–	A6K-150-R	FWH-150	HSJ-150	–	–
75 (100)	2028220-200	KLS-R-200	–	A6K-200-R	FWH-200	HSJ-200	A50-P-225	L50-S-225
90 (125)	2028220-250	KLS-R-250	–	A6K-250-R	FWH-250	HSJ-250	A50-P-250	L50-S-250

[1] Ferraz Shawmut A50QS fuses may substitute for A50P fuses.

Table 60: Recommended Maximum Fuse, 525–600 V, Enclosure Sizes A, B, and C

Power [kW (hp)	Bussmann Type RK1	Bussmann Type J	Bussmann Type T	Bussmann Type CC	Bussmann Type CC	Bussmann Type CC	SIBA Type RK1	Littelfuse Type RK1	Ferraz Shawmut Type RK1	Ferraz Shawmut J
1.1 (1.5)	KTS-R-5	JKS-5	JJS-6	FNQ-R-5	KTK-R-5	LP-CC-5	5017906-005	KLS-R-005	A6K-5-R	HSJ-6
1.5–2.2 (2.0–3.0)	KTS-R-10	JKS-10	JJS-10	FNQ-R-10	KTK-R-10	LP-CC-10	5017906-010	KLS-R-010	A6K-10-R	HSJ-10

Power [kW (hp)	Buss-mann Type RK1	Buss-mann Type J	Buss-mann Type T	Buss-mann Type CC	Buss-mann Type CC	Buss-mann Type CC	SIBA Type RK1	Littel-fuse Type RK1	Ferraz Shawmut Type RK1	Ferraz Shaw-mut J
3.0 (4.0)	KTS-R15	JKS-15	JJS-15	FNQ-R-15	KTK-R-15	LP-CC-15	5017906-016	KLS-R-015	A6K-15-R	HSJ-15
4.0 (5.0)	KTS-R20	JKS-20	JJS-20	FNQ-R-20	KTK-R-20	LP-CC-20	5017906-020	KLS-R-020	A6K-20-R	HSJ-20
5.5 (7.5)	KTS-R-25	JKS-25	JJS-25	FNQ-R-25	KTK-R-25	LP-CC-25	5017906-025	KLS-R-025	A6K-25-R	HSJ-25
7.5 (10.0)	KTS-R-30	JKS-30	JJS-30	FNQ-R-30	KTK-R-30	LP-CC-30	5017906-030	KLS-R-030	A6K-30-R	HSJ-30
11–15 (15–20)	KTS-R-35	JKS-35	JJS-35	–	–	–	5014006-040	KLS-R-035	A6K-35-R	HSJ-35
18.5 (25)	KTS-R-45	JKS-45	JJS-45	–	–	–	5014006-050	KLS-R-045	A6K-45-R	HSJ-45
22 (30)	KTS-R-50	JKS-50	JJS-50	–	–	–	5014006-050	KLS-R-050	A6K-50-R	HSJ-50
30 (40)	KTS-R-60	JKS-60	JJS-60	–	–	–	5014006-063	KLS-R-060	A6K-60-R	HSJ-60
37 (50)	KTS-R-80	JKS-80	JJS-80	–	–	–	5014006-080	KLS-R-075	A6K-80-R	HSJ-80
45 (60)	KTS-R-100	JKS-100	JJS-100	–	–	–	5014006-100	KLS-R-100	A6K-100-R	HSJ-100
55 (75)	KTS-R-125	JKS-125	JJS-125	–	–	–	2028220-125	KLS-R-125	A6K-125-R	HSJ-125
75 (100)	KTS-R-150	JKS-150	JJS-150	–	–	–	2028220-150	KLS-R-150	A6K-150-R	HSJ-150
90 (125)	KTS-R-175	JKS-175	JJS-175	–	–	–	2028220-200	KLS-R-175	A6K-175-R	HSJ-175

Table 61: Recommended Maximum Fuse, 525–690 V, Enclosure Sizes A, B, and C

Power [kW (hp)]	Bussmann Type RK1	Bussmann Type J	Bussmann Type T	Bussmann Type CC	Bussmann Type CC	Bussmann Type CC
1.1 (1.5)	KTS-R-5	JKS-5	JJS-6	FNQ-R-5	KTK-R-5	LP-CC-5
1.5–2.2 (2.0–3.0)	KTS-R-10	JKS-10	JJS-10	FNQ-R-10	KTK-R-10	LP-CC-10
3.0 (4.0)	KTS-R15	JKS-15	JJS-15	FNQ-R-15	KTK-R-15	LP-CC-15
4.0 (5.0)	KTS-R20	JKS-20	JJS-20	FNQ-R-20	KTK-R-20	LP-CC-20
5.5 (7.5)	KTS-R-25	JKS-25	JJS-25	FNQ-R-25	KTK-R-25	LP-CC-25
7.5 (10)	KTS-R-30	JKS-30	JJS-30	FNQ-R-30	KTK-R-30	LP-CC-30
11–15 (15–20)	KTS-R-35	JKS-35	JJS-35	–	–	–
18.5 (25)	KTS-R-45	JKS-45	JJS-45	–	–	–

Power [kW (hp)]	Bussmann Type RK1	Bussmann Type J	Bussmann Type T	Bussmann Type CC	Bussmann Type CC	Bussmann Type CC
22 (30)	KTS-R-50	JKS-50	JJS-50	–	–	–
30 (40)	KTS-R-60	JKS-60	JJS-60	–	–	–
37 (50)	KTS-R-80	JKS-80	JJS-80	–	–	–
45 (60)	KTS-R-100	JKS-100	JJS-100	–	–	–
55 (75)	KTS-R-125	JKS-125	JJS-125	–	–	–
75 (100)	KTS-R-150	JKS-150	JJS-150	–	–	–
90 (125)	KTS-R-175	JKS-175	JJS-175	–	–	–

Table 62: Recommended Maximum Fuse, 525–690 V, Enclosure Sizes B, and C

Power [kW (hp)]	Maximum prefuse [A]	Bussmann E52273 RK1/JDDZ	Bussmann E4273 J/JDDZ	Bussmann E4273 T/JDDZ	SIBA E180276 RK1/JDDZ	Littelfuse E81895 RK1/JDDZ	Ferraz Shawmut E163267/E2137 RK1/JDDZ	Ferraz Shawmut E2137 J/HSJ
11–15 (15–20)	30	KTS-R-30	JKS-30	JKJS-30	5017906-030	KLS-R-030	A6K-30-R	HST-30
18.5 (25.0)	45	KTS-R-45	JKS-45	JJS-45	5014006-050	KLS-R-045	A6K-45-R	HST-45
30 (40)	60	KTS-R-60	JKS-60	JJS-60	5014006-063	KLS-R-060	A6K-60-R	HST-60
37 (50)	80	KTS-R-80	JKS-80	JJS-80	5014006-080	KLS-R-075	A6K-80-R	HST-80
45 (60)	90	KTS-R-90	JKS-90	JJS-90	5014006-100	KLS-R-090	A6K-90-R	HST-90
55 (75)	100	KTS-R-100	JKS-100	JJS-100	5014006-100	KLS-R-100	A6K-100-R	HST-100
75 (100)	125	KTS-R-125	JKS-125	JJS-125	2028220-125	KLS-150	A6K-125-R	HST-125
90 (125)	150	KTS-R-150	JKS-150	JJS-150	2028220-150	KLS-175	A6K-150-R	HST-150

9.6 Disconnects and Contactors

Assembling of IP55/UL Type 12 (enclosure size A5) with mains disconnector.

The mains switch is on the left side of enclosure sizes B1, B2, C1, and C2. The mains switch on A5 enclosures is on the right side.

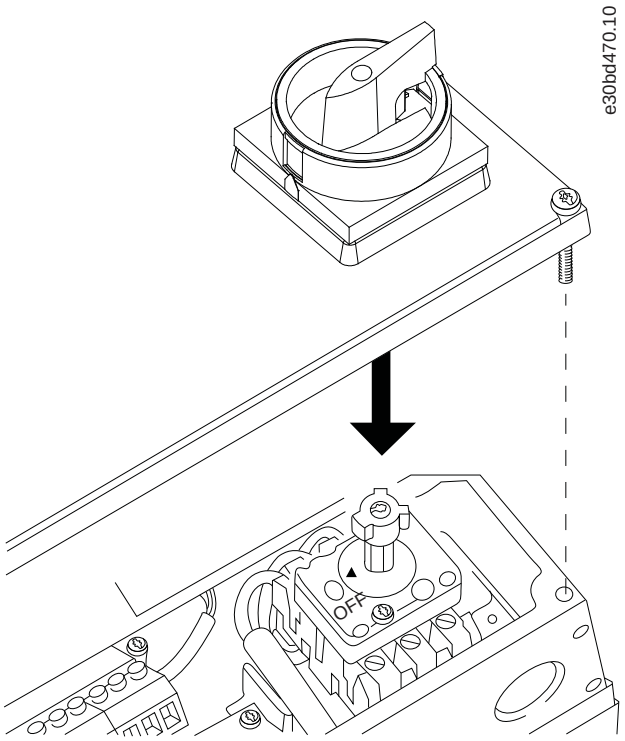

Illustration 70: Location of Mains Switch (Enclosure Size A5)

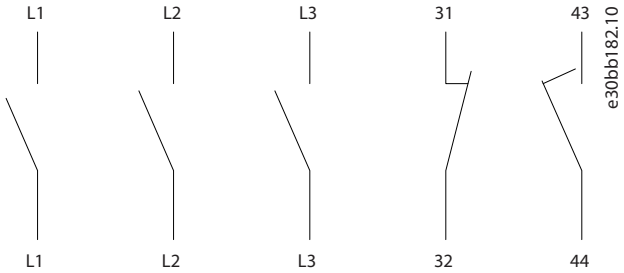

Illustration 71: Terminal Connections for A5, B1, and B2

Enclosure size	Type
A5	Kraus&Naimer KG20A T303
B1/B2	Kraus&Naimer KG64 T303

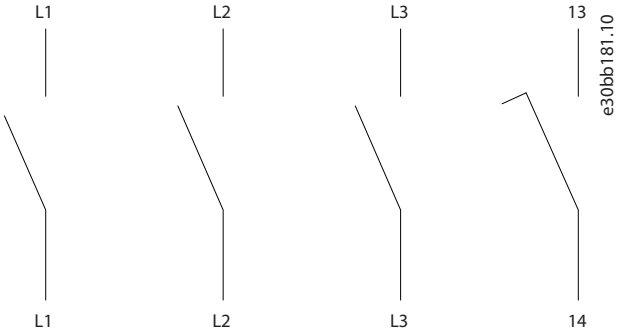

Illustration 72: Terminal Connections for C1 and C2

Enclosure size	Type
C1, 37 kW	Kraus&Naimer KG100 T303
C1, 45–55 kW	Kraus&Naimer KG105 T303
C2, 75 kW	Kraus&Naimer KG160 T303
C2, 90 kW	Kraus&Naimer KG250 T303

9.7 Motor

9.7.1 Motor Thermal Protection

Motor thermal protection can be provided via:

- Direct temperature sensing using a
  - PTC- or KTY sensor in the motor windings and connected on a standard AI or DI.
  - PT100 or PT1000 in the motor windings and motor bearings, connected on VLT® Sensor Input Card MCB 114 and VLT® Programmable I/O MCB 115.
  - PTC thermistor input on VLT® PTC Thermistor Card MCB 112 (ATEX-approved).
- Mechanical thermal switch (Klixon type) on a DI.
- Built-in electronic relay (ETR).

ETR calculates motor temperature by measuring current, frequency, and operating time. The drive shows the thermal load on the motor in percentage and can issue a warning at a programmable overload setpoint. Programmable options at the overload allow the drive to stop the motor, reduce output, or ignore the condition. Even at low speeds, the drive meets I2t Class 20 electronic motor overload standards.

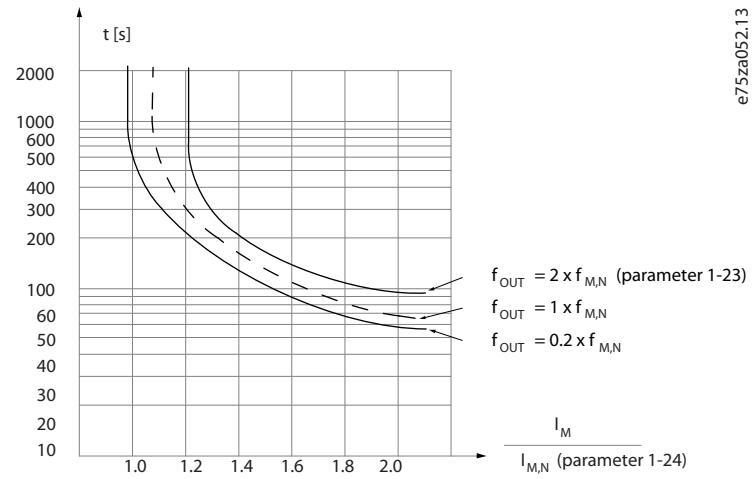

Illustration 73: ETR Characteristics

The X-axis shows the ratio between I_{motor} and I_{motor} nominal. The Y-axis shows the time in seconds before the ETR cuts off and trips the drive. The curves show the characteristic nominal speed at twice the nominal speed and at 0.2 x the nominal speed. At lower speed, the ETR cuts off at lower heat due to less cooling of the motor. In that way, the motor is protected from being overheated even at low speed. The ETR feature calculates the motor temperature based on actual current and speed. The calculated temperature is visible as a readout parameter in *parameter 16-18 Motor Thermal*. A special version of the ETR is also available for EX-e or EX-n motors in ATEX areas. This function makes it possible to enter a specific curve to protect the Ex-e motor. See the Programming Guide for setup instructions.

9.7.2 Parallel Connection of Motors

The drive can control several parallel-connected motors. When using parallel motor connection, observe the following:

- Recommended to run applications with parallel motors in U/F mode *parameter 1-01 Motor Control Principle* [0]. Set the U/F graph in *parameter 1-55 U/f Characteristic - U* and *parameter 1-56 U/f Characteristic - F*.
- VCC+ mode may be used in some applications.

- The total current consumption of the motors must not exceed the rated output current I_{INV} for the drive.
- If motor sizes are widely different in winding resistance, starting problems may occur due to too low motor voltage at low speed.
- The electronic thermal relay (ETR) of the drive cannot be used as motor overload protection for the individual motor. Provide further motor overload protection by including thermistors in each motor winding or individual thermal relays.

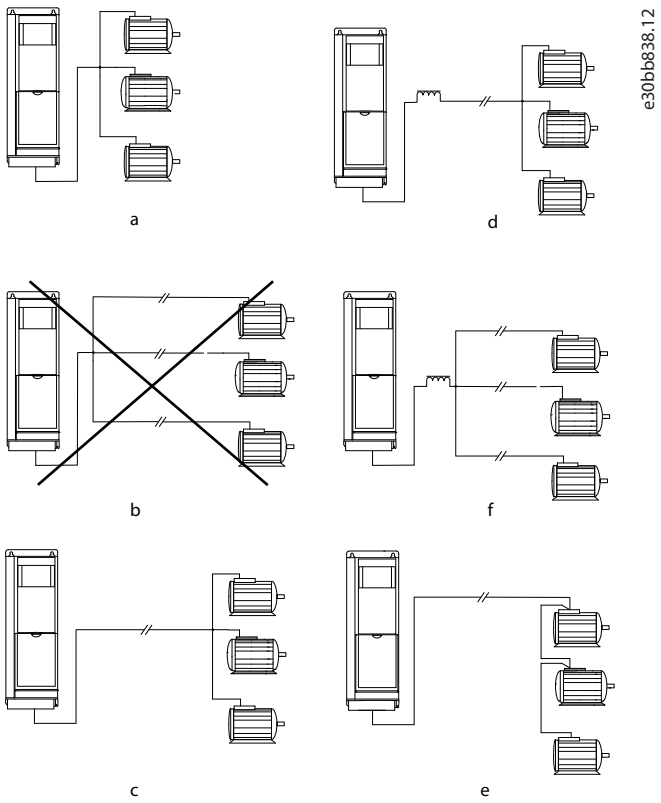

Illustration 74: Different Parallel Connections of Motors

A	Installations with cables connected in a common joint as shown in A and B are only recommended for short cable lengths.	D	Consider voltage drop across the motor cables.
B	Be aware of the maximum motor cable length specified in the *Electrical Data section*.	E	Consider voltage drop across the motor cables.
C	The total motor cable length specified in the *Electrical Data section* is valid as long as the parallel cables are kept short, less than 10 m (32 ft) each.	F	The total motor cable length specified in the *Electrical Data section* is valid as long as the parallel cables are kept short, less than 10 m (32 ft) each.

Table 63: Maximum Cable Lengths

Enclosure sizes	Power size [kW (hp)]	Voltage [V]	1 cable [m (ft)]	2 cables [m (ft)]	3 cables [m (ft)]	4 cables [m (ft)]
A1, A2, A4, A5	0.37–0.75 (0.5–1.0)	400	150 (492)	45 (147.6)	8.0 (26)	6.0 (19.7)
		500	150 (492)	7.0 (23)	4.0 (13)	3.0 (9.8)
A2, A4, A5	1.1–1.5 (1.5–2.0)	400	150 (492)	45 (147.6)	20 (65.6)	8.0 (26)
		500	150 (492)	45 (147.6)	5.0 (16.4)	4.0 (13)
A2, A4, A5	2.2–4.0 (3.0–5.0)	400	150 (492)	45 (147.6)	20 (65.6)	11 (36)

Enclosure sizes	Power size [kW (hp)]	Voltage [V]	1 cable [m (ft)]	2 cables [m (ft)]	3 cables [m (ft)]	4 cables [m (ft)]
		500	150 (492)	45 (147.6)	20 (65.6)	6.0 (19.7)
A3, A4, A5	5.5–7.5 (7.5–10)	400	150 (492)	45 (147.6)	20 (65.6)	11 (36)
		500	150 (492)	45 (147.6)	20 (65.6)	11 (36)
B1, B2, B3, B4, C1, C2, C3, C4	11–90 (15–110)	400	150 (492)	75 (246)	50 (164)	37 (121.4)
		500	150 (492)	75 (246)	50 (164)	37 (121.4)
A3	1.1–7.5 (1.5–10)	525–690	100 (382)	50 (164)	33 (108)	25 (82)
B4	11–30 (15–40)	525–690	150 (492)	75 (246)	50 (164)	37 (121.4)
C3	37–45 (50–60)	525–690	150 (492)	75 (246)	50 (164)	37 (121.4)

9.7.3 Motor Insulation

Modern motors for use with drives have a high degree of insulation to account for new generation high-efficiency IGBTs with high dU/dt. For retrofit in old motors, confirm the motor insulation or mitigate with dU/dt filter or, if necessary, a sine-wave filter.

For motor cable lengths ≤ the maximum cable length listed in the *Electrical Data section*, the motor insulation ratings listed in Table 64 are recommended. If a motor has lower insulation rating, use a dU/dt or sine-wave filter.

Table 64: Motor Insulation Ratings

Nominal mains voltage [V]	Motor insulation [V]
$U_N \leq 420$	Standard U_{LL}=1300
$420\ V < U_N \leq 500$	Reinforced U_{LL}=1600
$500\ V < U_N \leq 600$	Reinforced U_{LL}=1800
$600\ V < U_N \leq 690$	Reinforced U_{LL}=2000

9.7.4 Motor Bearing Currents

To minimize DE (Drive End) bearing and shaft currents, ground the drive, motor, driven machine, and motor to the driven machine properly. For more information, refer to the *Minimizing Bearing Failures in AC Drive Systems User Guide*.

Standard mitigation strategies

- Use an insulated bearing.
- Apply rigorous installation procedures:
  - Ensure that the motor and load motor are aligned.
  - Strictly follow the EMC Installation guideline.
  - Reinforce the PE so the high-frequency impedance is lower in the PE than the input power leads.
  - Provide a good high-frequency connection between the motor and the drive. For example, use a shielded cable that has a 360° connection in the motor and the drive.
  - Make sure that the impedance from the drive to the building ground is lower than the grounding impedance of the machine. This setup can be difficult for pumps.
  - Make a direct ground connection between the motor and load motor.
- Lower the IGBT switching frequency.
- Modify the inverter waveform, 60° AVM vs. SFAVM.
- Install a shaft grounding system or use an isolating coupling.
- Apply conductive lubrication.

- Use minimum speed settings if possible.
- Try to ensure that the mains voltage is balanced to ground. This setup can be difficult for IT, TT, TN-CS, or Grounded leg systems.

9.8 Braking

9.8.1 Selection of Brake Resistor

To handle higher demands by regenerative braking, a brake resistor is necessary. Using a brake resistor ensures that the energy is absorbed in the brake resistor and not in the drive. For more information, see the VLT® Brake Resistor MCE 101 Design Guide.

If the amount of kinetic energy transferred to the resistor in each braking period is not known, the average power can be calculated based on the cycle time and braking time, also called intermittent duty cycle. The resistor intermittent duty cycle is an indication of the duty cycle at which the resistor is active. See Illustration 75 for a typical braking cycle.

N O T I C E

Motor suppliers often use S5 when stating the allowed load, which is an expression of intermittent duty cycle.

The intermittent duty cycle for the resistor is calculated as follows:

Duty cycle=t_b /T

T=cycle time in s.

t_b is the braking time in s (of the cycle time).

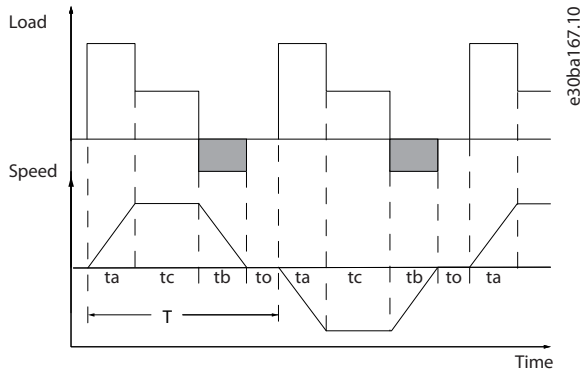

Illustration 75: Dynamic Braking Cycle Time

Brake resistors have a duty cycle of 5%, 10%, and 40%. If a 10% duty cycle is applied, the brake resistors are able to absorb brake power for 10% of the cycle time. The remaining 90% of the cycle time is spent on dissipating excess heat.

Table 65: Braking at High Overload Torque Level

	Cycle time (s)	Braking duty cycle at 100% torque	Braking duty cycle at overtorque (150/160%)
200–240 V			
PK25–P11K	120	Continuous	40%
P15K–P37K	300	10%	10%
380–500 V			
PK37–P75K	120	Continuous	40%
P90K–P160	600	Continuous	10%
P200–P800	600	40%	10%
525–600 V			
PK75–P75K	120	Continuous	40%

	Cycle time (s)	Braking duty cycle at 100% torque	Braking duty cycle at overtorque (150/160%)
525–690 V			
P37K–400	600	40%	10%
P500–P560	600	40%[1]	10%[2]
P630–P1M0	600	40%	10%

[1] 500 kW at 86% braking torque/560 kW at 76% brake power.

[2] 500 kW at 130% braking torque/560 kW at 115% brake power.

NOTICE

Ensure that the resistor is designed to handle the required braking time.

The maximum allowed load on the brake resistor is stated as a peak power at a given intermittent duty cycle and can be calculated as:

$$R_{br}\,[\Omega] = \frac{U_{dc}^2}{P_{peak}}$$

where

$P_{peak} = P_{motor} \times M_{br}\,[\%] \times \eta_{motor} \times \eta_{VLT}$[W]

The brake resistance depends on the DC-link voltage (U_{dc}).

Table 66: DC-link Voltage (UDC), FC 102

Size [V]	Brake active [V DC]	High-voltage warning [V DC]	Overvoltage alarm [V DC]
FC 102, 3x200–240 V	390	405	410
FC 102, 3x380–480 V	778	810	820
FC 102, 3x525–600 V	943	965	975
FC 102, 3x525–690 V	1099	1109	1130

NOTICE

For use of 3rd party brake resistors, make sure to comply with the table above. The VLT® Brake Resistor MCE 101 series is optimized for Danfoss VLT® series drives.

Danfoss recommends a brake resistance R_{rec} that can guarantee that the drive can brake at the highest brake power ($M_{br(\%)}$) of 150%. The formula can be written as:

$$200\,V:\ R_{rec} = \frac{107780}{P_{motor}}[\Omega]$$

$$500\,V:\ R_{rec} = \frac{464923}{P_{motor}}[\Omega]$$

$$600\,V:\ R_{rec} = \frac{630137}{P_{motor}}[\Omega]$$

$$690\,V:\ R_{rec} = \frac{832664}{P_{motor}}[\Omega]$$

NOTICE

The brake resistor circuit resistance selected should not be lower than what Danfoss recommends respecting the current limits.

NOTICE

If a higher value is selected, the brake energy is reduced accordingly to a value below 150%.

NOTICE

If a short circuit occurs in the brake transistor, power dissipation in the brake resistor is only prevented by using a mains switch or contactor to disconnect the mains from the drive. Alternatively, use a switch in the brake circuit. Uninterrupted power dissipation in the brake resistor can cause overheating, damage, or fire.

⚠ WARNING ⚠

RISK OF FIRE

The brake resistors become hot during braking. Failure to place the brake resistor in a secure area can result in property damage and/or serious injury.

- Ensure that the brake resistor is placed in a secure environment to avoid fire risk.
- Do no touch the brake resistor during or after braking to avoid serious burns.

9.8.2 Control with Brake Function

A relay/digital output can be used to protect the brake resistor against overloading or overheating by generating a fault in the drive. If the brake IGBT is overloaded or overheated, the relay/digital output signal from the drive to the brake turns off the brake IGBT. The relay/digital output signal does not protect against a short circuit in the brake IGBT or a ground fault in the brake module or wiring. If a short circuit occurs in the brake IGBT, Danfoss recommends a means to disconnect the brake.

Furthermore, the brake enables reading out the momentary power and the average power of the latest 120 s. The brake can monitor the power energizing and make sure that it does not exceed the limit selected in the brake monitor function. Consult the Operating Guide for more details.

NOTICE

Monitoring the brake power is not a safety function. A thermal switch connected to an external contactor is required for that purpose. The brake resistor circuit is not ground-leakage protected.

Overvoltage control (OVC) can be selected as an alternative brake function in parameters for overvoltage control. This function is active for all units and ensures that if the DC-link voltage increases, the output frequency also increases to limit the voltage from the DC link, which avoids a trip.

NOTICE

OVC cannot be activated when running a PM motor, while parameters for motor construction is set to PM non-salient SPM.

NOTICE

MORE REQUIREMENTS FOR BRAKING APPLICATIONS

When the motor brakes the machinery, the DC-link voltage of the drive increases. The effect of the increase equals an increase of the motor supply voltage of up to 20%. Consider this voltage increase when specifying the motor insulation requirements if the motor will be braking a large part of its operational time. **Example:** Motor insulation requirement for a 400 V AC mains voltage application must be selected as if the drive were supplied with 480 V.

9.9 Residual Current Device

Use RCD relays, multiple protective earthing, or grounding as extra protection to comply with local safety regulations. If a ground fault appears, a DC content may develop in the faulty current. If RCD relays are used, local regulations must be observed. Relays must be suitable for protection of 3-phase equipment with a bridge rectifier and for a brief discharge on power-up using RCDs.

9.10 Leakage Current

Follow national and local codes regarding protective earthing of equipment where leakage current exceeds 3.5 mA.

Drive technology implies high frequency switching at high power. This generates a leakage current in the ground connection.

The ground leakage current is made up of several contributions and depends on various system configurations, including:

- RFI filtering.
- Motor cable length.
- Motor cable shielding.
- Drive power.

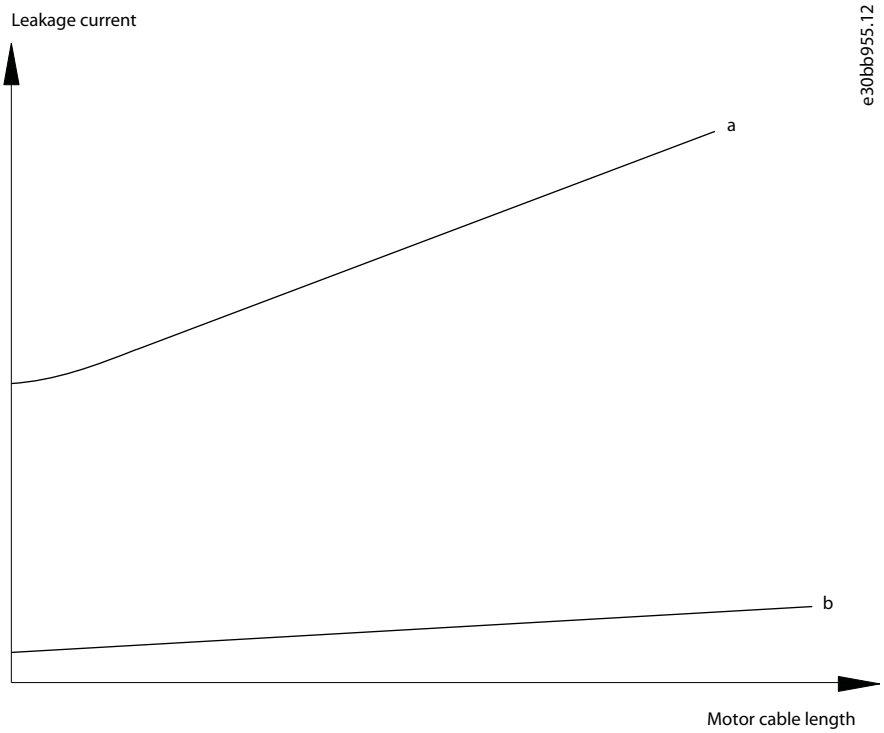

Illustration 76: Influence of the Cable Length and Power Size on Leakage Current, Power Size a > Power Size B

The leakage current also depends on the line distortion.

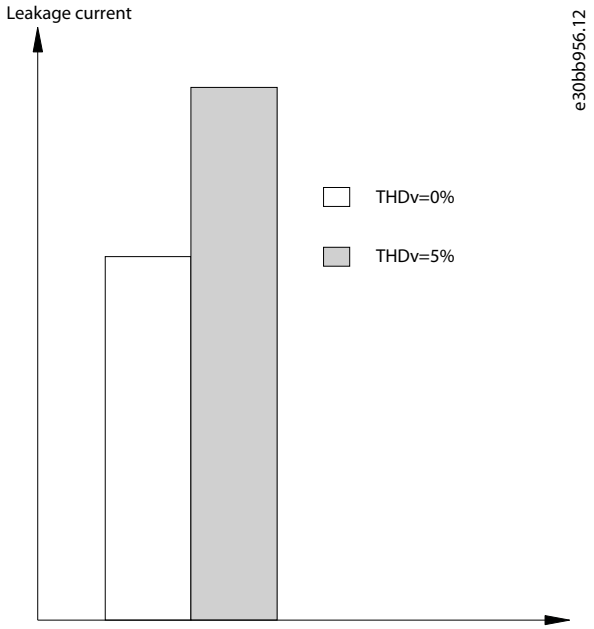

Illustration 77: Influence of Line Distortion on Leakage Current

If the leakage current exceeds 3.5 mA, compliance with EN/IEC 61800-5-1 (power drive system product standard) requires special care.

Reinforce grounding with the following protective earth connection requirements:

- Ground wire (terminal 95) of at least 10 mm^2 (8 AWG) cross-section.
- 2 separate ground wires both complying with the dimensioning rules.

See EN/IEC 61800-5-1 and IEC EN 62477-1 for further information.

9.10.1 Using a Residual Current Device (RCD)

Where residual current devices (RCDs), also known as earth leakage circuit breakers (ELCBs), are used, comply with the following:

- Use RCDs of type B only, which are capable of detecting AC and DC currents.
- Use RCDs with an inrush delay to prevent faults caused by transient ground currents.
- Dimension RCDs according to the system configuration and environmental considerations.

The leakage current includes several frequencies originating from both the mains frequency and the switching frequency. Whether the switching frequency is detected depends on the type of RCD used.

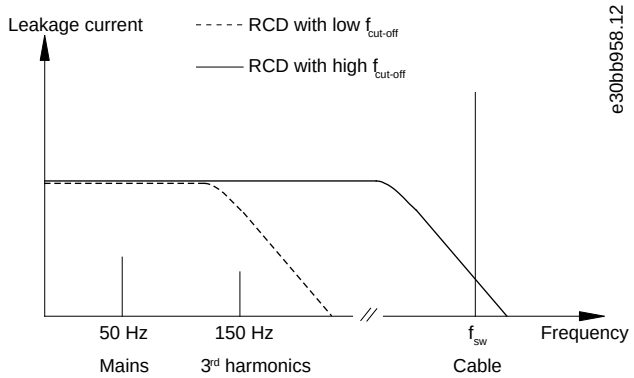

Illustration 78: Mains Contributions to Leakage Current

The amount of leakage current detected by the RCD depends on the cut-off frequency of the RCD.

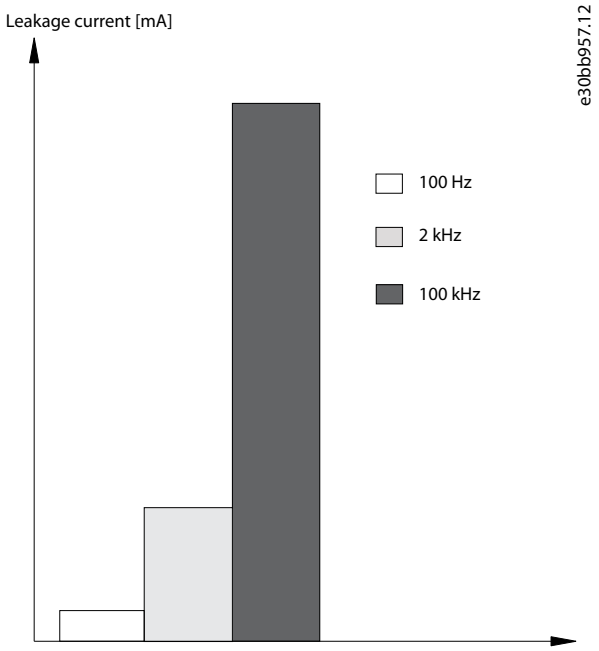

Illustration 79: Influence of Cut-off Frequency of the RCD on what is Responded to/Measured

For more details, refer to the RCD Application Note.

9.11 Efficiency

Efficiency of the drive (η_{VLT})

The load on the drive has little effect on its efficiency. In general, the efficiency is the same at the rated motor frequency $f_{M,N,}$ even if the motor supplies 100% of the rated shaft torque or only 75%, for example if there are part loads. This also means that the efficiency of the drive does not change even if other U/f characteristics are selected. However, the U/f characteristics influence the efficiency of the motor. The efficiency declines a little when the switching frequency is set to a value of above 5 kHz. The efficiency is also slightly reduced if the mains voltage is 480 V, or if the motor cable is longer than 30 m (98 ft).

Drive efficiency calculation

Calculate the efficiency of the drive at different speeds and loads based on the graph in Illustration 80. Multiply the factor in this graph by the specific efficiency factor listed in the specification tables in :

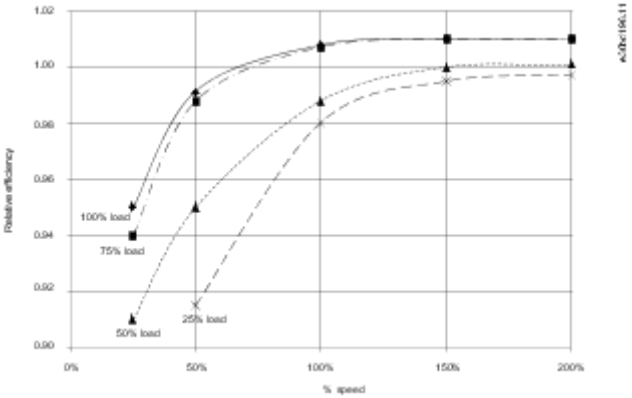

Illustration 80: Typical Efficiency Curves

Example: Assume a 160 kW, 380–480/500 V AC drive at 25% load at 50% speed. The graph shows 0.97 - the rated efficiency for a 160 kW drive is 0.98. The actual efficiency is then: 0.97x0.98=0.95.

The MyDrive® ecoSmart™ tool helps to calculate the efficiency, refer to https://ecosmart.mydrive.danfoss.com.

Efficiency of the motor (η_{MOTOR})

The efficiency of a motor connected to the drive depends on the magnetizing level. In general, the efficiency is as good as with mains operation. The efficiency of the motor depends on the type of motor. In the range of 75–100% of the rated torque, the efficiency of the motor is practically constant, both when the drive runs the motor and when it runs directly on mains. In small motors, the influence from the U/f characteristic on efficiency is marginal. However, in motors from 11 kW (15 hp) and up, the advantages are significant. Typically, the switching frequency does not affect the efficiency of small motors. Motors from 11 kW (15 hp) and up have their efficiency improved (1–2%) because the shape of the motor current sine-wave is almost perfect at high switching frequency.

Efficiency of the system (η_{SYSTEM})

To calculate the system efficiency, the efficiency of the drive (η_{VLT}) is multiplied by the efficiency of the motor (η_{MOTOR}):

$\eta_{SYSTEM} = \eta_{VLT} \times \eta_{MOTOR}$

9.12 Acoustic Noise and Airflow

Table 67: Acoustic Noise Ratings

Enclosure size	50% fan speed [dBA](1)	Full fan speed [dBA](1)
A1	51	60
A2	51	60
A3	51	60
A4	51	60
A5	54	63
B1	61	67
B2	58	70
B4	52	62

Enclosure size	50% fan speed [dBA][1]	Full fan speed [dBA][1]
C1	52	62
C2	55	65
C4	56	71
D3h[2]	58	71

[1] Values are measured 1 m (3.28 ft) from the unit.

[2] Details, see separate design guide VLT® HVAC DriveFC 102 90–710 kW

Drives are equipped with fans, which contribute to the airflow in enclosures and surroundings.

Table 68: Air Flow Through the Drive

Enclosure size	IP protection rating	Size [mm (in)]	Air flow [m^3/hr]	Effect [W]
A2	20/21	70x70 (2.75x2.75)	30.6	3.6
A3	20/21	80x80 (3.15x3.15)	37/59	4.0
A4	55/66	70x70 (2.75x2.75)	23	2.9
A5	55/66	92x92 (3.6x3.6)	96	4.2
B1	21/55/66	127x127 (5x5)	310	18
B2	21/55/66	140x140 (5.5x5.5)	370	22
B3	20/21	120x120 (4.7x4.7)	244	12
B4	20/21	127x127 (5x5)	310	18
C1	21/55/66	172x150 (6.8x5.9)	420	22
C2	21/55/66	172x150 (6.8x5.9)	420	22
C3	20	120x120 (4.7x4.7)	244	12
C4	20	127x127 (5x5)	310	18

9.13 dU/dt Conditions

To avoid damage to motors without phase insulation paper or other insulation reinforcement designed for operation of the drive, install a VLT® dU/dt filter MCC 102 or a VLT® Sine-wave Filter MCC 101 on the output of the drive.

When a transistor in the inverter bridge switches, the voltage across the motor increases by a dU/dt ratio depending on:

- Motor inductance.
- Motor cable (type, cross-section, length, shielded, unshielded).

The natural induction causes an overshoot voltage peak in the motor voltage before it stabilizes. The level depends on the voltage in the DC link. Switching on the IGBTs causes peak voltage on the motor terminals. The rise time and the peak voltage affect the service life of the motor. If the peak voltage is too high, motors without phase coil insulation can be adversely affected over time.

With short motor cables (a few meters), the rise time and peak voltage are lower. The rise time and peak voltage increase with cable length.

The drive complies with IEC 60034-25 and IEC 60034-17 for motor design.

NOTICE

The measurements in the following tables are carried out with a single power size and motor, but with several motor cable lengths, are for information only. Depending on the combination of drive, motor cable type, motor cable length, and motor, the values for Upeak and dU/dt can be higher at the motor terminal. Sometimes, the values exceed the limits given by the motor manufacturer.

- To avoid problems with too high dU/dt, use motor cables longer than 30–40 m (98–131 ft).
- If in doubt, use a dU/dt filter between the drive and the motor, or do a measurement in the actual installation.

9.13.1 dU/dt Values, 200–240 V (T2)

9.13.1.1 dU/dt Values for P5K5T2, 200–240 V

Table 69: P5K5T2

Cable length [m (ft)]	Mains voltage [V]	Rise time [µs]	U_{peak} [kV]	dU/dt [kV/µs]
36 (118)	240	0.226	0.616	2.142
50 (164)	240	0.262	0.626	1.908
100 (328)	240	0.650	0.614	0.757
150(492)	240	0.745	0.612	0.655

9.13.1.2 dU/dt Values for P7K5T2, 200–240 V

Table 70: P7K5T2

Cable length [m (ft)]	Mains voltage [V]	Rise time [µs]	U_{peak} [kV]	dU/dt [kV/µs]
5 (16.4)	240	0.13	0.510	3.090
50 (164)	240	0.23	0.590	2.034
100 (328)	240	0.54	0.580	0.865
150 (492)	240	0.66	0.560	0.674

9.13.1.3 dU/dt Values for P11KT2, 200–240 V

Table 71: P11KT2

Cable length [m (ft)]	Mains voltage [V]	Rise time [µs]	U_{peak} [kV]	dU/dt [kV/µs]
36 (118)	240	0.264	0.624	1.894
136 (446)	240	0.536	0.594	0.896
150 (492)	240	0.568	0.568	0.806

9.13.1.4 dU/dt Values for P15KT2, 200–240 V

Table 72: P15KT2

Cable length [m (ft)]	Mains voltage [V]	Rise time [µs]	U_{peak} [kV]	dU/dt [kV/µs]
30 (98.4)	240	0.556	0.650	0.935
100 (328)	240	0.592	0.594	0.807
150 (492)	240	0.708	0.575	0.669

9.13.1.5 dU/dt Values for P18KT2, 200–240 V

Table 73: P18KT2

Cable length [m (ft)]	Mains voltage [V]	Rise time [µs]	U_{peak} [kV]	dU/dt [kV/µs]
36 (118)	240	0.244	0.608	1.993
136 (446.2)	240	0.568	0.580	0.832
150 (492)	240	0.720	0.574	0.661

9.13.1.6 dU/dt Values for P22KT2, 200–240 V

Table 74: P22KT2

Cable length [m (ft)]	Mains voltage [V]	Rise time [µs]	U_{peak} [kV]	dU/dt [kV/µs]
36 (118)	240	0.244	0.608	1.993
136 (446)	240	0.560	0.580	0.832
150 (492)	240	0.720	0.574	0.661

9.13.1.7 dU/dt Values for P30KT2, 200–240 V

Table 75: P30KT2

Cable length [m (ft)]	Mains voltage [V]	Rise time [µs]	U_{peak} [kV]	dU/dt [kV/µs]
15 (49.2)	240	0.194	0.626	2.581
50 (328)	240	0.252	0.574	1.929
150 (492)	240	0.444	0.538	0.977

9.13.1.8 dU/dt Values for P37KT2, 200–240 V

Table 76: P37KT2

Cable length [m (ft)]	Mains voltage [V]	Rise time [µs]	U_{peak} [kV]	dU/dt [kV/µs]
30 (98.4)	240	0.300	0.598	1.594
100 (328)	240	0.536	0.566	0.844
150 (492)	240	0.776	0.546	0.562

9.13.1.9 dU/dt Values for P45KT2, 200–240 V

Table 77: P45KT2

Cable length [m (ft)]	Mains voltage [V]	Rise time [µs]	U_{peak} [kV]	dU/dt [kV/µs]
30 (98.4)	240	0.300	0.598	1.594
100 (328)	240	0.536	0.566	0.844
150 (492)	240	0.776	0.546	0.562

9.13.2 dU/dt Values, 380–480 V (T4)

9.13.2.1 dU/dt Values for P1K5T4, 380–480 V

Table 78: P1K5T4

Cable length [m (ft)]	Mains voltage [V]	Rise time [µs]	U_{peak} [kV]	dU/dt [kV/µs]
5 (16.4)	400	0.640	0.690	0.862
50 (164)	400	0.470	0.985	0.985
150 (492)	400	0.760	1.045	0.947

9.13.2.2 dU/dt Values for P4K0T4, 380–480 V

Table 79: P4K0T4

Cable length [m (ft)]	Mains voltage [V]	Rise time [µs]	U_{peak} [kV]	dU/dt [kV/µs]
5 (16.4)	400	0.172	0.890	4.156
50 (164)	400	0.310	????	2.564
150 (492)	400	0.370	1.190	1.170

9.13.2.3 dU/dt Values for P7K5T4, 380–480 V

Table 80: P7K5T4

Cable length [m (ft)]	Mains voltage [V]	Rise time [µs]	U_{peak} [kV]	dU/dt [kV/µs]
5 (16.4)	400	0.04755	0.739	8.035
50 (164)	400	0.207	1.040	4.548
150 (492)	400	0.6742	1.030	2.828

9.13.2.4 dU/dt Values for P11KT4, 380–480 V

Table 81: P11KT4

Cable length [m (ft)]	Mains voltage [V]	Rise time [µs]	U_{peak} [kV]	dU/dt [kV/µs]
15 (49.2)	400	0.408	0.718	1.402
100 (328)	400	0.364	1.050	2.376
150 (492)	400	0.400	0.980	2.000

9.13.2.5 dU/dt Values for P15KT4, 380–400 V

Table 82: P15KT4

Cable length [m (ft)]	Mains voltage [V]	Rise time [µs]	U_{peak} [kV]	dU/dt [kV/µs]
36 (118)	400	0.422	1.060	2.014
100 (328)	400	0.464	0.900	1.616
150 (492)	400	0.896	1.000	0.915

9.13.2.6 dU/dt Values for P18KT4, 380–480 V

Table 83: P18KT4

Cable length [m (ft)]	Mains voltage [V]	Rise time [µs]	U_{peak} [kV]	dU/dt [kV/µs]
36 (118)	400	0.344	1.040	2.442
100 (328)	400	1.000	1.190	0.950
150 (492)	400	1.400	1.040	0.596

9.13.2.7 dU/dt Values for P22KT4, 380–480 V

Table 84: P22KT4

Cable length [m (ft)]	Mains voltage [V]	Rise time [µs]	U_{peak} [kV]	dU/dt [kV/µs]
36 (118)	400	0.232	0.950	3.534
100 (328)	400	0.410	0.980	1.927
150 (492)	400	0.430	0.970	1.860

9.13.2.8 dU/dt Values for P30KT4, 380–480 V

Table 85: P30KT4

Cable length [m (ft)]	Mains voltage [V]	Rise time [µs]	U_{peak} [kV]	dU/dt [kV/µs]
15 (49.2)	400	0.271	1.000	3.100
100 (328)	400	0.440	1.000	1.818
150 (492)	400	0.520	1.990	1.510

9.13.2.9 dU/dt Value for P37KT4, 380–480 V

Table 86: P37KT4

Cable length [m (ft)]	Mains voltage [V]	Rise time [µs]	U_{peak} [kV]	dU/dt [kV/µs]
5 (16.4)	480	0.270	1.276	3.781
50 (164)	480	0.435	1.184	2.177
100 (328)	480	0.840	1.188	1.131
150 (492)	480	0.940	1.212	1.031

9.13.2.10 dU/dt Values for P45KT4, 380–480 V

Table 87: P45KT4

Cable length [m (ft)]	Mains voltage [V]	Rise time [µs]	U_{peak} [kV]	dU/dt [kV/µs]
36 (118)	400	0.254	1.056	3.326
50 (164)	400	0.465	1.048	1.803
100 (328)	400	0.815	1.032	1.013
150 (492)	400	0.890	1.016	0.913

9.13.2.11 dU/dt Values for P55KT4, 380–480 V

Table 88: P55KT4

Cable length [m (ft)]	Mains voltage [V]	Rise time [µs]	U_{peak} [kV]	dU/dt [kV/µs]
10 (32.8)	400	0.350	0.932	2.130

9.13.2.12 dU/dt Values for P75KT4, 380–480 V

Table 89: P75KT4

Cable length [m (ft)]	Mains voltage [V]	Rise time [µs]	U_{peak} [kV]	dU/dt [kV/µs]
5 (16.4)	480	0.371	1.170	2.466

9.13.2.13 dU/dt Values for P90KT4, 380–480 V

Table 90: P90KT4

Cable length [m (ft)]	Mains voltage [V]	Rise time [µs]	U_{peak} [kV]	dU/dt [kV/µs]
5 (16.4)	400	0.364	1.030	2.264

9.14 Electromagnetic Compatibility (EMC) Overview

9.14.1 EMC Test Results

The following test results have been obtained by using a system with a drive, a shielded control cable, a control box with potentiometer, a single motor, and shielded motor cable (Ölflex Classic 100 CY) at nominal switching frequency. See Table 91 for the maximum motor cable lengths for compliance.

NOTICE

Conditions may change significantly for other setups.

NOTICE

- Consult 9.7.2 Parallel Connection of Motors for parallel motor cables.

Table 91: EMC Test Results (Emission) Maximum Motor Cable Length

RFI filter type		Conducted emission			Radiated emission		
		Cable length [m (ft)]			Cable length [m (ft)]		
Standards and requirements	EN 55011/CISPR 11	Class B	Class A, Group 1	Class A, Group 2	Class B	Class A, Group 1	Class A, Group 2
	EN/IEC 61800-3	Category C1	Category C2	Category C3	Category C1	Category C2	Category C3
H1							
FC 102	1.1–45 kW, 200–240 V	50 (164)	150 (492)	150 (492)	No	Yes	Yes
	1.1–90 kW, 380–480 V	50 (164)	150 (492)	150 (492)	No	Yes	Yes
H2							
FC 102	1.1–3.7 kW, 200–240 V	No	No	5 (16.4)	No	No	No
	5.5–45 kW, 200–240 V	No	No	25 (82)	No	No	No
	1.1–7.5 kW, 380–500 V	No	No	5 (16.4)	No	No	No
	11–90 kW, 380–500 V(1)	No	No	25 (82)	No	No	No
	11–22 kW, 525–690 V(1),(2)	No	No	25 (82)	No	No	No
	30–90 kW, 525–690 V(1),(3)	No	No	25 (82)	No	No	No
H3							
FC 102	1.1–45 kW, 200–240 V	10 (32.8)	50 (164)	75 (246)	No	Yes	Yes
	1.1–90 kW, 380–480 V	10 (32.8)	50 (164)	75 (246)	No	Yes	Yes
H4							
	11–30 kW, 525–690 V(2)	No	100 (328)	100 (328)	No	Yes	Yes

RFI filter type		Conducted emission			Radiated emission		
	37–90 kW, 525–690 V[3]	No	150 (492)	150 (492)	No	Yes	Yes
Hx[4]							
FC 102	1.1–90 kW, 525–600 V	No	No	No	No	No	No

[1] T7, 37–90 kW complies with class A group 1 with 25 m (82 ft) motor cable. Some restrictions for the installation apply (contact Danfoss for details). Hx, H1, H2; H3; H4, or H5 is defined in the type code positions 16–17 for EMC filters.

[2] Enclosure size B.

[3] Enclosure size C.

[4] Hx versions can be used according to EN/IEC 61800-3 category C4.

9.14.2 Emission Requirements

According to the EMC product standard for AC drives, EN/IEC 61800-3:2004, the EMC requirements depend on the intended use of the drive. Four categories are defined in the EMC product standard. The definitions of the 4 categories together with the requirements for mains supply voltage conducted emissions are given in Table 92.

Table 92: Emission Requirements

Category	Definition	Conducted emission requirement according to the limits given in EN 61800-3
C1	Drives installed in the 1st environment (home and office) with a supply voltage less than 1000 V.	Class B
C2	Drives installed in the 1st environment (home and office) with a supply voltage less than 1000 V, which are neither plug-in nor movable and are intended for installation and commissioning by a professional.	Class A Group 1
C3	Drives installed in the 2nd environment (industrial) with a supply voltage lower than 1000 V.	Class A Group 2
C4	Drives installed in the 2nd environment (industrial) with a supply voltage equal to or above 1000 V or rated current equal to or above 400 A or intended for use in complex systems.	No limit line. Make an EMC plan.

When the generic emission standards are used, the drives are required to comply with the limits in Table 93.

Table 93: Emission Limit Classes

Environment	Generic standard	Conducted emission requirement according to the limits given in EN 55011
1st environment (home and office)	EN/IEC 61000-6-3 Emission standard for residential, commercial, and light industrial environments.	Class B
2nd environment (industrial environment)	EN/IEC 61000-6-4 Emission standard for industrial environments.	Class A Group 1

NOTICE

According to the EMC Directive, a system is defined as a combination of several types of equipment, finished products, and/or components combined, designed and/or put together by the same person (system manufacturer) intended to be placed on the market for distribution as a single functional unit for an end user and intended to be installed and operated together to perform a specific task. The EMC directive applies to products/systems and installations, but in case the installation is built up of CE marked products/systems the installation can also be considered compliant with the EMC directive. Installations shall not be CE marked.
According to the EMC Directive, Danfoss Drives as a manufacturer of product/systems is responsible for obtaining the essential requirements of the EMC directive and attaching the CE mark. For systems involving load sharing and other DC terminals, Danfoss Drives can only ensure compliance to EMC Directive when end users connect combinations of Danfoss Drives products as described in our technical documentation.
If any third-party products are connected to the load share or other DC terminals on the AC drives, Danfoss Drives cannot guarantee that the EMC requirements are fulfilled.

9.14.3 Immunity Requirements

The immunity requirements for drives depend on the environment in which they are installed. The requirements for the industrial environment are higher than the requirements for the home and office environment. All Danfoss VLT® drives comply with the requirements for the industrial environment and therefore also comply with the lower requirements for home and office environment with a large safety margin.
To document immunity against burst transient from electrical phenomena, the following immunity tests have been carried out on a system consisting of:

- A drive (with options if relevant).
- A shielded control cable.
- A control box with potentiometer, motor cable, and motor.

The tests were performed in accordance with the following basic standards:

- **EN 61000-4-2 (IEC 61000-4-2) Electrostatic discharges (ESD):** Simulation of electrostatic discharges from human beings.
- **EN 61000-4-3 (IEC 61000-4-3) Radiated immunity:** Amplitude modulated simulation of the effects of radar and radio communication equipment and mobile communications equipment.
- **EN 61000-4-4 (IEC 61000-4-4) Burst transients:** Simulation of interference brought about by switching a contactor, relay, or similar devices.
- **EN 61000-4-5 (IEC 61000-4-5) Surge transients:** Simulation of transients brought about by, for example, lightning that strikes near installations.
- **EN 61000-4-6 (IEC 61000-4-6) RF Common mode:** Simulation of the effect from radio-transmission equipment joined by connection cables.

The immunity requirements should follow product standard IEC 61800-3. See Table 94.

Table 94: EMC Immunity, Voltage range: 200–240 V, 380–480 V

Basic standard	Burst IEC 61000-4-4	Surge IEC 61000-4-5	ESD IEC 61000-4-2	Radiated electromagnetic field IEC 61000-4-3	RF common mode voltage IEC 61000-4-6
Acceptance criterion	**B**	**B**	**B**	**A**	**A**
Line	4 kV CM	2 kV/2 Ω DM 4 kV/12 Ω CM	–	–	10 V_{RMS}
Motor	4 kV CM	4 kV/2 Ω(1)	–	–	10 V_{RMS}
Brake	4 kV CM	4 kV/2 Ω(1)	–	–	10 V_{RMS}
Load sharing	4 kV CM	4 kV/2 Ω(1)	–	–	10 V_{RMS}
Control wires	2 kV CM	2 kV/2 Ω(1)	–	–	10 V_{RMS}

Basic standard	Burst IEC 61000-4-4	Surge IEC 61000-4-5	ESD IEC 61000-4-2	Radiated electromagnetic field IEC 61000-4-3	RF common mode voltage IEC 61000-4-6
Standard bus	2 kV CM	2 kV/2 Ω[1]	–	–	10 V_{RMS}
Relay wires	2 kV CM	2 kV/2 Ω[1]	–	–	10 V_{RMS}
Application and Fieldbus options	2 kV CM	2 kV/2 Ω[1]	–	–	10 V_{RMS}
LCP cable	2 kV CM	2 kV/2 Ω[1]	–	–	10 V_{RMS}
External 24 V DC	2 kV CM	0.5 kV/2 Ω DM 1 kV/12 Ω CM	–	–	10 V_{RMS}
Enclosure	–	–	8 kV AD 6 kV CD	10 V/m	–

[1] Injection on cable shield.

AD: Air Discharge
CD: Contact Discharge
CM: Common Mode
DM: Differential Mode

9.14.4 EMC Compatibility

NOTICE

OPERATOR RESPONSIBILITY
According to the EN 61800-3 standard for variable-speed drive systems, the operator is responsible for ensuring EMC compliance. Manufacturers can offer solutions for operation conforming to the standard. Operators are responsible for applying these solutions and for paying the associated costs.

There are 2 options for ensuring electromagnetic compatibility:

- Eliminate or minimize interference at the source of emitted interference.
- Increase the immunity to interference in devices affected by its reception.

RFI filters

The goal is to obtain systems that operate stably without radio frequency interference between components. To achieve a high level of immunity, use drives with high-quality RFI filters.

NOTICE

In a residential environment, this product can cause radio interference, in which case supplementary mitigation measures may be required.

PELV and galvanic isolation compliance

All control and relay terminals comply with PELV (excluding grounded Delta leg above 400 V). To obtain galvanic (ensured) isolation, fulfill requirements for higher isolation and provide the relevant creepage/clearance distances. These requirements are described in EN 61800-5.1.

Electrical isolation is provided as shown in Illustration 81. The components described comply with both PELV and the galvanic isolation requirements.

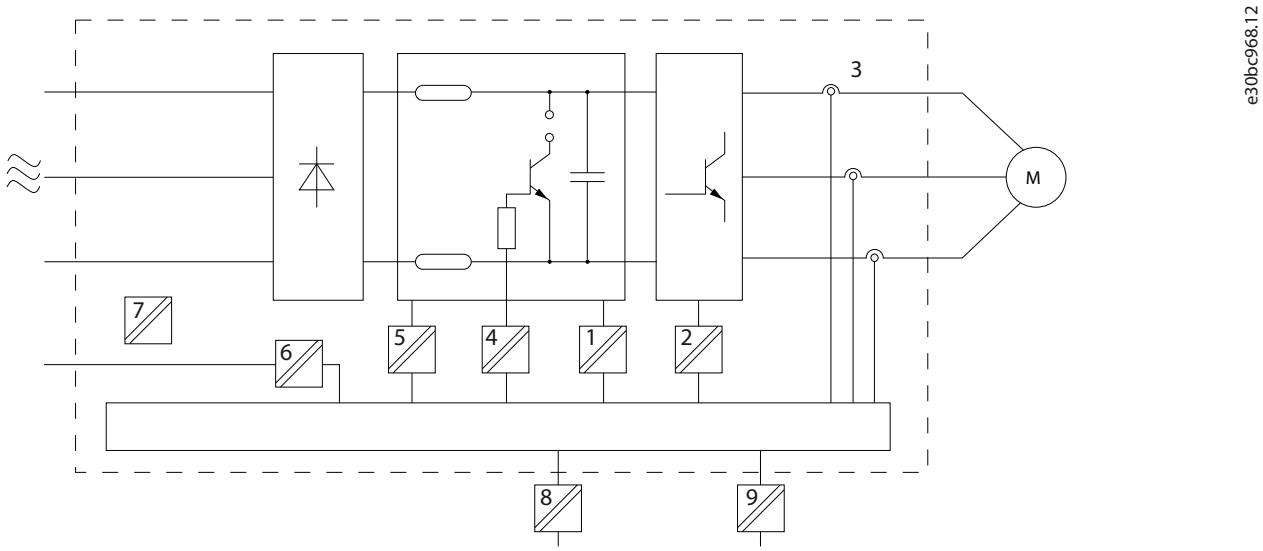

Illustration 81: Galvanic Isolation

1	Power supply (SMPS) including signal isolation of DC link	6	Custom relays
2	Gate drive for the IGBTs	7	Mechanical brake
3	Current transducers	8	Functional galvanic isolation for the 24 V backup option and for the RS485 standard bus interface.
4	Opto-coupler, brake module (optional)	9	Functional galvanic isolation for the 24 V backup option and for the RS485 standard bus interface.
5	Internal inrush, RFI, and temperature measurement circuits		

9.15 EMC-compliant Installation

To obtain an EMC-compliant installation, be sure to follow all electrical installation instructions.

Also, remember to practice the following:

- When using relays, control cables, a signal interface, fieldbus, or brake, connect the shield to the enclosure at both ends. If the ground path has high impedance, is noisy, or is carrying current, break the shield connection on 1 end to avoid ground current loops.
- Convey the currents back to the unit using a metal mounting plate. Ensure good electrical contact from the mounting plate by securely fastening the mounting screws to the drive chassis.
- Use shielded cables for motor output cables. An alternative is unshielded motor cables within metal conduit.
- Ensure that motor and brake cables are as short as possible to reduce the interference level from the entire system.
- Avoid placing cables with a sensitive signal level alongside motor and brake cables.
- For communication and command/control lines, follow the particular communication protocol standards. For example, USB must use shielded cables, but RS485/ethernet can use shielded UTP or unshielded UTP cables.
- Ensure that all control terminal connections are rated protective extra low voltage (PELV).

N O T I C E

TWISTED SHIELD ENDS (PIGTAILS)

Twisted shield ends increase the shield impedance at higher frequencies, which reduces the shield effect and increases the leakage current.

– Use integrated shield clamps instead of twisted shield ends.

NOTICE

SHIELDED CABLES

If shielded cables or metal conduits are not used, the unit and the installation do not meet regulatory limits on radio frequency (RF) emission levels.

NOTICE

EMC INTERFERENCE

Failure to isolate power, motor, and control cables can result in unintended behavior or reduced performance.

- Use shielded cables for motor and control wiring.
- Provide a minimum 200 mm (7.9 in) separation between mains input, motor cables, and control cables.

NOTICE

INSTALLATION AT HIGH ALTITUDE

There is a risk for overvoltage. Isolation between components and critical parts could be insufficient and may not comply with PELV requirements.

- Use external protective devices or galvanic isolation. For installations above 2000 m (6500 ft) altitude, contact Danfoss regarding protective extra low voltage (PELV) compliance.

NOTICE

PROTECTIVE EXTRA LOW VOLTAGE (PELV) COMPLIANCE

Prevent electric shock by using PELV electrical supply and complying with local and national PELV regulations.

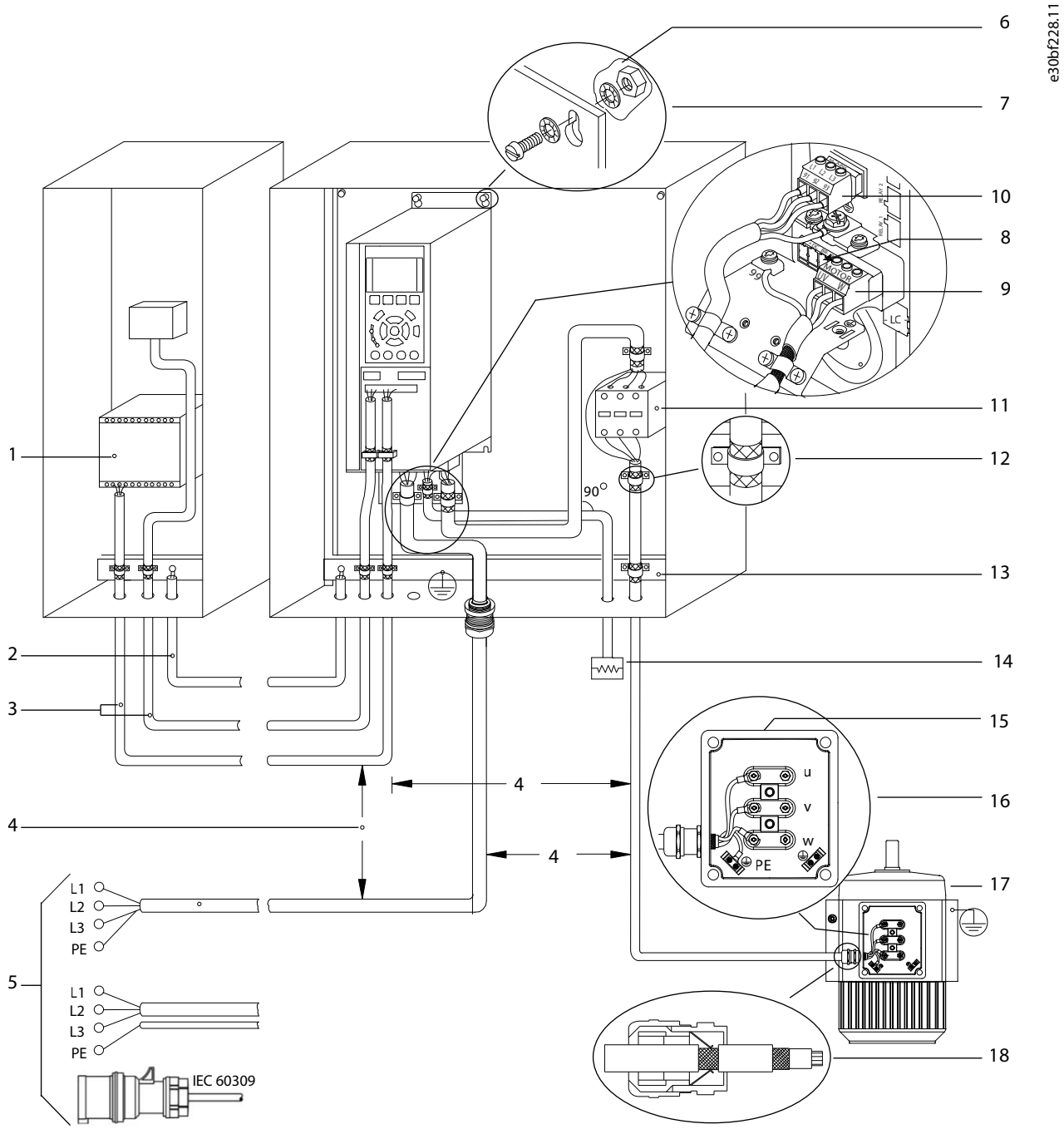

Illustration 82: Example of Proper EMC Installation

1	Programmable logic controller (PLC)	10	Mains cable (unshielded)
2	Minimum 16 mm^2 (6 AWG) equalizing cable	11	Output contactor, and so on
3	Control cables	12	Cable insulation stripped
4	Minimum 200 mm (7.9 in) between control cables, motor cables, and mains cables	13	Common ground busbar. Follow local and national requirements for cabinet grounding
5	Mains supply options, see IEC/EN 61800-5-1	14	Brake resistor
6	Bare (unpainted) surface	15	Terminal box
7	Star washers	16	Connection to motor
8	Brake cable (shielded) – not shown, but same grounding principle applies as for motor cable	17	Motor
9	Motor cable (shielded)	18	EMC cable gland

9.16 Harmonics Overview

Non-linear loads, such as found in drives, do not draw current uniformly from the power line. This non-sinusoidal current has components which are multiples of the basic current frequency. These components are referred to as harmonics. It is important to control the total harmonic distortion on the mains supply. Although the harmonic currents do not directly affect electrical energy consumption, they generate heat in the wiring and transformers that can affect other devices on the same power line.

9.16.1 Harmonics Analysis

Since harmonics increase heat losses, it is important to consider harmonics when designing systems to prevent overloading the transformer, the inductors, and the wiring. When necessary, perform an analysis of the system harmonics to determine equipment effects.

A non-sinusoidal current is transformed with a Fourier series analysis into sine-ware currents at different frequencies, that is, different harmonic currents I_N with 50 Hz or 60 Hz as the basic frequency.

Table 95: Harmonics-related Abbreviations

Abbreviation	Description
f_1	Basic frequency (50 Hz or 60 Hz)
I_1	Current at the basic frequency
U_1	Voltage at the basic frequency
I_n	Current at the nth harmonic frequency
U_n	Voltage at the nth harmonic frequency
n	Harmonic order

Table 96: Basic Currents and Harmonic Currents

	Basic current ($I_{1)}$)	Harmonic current ($I_{n)}$)		
Current	I_1	I_5	I_7	I_{11}
Frequency [Hz]	50	250	350	550

Table 97: Harmonic Currents versus RMS Input Current

Current	Harmonic current				
	I_{RMS}	I_1	I_5	I_7	I_{11-49}
Input current	1.0	0.9	0.5	0.2	<0.1

The voltage distortion on the mains supply voltage depends on the size of the harmonic currents multiplied by the mains impedance for the frequency in question. The total voltage distortion (THDi) is calculated based on the individual voltage harmonics using this formula:

$$THDi = \frac{\sqrt{I_5^2 + I_7^2 + ...I_n^2}}{I}$$

9.16.2 Effect of Harmonics in a Power Distribution System

In Illustration 83, a transformer is connected on the primary side to a point of common coupling PCC1 on the medium voltage supply. The transformer has an impedance Z_{xfr} and feeds several loads. The point of common coupling where all loads are connected together is PCC2. Each load is connected through cables that have an impedance Z_1, Z_2, Z_3.

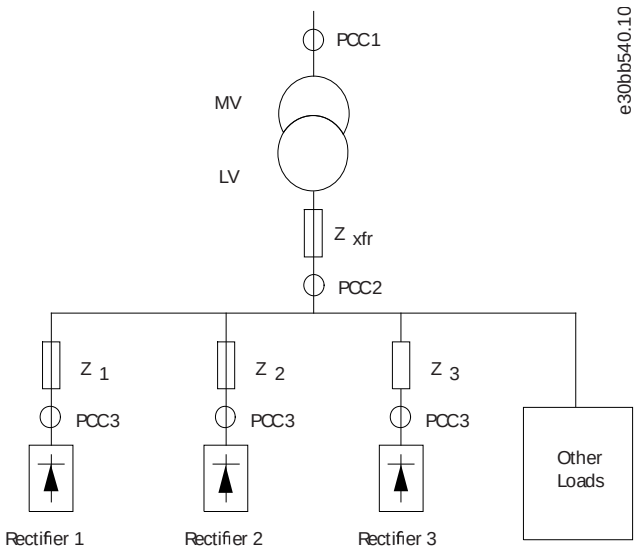

Illustration 83: Small Distribution System

Harmonic currents drawn by non-linear loads cause distortion of the voltage because of the voltage drop on the impedances of the distribution system. Higher impedances result in higher levels of voltage distortion.

Current distortion relates to apparatus performance and it relates to the individual load. Voltage distortion relates to system performance. It is not possible to determine the voltage distortion in the PCC knowing only the load's harmonic performance. To predict the distortion in the PCC, the configuration of the distribution system and relevant impedances must be known.

A commonly used term for describing the impedance of a grid is the short circuit ratio R_{sce}. R_{sce} is defined as the ratio between the short circuit apparent power of the supply at the PCC (S_{sc}) and the rated apparent power of the load (S_{equ}).

$$R_{sce} = \frac{S_{ce}}{S_{equ}}$$

where

$$S_{sc} = \frac{U^2}{Z_{supply}} \text{ and } S_{equ} = U * I_{equ}$$

The negative effect of harmonics is twofold

- Harmonic currents contribute to system losses (in cabling, transformer).
- Harmonic voltage distortion causes disturbance to other loads and increase losses in other loads.

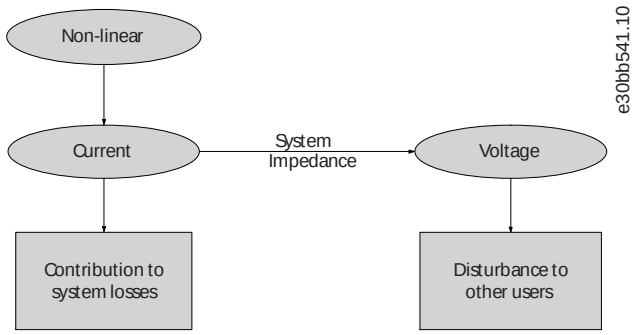

Illustration 84: Negative Effects of Harmonics

9.16.3 IEC Harmonic Standards

In most of Europe, the basis for the objective assessment of the quality of mains power is the Electromagnetic Compatibility fo Devices Act (EMVG). Compliance with these regulations ensures that all devices and networks connected to electrical distribution systems fulfill their intended purpose without generating problems.

Table 98: EN Design Standards for Mains Power Quality

Standard	Definition
EN 61000-2-2, EN 61000-2-4, EN 50160	Define the mains voltage limits required for public and industrial power grids.
EN 61000-3-2, 61000-3-12	Regulate mains interference generated by connected devices in lower current products.
EN 61800-3	Monitors electronic equipment for use in power installations.

There are 2 European standards that address harmonics in the frequency range from 0 Hz to 9 kHz:

- EN 61000-2-2 Compatibility Levels for Low-Frequency Conducted Disturbances and Signaling in Public Low-Voltage Power Supply Systems.
- EN 61000-2-4 Compatibility Levels for Low-Frequency Conducted Disturbances and Signaling in Industrial Plants.

The EN 61000-2-2 standard states the requirements for compatibility levels for PCC (point of common coupling) of low voltage AC systems on a public supply network. Limits are specified only for harmonic voltage and total harmonic distortion of the voltage. EN 61000-2-2 does not define limits for harmonic currents. In situations where the total harmonic distortion THDv=8%, PCC limits are identical to those limits specified in the EN 61000-2-4 Class 2.

The EN 61000-2-4 standard states the requirements for compatibility levels in industrial and private networks. The standard further defines the following 3 classes of electromagnetic environments:

- Class 1 relates to compatibility levels that are less than the public supply network, which affects equipment sensitive to disturbances (lab equipment, some automation equipment, and certain protection devices).
- Class 2 relates to compatibility levels that are equal to the public supply network. The class applies to PCCs on the public supply network and to IPCs (internal points of coupling) on industrial or other private supply networks. Any equipment designed for operation on a public supply network allowed in this class.
- Class 3 relates to compatibility levels greater than the public supply network. This class applies only to IPCs in industrial environments. Use this class where the following equipment is found:
  - Large drives.
  - Welding machines.
  - Large motors starting frequently.
  - Loads that change quickly.

Typically, a class cannot be defined ahead of time without considering the intended equipment and processes to be used in the environment.

Table 99: Compatibility Levels for Harmonics

Harmonic order (h)	Class 1 (V_h%)	Class 2 (V_h%)	Class 3 (V_h%)
5	3	6	8
7	3	5	7
11	3	3.5	5
13	3	3	4.5
17	2	2	4
17<h≤49	2.27 x (17/h) - 0.27	2.27 x (17/h) - 0.27	4.5 x (17/h) - 0.5

Table 100: Compatibility Levels for the Total Harmonic Voltage Distortion THDv

	Class 1	Class 2	Class 3
THDv	5%	8%	10%

9.16.4 Harmonic Results (Emission)

Power sizes from P1K1 (1.1 kW) up to P18K (18.5 kW) in T2 (200–240 V) and up to P90K (90 kW) in T4 (380–480 V) fulfill the limits within IEC/EN 61000-3-12:2011, table 4.

Power sizes P110-P450 (110 kW–450 kW) in T4 (380–480 V) also comply with IEC/EN 61000-3-12:2011 even though not required because currents are above 75 A. Typical harmonic line current emission values for R_{SCE} above 120 are shown in Table 101 for power sizes below 90 kW and in Table 102 for power sizes above 90 kW.

Table 101: Typical Harmonic Emission Values for VLT® Drives FC 102, FC 103, FC 202, FC 302 below 90 kW

	Individual harmonic current Ih/Iref (%)			
	I5	I7	I11	I13
Typical value	38	20	10	8
Limit for R_{SCE} ≥ 120[1]	40	25	15	10
	Harmonic current distortion factor (%)			
	THC/Iref		PWHC/Iref	
Typical value[2]	42		41	
Limit for R_{SCE} ≥ 120[1]	48		46	

[1] According to IEC 61000-3-12:2011

[2] The value depends on voltage range, power size and other factors. Contact Danfoss to get information on specific values.

Table 102: Typical Harmonic Emission Values for VLT® Drives FC 102, FC 103, FC 202, FC 302 above 90 kW

	Individual harmonic current Ih/Iref (%)			
	I5	I7	I11	I13
Typical value	38	20	10	8
Limit for R_{SCE} ≥ 120[1]	(no limit applies because currents are above 75A)			
	Harmonic current distortion factor (%)			

	THC/Iref	PWHC/Iref
Typical value[2]	40	39
Limit for $R_{SCE} \geq 120$[1]	(no limit applies because currents are above 75A)	

[1] According to IEC 61000-3-12:2011

[2] The value depends on voltage range, power size and other factors. Contact Danfoss to get information on specific values.

NOTICE

It is the responsibility of the installer or user of the equipment to ensure that the equipment is connected only to a supply with a short-circuit power S_{SC} which is greater than or equal to what is specified below at the interface point between the users supply and the public system (R_{SCE}). If necessary, consult the distribution network operator.

$$S_{SC} = \sqrt{3} \times R_{SCE} \times U_{mains} \times I_{equ} = \sqrt{3} \times 120 \times 400 \times I_{equ}$$

Other power sizes can be connected to the public supply network by consultation with the distribution network operator.

9.16.5 Harmonic Mitigation

In cases where extra harmonic suppression is required, Danfoss offers a wide range of mitigation equipment. These are:

- VLT® 12-pulse drives.
- VLT® AHF filters.
- VLT® Low Harmonic Drives.
- VLT® Active Filters.

The choice of the right solution depends on several factors:

- The grid (background distortion, mains unbalance, resonance, and type of supply (transformer/generator)).
- Application (load profile, number of loads, and load size).
- Local/national requirements/regulations (IEEE 519, IEC, G5/4, and so on).
- Total cost of ownership (initial cost, efficiency, maintenance, and so on).

9.16.6 Harmonic Calculation

To determine the degree of voltage pollution on the grid and needed precaution, use the Danfoss MyDrive® Harmonics calculation software. The free tool can be downloaded from harmonics.mydrive.danfoss.com/.

9.16.7 Line Reactors

A line reactor is an inductor which is wired in series between a power source and a load. Line reactors, also called input AC reactors, are used in motor drive applications.

The main function of the line reactor is to limit the current. Line reactors also reduce the main harmonics, limit the inrush currents, and protect drives and motors. Line reactors help achieving an overall improvement of the true power factor and the quality of the input current waveform.

Line reactors are classified by their percent impedance (denoted as percent IZ or %IZ), which is the voltage drop due to impedance at the rated current expressed as a percent of rated voltage. The most common line reactors have either 3% or 5% impedance.

When to use line reactors

It is important to consider where to install the drives. In some situations, disturbances from the grid can damage the drive and precautions must be taken to avoid this. To prevent disturbances, ensure that there is only a minimum of impedance in front of the drive. Refer to 9.16.5 Harmonic Mitigation for advice on mitigation.

When calculating the impedance, also include the contribution from the supply transformer and the supply cables. In the following situations, add impedance (line reactor or transformer) in front of the drive:

- The installation site has switched power factor correction capacitors.
- The installation site has lightning strikes or voltage spikes.
- The installation site has power interruptions or voltage dips.
- The transformer is too large compared to the drive.

Also, when planning load sharing applications, pay special attention to different enclosure size combinations and inrush concepts. For technical advice on load sharing applications, contact Danfoss application support.

Danfoss offers the line reactor series VLT® Line Reactor MCC 103. For more information, go to danfoss.com.

9.17 Connections

9.17.1 Power Connections

NOTICE

All cabling must comply with national and local regulations on cable cross-sections and ambient temperature. UL applications require 75 °C (167 °F) copper conductors. Non-UL applications can use 75 °C (167 °F) and 90 °C (194 °F) copper conductors.

NOTICE

The plug connector for power is pluggable on drives up to 7.5 kW (10 hp).

The power cable connections are located as shown in Illustration 85. See the *Electrical Data section* for correct dimensioning or motor cable cross-section and length. For protection of the drive, use the recommended fuses unless the unit has built-in fuses. Recommended fuses are listed in 9.5.2 CE Compliance, 9.5.3 UL Compliance (61800-5-1), and 9.5.4 UL Compliance (508C). Ensure that proper fusing complies with local regulations. The connection of mains is fitted to the mains switch, if included.

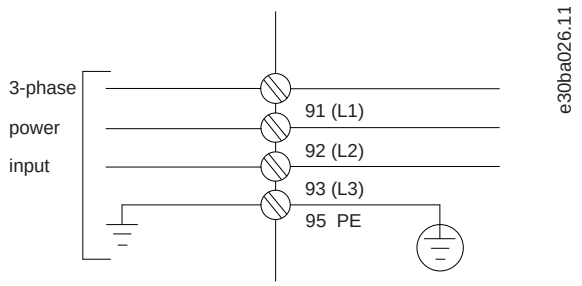

Illustration 85: Connection of Mains

Aluminum conductors

Terminals can accept aluminum conductors, but the conductor surface must be clean, and the oxidation must be removed and sealed by neutral, acid-free Vaseline grease before the conductor is connected. Furthermore, the terminal screw must be retightened after 2 days due to softness of the aluminum. It is crucial to keep the connection a gas tight joint, otherwise the aluminum surface oxidizes again.

NOTICE

The motor cable must be shielded/armored. If an unshielded/unarmored cable is used, some EMC requirements are not complied with. Use a shielded/armored motor cable to comply with EMC emission specifications.

For more information on EMC, see 9.15 EMC-compliant Installation.

Shielding of cables

Avoid installation with twisted shield ends (pigtails). They spoil the shielding effect at higher frequencies. If it is necessary to break the shield to install a motor isolator or contactor, continue the shield at the lowest possible HF impedance. Connect the motor cable shield to both the decoupling plate of the drive and the metal housing of the motor. Make the shield connections with the largest possible surface area (cable clamp) by using the installation devices within the drive.

Cable length and cross-section

The drive has been EMC-tested with a given length of cable. Keep the motor cable as short as possible to reduce noise level and leakage currents.

Switching frequency

When drives are used together with sine-wave filters to reduce the acoustic noise from a motor, the switching frequency must be set according to the instructions in *parameter 14-01 Switching Frequency*.

N O T I C E

In motors without phase insulation, paper, or other insulation reinforcement suitable for operation with voltage supply, use a sine-wave filter on the output of the drive.

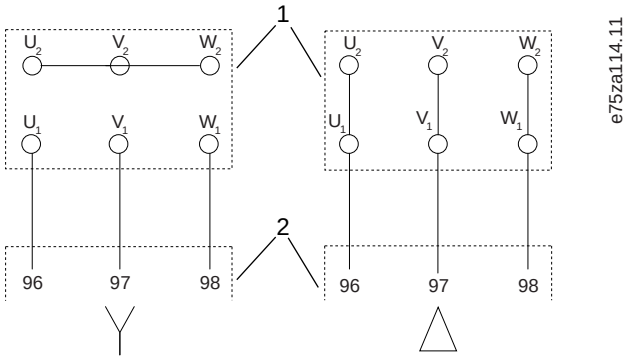

Illustration 86: Motor Cable Connection

1	Motor
2	Drive

9.17.2 IT Grid Connection

Mains supply isolated from ground

If the drive is supplied from an isolated mains source (IT mains, floating delta, or grounded delta) or TT/TN-S mains with grounded leg, the RFI switch is recommended to be turned off via *parameter 14-50 RFI Filter* on the drive and *parameter 14-50 RFI Filter* on the filter. For more detail, see IEC 364-3. In the off position, the filter capacitors between the chassis and the DC link are cut off to avoid damage to the DC link and to reduce the ground capacity currents, according to IEC 61800-3. If optimum EMC performance is needed, or parallel motors are connected, or the motor cable length is above 25 m (82 ft), Danfoss recommends setting *parameter 14-50 RFI Filter* to *[1] On*. Refer also to the Application Note, VLT on IT grid. It is important to use isolation monitors that are rated for use together with power electronics (IEC 61557-8).

Danfoss does not recommend using an output contactor for 525–690 V drives connected to an IT mains network.

9.17.3 DC Bus Connection

N O T I C E

EMC REQUIREMENTS

According to the EMC Directive, a system is defined as a combination of several types of equipment, finished products, and/or components combined, designed and/or put together by the same person (system manufacturer) intended to be placed on the market for distribution as a single functional unit for an end user and intended to be installed and operated together to perform a specific task.

The EMC directive applies to products/systems and installations, but in case the installation is built up of CE-marked products/systems, the installation can also be considered compliant with the EMC directive. Installations shall not be CE marked.

According to the EMC Directive, Danfoss Drives as a manufacturer of product/systems is responsible for obtaining the essential requirements of the EMC directive and attaching the CE mark. For systems involving load sharing and other DC terminals, Danfoss Drives can only ensure compliance to EMC Directive when the end user connects combinations of Danfoss Drives products as described in our technical documentation.

If any third-party products are connected to the load share or other DC terminals on the AC drives, Danfoss Drives cannot guarantee that the EMC requirements are fulfilled.

The DC bus terminal is used for DC back-up, with the DC link being supplied from an external source.

Terminals	Function
88, 89	DC bus

9.17.4 Load Sharing Connection

NOTICE

EMC REQUIREMENTS

According to the EMC Directive, a system is defined as a combination of several types of equipment, finished products, and/or components combined, designed and/or put together by the same person (system manufacturer) intended to be placed on the market for distribution as a single functional unit for an end user and intended to be installed and operated together to perform a specific task.

The EMC directive applies to products/systems and installations, but in case the installation is built up of CE-marked products/systems, the installation can also be considered compliant with the EMC directive. Installations shall not be CE marked.

According to the EMC Directive, Danfoss Drives as a manufacturer of product/systems is responsible for obtaining the essential requirements of the EMC directive and attaching the CE mark. For systems involving load sharing and other DC terminals, Danfoss Drives can only ensure compliance to EMC Directive when the end user connects combinations of Danfoss Drives products as described in our technical documentation.

If any third-party products are connected to the load share or other DC terminals on the AC drives, Danfoss Drives cannot guarantee that the EMC requirements are fulfilled.

Load sharing links together the DC links of several drives. For an overview, see 5.3 Load Sharing.

The load sharing feature requires extra equipment and safety considerations. Consult Danfoss for ordering and installation recommendations.

Terminals	Function
88, 89	Load sharing

9.17.5 Brake Cable Connection

The connection cable to the brake resistor must be shielded and the maximum length from the drive to the DC bar is limited to 25 m (82 ft).

- Use cable clamps to connect the shield to the conductive backplate on the drive and to the metal cabinet of the brake resistor.
- Size the brake cable cross-section to match the brake torque.

Terminals	Function
81, 82	Brake resistor terminals

See the VLT® Brake Resistor MCE 101 Design Guide for more details.

NOTICE

If a short circuit in the brake module occurs, prevent excessive power dissipation in the brake resistor by using a mains switch or contactor to disconnect the mains from the drive.

9.17.6 Grounding

To obtain electromagnetic compatibility (EMC), consider the following basic issues when installing a drive.

- Safety grounding: Note that the drive has a high leakage current and must be grounded appropriately for safety reasons. Apply local safety regulations.
- High-frequency grounding: Keep the ground wire connections as short as possible.

Connect the different ground systems at the lowest possible conductor impedance. The lowest possible conductor impedance is obtained by keeping the conductor as short as possible and by using the greatest possible surface area. The metal cabinets of the different devices are mounted on the cabinet rear plate using the lowest possible HF impedance. This avoids having different HF

voltages for the individual devices and avoids the risk of radio interference currents running in connection cables that may be used between the devices. The radio interference has been reduced. To obtain a low HF impedance, use the fastening bolts of the devices as HF connection to the rear plate. It is necessary to remove insulating paint or similar from the fastening points.

9.17.7 Safety Ground Connection

⚠ W A R N I N G ⚠

LEAKAGE CURRENT HAZARD

Leakage currents exceed 3.5 mA. Failure to ground the drive properly can result in death or serious injury.

- Ensure the correct grounding of the equipment by a certified electrical installer.

The drive has a high leakage current and must be grounded appropriately for safety reasons according to IEC 61800-5-1.

10 Basic Operating Principles

10.1 Introduction

This chapter provides an overview of the primary assemblies and circuitry of a Danfoss VLT® drive. It describes the internal electrical and signal processing functions. A description of the internal control structure is also included.

10.2 Drive Controls

A drive is an electronic controller that supplies a regulated amount of AC power to a 3-phase inductive motor. By supplying variable frequency and voltage to the motor, the drive varies the motor speed or maintains a constant speed as the load on the motor changes. Also, the drive can stop and start a motor without the mechanical stress associated with a line start.

In its basic form, the drive can be divided into 4 main areas:

- A rectifier consisting of SCRs or diodes that convert 3-phase AC voltage to pulsating DC voltage.
- A DC link consisting of inductors and their capacitor banks that stabilize the pulsating DC voltage.
- An inverter using IGBTs to convert the DC voltage to variable voltage and variable frequency AC.
- A control area consisting of software that runs the hardware to produce the variable voltage that controls and regulates the AC motor.

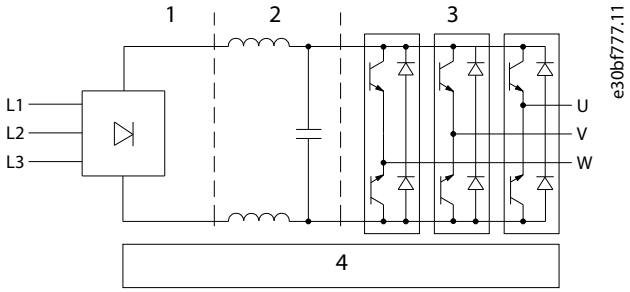

Illustration 87: Internal Processing

1	Rectifier (SCR/diodes)	3	Inverter (IGBTs)
2	DC link (DC bus)	4	Control area

10.3 Reference Limits

The reference range, minimum reference, and maximum reference define the allowed range of the sum of all references. The sum of all references is clamped when necessary. The relation between the resulting reference (after clamping) and the sum of all references are shown in Illustration 88 and Illustration 89.

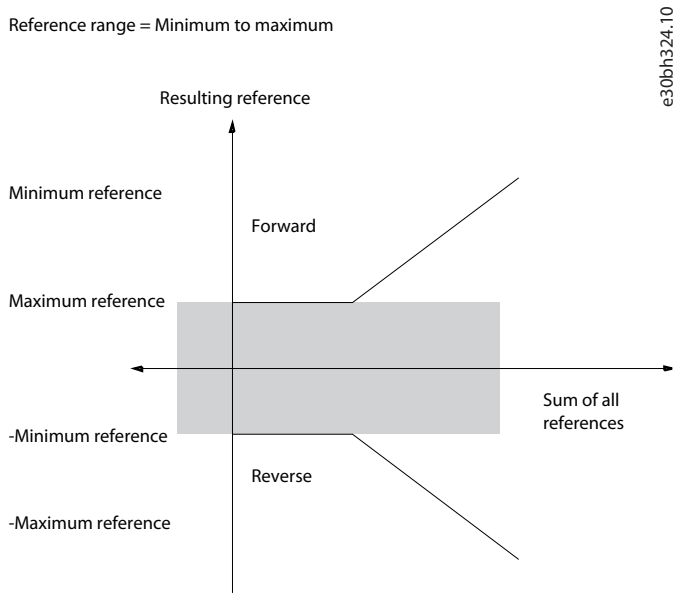

Illustration 88: Sum of All References When Reference Range is Set to 0

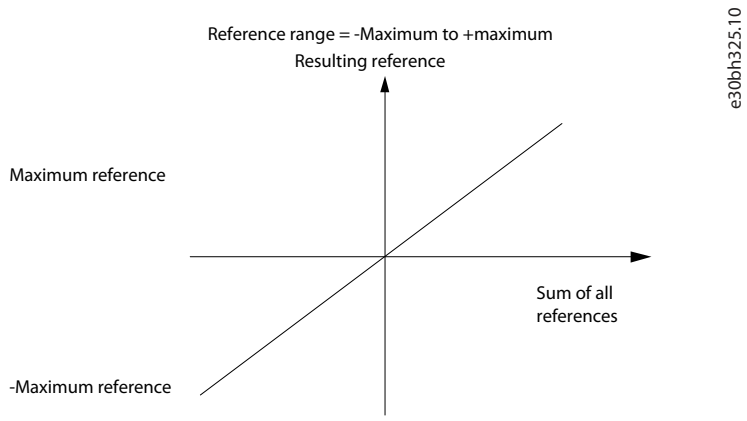

Illustration 89: Sum of All References When Reference Range is Set to 1

The minimum reference cannot be set to less than 0, unless the configuration mode is set to Process. In that case, the following relations between the resulting reference (after clamping) and the sum of all references are as shown in Illustration 90.

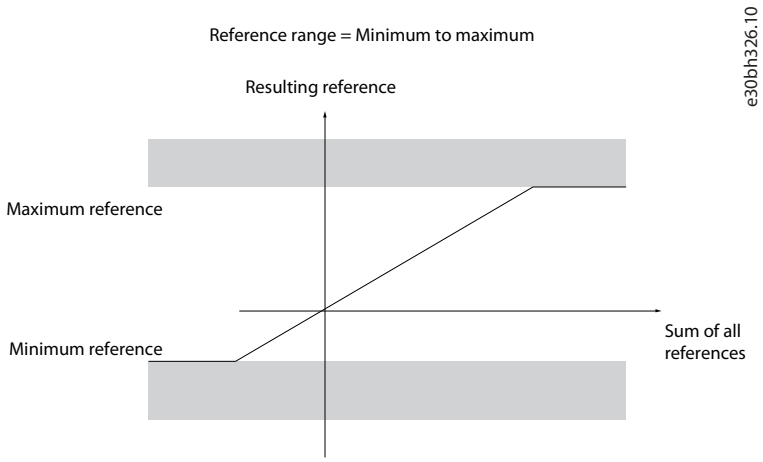

Illustration 90: Sum of all References when Configuration Mode is set to Process

10.4 Control Principle

The drive rectifies AC voltage from mains into DC voltage, after which the DC voltage is converted into an AC current with a variable amplitude and frequency.

The drive supplies the motor with variable voltage/current and frequency, standard induction motors, and non-salient PM motors.

The drive manages various motor control principles such as U/f special motor mode and VVC+. Short-circuit behavior of the drive depends on the 3 current transducers in the motor phases.

The VLT® drives can run in open-loop and closed-loop application. Select the configuration mode when programming the drive.

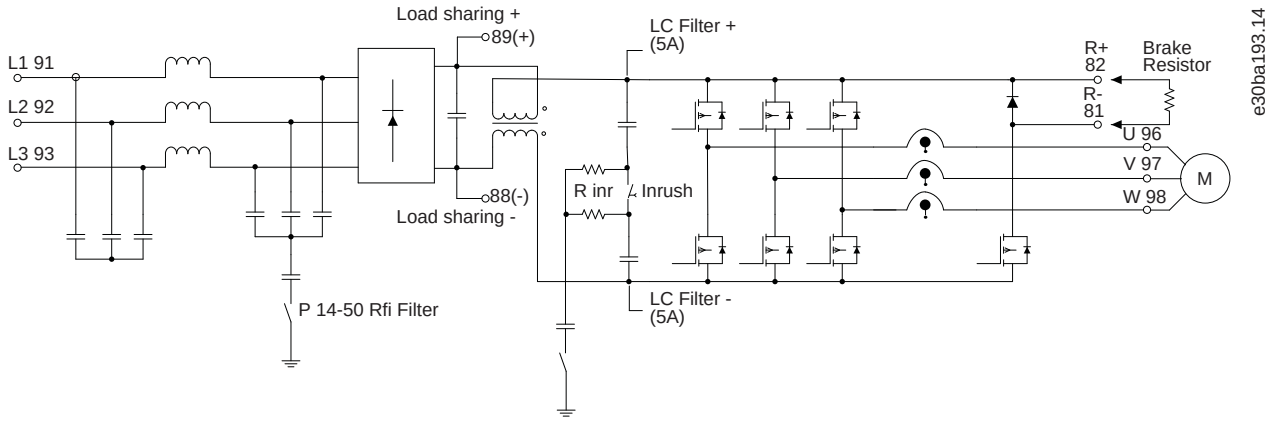

Illustration 91: Control Structure Diagram

10.4.1 Control Structure Open Loop

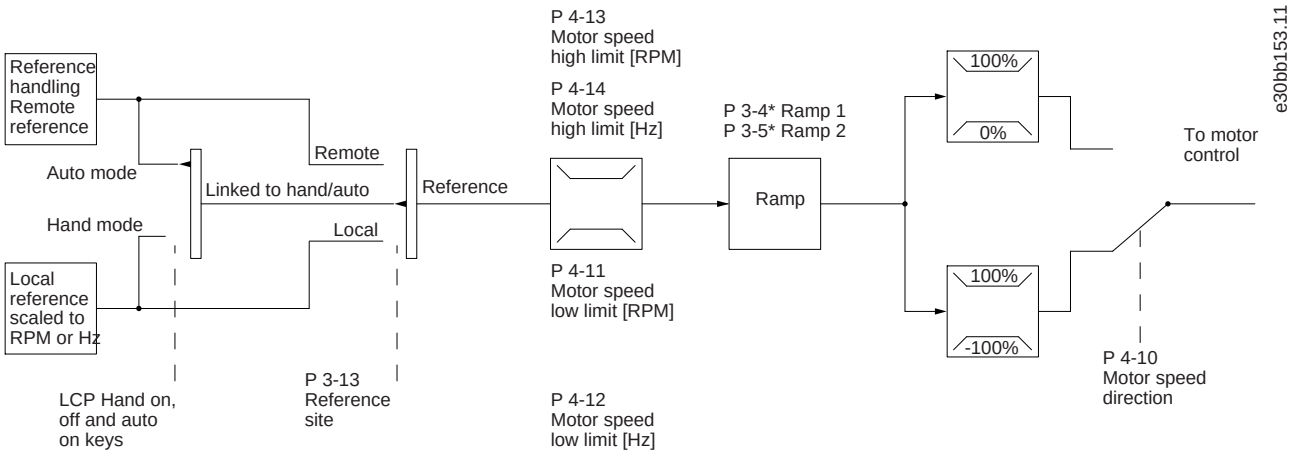

Illustration 92: Open-loop Structure

In open-loop configurations, the resulting reference from the reference handling system or the local reference is received and fed through the ramp limitation and speed limitation before being sent to the motor control.

The output from the motor control is then limited by the maximum frequency limit.

10.4.2 Control Structure Closed Loop

The internal controller allows the drive to become a part of the controlled system. The drive receives a feedback signal from a sensor in the system. It then compares this feedback to a setpoint reference value and determines the error, if any, between these 2 signals. It then adjusts the speed of the motor to correct this error.

For example, consider a pump application where the speed of a pump is to be controlled to ensure a constant static pressure in a pipe. The static pressure value is supplied to the drive as the setpoint reference. A static pressure sensor measures the actual static pressure in the pipe and supplies this data to the drive as a feedback signal. If the feedback signal is greater than the setpoint reference, the drive slows the pump down to reduce the pressure. In a similar way, if the pipe pressure is lower than the setpoint reference, the drive automatically speeds the pump up to increase the pressure provided by the pump.

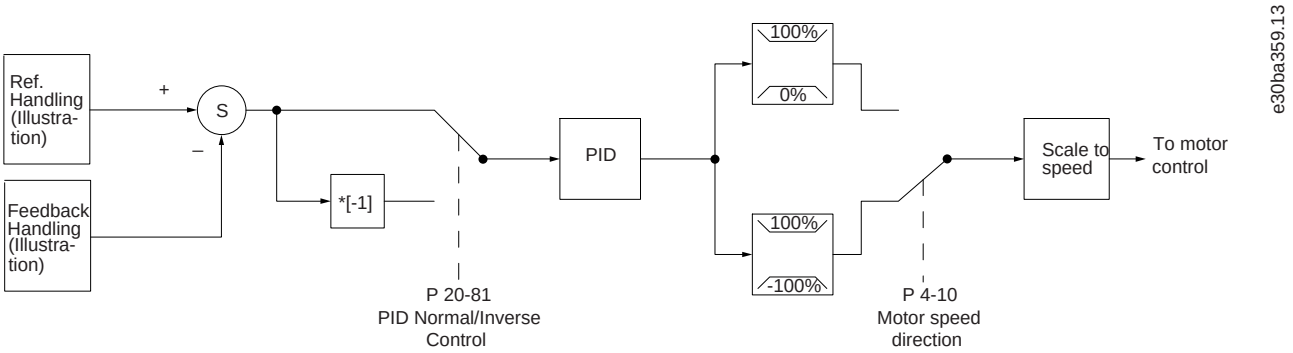

Illustration 93: Control Structure Closed-loop

While the default values for the closed-loop controller of the drive often provide satisfactory performance, the control of the system can often be optimized by adjusting parameters. It is also possible to autotune the PI constants.

10.4.3 Example of Closed-loop PID Control

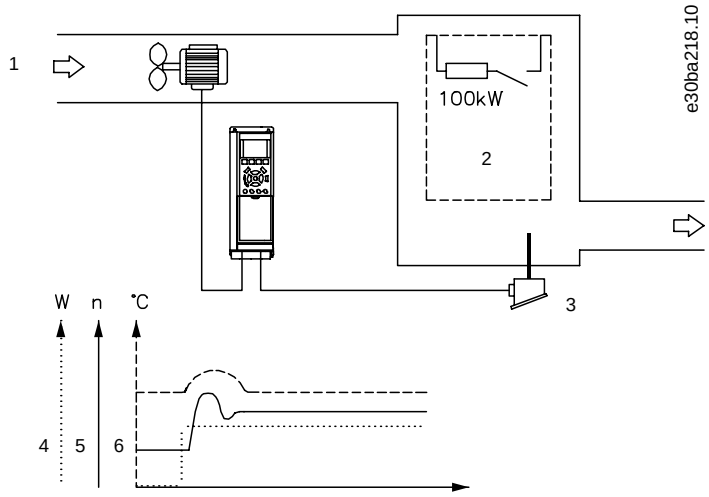

Illustration 94: Closed-loop Control in a Ventilation System

In a ventilation system, the temperature is to be maintained at a constant value. The temperature is set from -5 °C (23 °F) to +35 °C (95 °F) using a 0–10 V potentiometer. Because this is a cooling application, the speed of the fan must be increased to provide more cooling airflow if the temperature is above the setpoint value. The temperature sensor has a range of -10 °C (14 °F) to +40 °C (104 °F) and uses a 2-wire transmitter to provide a 4–20 mA signal. The output frequency range of the drive is 10–50 Hz.

- Start/stop via switch connected between terminals 12 (+24 V) and 18.
- Temperature reference via a potentiometer (-5 °C (23 °F) to +35 °C (95 °F), 0–10 V) connected to terminals 50 (+10 V), 53 (input), and 55 (common).
- Temperature feedback via transmitter (-10 °C (14 °F) to +40 °C (104 °F), 4–20 mA) connected to terminal 54. Switch S202 behind the LCP set to ON (current input).

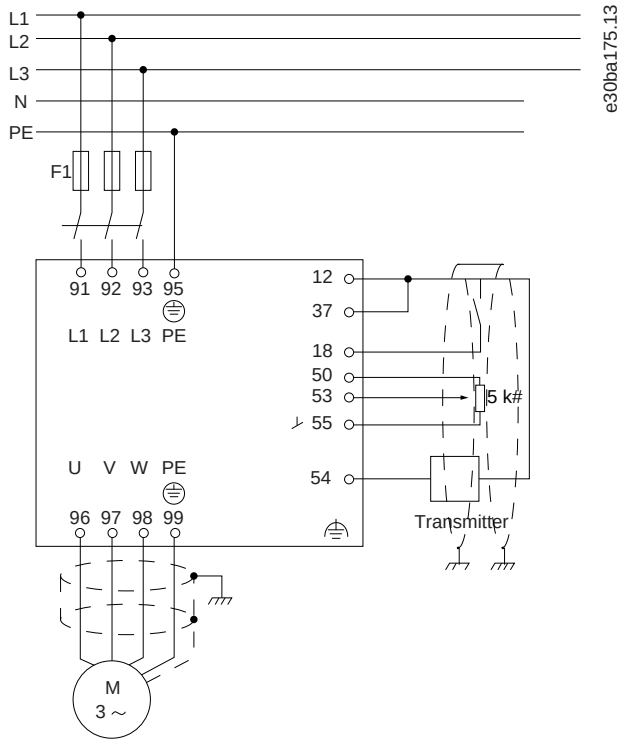

Illustration 95: Example of Closed-loop PID Control

10.4.4 Control Structure in VVC+

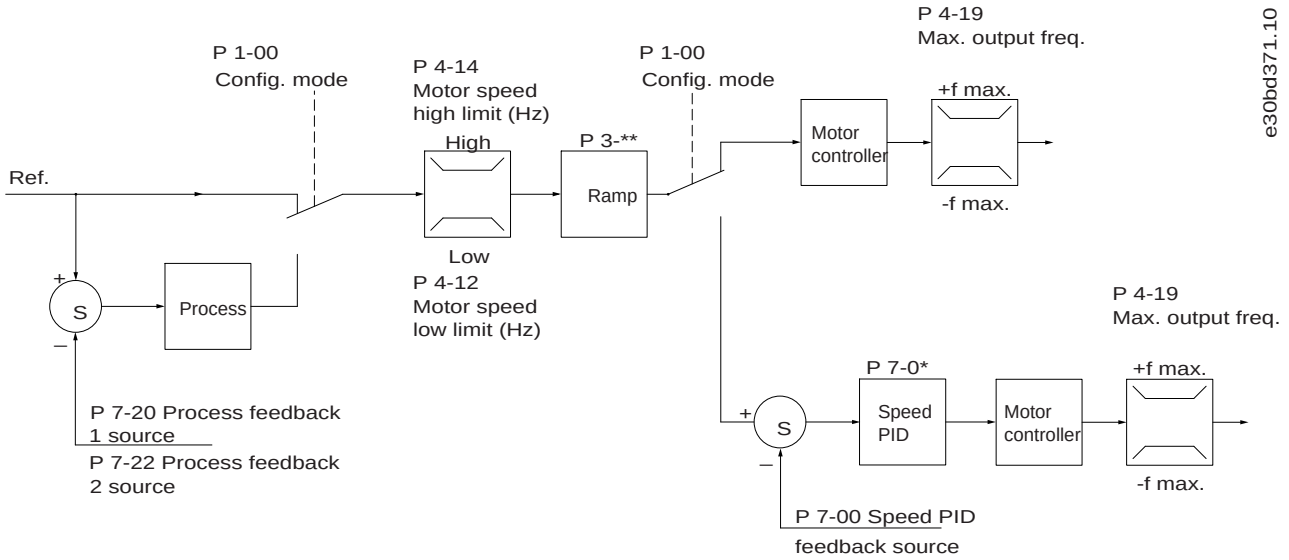

Illustration 96: Control Structure in VVC+ Open-loop Configurations and Closed-loop Configurations

In the configuration shown in above illustration, *parameter 1-01 Motor Control Principle* is set to *[1] VVC+* and *parameter 1-00 Configuration Mode* is set to *[0] Speed open loop*. The resulting reference from the reference handling system is received and fed through the ramp limitation and speed limitation before being sent to the motor control. The output of the motor control is then limited by the maximum frequency limit.

If *parameter 1-00 Configuration Mode* is set to *[1] Speed closed loop*, the resulting reference is passed from the ramp limitation and speed limitation into a speed PID control. The speed PID control parameters are in *parameter group 7-0* Speed PID Ctrl*. The resulting reference from the speed PID control is sent to the motor control limited by the frequency limit.

Select *[3] Process* in *parameter 1-00 Configuration Mode* to use the process PID control for closed-loop control of speed or pressure in the controlled application. The process PID parameters are in *parameter groups 7-2* Process Ctrl. Feedb* and *7-3* Process PID Ctrl*.

11 Basic I/O Configurations

11.1 Application Examples

The examples in this section are intended as a quick reference for common applications.

- Parameter settings are the regional default values unless otherwise indicated (selected in *parameter 0-03 Regional Settings*).
- Parameters associated with the terminals and their settings are shown next to the drawings.
- Required switch settings for analog terminals A53 or A54 are also shown.

11.1.1 Wiring Configuration for Automatic Motor Adaptation (AMA)

Table 103: Wiring Configuration for AMA with T27 Connected

	Parameters	
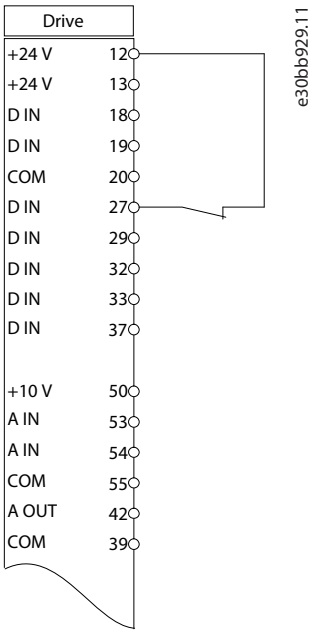	**Function**	**Setting**
	Parameter 1-29 Automatic Motor Adaptation (AMA)	*[1] Enable complete AMA*
	Parameter 5-12 Terminal 27 Digital Input	*[2]* Coast inverse*
	*=Default value	
	Notes/comments: Set *parameter group 1-2* Motor Data* according to motor nameplate.	

11.1.2 Wiring Configuration for Automatic Motor Adaptation without T27

Table 104: AMA without T27 Connected

	Parameters	
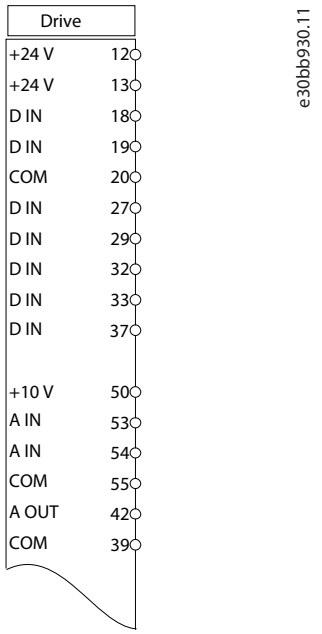	**Function**	**Setting**
	Parameter 1-29 Automatic Motor Adaptation (AMA)	*[1] Enable complete AMA*
	Parameter 5-12 Terminal 27 Digital Input	*[0] No operation*
	*=Default value	
	Notes/comments:*Parameter group 1-2* Motor Data* must be set according to motor.	

11.1.3 Wiring Configuration: Speed

Table 105: Analog Speed Reference (Voltage)

	Parameters	
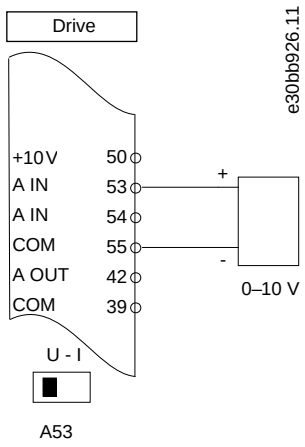	**Function**	**Setting**
	Parameter 6-10 Terminal 53 Low Voltage	0.07 V*
	Parameter 6-11 Terminal 53 High Voltage	10 V*
	Parameter 6-14 Terminal 53 Low Ref./Feedb. value	0 Hz
	Parameter 6-15 Terminal 53 High Ref./Feedb. Value	50 Hz
	*=Default value	
	Notes/comments: D IN 37 is an option.	

Table 106: Analog Speed Reference (Current)

	Parameters	
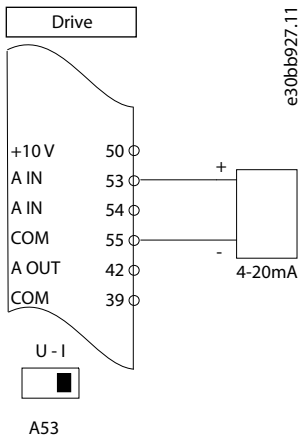	**Function**	**Setting**
	Parameter 6-12 Terminal 53 Low Current	4 mA*
	Parameter 6-13 Terminal 53 High Current	20 mA*
	Parameter 6-14 Terminal 53 Low Ref./Feedb. value	0 Hz
	Parameter 6-15 Terminal 53 High Ref./Feedb. Value	50 Hz
	*=Default value	
	Notes/comments: D IN 37 is an option.	

Table 107: Speed Reference (Using a Manual Potentiometer)

	Parameters	
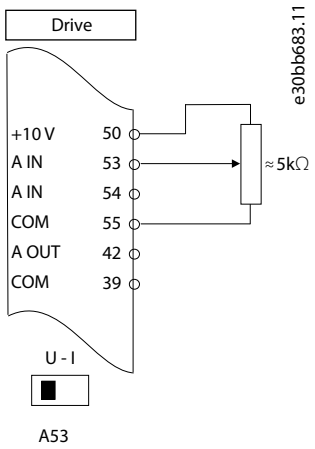	**Function**	**Setting**
	Parameter 6-10 Terminal 53 Low Voltage	0.07 V*
	Parameter 6-11 Terminal 53 High Voltage	10 V*
	Parameter 6-14 Terminal 53 Low Ref./Feedb. value	0 Hz
	Parameter 6-15 Terminal 53 High Ref./Feedb. Value	50 Hz
	*=Default value	
	Notes/comments: D IN 37 is an option.	

Table 108: Speed Up/Down

	Parameter	
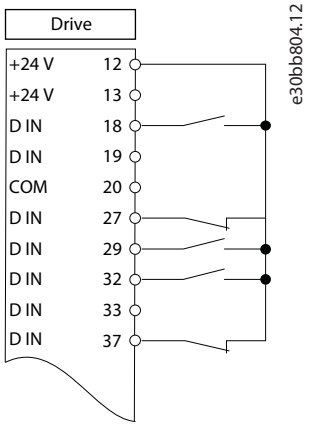	**Function**	**Setting**
	Parameter 5-10 Terminal 18 Digital Input	*[8] Start**
	Parameter 5-12 Terminal 27 Digital Input	*[19] Freeze Reference*
	Parameter 5-13 Terminal 29 Digital Input	*[21] Speed Up*
	Parameter 5-14 Terminal 32 Digital Input	*[22] Speed Down*
	*=Default value	
	Notes/comments: D IN 37 is an option.	

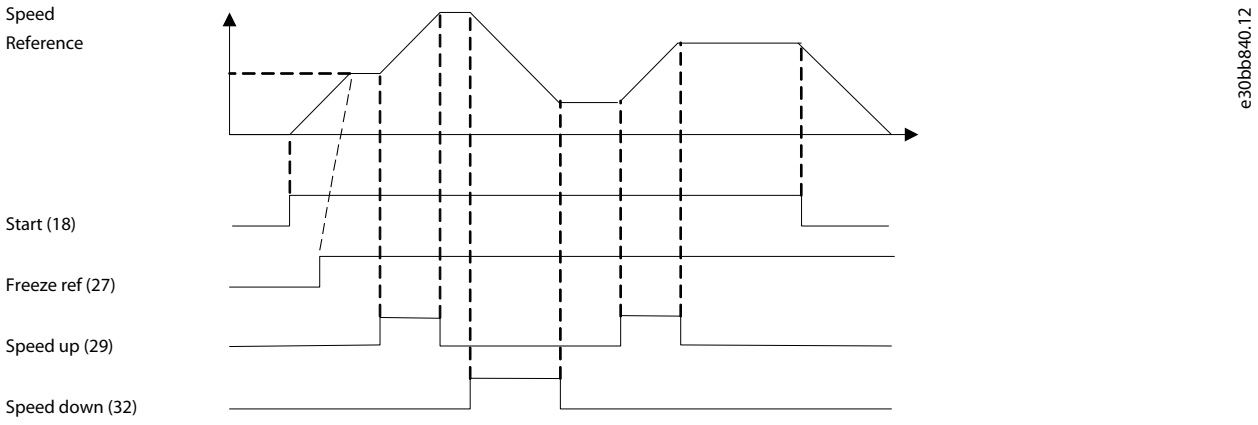

Illustration 97: Speed Up/Down

11.1.4 Wiring Configuration: Feedback

Table 109: Analog Current Feedback Transducer (2-wire)

	Parameters	
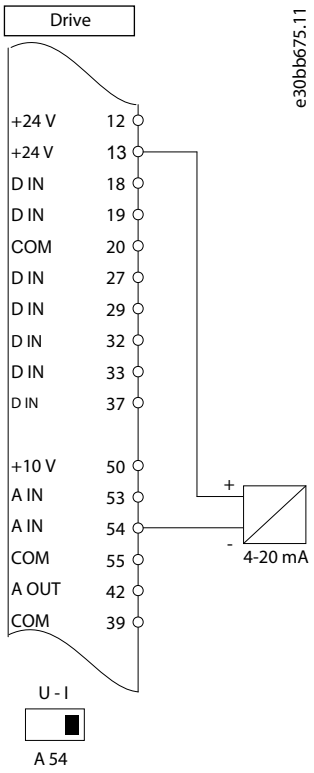	**Function**	**Setting**
	Parameter 6-22 Terminal 54 Low Current	4 mA*
	Parameter 6-23 Terminal 54 High Current	20 mA*
	Parameter 6-24 Terminal 54 Low Ref./Feedb. value	0*
	Parameter 6-25 Terminal 54 High Ref./Feedb. Value	50*
	*=Default value	
	Notes/comments: D IN 37 is an option.	

Table 110: Analog Voltage Feedback Transducer (3-wire)

	Parameters	
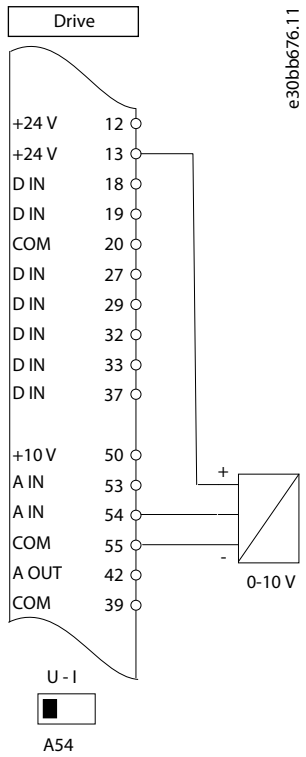	**Function**	**Setting**
	Parameter 6-20 Terminal 54 Low Voltage	0.07 V*
	Parameter 6-21 Terminal 54 High Voltage	10 V*
	Parameter 6-24 Terminal 54 Low Ref./Feedb. value	0*
	Parameter 6-25 Terminal 54 High Ref./Feedb. Value	50*
	*=Default value	
	Notes/comments: D IN 37 is an option.	

Table 111: Analog Voltage Feedback Transducer (4-wire)

	Parameters	
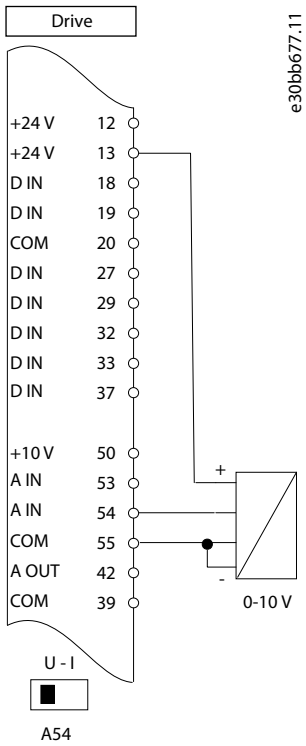	**Function**	**Setting**
	Parameter 6-20 Terminal 54 Low Voltage	0.07 V*
	Parameter 6-21 Terminal 54 High Voltage	10 V*
	Parameter 6-24 Terminal 54 Low Ref./Feedb. value	0*
	Parameter 6-25 Terminal 54 High Ref./Feedb. Value	50*
	*=Default value	
	Notes/comments: D IN 37 is an option.	

11.1.5 Wiring Configuration: Run/Stop

Table 112: Run/Stop Command with External Interlock

	Parameter	
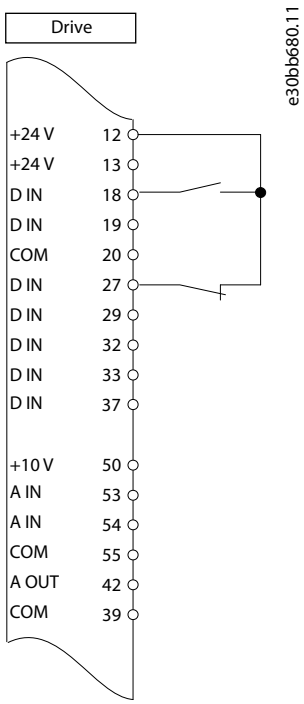	**Function**	**Setting**
	Parameter 5-10 Terminal 18 Digital Input	*[8] Start**
	Parameter 5-12 Terminal 27 Digital Input	*[7] External interlock*
	*=Default value	
	Notes/comments: D IN 37 is an option.	

Table 113: Run/Stop Command without External Interlock

	Parameter	
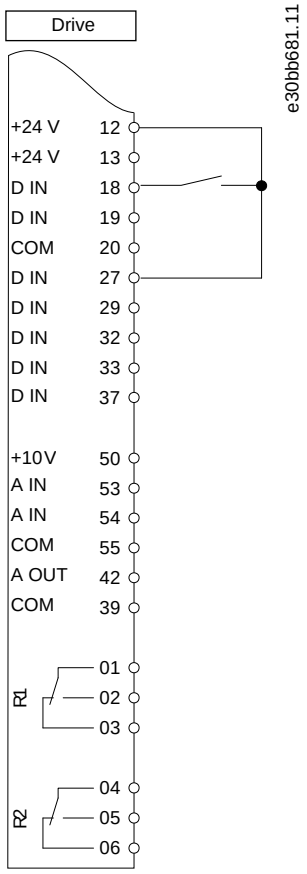	**Function**	**Setting**
	Parameter 5-10 Terminal 18 Digital Input	*[8] Start**
	Parameter 5-12 Terminal 27 Digital Input	*[7] External interlock*
	*=Default value	
	Notes/comments: If *parameter 5-12 Terminal 27 Digital Inputs* is set to *[0] No operation*, a jumper wire to terminal 27 is not needed. D IN 37 is an option.	

Table 114: Run Permissive

	Parameter	
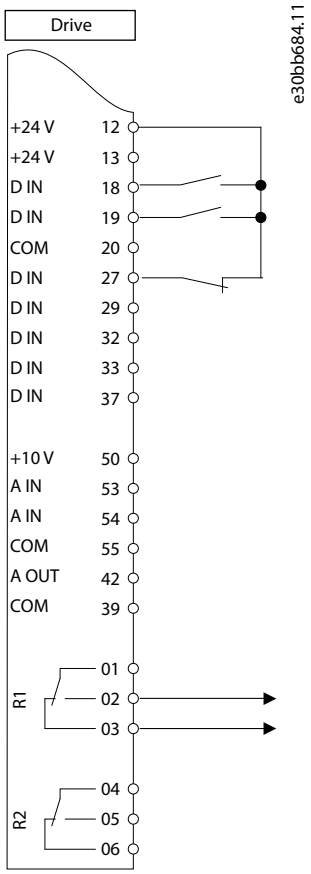	**Function**	**Setting**
	Parameter 5-10 Terminal 18 Digital Input	*[8] Start**
	Parameter 5-11 Terminal 19 Digital Input	*[52] Run permissive*
	Parameter 5-12 Terminal 27 Digital Input	*[7] External interlock*
	Parameter 5-40 Function Relay	*[167] Start command act.*
	*=Default value	
	Notes/comments: D IN 37 is an option.	

11.1.6 Wiring Configuration: Start/Stop

Table 115: Start/Stop Command with Safe Torque Off Option

	Parameter	
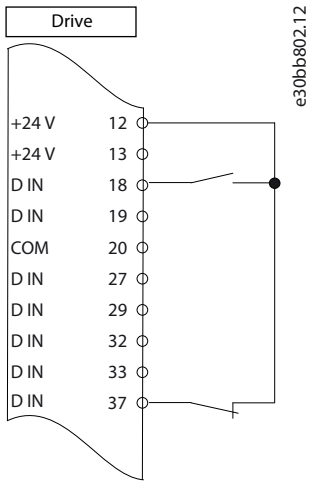	**Function**	**Setting**
	Parameter 5-10 Terminal 18 Digital Input	*[Start]**
	Parameter 5-12 Terminal 27 Digital Input	*[0] No operation*
	Parameter 5-19 Terminal 37 Safe Stop	*[1] Safe Stop Alarm*
	*=Default value	
	Notes/comments: If *parameter 5-12 Terminal 27 Digital Input* is set *[0] No operation*, a jumper wire to terminal 27 is not needed. D IN 37 is an option.	

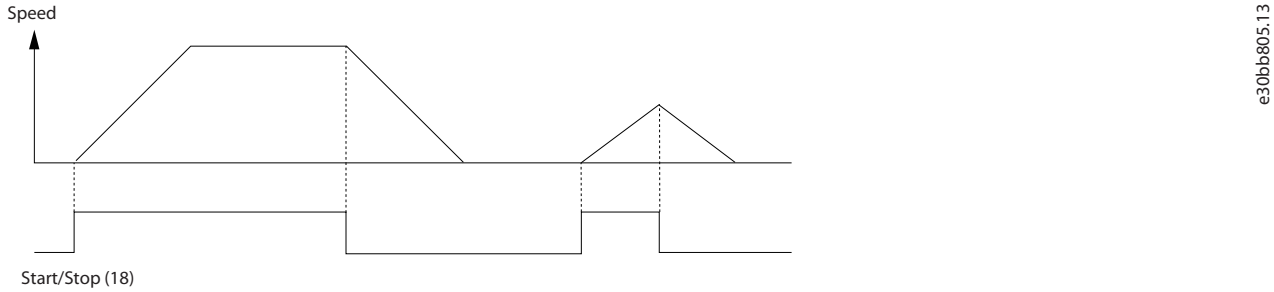

Illustration 98: Start/Stop Command with Safe Torque Off

Table 116: Pulse Start/Stop

	Parameter	
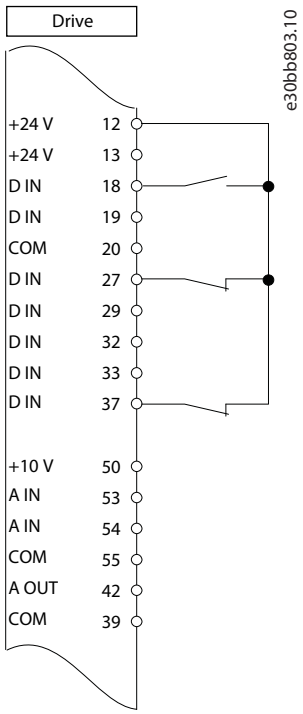	**Function**	**Setting**
	Parameter 5-10 Terminal 18 Digital Input	*[9] Latched Start*
	Parameter 5-12 Terminal 27 Digital Input	*[6] Stop Inverse*
	*=Default value	
	Notes/comments: If *parameter 5-12 Terminal 27 Digital Input* is set *[0] No operation*, a jumper wire to terminal 27 is not needed. D IN 37 is an option.	

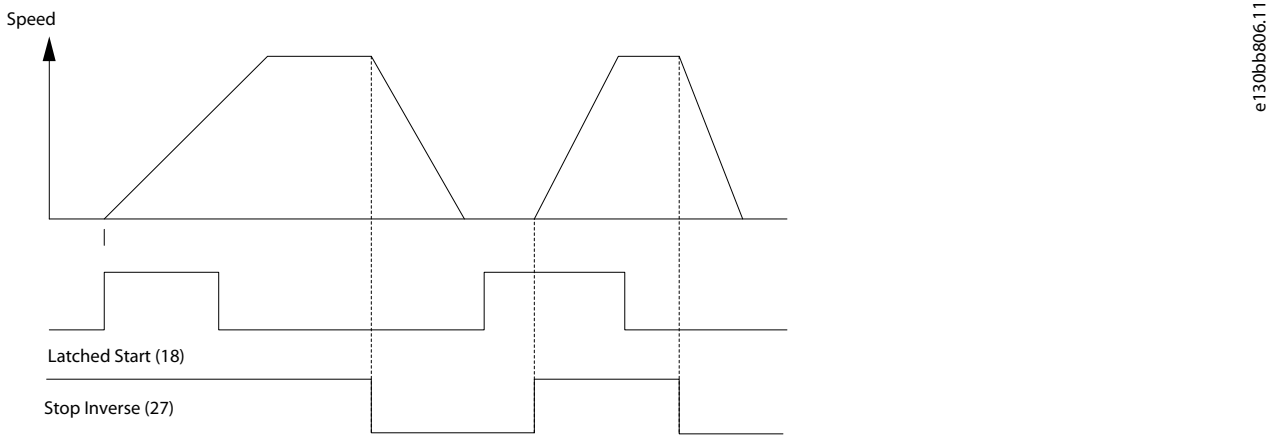

Illustration 99: Latched Start/Stop Inverse

Table 117: Start/Stop with Reversing and 4 Preset Speeds

	Parameters	
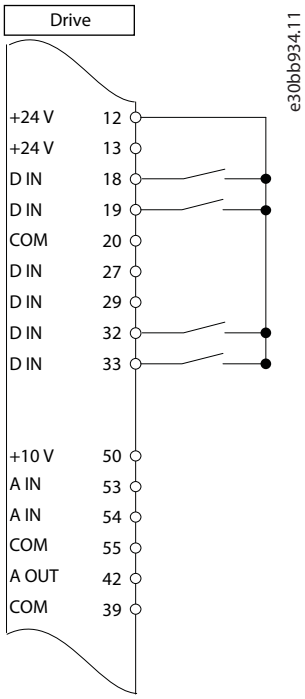	**Function**	**Setting**
	Parameter 5-10 Terminal 18 Digital Input	*[8] Start*
	Parameter 5-11 Terminal 19 Digital Input	*[10] Reversing**
	Parameter 5-12 Terminal 27 Digital Input	*[0] No operation*
	Parameter 5-14 Terminal 32 Digital Input	*[16] Preset ref bit 0*
	Parameter 5-15 Terminal 33 Digital Input	*[17] Preset ref bit 1*
	Parameter 3-10 Preset Reference Preset ref. 0 Preset ref. 1 Preset ref. 2 Preset ref. 3	25% 50% 75% 100%
	*=Default value	
	Notes/comments: D IN 37 is an option.	

11.1.7 Wiring Configuration: External Alarm Reset

Table 118: External Alarm Reset

	Parameter	
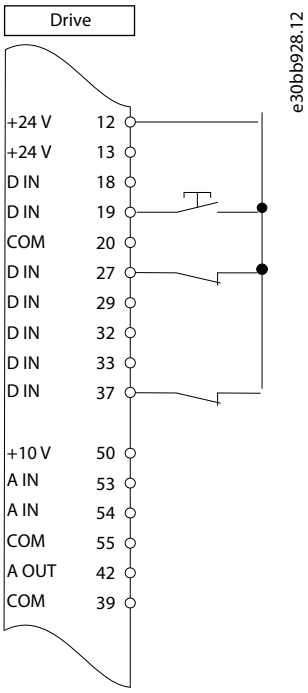	**Function**	**Setting**
	Parameter 5-11 Terminal 19 Digital Input	*[1] Reset*
	*=Default value	
	Notes/comments: D IN 37 is an option.	

11.1.8 Wiring Configuration: RS485

Table 119: RS485 Network Connection

<table>
<tr><th></th><th colspan="2">Parameter</th></tr>
<tr><td rowspan="6"> 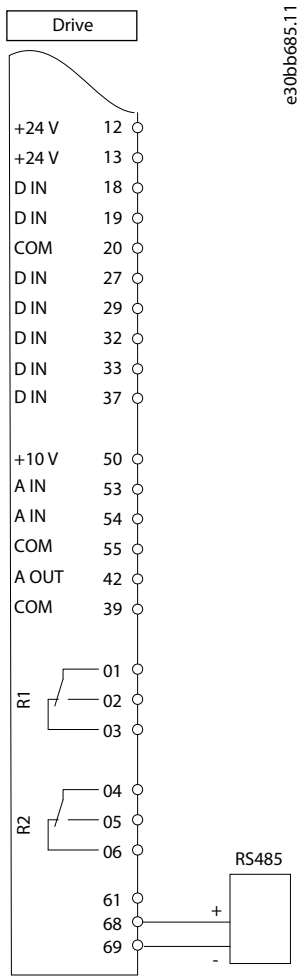
</td><th>Function</th><th>Setting</th></tr>
<tr><td>Parameter 8-30 Protocol</td><td>FC*</td></tr>
<tr><td>Parameter 8-31 Address</td><td>1*</td></tr>
<tr><td>Parameter 8-32 Baud Rate</td><td>9600*</td></tr>
<tr><td colspan="2">*=Default value</td></tr>
<tr><td colspan="2">Notes/comments:
Select protocol, address, and baud rate in the above-mentioned parameters.
D IN 37 is an option.</td></tr>
</table>

11.1.9 Wiring Configuration: Motor Thermistor

Table 120: Motor Thermistor

	Parameters	
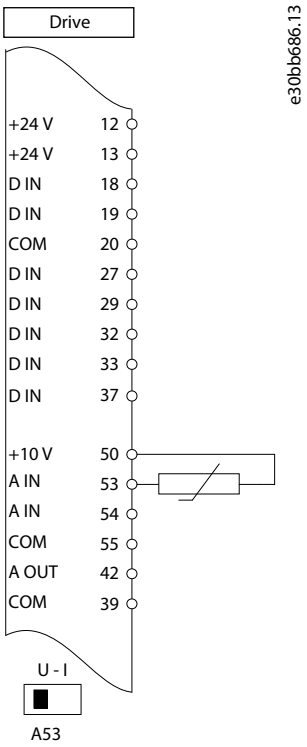	**Function**	**Setting**
	Parameter 1-90 Motor Thermal Protection	*[2] Thermistor trip*
	Parameter 1-93 Thermistor Source	*[1] Analog input 53*
	* = Default value	
	If only a warning is required, set *parameter 1-90 Motor Thermal Protection* to *[1] Thermistor warning*. D IN 37 is an option.	

11.1.10 Wiring Configuration for a Relay Setup with Smart Logic Control

Table 121: Wiring Configuration for a Relay Setup with Smart Logic Control

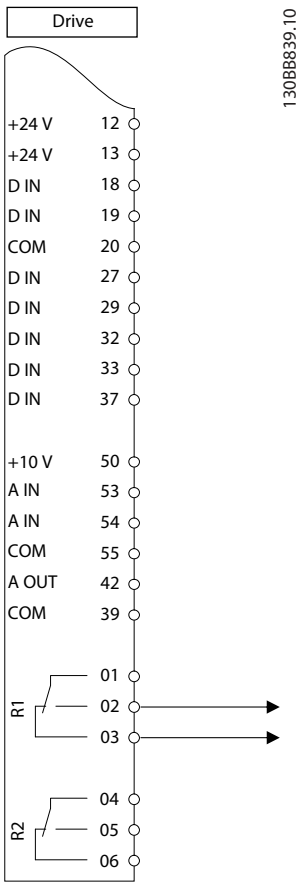

Parameters	
Function	**Setting**
Parameter 4-30 Motor Feedback Loss Function	*[1] Warning*
Parameter 4-31 Motor Feedback Speed Error	100 RPM
Parameter 4-32 Motor Feedback Loss Timeout	5 s
Parameter 7-00 Speed PID Feedback Source	*[2] MCB 102*
Parameter 17-11 Resolution (PPR)	1024*
Parameter 13-00 SL Controller Mode	*[1] On*
Parameter 13-01 Start Event	*[19] Warning*
Parameter 13-02 Stop Event	*[44] Reset key*
Parameter 13-10 Comparator Operand	*[21] Warning no.*
Parameter 13-11 Comparator Operator	*[1] ≈ (equal)**
Parameter 13-12 Comparator Value	90
Parameter 13-51 SL Controller Event	*[22] Comparator 0*
Parameter 13-52 SL Controller Action	*[32] Set digital out A low*
Parameter 5-40 Function Relay	*[80] SL digital output A*
*=Default value	
Notes/comments: If the limit in the feedback monitor is exceeded, *warning 90, Feedback Mon.* is issued. The SLC monitors *warning 90, Feedback Mon.* and if the warning becomes true, relay 1 is triggered. External equipment may require service. If the feedback error goes below the limit again within 5 s, the drive continues and the warning disappears. Reset relay 1 by pressing [Reset] on the LCP.	

12 How to Order a Drive

12.1 Drive Configurator

1	2	3	4	5	6	7	8	9	10	11	12	13	14	15	16	17	18	19	20	21	22	23	24	25	26	27	28	29	30	31	32	33	34	35	36	37	38	39
F	C	-				P				T											X	X	S	X	X	X	X	A		B		C					D	

e30bb836.10

Illustration 100: Type Code Example

Configure the right drive for the right application from the internet-based Drive Configurator and generate the type code string. The Drive Configurator automatically generates an 8-digit sales number to be delivered to the local sales office. Furthermore, it is possible to establish a project list with several products and send it to a Danfoss sales representative.

The Drive Configurator can be found on the global website: www.danfoss.com/drives.

12.1.1 Type Code

An example of the type code is:

FC-102P18KT4E21H1XGCXXXSXXXXAGBKCXXXXDX

The meaning of the characters in the string is in Table 122 and 12.1.1 Type Code. In the example above, a PROFIBUS V1 and a 24 V backup option is built in.

Table 122: Ordering Type Code, Enclosure Sizes A, B, and C

Description	Position	Possible options
Product group	1–3	FC-
Drive series	4–6	102
Power rating	8–10	1.1–90 kW (1.5–110 hp)
Phases	11	3-phases (T)
Mains voltage	11–12	T2: 3x200–240 V T2: 3x115Y/200–139Y/240[1] T4: 3x380–480 V T4: 3x220Y/380–277Y/480[1] T6: 3x525–600 V T7: 3x525–690 V
Enclosure	13–15	E20: IP20/UL Open Type E21: IP21/UL Type 1 E55: IP55/UL Type 12 E66: IP66/UL Type 4X P21: IP21/UL Type 12 (with backplate) P55: IP55/UL Type 12 (with backplate) Z55: A4 enclosure, IP55/UL Type 12 Z66: A4 enclosure, IP66/UL Type 4X
RFI filter	16–17	Hx: No EMC filters built in the drive (600 V units only) H1: Integrated EMC filter. Fulfill EN 55011 Class A1/B and EN/IEC 61800-3 Category 1/2. H2: No extra EMC filter. Fulfill EN 55011 Class A2 and EN/IEC 61800-3 Category 3. H3: Integrated EMC filter. Fulfill EN 55011 class A1/B and EN/IEC 61800-3 Category 1/2. H4: Integrated EMC filter. Fulfill EN 55011 Class A1 and EN/IEC 61800-3 Category 2. H5: Marine versions. Fulfill same emission levels as H2 versions.
Brake	18	B: Brake chopper included

Description	Position	Possible options
		X: No brake chopper included T: Safe Torque Off no brake U: Safe Torque Off brake chopper
Display	19	G: Graphical local control panel (LCP) N: Numerical local control panel (LCP) X: No local control panel
Coating PCB	20	C: Coated PCB R: Ruggedized X: Non-coated PCB
Mains option	21	X: No mains option 1: Mains disconnect 3: Mains disconnect + fuse 5: Disconnect + fuse + load sharing 7: Fuse 8: Mains disconnect + load sharing A: Fuse + load sharing D: Load sharing
Adaptation	22	X: Standard cable entries O: European metric thread in cable entries (A4, A5, B1, B2, C1, and C2 only) S. Imperial cable entries (A5, B1, B2, C1, and C2 only)
Adaptation	23	X: No adaptation 6: UL 61800-5-1 ed 2.0 [(2)(3)]
Software release	24–27	SXXX: Latest release, standard software
Software language	28	X: Not used

[1] Applies if position 23 in the type code = 6: UL 61800-5-1.

[2] Factory installed load share terminal cover for enclosure sizes A2, A3, A5 must not be removed.

[3] Not available with brake or load share options.

Table 123: Ordering Type Code, Options

Description	Position	Possible options
A options	29–30	AX: No A option A0: VLT® PROFIBUS DP-V1 MCA 101 (standard) A4: VLT® DeviceNet MCA 104 (standard) AG: VLT® LonWorks MCA 108 AJ: VLT® BACnet Gateway MCA 109 AL: VLT® PROFINET MCA 120 AN: VLT® EtherNet/IP MCA 121 AQ: VLT® Modbus TCP MCA 122
B options	31–32	BX: No option BK: VLT® General Purpose I/O Option MCB 101 BP: VLT® Relay Option MCB 105 BO: VLT® Analog I/O Option MCB 109

Description	Position	Possible options
		BP: VLT® Relay Option MCB 105 B2: VLT® PTC Thermistor Card MCB 112 B4: VLT® Sensor Input MCB 114
C0 options	33–34	CX: No option
C1 options	35	X: No options
C option software/E1 options	36–37	XX: Standard software
D options	38–39	DX: No option D0: VLT® Extended 24 V DC Backup MCB 107

N O T I C E

For power sizes over 90 kW, see the VLT® HVAC Drive 110–800 kW Design Guide.

12.1.2 Language Packages

Drives are automatically delivered with a language package relevant to the region from which it is ordered. 4 regional language packages cover the following languages:

Table 124: Regional Language Packages

Language package 1	Language package 2	Language package 3	Language package 4
English	English	English	English
German	German	German	German
French	Chinese	Slovenian	Spanish
Danish	Korean	Bulgarian	English US
Spanish	Thai	Romanian	Brazilian Portuguese
Swedish	Traditional Chinese	Hungarian	Turkish
Italian	Bahasa Indonesian	Czech	Polish
Finnish		Russian	

To order drives with a different language package, contact the local sales office.

12.2 Order Numbers for Options and Accessories

12.2.1 Order Numbers for Options for Slot A

Table 125: Order Numbers for A Options

Description	Order number	
	Uncoated	**Coated**
VLT® PROFIBUS DP MCA 101	130B1100	130B1200
VLT® DeviceNet MCA 104	130B1102	130B1202
VLT® LonWorks MCA 108	130B1106	130B1206

Description	Order number	
VLT® BACnet MS/TP MCA 109	130B1144	130B1244
VLT® PROFINET MCA 120	130B1135	130B1235
VLT® EtherNet/IP MCA 121	130B1119	130B1219
VLT® Modbus TCP MCA 122	130B1196	130B1296
VLT® BACnet/IP MCA 125	–	130B1586

12.2.2 Order Numbers for Options for Slot B

Table 126: Order Numbers for B Options

Descriptions	Order number	
	Uncoated	Coated
VLT® General Purpose I/O MCB 101	130B1125	130B1212
VLT® Relay Option MCB 105	130B1110	130B1210
VLT® Analog I/O MCB 109 (including RTC backup)	130B1143	130B1243
VLT® PTC Thermistor Card MCB 112	–	130B1137
VLT® Sensor Input MCB 114	130B1172	130B1272
VLT® Real-time Clock MCB 117	–	130B6544

12.2.3 Order Numbers for Options for Slot C

Table 127: Order Numbers for C Options

Description	Order number	
	Uncoated	Coated
VLT® Extended Relay Card MCB 113	130B1164	130B1264
VLT® Mounting Kit for C Option, 40 mm, enclosure sizes A2/A3	130B7530	
VLT® Mounting Kit for C Option, 60 mm, enclosure sizes A2/A3	130B7531	
VLT® Mounting Kit for C Option, enclosure size A5	130B7532	
VLT® Mounting Kit for C Option, enclosure sizes B/C/D/E/F (except B3)	130B7533	
VLT® Mounting Kit for C Option, 40 mm, enclosure size B3	130B1413	
VLT® Mounting Kit for C Option, 60 mm, enclosure size B3	130B1414	

12.2.4 Order Numbers for Options for Slot D

Table 128: Order Numbers for D Options

Description	Order number	
	Uncoated	Coated
VLT® 24 V Power Supply MCB 107	130B1108	130B1208

12.2.5 Order Numbers for Miscellaneous Hardware

Table 129: Order Numbers for Hardware Options

Description	Ordering number
	Uncoated
VLT® Panel through kit enclosure size A5	130B1028
VLT® Panel through kit enclosure size B1	130B1046
VLT® Panel through kit enclosure size B2	130B1047
VLT® Panel through kit enclosure size C1	130B1048
VLT® Panel through kit enclosure size C2	130B1049
VLT® Mounting brackets for enclosure size A5	130B1080
VLT® Mounting brackets for enclosure size B1	130B1081
VLT® Mounting brackets for enclosure size B2	130B1082
VLT® Mounting brackets for enclosure size C1	130B1083
VLT® Mounting brackets for enclosure size C2	130B1084
VLT® IP 21/Type 1 Kit, enclosure size A2	130B1122
VLT® IP 21/Type 1 Kit, enclosure size A3	130B1123
VLT® IP 21/Type 1 Kit, enclosure size B3	130B1187
VLT® IP 21/Type 1 Kit, enclosure size B4	130B1189
VLT® IP 21/Type 1 Kit, enclosure size C3	130B1191
VLT® IP 21/Type 1 Kit, enclosure size C4	130B1193
VLT® IP 21/Type 1 Top Kit, enclosure size A2	130B1132
VLT® IP 21/Type 1 Top Kit, enclosure size A3	130B1133
VLT® IP 21/Type 1 Top Kit, enclosure size B3	130B1188
VLT® IP 21/Type 1 Top Kit, enclosure size B4	130B1190
VLT® IP 21/Type 1 Top Kit, enclosure size C3	130B1192
VLT® IP 21/Type 1 Top Kit, enclosure size C4	130B1194
VLT® Back plate IP55/Type12, enclosure size A5	130B1098
VLT® Back plate IP21/Type 1, IP55/Type 12, enclosure size B1	130B3383
VLT® Back plate IP21/Type 1, IP55/Type 12, enclosure size B2	130B3397
VLT® Back plate IP21/Type 1, IP55/Type 12, enclosure size C1	130B3910
VLT® Back plate IP21/Type 1, IP55/Type 12, enclosure size C2	130B3911
VLT® Back plate IP66/Type 4X, enclosure size A5	130B3242
VLT® Back plate in stainless steel IP66/Type 4X, enclosure size B1	130B3434
VLT® Back plate in stainless steel IP66/Type 4X, enclosure size B2	130B3465

Description	Ordering number
VLT® Back plate in stainless steel IP66/Type 4X, enclosure size C1	130B3468
VLT® Back plate in stainless steel IP66/Type 4X, enclosure size C2	130B3491
VLT® PROFIBUS Adapter Sub-D9 Connector	130B1112
Terminal block for DC link connection on enclosure sizes A2/A3	130B1064
VLT® Screw terminals	130B1116
VLT® USB extension, 350 mm (13.8 in) cable	130B1155
VLT® USB extension, 650 mm (25.6 in) cable	130B1156

12.2.6 Order Numbers for Local Control Panel Options

Table 130: Order Numbers for Local Control Panels

Description	Order number
VLT® LCP 101 Numeric Local Control Pad	130B1124
VLT® LCP 102 Graphical Local Control Pad	130B1107
VLT® Wireless Control Panel LCP 103	134B0460
VLT® Cable for LCP 2, 3 m (9.8 ft)	175Z0929
VLT® Panel Mounting Kit for all LCP types	130B1170
VLT® Panel Mounting Kit with graphical LCP	130B1113
VLT® Panel Mounting Kit with numerical LCP	130B1114
VLT® LCP Mounting Kit, without LCP	130B1117
VLT® LCP Mounting Kit Blind Cover IP55/66, 8 m (26.2 ft)	130B1129
VLT® Control Panel LCP 102, graphical	130B1078
VLT® Blind cover, with Danfoss logo, IP55/66	130B1077
Remote mounting kit for LCP with cover for outdoor mounting with 3 m (10 ft) cable	134B5223
Remote mounting kit for LCP with cover for outdoor mounting with 5 m (16 ft) cable	134B5224
Remote mounting kit for LCP with cover for outdoor mounting with 10 m (33 ft) cable	134B5225

12.2.7 Order Numbers for PC Software

Table 131: Order Numbers for VLT® Motion Control Tool MCT 10

Description	Order number
VLT® Motion Control Tool MCT 10, 1 license	130B1000
VLT® Motion Control Tool MCT 10, 5 licenses	130B1001
VLT® Motion Control Tool MCT 10, 10 licenses	130B1002
VLT® Motion Control Tool MCT 10, 25 licenses	130B1003

Description	Order number
VLT® Motion Control Tool MCT 10, 50 licenses	130B1004
VLT® Motion Control Tool MCT 10, 100 licenses	130B1005
VLT® Motion Control Tool MCT 10, >100 licenses	130B1006

12.2.8 Ordering of Brake Resistors

Explanation of terms used in the tables for ordering brake resistors

Horizontal braking: Duty cycle 10% and maximum 120 s repetition rates according to the reference brake profile. Average power corresponds to 6%.

Vertical braking: Duty cycle 40% and maximum 120 s repetition rates according to the reference brake profile. Average power corresponds to 27%.

Cable cross-section: Recommended minimum value based on PVC-insulated copper cable, 30 °C (86 °F) ambient temperature with normal heat dissipation. All cabling must comply with national and local regulations on cable cross-sections and ambient temperature.

Thermal relay: Brake current setting of external thermal relay. All resistors have a built-in thermal relay switch N.C.

The IP54 is with 1000 mm (39.4 in) fixed, unshielded cable. Can be used for vertical and horizontal mounting. For horizontal mounting, derating is required.

IP21 and IP65 are with screw terminal for cable termination and can be used for horizontal and vertical mounting. For horizontal mounting, derating is required.

IP20 is with bolt connection for cable termination. Used for floor mounting.

IP65 is a flat-pack type brake resistor with fixed cable.

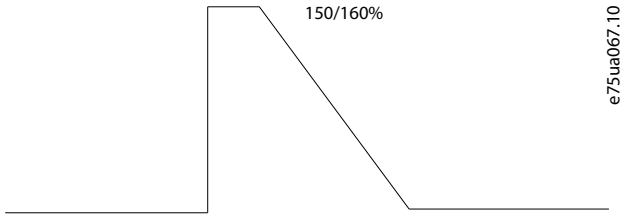

Illustration 101: Horizontal Loads

Illustration 102: Vertical Loads

12.2.8.1 Order Numbers for Brake Resistors, T2, Horizontal Braking 10% Duty Cycle

Table 132: Order Numbers for Brake Resistors, T2, Horizontal Braking 10% Duty Cycle

FC 102				Horizontal braking 10% duty cycle							
Drive data				Brake resistor data						Installation	
						Danfoss part numbers					
Mains type	P_m [kW]	R_{min} [Ω]	$R_{br.nom}$ [Ω]	R_{rec} [Ω]	$P_{br.cont}$ [kW]	Wire IP54	Screw terminal IP65	Screw terminal IP20	Bolt connection IP20	Cable cross-section [mm² (AWG)]	Thermo relay [A]

FC 102				Horizontal braking 10% duty cycle							
T2	1.1 (1.5)	130	152.9	145	0.100	175U3016	–	–	–	1.5 (16)	0.8
T2	1.5 (2.0)	81	110.5	100	0.100	175U3021	–	–	–	1.5 (16)	0.9
T2	2.2 (3.0)	58.5	74.1	70	0.200	175U3026	–	–	–	1.5 (16)	1.6
T2	3.0 (4.0)	45	53.7	48	0.200	175U3031	–	–	–	1.5 (16)	1.9
T2	3.7 (5.0)	31.5	39.9	35	0.300	175U3325	–	–	–	1.5 (16)	2.7
T2	5.5 (7.5)	22.5	28.7	27	0.360	175U3326	175U3477	175U3478	–	1.5 (16)	3.5
T2	7.5 (10)	17.7	20.8	18	0.570	175U3327	175U3442	175U3441	–	1.5 (16)	5.3
T2	11 (15)	12.6	14	13	0.680	175U3328	175U3059	175U3060	–	1.5 (16)	6.8
T2	15 (20)	8.7	10.2	9.0	1.130	175U3329	175U3068	175U3069	–	2.5 (14)	10.5
T2	18.5 (25)	5.3	8.2	5.7	1.400	175U3330	175U3073	175U3074	–	4 (12)	14.7
T2	22 (30)	5.1	6.9	5.7	1.700	175U3331	175U3483	175U3484	–	4 (12)	16
T2	30 (40)	3.2	5.0	3.5	2.200	175U3332	175U3080	175U3081	–	6 (10)	24
T2	37 (50)	3.0	4.1	3.5	2.800	175U3333	175U3448	175U3447	–	10 (8)	27
T2	45 (60)	2.4	3.3	2.8	3.200	175U3334	175U3086	175U3087		16 (6)	32

12.2.8.2 Order Numbers for Brake Resistors, T2, Vertical Braking 40% Duty Cycle

Table 133: Order Numbers for Brake Resistors, T2, Vertical Braking 40% Duty Cycle

FC 102				Vertical braking 40% duty cycle							
Drive data				Brake resistor data						Installation	
						Danfoss part numbers					
Mains type	P_m [kW]	R_{min} [Ω]	$R_{br.nom}$ [Ω]	R_{rec} [Ω]	$P_{br.cont}$ [kW]	Wire IP54	Screw terminal IP65	Screw terminal IP20	Bolt connection IP20	Cable cross-section [mm^2 (AWG)]	Thermo relay [A]
T2	1.1 (1.5)	130	152.9	145	0.300	175U3300	–	–	–	1.5 (16)	1.3

FC 102				Vertical braking 40% duty cycle							
T2	1.5 (2.0)	81	110.5	100	0.450	175U3301	175U3402	175U3401	–	1.5 (16)	2.0
T2	2.2 (3.0)	58.5	74.1	70	0.570	175U3302	175U3404	175U3403	–	1.5 (16)	2.7
T2	3.0 (4.0)	45	53.7	48	0.960	175U3303	175U3406	175U3405	–	1.5 (16)	4.2
T2	3.7 (5.0)	31.5	39.9	35	1.130	175U3304	175U3408	175U3407	–	1.5 (16)	5.4
T2	5.5 (7.5)	22.5	28.7	27	1.400	175U3305	175U3410	175U3409	–	1.5 (16)	6.8
T2	7.5 (10)	17.7	20.8	18	2.200	175U3306	175U3412	175U3411	–	1.5 (16)	10.4
T2	11 (15)	12.6	14	13	3.200	175U3307	175U3414	175U3413	–	2.5 (14)	14.7
T2	15 (20)	8.7	10.2	9.0	5.500	–	175U3176	175U3177	–	4 (12)	23
T2	18.5 (25)	5.3	8.2	5.7	6.000	–	–	–	175U3233	10 (8)	33
T2	22 (30)	5.1	6.9	5.7	8.000	–	–	–	175U3234	10 (8)	38
T2	30 (40)	3.2	5.0	3.5	9.000	–	–	–	175U3235	16 (6)	51
T2	37 (50)	3.0	4.1	3.5	14.000	–	–	–	175U3224	25 (4)	63
T2	45 (60)	2.4	3.3	2.8	17.000	–	–	–	175U3227	35 (2)	78

12.2.8.3 Order Numbers for Brake Resistors, T2, Flat-pack for Horizontal Conveyors

Table 134: Flat-pack IP65 Brake Resistors for Horizontal Conveyors, 200–240 V Drives, T2

			Flat-pack IP65 for horizontal conveyors			
FC 102 T2	**P_m [kW (hp)]**	**R_{min} [Ω]**	**$R_{br,nom}$ [Ω]**	**R_{rec} per item [Ω/W]**	**Duty cycle [%]**	**Order number**
P1K1	1.1 (1.5)	130	152.9	150/100	9	175U1005
P1K1	1.1 (1.5)	130	152.9	150/100	18	175U0989
P1K5	1.5 (2.0)	81	110.5	100/100	7	175U1006
P1K5	1.5 (2.0)	81	110.5	100/200	14	175U0991
P2K2	2.2 (3.0)	58.5	74.1	72/200	9	175U0992
P3K0	3.0 (4.0)	45	53.7	50/200	7	175U0993
P3K7	3.7 (5.0)	31.5	39.9	35/200	6	175U0994
P3K7	3.7 (5.0)	31.5	39.9	72/200	11	2 x 175U0992

12.2.8.4 Order Numbers for Brake Resistors, T4, Horizontal Braking 10% Duty Cycle

Table 135: Order Numbers for Brake Resistors, T4, Horizontal Braking 10% Duty Cycle

FC 102				Horizontal braking 10% duty cycle							
Drive data				Brake resistor data						Installation	
						Danfoss part numbers					
Mains type	P_m [kW]	R_{min} [Ω]	$R_{br.nom}$ [Ω]	R_{rec} [Ω]	$P_{br.cont}$ [kW]	Wire IP54	Screw terminal IP65	Screw terminal IP20	Bolt connection IP20	Cable cross-section [mm^2 (AWG)]	Thermo relay [A]
T4	1.1 (1.5)	546	607.3	630	0.100	175U3002	–	–	–	1.5 (16)	0.4
T4	1.5 (2.0)	382	437.3	410	0.100	175U3004	–	–	–	1.5 (16)	0.5
T4	2.2 (3.0)	260	293.3	270	0.200	175U3007	–	–	–	1.5 (16)	0.8
T4	3.0 (4.0)	189	212.7	200	0.200	175U3008	–	–	–	1.5 (16)	0.9
T4	4.0 (5.0)	135	157.3	145	0.300	175U3300	–	–	–	1.5 (16)	1.3
T4	5.5 (7.5)	99	113.3	110	0.450	175U3335	175U3450	175U3449	–	1.5 (16)	1.9
T4	7.5 (10)	72	82.4	80	0.570	175U3336	175U3452	175U3451	–	1.5 (16)	2.5
T4	11 (15)	50	55.3	56	0.680	175U3337	175U3027	175U3028	–	1.5 (16)	3.3
T4	15 (20)	36	40.3	38	1.130	175U3338	175U3034	175U3035	–	1.5 (16)	5.2
T4	18.5 (25)	27	32.5	28	1.400	175U3339	175U3039	175U3040	–	1.5 (16)	6.7
T4	22 (30)	20.3	27.2	22	1.700	175U3340	175U3047	175U3048	–	1.5 (16)	8.3
T4	30 (40)	18	19.8	19	2.200	175U3357	175U3049	175U3050	–	1.5 (16)	10.1
T4	37 (50)	13.4	16	14	2.800	175U3341	175U3055	175U3056	–	2.5 (14)	13.3
T4	45 (60)	10.8	13.1	12	3.200	175U3359	175U3061	175U3062	–	2.5 (14)	15.3
T4	55 (75)	8.8	10.7	9.5	4.200	–	175U3065	175U3066	–	4 (12)	20
T4	75 (100)	6.5	7.8	7.0	5.500	–	175U3070	175U3071	–	6 (10)	26
T4	90 (125)	4.2	6.5	5.5	7.000	–	–	–	175U3231	10 (8)	36
T4	110 (150)	3.6	5.3	4.7	9.000	–	–	–	175U3079	16 (6)	44
T4	132 (175)	3.0	4.4	3.7	11.000	–	–	–	175U3083	25 (4)	55

FC 102				Horizontal braking 10% duty cycle							
T4	160 (250)	2.5	3.6	3.3	13.000	–	–	–	175U3084	35 (2)	63
T4	200 (300)	2.0	2.9	2.7	16.000	–	–	–	175U3088	50 (1-1/0)	77
T4	250 (350)	1.6	2.3	2.1	20.000	–	–	–	175U3091	70 (2/0)	98
T4	315 (450)	1.2	1.8	1.7	26.000	–	–	–	175U3093	2 x 35 (2 x 2)	124
T4	355 (475)	1.2	1.6	1.3	32.000	–	–	–	175U3097	2 x 35 (2 x 2)	157
T4	400 (550)	1.2	1.4	1.2	36.000	–	–	–	175U3098	2 x 50 (2 x 1-1/0)	173
T4	450 (600)	1.1	1.3	1.1	42.000	–	–	–	175U3099	2 x 50 (2 x 1-1/0)	196
T4	500 (650)	0.9	1.1	2 x 1.9	–	–	–	–	–	–	–
T4	560 (750)	0.9	1.0	2 x 1.7	–	–	–	–	–	–	–
T4	630 (850)	0.8	0.9	2 x 1.5	–	–	–	–	–	–	–
T4	710 (950)	0.7	0.8	2 x 1.3	–	–	–	–	–	–	–
T4	800 (1075)	0.6	0.7	3 x 1.8	–	–	–	–	–	–	–
T4	1000 (1350)	0.5	0.6	3 x 1.6	–	–	–	–	–	–	–

12.2.8.5 Order Numbers for Brake Resistors, T4, Vertical Braking 40% Duty Cycle

Table 136: Order Numbers for Brake Resistors, T4, Vertical Braking 40% Duty Cycle

FC 102				Vertical braking 40% duty cycle							
Drive data				Brake resistor data						Installation	
						Danfoss part numbers					
Mains type	P_m [kW]	R_{min} [Ω]	$R_{br.nom}$ [Ω]	R_{rec} [Ω]	$P_{br.cont}$ [kW]	Wire IP54	Screw terminal IP65	Screw terminal IP20	Bolt connection IP20	Cable cross-section [mm² (AWG)]	Thermo relay [A]
T4	1.1 (1.5)	546	607.3	630	0.300	175U3309	–	–	–	1.5 (16)	0.7
T4	1.5 (2.0)	382	437.3	410	0.450	175U3310	175U3416	175U3415	–	1.5 (16)	1.0

FC 102				Vertical braking 40% duty cycle							
T4	2.2 (3.0)	260	293.3	270	0.570	175U3311	175U3418	175U3417	–	1.5 (16)	1.4
T4	3.0 (4.0)	189	212.7	200	0.960	175U3312	175U3420	175U3419	–	1.5 (16)	2.1
T4	4.0 (5.0)	135	157.3	145	1.130	175U3313	175U3422	175U3421	–	1.5 (16)	2.7
T4	5.5 (7.5)	99	113.3	110	1.700	175U3314	175U3424	175U3423	–	1.5 (16)	3.7
T4	7.5 (10)	72	82.4	80	2.200	175U3315	175U3138	175U3139	–	1.5 (16)	5.0
T4	11 (15)	50	55.3	56	3.200	175U3316	175U3428	175U3427	–	1.5 (16)	7.1
T4	15 (20)	36	40.3	38	5.000	–	–	–	175U3236	1.5 (16)	11.5
T4	18.5 (25)	27	32.5	28	6.000	–	–	–	175U3237	2.5 (14)	14.7
T4	22 (30)	20.3	27.2	22	8.000	–	–	–	175U3238	4 (12)	19
T4	30 (40)	18	19.8	19	10.000	–	–	–	175U3203	4 (12)	23
T4	37 (50)	13.4	16	14	14.000	–	–	–	175U3206	10 (8)	32
T4	45 (60)	10.8	13.1	12	17.000	–	–	–	175U3210	10 (8)	38
T4	55 (75)	8.8	10.7	9.5	21.000	–	–	–	175U3213	16 (6)	47
T4	75 (100)	6.5	7.8	7.0	26.000	–	–	–	175U3216	25 (4)	61
T4	90 (125)	4.2	6.5	5.5	36.000	–	–	–	175U3219	35 (2)	81
T4	110 (150)	3.6	5.3	4.7	42.000	–	–	–	175U3221	50 (1-1/0)	95
T4	132 (175)	3.0	4.4	3.7	52.000	–	–	–	175U3223	70 (2/0)	119
T4	160 (250)	2.5	3.6	3.3	60.000	–	–	–	175U3225	2 x 35 (2 x 2)	135
T4	200 (300)	2.0	2.9	2.7	78.000	–	–	–	175U3228	2 x 50 (2 x 1-1/0)	170
T4	250 (350)	1.6	2.3	2.1	90.000	–	–	–	175U3230	2 x 70 (2 x 2/0)	207
T4	315 (450)	1.2	1.8	1.7	–	–	–	–	–	–	–
T4	355 (475)	1.2	1.6	1.3	–	–	–	–	–	–	–
T4	400 (550)	1.2	1.4	1.2	–	–	–	–	–	–	–
T4	450 (600)	1.1	1.3	1.1	–	–	–	–	–	–	–

FC 102				Vertical braking 40% duty cycle							
T4	500 (650)	0.9	1.1	2 x 1.9	–	–	–	–	–	–	–
T4	560 (750)	0.9	1.0	2 x 1.7	–	–	–	–	–	–	–
T4	630 (850)	0.8	0.9	2 x 1.5	–	–	–	–	–	–	–
T4	710 (950)	0.7	0.8	2 x 1.3	–	–	–	–	–	–	–
T4	800 (1075)	0.6	0.7	3 x 1.8	–	–	–	–	–	–	–
T4	1000 (1350)	0.5	0.6	3 x 1.6	–	–	–	–	–	–	–

12.2.8.6 Order Numbers for Brake Resistors, T4, Flat-pack for Horizontal Conveyors

Table 137: Flat-pack IP65 Brake Resistors for Horizontal Conveyors, 380–480 V Drives, T4

			Flat-pack IP65 for horizontal conveyors			
FC 102 T4	**P_m [kW]**	**R_{min} [Ω]**	**$R_{br,nom}$ [Ω]**	**R_{rec} per item [Ω/W]**	**Duty cycle [%]**	**Ordering number**
P1K1	1.1 (1.5)	546	607.3	620/100	9	175U1001
P1K1	1.1 (1.5)	546	607.3	620/200	18	175U0982
P1K5	1.5 (2.0)	382	437.3	430/100	7	175U1002
P1K5	1.5 (2.0)	382	437.3	430/200	14	175U0983
P2K2	2.2 (3.0)	260	293.3	310/200	9	175U0984
P3K0	3.0 (4.0)	189	212.7	210/200	7	175U0987
P4K0	4.0 (5.0)	135	157.3	150/200	5	175U0989
P4K0	4.0 (5.0)	135	157.3	300/200	20	2 x175U0985
P5K5	5.5 (7.5)	99	113.3	130/200	7	2 x 175U0990

12.2.8.7 Order Numbers for Brake Resistors, T6, Horizontal Braking 10% Duty Cycle

Table 138: Order Numbers for Brake Resistors, T6, Horizontal Braking 10% Duty Cycle

FC 102				Horizontal braking 10% duty cycle							
Drive data				Brake resistor data						Installation	
						Danfoss part numbers					
Mains type	**P_m [kW]**	**R_{min} [Ω]**	**$R_{br.nom}$ [Ω]**	**R_{rec} [Ω]**	**$P_{br.cont}$ [kW]**	**Wire IP54**	**Screw terminal IP65**	**Screw terminal IP20**	**Bolt connection IP20**	**Cable cross-section [mm^2 (AWG)]**	**Thermo relay [A]**
T6	1.1 (1.5)	620	889.1	850	0.100	175U3001	–	–	–	1.5 (16)	0.4

FC 102				Horizontal braking 10% duty cycle							
T6	1.5 (2.0)	550	642.7	570	0.100	175U3003	–	–	–	1.5 (16)	0.4
T6	2.2 (3.0)	380	431.1	415	0.200	175U3005	–	–	–	1.5 (16)	0.7
T6	3.0 (4.0)	260	312.5	270	0.200	175U3007	–	–	–	1.5 (16)	0.8
T6	4.0 (5.0)	189	231.6	200	0.300	175U3342	–	–	–	1.5 (16)	1.1
T6	5.5 (7.5)	135	166.6	145	0.450	175U3343	175U3012	175U3013	–	1.5 (16)	1.7
T6	7.5 (10)	99	121.1	100	0.570	175U3344	175U3136	175U3137	–	1.5 (16)	2.3
T6	11 (15)	69	81.6	72	0.680	175U3345	175U3456	175U3455	–	1.5 (16)	2.9
T6	15 (20)	48.6	59.4	52	1.130	175U3346	175U3458	175U3457	–	1.5 (16)	4.4
T6	18.5 (25)	35.1	47.9	38	1.400	175U3347	175U3460	175U3459	–	1.5 (16)	5.7
T6	22 (30)	27	40.1	31	1.700	175U3348	175U3037	175U3038	–	1.5 (16)	7.0
T6	30 (40)	22.5	29.2	27	2.200	175U3349	175U3043	175U3044	–	1.5 (16)	8.5
T6	37 (50)	17.1	23.6	19	2.800	175U3350	175U3462	175U3461	–	2.5 (14)	11.4
T6	45 (60)	13.5	19.4	14	3.200	175U3358	175U3464	175U3463	–	2.5 (14)	14.2
T6	55 (75)	11.7	15.8	13.5	4.200	–	175U3057	175U3058	–	4 (12)	17
T6	75 (100)	9.9	11.5	11	5.500	–	175U3063	175U3064	–	6 (10)	21
T6	90 (125)	8.6	9.6	7.0	7.000	–	–	–	175U3245	10 (8)	32

12.2.8.8 Order Numbers for Brake Resistors, T6, Vertical Braking 40% Duty Cycle

Table 139: Order Numbers for Brake Resistors, T6, Vertical Braking 40% Duty Cycle

FC 102				Horizontal braking 10% duty cycle							
Drive data				Brake resistor data						Installation	
						Danfoss part numbers					
Mains type	P_m [kW]	R_{min} [Ω]	$R_{br.nom}$ [Ω]	R_{rec} [Ω]	$P_{br.cont}$ [kW]	Wire IP54	Screw terminal IP65	Screw terminal IP20	Bolt connection IP20	Cable cross-section	Thermo relay [A]

FC 102				Horizontal braking 10% duty cycle							
										[mm² (AWG)]	
T6	1.1 (1.5)	620	889.1	850	0.280	175U3317	175U3104	175U3105	–	1.5 (16)	0.6
T6	1.5 (2.0)	550	642.7	570	0.450	175U3318	175U3430	175U3429	–	1.5 (16)	0.9
T6	2.2 (3.0)	380	431.1	415	0.570	175U3319	175U3432	175U3431	–	1.5 (16)	1.1
T6	3.0 (4.0)	260	312.5	270	0.960	175U3320	175U3434	175U3433	–	1.5 (16)	1.8
T6	4.0 (5.0)	189	231.6	200	1.130	175U3321	175U3436	175U3435	–	1.5 (16)	2.3
T6	5.5 (7.5)	135	166.6	145	1.700	175U3322	175U3126	175U3127	–	1.5 (16)	3.3
T6	7.5 (10)	99	121.1	100	2.200	175U3323	175U3138	175U3437	–	1.5 (16)	4.4
T6	11 (15)	69	81.6	72	3.200	175U3324	175U3440	175U3439	–	1.5 (16)	6.3
T6	15 (20)	48.6	59.4	52	5.500	–	175U3148	175U3149	–	1.5 (16)	9.7
T6	18.5 (25)	35.1	47.9	38	6.000	–	–	–	175U3239	2.5 (14)	12.6
T6	22 (30)	27	40.1	31	8.000	–	–	–	175U3240	4 (12)	16
T6	30 (40)	22.5	29.2	27	10.000	–	–	–	175U3200	4 (12)	19
T6	37 (50)	17.1	23.6	19	14.000	–	–	–	175U3204	10 (8)	27
T6	45 (60)	13.5	19.4	14	17.000	–	–	–	175U3207	10 (8)	35
T6	55 (75)	11.7	15.8	13.5	21.000	–	–	–	175U3208	16 (6)	40
T6	75 (100)	9.9	11.5	11	26.000	–	–	–	175U3211	25 (4)	49
T6	90 (125)	8.6	9.6	7.0	30.000	–	–	–	175U3241	35 (2)	66

12.2.8.9 Order Numbers for Brake Resistors, T7, Horizontal Braking 10% Duty Cycle

Table 140: Order Numbers for Brake Resistors, T7, Horizontal Braking 10% Duty Cycle

FC 102				Horizontal braking 10% duty cycle				
Drive data				Brake resistor data			Installation	
						Danfoss part numbers		

FC 102				Horizontal braking 10% duty cycle							
Mains type	P_m [kW]	R_{min} [Ω]	$R_{br.nom}$ [Ω]	R_{rec} [Ω]	$P_{br.cont}$ [kW]	Wire IP54	Screw terminal IP65	Screw terminal IP20	Bolt connection IP20	Cable cross-section [mm^2 (AWG)]	Thermo relay [A]
T7	1.1 (1.5)	620	830	630	0.100	175U3002	–	–	–	1.5 (16)	0.4
T7	1.5 (2.0)	513	600	570	0.100	175U3003	–	–	–	1.5 (16)	0.4
T7	2.2 (3.0)	340	403	415	0.200	175U3005	–	–	–	1.5 (16)	0.7
T7	3.0 (4.0)	243	292	270	0.300	175U3361	–	–	–	1.5 (16)	1.0
T7	4.0 (5.0)	180	216	200	0.360	–	175U3009	175U3010	–	1.5 (16)	1.3
T7	5.5 (7.5)	130	156	145	0.450	–	175U3012	175U3013	–	1.5 (16)	1.7
T7	7.5 (10)	94	113	105	0.790	–	175U3481	175U3482	–	1.5 (16)	2.6
T7	11 (15)	94.5	110.9	105	0.790	175U3360	175U3481	175U3482	–	1.5 (16)	2.7
T7	15 (20)	69.7	80.7	72	1.130	175U3351	175U3466	175U3465	–	1.5 (16)	3.8
T7	18.5 (25)	46.8	65.1	52	1.400	175U3352	175U3468	175U3467	–	1.5 (16)	4.9
T7	22 (30)	36	54.5	42	1.700	175U3353	175U3032	175U3033	–	1.5 (16)	6.0
T7	30 (40)	29	39.7	31	2.200	175U3354	175U3470	175U3469	–	1.5 (16)	7.9
T7	37 (50)	22.5	32.1	27	2.800	175U3355	175U3472	175U3471	–	2.5 (14)	9.6
T7	45 (60)	18	26.3	22	3.200	175U3356	175U3479	175U3480	–	2.5 (14)	11.3
T7	55 (75)	13.5	21.4	15.5	4.200	–	175U3474	175U3473	–	4 (12)	15.4
T7	75 (100)	13.5	15.6	13.5	5.500	–	175U3476	175U3475	–	6 (10)	19
T7	90 (125)	8.8	13	11	7.000	–	–	–	175U3232	10 (8)	25
T7	110 (150)	8.8	10.6	9.1	9.000	–	–	–	175U3067	16 (6)	32
T7	132 (175)	6.6	8.8	7.4	11.000	–	–	–	175U3072	16 (6)	39
T7	160 (250)	4.2	7.2	6.1	13.000	–	–	–	175U3075	16 (6)	46
T7	200 (300)	4.2	5.8	5.0	16.000	–	–	–	175U3078	25 (4)	57
T7	250 (350)	3.4	4.6	4.0	20.000	–	–	–	175U3082	35 (2)	71

FC 102				Horizontal braking 10% duty cycle							
T7	315 (450)	2.3	3.7	3.2	26.000	–	–	–	175U3085	50 (1-1/0)	90
T7	400 (550)	2.3	2.9	2.5	32.000	–	–	–	175U3089	70 (2/0)	113
T7	450 (600)	2.0	2.6	2.3	36.000	–	–	–	175U3090	2 x 35 (2 x 2)	125
T7	500 (650)	1.9	2.3	2.0	42.000	–	–	–	175U3092	2 x 35 (2 x 2)	145
T7	560 (750)	1.5	2.1	1.6	52.000	–	–	–	175U3094	2 x 50 (2 x 1-1/0)	180
T7	630 (850)	1.4	1.8	1.4	60.000	–	–	–	175U3095	2 x 50 (2 x 1-1/0)	207
T7	710 (950)	1.2	1.6	2 x 2.6	–	–	–	–	–	–	–
T7	800 (1075)	1.1	1.4	2 x 2.2	–	–	–	–	–	–	–
T7	900 (1200)	1.0	1.3	3 x 2.0	–	–	–	–	–	–	–
T7	1000 (1350)	0.9	1.1	3 x 2.6	–						–
T7	1200 (1600)	0.8	1.0	3 x 2.4	–	–	–	–	–	–	–
T7	1400 (1875)	0.6	0.8	3 x 2.0	–	–	–	–	–	–	–

12.2.8.10 Order Numbers for Brake Resistors, T7, Vertical Braking 40% Duty Cycle

Table 141: Order Numbers for Brake Resistors, T7, Vertical Braking 40% Duty Cycle

FC 102				Vertical braking 40% duty cycle							
Drive data				Brake resistor data						Installation	
						Danfoss part numbers					
Mains type	P_m [kW]	R_{min} [Ω]	$R_{br.nom}$ [Ω]	R_{rec} [Ω]	$P_{br.cont}$ [kW]	Wire IP54	Screw terminal IP65	Screw terminal IP20	Bolt connection IP20	Cable cross-section [mm^2 (AWG)]	Thermo relay [A]
T7	1.1 (1.5)	620	830	630	0.360	–	175U3108	175U3109	–	1.5 (16)	0.8
T7	1.5 (2.0)	513	600	570	0.570	–	175U3110	175U3111	–	1.5 (16)	1.0
T7	2.2 (3.0)	340	403	415	0.790	–	175U3112	175U3113	–	1.5 (16)	1.3
T7	3.0 (4.0)	243	292	270	1.130	–	175U3118	175U3119	–	1.5 (16)	2.0
T7	4.0 (5.0)	180	216	200	1.700	–	175U3122	175U3123	–	1.5 (16)	2.8

FC 102				Vertical braking 40% duty cycle							
T7	5.5 (7.5)	130	156	145	2.200	–	175U3106	175U3107	–	1.5 (16)	3.7
T7	7.5 (10)	94	113	105	3.200	–	175U3132	175U3133	–	1.5 (16)	5.2
T7	11 (15)	94.5	110.9	105	4.200	–	175U3134	175U3135	–	1.5 (16)	6.0
T7	15 (20)	69.7	80.7	72	4.200	–	175U3142	175U3143	–	1.5 (16)	7.2
T7	18.5 (25)	46.8	65.1	52	6.000	–	–	–	175U3242	2.5 (14)	10.8
T7	22 (30)	36	54.5	42	8.000	–	–	–	175U3243	2.5 (14)	13.9
T7	30 (40)	29	39.7	31	10.000	–	–	–	175U3244	4 (12)	18
T7	37 (50)	22.5	32.1	27	14.000	–	–	–	175U3201	10 (8)	23
T7	45 (60)	18	26.3	22	17.000	–	–	–	175U3202	10 (8)	28
T7	55 (75)	13.5	21.4	15.5	21.000	–	–	–	175U3205	16 (6)	37
T7	75 (100)	13.5	15.6	13.5	26.000	–	–	–	175U3209	16 (6)	44
T7	90 (125)	8.8	13	11	36.000	–	–	–	175U3212	25 (4)	57
T7	110 (150)	8.8	10.6	9.1	42.000	–	–	–	175U3214	35 (2)	68
T7	132 (175)	6.6	8.8	7.4	52.000	–	–	–	175U3215	50 (1-1/0)	84
T7	160 (250)	4.2	7.2	6.1	60.000	–	–	–	175U3218	70 (2/0)	99
T7	200 (300)	4.2	5.8	5.0	78.000	–	–	–	175U3220	2 x 35 (2 x 2)	125
T7	250 (350)	3.4	4.6	4.0	90.000	–	–	–	175U3222	2 x 35 (2 x 2)	150
T7	315 (450)	2.3	3.7	3.2	–	–	–	–	–	–	–
T7	400 (550)	2.3	2.9	2.5	–	–	–	–	–	–	–
T7	450 (600)	2.0	2.6	2.3	–	–	–	–	–	–	–
T7	500 (650)	1.9	2.3	2.0	–	–	–	–	–	–	–
T7	560 (750)	1.5	2.1	1.6	–	–	–	–	–	–	–
T7	630 (850)	1.4	1.8	1.4	–	–	–	–	–	–	–
T7	710 (950)	1.2	1.6	2 x 2.6	–	–	–	–	–	–	–
T7	800 (1075)	1.1	1.4	2 x 2.2	–	–	–	–	–	–	–

FC 102				Vertical braking 40% duty cycle							
T7	900 (1200)	1.0	1.3	2 x 2.0	–	–	–	–			
T7	1000 (1350)	0.9	1.1	3 x 2.6	–	–	–	–	–	–	–
T7	1200 (1600)	0.8	1.0	3 x 2.4	–	–	–	–	–	–	–
T7	1400 (1875)	0.6	0.8	3 x 2.0	–	–	–	–	–	–	–

12.2.9 Order Numbers for Accessory Bags

Table 142: Order Numbers for Accessory Bags

Accessory bag type	Description	Ordering number
Accessory bag A2/A3	Accessory bag, enclosure sizes A2/A3	130B1022
Accessory bag A4	Accessory bag for enclosure size A4 without thread	130B0536
Accessory bag A5	Accessory bag, enclosure size A5	130B1023
Accessory bag B1	Accessory bag, enclosure size B1	130B2060
Accessory bag B2	Accessory bag, enclosure size B2	130B2061
Accessory bag B3	Accessory bag, enclosure size B3	130B0980
Accessory bag B4	Accessory bag, enclosure size B4, 18.5–22 kW	130B1300
Accessory bag B4	Accessory bag, enclosure size B4, 30 kW	130B1301
Accessory bag C1	Accessory bag, enclosure size C1	130B0046
Accessory bag C2	Accessory bag, enclosure size C2	130B0047
Accessory bag C3	Accessory bag, enclosure size C3	130B0981
Accessory bag C4	Accessory bag, enclosure type C4, 55 kW	130B0982
Accessory bag C4	Accessory bag, enclosure type C4, 75 kW	130B0983

Example of an accessory bag content (130B0046)

- Loadshare warning label
- Eye bolt M10
- 2 relay plugs
- 3-pole spring cage connector
- 6-pole spring cage connector
- Label
- Terminal strap
- 3 cable clamps
- 4 metric screws M4 and M6
- 1 thread forming screw
- 3 cable bearers

12.2.10 Ordering of Harmonic Filters

Harmonic filters are used to reduce mains harmonics. Danfoss offers 2 different harmonic filters:

- VLT® Advanced Harmonic Filter AHF 005 with 5% current distortion.
- VLT® Advanced Harmonic Filter AHF 010 with 10% current distortion.

The filters are cooled by natural convection or with built-in fans. Secure sufficient airflow through the filter during installation to prevent overheating the filter. An airflow of minimum 2 m/s is required through the filter.

12.2.10.1 Order Numbers for Harmonic Filters, 380–415 V, 50 Hz

Table 143: Ordering Numbers for Harmonic Filters, 380–415 V, 50 Hz

Drive values		AHF values				
Power rating [kW][1]	Input current 380–440 V [A]	Current rating [A]	Ordering numbers[2]		Enclosure type	
			AHF 005 IP20	AHF 010 IP20	AHF 005 IP20	AHF 010 IP20
0.37	1.2	10	130B1229	130B1027	X1-V3 IP20 if	X1-V3 IP20 if
0.55	1.6					
0.75	2.2					
1.1	2.7					
1.5	3.7					
2.2	5.0					
3.0	6.5					
4.0	9.0					
5.5	11.7	14	130B1231	130B1058	X1-V3 IP20 ef	X1-V3 IP20 ef
7.5	14.4					
11	22	22	130B1232	130B1059	X2-V3 IP20 ef	X2-V3 IP20 if
15	29	29	130B1233	130B1089	X2-V3 IP20 ef	X2-V3 IP20 if
18.5	34	34	130B1238	130B1094	X3-V3 IP20 if	X3-V3 IP20 if
22	40	40	130B1239	130B1111	X3-V3 IP20 if	X3-V3 IP20 if
30	55	55	130B1240	130B1176	X3-V3 IP20 if	X3-V3 IP20 if
37	66	66	130B1241	130B1180	X4-V3 IP20 if	X4-V3 IP20 if
45	82	82	130B1247	130B1201	X4-V3 IP20 ef	X4-V3 IP20 ef
55	96	96	130B1248	130B1204	X5-V3 IP20 ef	X5-V3 IP20 ef
75	133	133	130B1249	130B1207	X5-V3 IP20 ef	X5-V3 IP20 ef
90	171	171	130B1250	130B1213	X6-V3 IP20 ef	X6-V3 IP20 if
110	204	204	130B1251	130B1214	X6-V3 IP20 ef	X6-V3 IP20 if
132	251	251	130B1258	130B1215	X7-V3 IP20 if	X7-V3 IP20 if
160	304	304	130B1259	130B1216	X7-V3 IP20 if	X7-V3 IP20 if

Drive values		AHF values				
–	–	325	130B3152[3]	130B3136[3]	X8-V3 IP20 if	X7-V3 IP20 if
200	381	381	130B1260	130B1217	X8-V3 IP20 ef	X7-V3 IP20 if
250	463	480	130B1261	130B1228	X8-V3 IP20 ef	X8-V3 IP20 ef
315	590	608	2 x 130B1259	2 x 130B1216	See individual filters	
355	647	650	2 x 130B3152	2 x 130B3136		
400	684	685	130B1259 + 130B1260	130B1216 + 130B1217		
450	779	762	2 x 130B1260	2 x 130B1217		
500	857	861	130B1260 + 130B1261	130B1217 + 130B1228		
560	964	960	2 x 130B1261	2 x 130B1228		
630	1090	1140	3 x 130B1260	3 x 130B1217		
710	1227	1240	2 x 130B1260 + 130B1261	2 x 130B1217 + 130B1228		
800	1422	1440	3 x 130B1261	3 x 130B1228		
1000	1675	1720	2 x 130B1260 + 2 x 130B1261	2 x 130B1217 + 2 x 130B1228		

[1] The power rating in the selection table is the actual operating power and not necessarily the type code power rating. Changing operating conditions between HO and NO changes the actual operating conditions and the filter selection must reflect actual operating conditions.

[2] The fan control system allows extended input voltage range as 200–415 V. The AHFs for 380–415 V/50 Hz mains operation can be operated with 200–240 V mains supply.

[3] Filters are used as paralleling for 355 kW drive.

12.2.10.2 Order Numbers for Harmonic Filters, 380–415 V, 60 Hz

Table 144: Ordering Numbers for Harmonic Filters, 380–415 V, 60 Hz

Drive values		AHF values				
Power rating [kW][1]	Input current 380-440V [A]	Current rating [A]	Ordering numbers[2]		Enclosure type	
			AHF 005 IP20	AHF 010 IP20	AHF 005 IP20	AHF 010 IP20
0.37	1.2	10	130B2857	130B2262	X1-V3 IP20 if	X1-V3 IP20 if
0.55	1.6					
0.75	2.2					
1.1	2.7					
1.5	3.7					
2.2	5.0					
3.0	6.5					
4.0	9.0					
5.5	11.7	14	130B2858	130B2265	X1-V3 IP20 ef	X1-V3 IP20 ef

Drive values		AHF values				
7.5	14.4					
11	22	22	130B2859	130B2268	X2-V3 IP20 ef	X2-V3 IP20 if
15	29	29	130B2860	130B2294	X2-V3 IP20 ef	X2-V3 IP20 if
18.5	34	34	130B2861	130B2297	X3-V3 IP20 if	X3-V3 IP20 if
22	40	40	130B2862	130B2303	X3-V3 IP20 if	X3-V3 IP20 if
30	55	55	130B2863	130B2445	X3-V3 IP20 if	X3-V3 IP20 if
37	66	66	130B2864	130B2459	X4-V3 IP20 if	X4-V3 IP20 if
45	82	82	130B2865	130B2488	X4-V3 IP20 ef	X4-V3 IP20 ef
55	96	96	130B2866	130B2489	X5-V3 IP20 ef	X5-V3 IP20 ef
75	133	133	130B2867	130B2498	X5-V3 IP20 ef	X5-V3 IP20 ef
90	171	171	130B2868	130B2499	X6-V3 IP20 ef	X6-V3 IP20 if
110	204	204	130B2869	130B2500	X6-V3 IP20 ef	X6-V3 IP20 if
132	251	251	130B2870	130B2700	X7-V3 IP20 if	X7-V3 IP20 if
160	304	304	130B2871	130B2819	X8-V3 IP20 if	X7-V3 IP20 if
–	–	325	130B3156[3]	130B3154[3]	X8-V3 IP20 ef	X7-V3 IP20 ef
200	381	381	130B2872	130B2855	X8-V3 IP20 ef	X7-V3 IP20 ef
250	463	480	130B2873	130B2856	X8-V3 IP20 ef	X8-V3 IP20 ef
315	590	608	2 x 130B2871	2 x 130B2819	See individual filters	
355	647	650	2 x 130B3156	2 x 130B3154		
400	684	685	130B2871 + 130B2872	130B2819 + 130B2855		
450	779	762	2 x 130B2872	2 x 130B2855		
500	857	861	130B2872 + 130B2873	130B2855 + 130B2856		
560	964	960	2 x 130B2873	2 x 130B2856		
630	1090	1140	3 x 130B2872	3 x 130B2855		
710	1227	1240	2 x 130B2872 + 130B2873	2 x 130B2855 + 130B2856		
800	1422	1440	3 x 130B2873	3 x 130B2856		
1000	1675	1720	2 x 130B2872 + 2 x 130B2873	2 x 130B2855 + 2 x 130B2856		

[1] The power ratings in selection table are the actual operating power and not necessarily the type code power rating. Changing operating conditions between HO and NO changes the actual operating conditions and the filter selection must reflect actual operating conditions.

[2] The fan control system allows extended input voltage range as 200–415 V. The AHFs for 380–415 V/60 Hz mains operation can be operated with 200–240 V mains supply.

[3] Filters are used as paralleling for 355 kW drive.

12.2.10.3 Order Numbers for Harmonic Filters, 440–480 V, 60 Hz

Table 145: Ordering Numbers for Harmonic Filters, 440–480 V, 60 Hz

Drive values			AHF values					
Power rating		Input current 441-500V [A]	Current rating [A]		Ordering numbers		Enclosure type	
[kW][1]	[HP][2]		AHF 005	AHF 010	AHF 005 IP20	AHF 010 IP20	AHF 005 IP20	AHF 010 IP20
0.37	0.50	1.0	10	10	130B1752	130B1482	X1-V3 IP20 if	X1-V3 IP20 if
0.55	0.75	1.4						
0.75	1.0	1.9						
1.1	1.5	2.7						
1.5	2.0	3.1						
2.2	3.0	4.3						
3.0	4.0	5.7						
4.0	5.5	7.4						
5.5	7.5	9.9	14	14	130B1753	130B1483	X1-V3 IP20 ef	X1-V3 IP20 ef
7.5	10	13						
11	15	19	19	19	130B1754	130B1484	X2-V3 IP20 ef	X2-V3 IP20 if
15	20	25	25	25	130B1755	130B1485	X2-V3 IP20 ef	X2-V3 IP20 if
18.5	25	31	31	31	130B1756	130B1486	X3-V3 IP20 if	X3-V3 IP20 if
22	30	36	36	36	130B1757	130B1487	X3-V3 IP20 if	X3-V3 IP20 if
30	40	47	48	48	130B1758	130B1488	X3-V3 IP20 if	X3-V3 IP20 if
37	50	59	60	60	130B1759	130B1491	X4-V3 IP20 if	X4-V3 IP20 if
45	60	73	73	73	130B1760	130B1492	X4-V3 IP20 ef	X4-V3 IP20 ef
55	75	95	95	95	130B1761	130B1493	X5-V3 IP20 ef	X5-V3 IP20 ef
75	100	118	118	118	130B1762	130B1494	X5-V3 IP20 ef	X5-V3 IP20 ef
90	125	154	154	154	130B1763	130B1495	X6-V3 IP20 ef	X6-V3 IP20 if
110	150	183	183	183	130B1764	130B1496	X6-V3 IP20 ef	X6-V3 IP20 if
132	200	231	231	231	130B1765	130B1497	X7-V3 IP20 if	X7-V3 IP20 if
160	250	291	291	291	130B1766	130B1498	X8-V3 IP20 if	X7-V3 IP20 if
200	300	348	355	355	130B1768	130B1499	X8-V3 IP20 ef	X7-V3 IP20 ef
–	–	–	380	380	130B3167[3]	130B3165[3]	X8-V3 IP20 ef	X7-V3 IP20 ef
250	350	427	436	436	130B1769	130B1751	X8-V3 IP20 ef	X8-V3 IP20 ef
315	450	531	522	522	130B1765 + 130B1766	130B1497 + 130B1498	See individual filters	
355	500	580	582	582	2 x 130B1766	2 x 130B1498		

Drive values			AHF values				
400	550	667	671	671	130B1766 + 130B3167	130B1498 + 130B3165	
450	600	771	710	710	2 x 130B1768	2 x 130B1499	
500	650	759	760	760	2 x 130B3167	2 x 130B3165	
560	750	867	872	872	2 x 130B1769	2 x 130B1751	
630	900	1022	1065	1065	3 x 130B1768	3 x 130B1499	
710	1000	1129	1140	1140	3 x 130B3167	3 x 130B3165	
800	1200	1344	1308	1308	3 x 130B1769	3 x 130B1751	
1000	1350	1490	1582	1582	2 x 130B1768 + 2 x 130B1769	2 x 130B1499 + 2 x 130B1751	

[1] The power ratings in selection table are the actual operating power and not necessarily the type code power rating. Changing operating conditions between HO and NO changes the actual operating conditions and the filter selection must reflect actual operating conditions.

[2] Typical HP shaft output at 460 V.

[3] Filters are used as paralleling for 500 kW and 710 kW.

12.2.10.4 Order Numbers for Harmonic Filters, 600 V, 60 Hz

Table 146: Ordering Numbers for Harmonic Filters, 600 V, 60 Hz

Drive values					AHF values					
Power rating			Input current [A]		Current rating at 600 V		Ordering numbers		Enclosure type	
[kW][1]	T6 [HP][2]	T7 [HP][2]	T6 551–600 V	T7 551–600 V	AHF 005 [A]	AHF 010 [A]	AHF 005 IP20	AHF 010 IP20	AHF 005 IP20	AHF 010 IP20
11	15	10	16	15	15	15	130B5246	130B5212	X3-V3 IP20 if	X3-V3 IP20 if
15	20	15	20	19,5	20	20	130B5247	130B5213	X3-V3 IP20 if	X3-V3 IP20 if
18,5	25	20	24	24	24	24	130B5248	130B5214	X3-V3 IP20 ef	X3-V3 IP20 ef
22	30	25	31	29	29	29	130B5249	130B5215	X4-V3 IP20 ef	X4-V3 IP20 ef
30	40	30	37	36	36	36	130B5250	130B5216	X4-V3 IP20 ef	X4-V3 IP20 ef
37	50	40	47	49	50	50	130B5251	130B5217	X5-V3 IP20 ef	X5-V3 IP20 ef
45	60	50	56	59	58	58	130B5252	130B5218	X5-V3 IP20 ef	X5-V3 IP20 ef
55	75	60	75	74	77	77	130B5253	130B5219	X6-V3 IP20 ef	X6-V3 IP20 ef
75	100	75	91	85	87	87	130B5254	130B5220	X6-V3 IP20 ef	X6-V3 IP20 ef

Drive values					AHF values					
90	125	100	119	106	109	109	130B5255	130B5221	X6-V3 IP20 ef	X6-V3 IP20 ef
110	–	125	–	124	128	128	130B5256	130B5222	X6-V3 IP20 ef	X6-V3 IP20 ef
132	–	150	–	151	155	155	130B5257	130B5223	X7-V3 IP20 ef	X7-V3 IP20 ef
160	–	200	–	189	197	197	130B5258	130B5224	X7-V3 IP20 ef	X7-V3 IP20 ef
200	–	250	–	234	240	240	130B5259	130B5225	X8-V3 IP20 ef	X7-V3 IP20 ef
250	–	300	–	286	296	296	130B5260	130B5226	X8-V3 IP20 ef	X8-V3 IP20 ef
315	–	350	–	339	394	366	2 x 130B5258	130B5227		X8-V3 IP20 ef
355	–	400	–	366	394	366	2 x 130B5258	130B5227		X8-V3 IP20 ef
400	–	400	–	395	394	395	2 x 130B5258	130B5228		X8-V3 IP20 ef
500	–	500	–	482	480	480	2 x 130B5259	2 x 130B5225	See individual filters	
560	–	550	–	549	592	592	2 x 130B5260	2 x 130B5226		
630	–	650	–	613	720	732	3 x 130B5259	2 x 130B5227		
710	–	750	–	711	720	732	3 x 130B5259	2 x 130B5227		
800	–	950	–	828	888	888	3 x 130B5260	3 x 139B5226		
900	–	1050	–	920	960	960	4 x 130B5259	3 x 130B5227		
1000	–	1150	–	1032	1184	1098	4 x 130B5260	3 x 130B5227		

[1] The power ratings in selection table are the actual operating power and not necessarily the type code power rating. Changing operating conditions between HO and NO changes the actual operating conditions and the filter selection must reflect actual operating conditions.

[2] Typical HP shaft output at 575 V.

12.2.10.5 Order Numbers for Harmonic Filters, 500–690 V, 50 Hz

Table 147: Ordering Numbers for Harmonic Filters, 500–690 V, 50 Hz

Drive values				AHF values					
Power rating [kW][1]	Input current [A]			Current rating at 690 V		Ordering numbers		Enclosure type	
	T6 525–550 V	T7 525–550 V	T7 690 V	AHF 005 [A]	AHF 010 [A]	AHF 005 IP20	AHF 010 IP20	AHF 005 IP20	AHF 010 IP20
11	17.2	15.0	14.5	15	15	130B5088	130B5280	X3-V3 IP20 if	X3-V3 IP20 if
15	20.9	19.5	19.5	20	20	130B5089	130B5281	X3-V3 IP20 if	X3-V3 IP20 if
18.5	25.4	24	24	24	24	130B5090	130B5282	X3-V3 IP20 ef	X3-V3 IP20 ef
22	32.7	29	29	29	29	130B5092	130B5283	X4-V3 IP20 ef	X4-V3 IP20 ef
30	39	36	36	36	36	130B5125	130B5284	X4-V3 IP20 ef	X4-V3 IP20 ef
37	49	49	48	50	50	130B5144	130B5285	X5-V3 IP20 ef	X5-V3 IP20 ef
45	59	59	58	58	58	130B5168	130B5286	X5-V3 IP20 ef	X5-V3 IP20 ef
55	78.9	77	77	77	77	130B5169	130B5287	X6-V3 IP20 ef	X6-V3 IP20 ef
75	95.3	89	87	87	87	130B5170	130B5288	X6-V3 IP20 ef	X6-V3 IP20 ef
90	124.3	110	109	109	109	130B5172	130B5289	X6-V3 IP20 ef	X6-V3 IP20 ef
110	–	130	128	128	128	130B5195	130B5290	X6-V3 IP20 ef	X6-V3 IP20 ef
132	–	158	155	155	155	130B5196	130B5291	X7-V3 IP20 ef	X7-V3 IP20 ef
160	–	198	197	197	197	130B5197	130B5292	X7-V3 IP20 ef	X7-V3 IP20 ef
200	–	245	240	240	240	130B5198	130B5293	X8-V3 IP20 ef	X7-V3 IP20 ef
250	–	299	296	296	296	130B5199	130B5294	X8-V3 IP20 ef	X8-V3 IP20 ef
315	–	355	352	394	366	2 x 130B5197	130B5295		X8-V3 IP20 ef
355	–	381	366	394	395	2 x 130B5197	130B5296		X8-V3 IP20 ef
400	–	413	400	437	437	130B5197 + 130B5198	130B5292 + 130B5293	See individual filters	
500	–	504	482	536	536	130B5198 + 130B5199	130B5293 + 130B5294		
560	–	574	549	592	592	2 x 130B5199	2 x 130B5294		
630	–	642	613	662	662	130B5199 + 2 x 130B5197	130B5294 + 130B5295		

Drive values				AHF values				
710	–	743	711	788	732	4 x 130B5197	2 x 130B5295	
800	–	866	828	888	888	3 x 130B5199	3 x 130B5294	
900	–	962	920	986	958	2 x 130B5199 + 2 x 130B5197	2 x 130B5294 + 130B5295	

[1] The power ratings in selection table are the actual operating power and not necessarily the type code power rating. Changing operating conditions between HO and NO changes the actual operating conditions and the filter selection must reflect actual operating conditions.

12.2.11 Order Numbers for VLT® Sine-wave Filters MCC 101

Table 148: Ordering Numbers for Sine-wave Filters for 200–500 V Drives

Drive power and current ratings						Filter current rating			Switching frequency	Ordering numbers	
200–240 V		380–400 V		441–500 V		50 Hz	60 Hz	100 Hz		IP00	IP20/23[1]
[kW]	[A]	[kW]	[A]	[kW]	[A]	[A]	[A]	[A]	[kHz]		
–	–	0.37	1.3	0.37	1.1	2.5	2.5	2.0	5.0	130B2404	130B2439
0.25	1.8	0.55	1.8	0.55	1.6						
0.37	2.4	0.75	2.4	0.75	2.1						
–	–	1.1	3.0	1.1	3.0	4.5	4.0	3.5	5.0	130B2406	130B2441
0.55	3.5	1.5	4.1	1.5	3.4						
0.75	4.6	2.2	5.6	2.2	4.8	8.0	7.5	5.5	5.0	130B2408	130B2443
1.1	6.6	3.0	7.2	3.0	6.3						
1.5	7.5	–	–	–	–						
–	–	4.0	10	4.0	8.2	10	9.5	7.5	5.0	130B2409	130B2444
2.2	10.6	5.5	13	5.5	11	17	16	13	5.0	130B2411	130B2446
3.0	12.5	7.5	16	7.5	14.5						
3.7	16.7	–	–	–	–						
5.5	24.2	11	24	11	21	24	23	18	4.0	130B2412	130B2447
7.5	30.8	15	32	15	27	38	36	28.5	4.0	130B2413	130B2448
		18.5	37.5	18.5	34						
11	46.2	22	44	22	40	48	45.5	36	4.0	130B2281	130B2307
15	59.4	30	61	30	52	62	59	46.5	3.0	130B2282	130B2308
18.5	74.8	37	73	37	65	75	71	56	3.0	130B2283	130B2309
22	88	45	90	55	80	115	109	86	3.0	130B3179	130B3181*

Drive power and current ratings						Filter current rating			Switching frequency	Ordering numbers	
30	115	55	106	75	105						
37	143	75	147	90	130	180	170	135	3.0	130B3182	130B3183*
45	170	90	177								

[1] Ordering numbers marked with * are IP23.

Table 149: Ordering Numbers for Sine-wave Filters for 525–690 V Drives

Drive Power and Current Ratings						Filter current rating			Switching frequency	Ordering numbers	
525–600 V		690 V		525–550 V		50 Hz	60 Hz	100 Hz		IP00	IP20/23[1]
[kW]	[A]	[kW]	[A]	[kW]	[A]	[A]	[A]	[A]	[kHz]		
0.75	1.7	1.1	1.6	–	–	4.5	4.0	3.0	4.0	130B7335	130B7356
1.1	2.4	1.5	2.2								
1.5	2.7	2.2	3.2								
2.2	3.9	3.0	4.5								
3.0	4.9	4.0	5.5	–	–	10	9.0	7.0	4.0	130B7289	130B7324
4.0	6.1	5.5	7.5								
5.5	9.0	7.5	10								
7.5	11	11	13	7.5	14	13	12	9.0	3.0	130B3195	130B3196
11	18	15	18	11	19	28	26	21	3.0	130B4112	130B4113
15	22	18.5	22	15	23						
18.5	27	22	27	18	28						
22	34	30	34	22	36	45	42	33	3.0	130B4114	130B34115
30	41	37	41	30	48						
37	52	45	52	37	54	76	72	57	3.0	130B4116	130B4117*
45	62	55	62	45	65						
55	83	75	83	55	87	115	109	86	3.0	130B4118	130B4119*
75	100	90	100	75	105						
90	131	–	–	90	137	165	156	124	2.0	130B4121	130B4124*

[1] Ordering numbers marked with * are IP23.

12.2.12 Order Numbers for VLT® dU/dt Filters MCC 102

Table 150: Ordering Numbers for dU/dt Filters for 200–500 V Drives

Drive ratings [V]						Filter current rating [V]		Order number		
200–240		380–440		441–500		380@60 Hz, 200–400/440@50 Hz	460/480@60 Hz, 500/525@50 Hz	IP00	IP20	IP54
[kW]	[A]	[kW]	[A]	[kW]	[A]	[A]	[A]			
3.0	12.5	5.5	13	5.5	11	17	15	N/A	130B7367[1]	N/A
3.7	16	7.5	16	7.5	14.5					
–	–	–	–	–	–					
5.5	24.2	11	24	11	21	44	40	130B2835	130B2836	130B2837
7.5	30.8	15	32	15	27					
–	–	18.5	37.5	18.5	34					
–	–	22	44	22	40					
11	46.2	30	61	30	52	90	80	130B2838	130B2839	130B2840
15	59.4	37	73	37	65					
18.5	74.8	45	90	55	80					
22	88	–	–	–	–					
–	–	55	106	75	105	106	105	130B2841	130B2842	130B2843
–	–	55	106	75	105					
30	115	75	147	90	130	177	160	130B2844	130B2845	130B2846
37	143	90	177	–	–					
45	170	–	–	–	–					

[1] Dedicated A3 enclosures supporting footprint mounting and book style mounting. Fixed shielded cable connection to the drive.

Table 151: Ordering Numbers for dU/dt Filters for 525–690 V Drives

Drive ratings [V]				Filter current rating [V]			Order number		
525–550		551–690		460/480@60 Hz, 500/525@50 Hz	575/600@60 Hz	690@50 Hz	IP00	IP20	IP54
[kW]	[A]	[kW]	[A]	[A]	[A]	[A]			
5.5	9.5	1.1	1.6	15	13	10	N/A	130B7367[1]	N/A
7.5	11.5	1.5	2.2						
–	–	2.2	3.2						
		3.0	4.5						
		4.0	5.5						
		5.5	7.5						

Drive ratings [V]				Filter current rating [V]			Order number		
		7.5	10						
7.5	14	11	13	40	32	27	130B2835	130B2836	130B2837
11	19	15	18						
15	23	18.5	22						
18.5	28	22	27						
30	43	30	34	80	58	54	130B2838	130B2839	130B2840
37	54	37	41						
45	65	45	52						
–	–	–	–						
55	87	55	62	105	94	86	130B2841	130B2842	130B2843
55	87	75	83						
75	113	90	108	160	131	108	130B2844	130B2845	130B2846
90	137	–	–						
–	–	–	–						

[1] Dedicated A3 enclosures supporting footprint mounting and book style mounting. Fixed shielded cable connection to the drive.

12.2.13 Spare Parts

Visit the VLT® Shop or the configurator for ordering spare parts available for a specific application on VLTshop.danfoss.com.

13 Appendix

13.1 Symbols and Abbreviations

60° AVM	Pulse width modulation
°C	Degrees Celsius
°F	Degrees Fahrenheit
AC	Alternating current
AEO	Automatic energy optimization
AWG	American wire gauge
AMA	Automatic motor adaptation
BDM	Basic drive module
CBM	Condition-based monitoring
CDM	Complete drive module
DC	Direct current
EMC	Electro-magnetic compatibility
ETR	Electronic thermal relay
$f_{M,N}$	Nominal motor frequency
I_{INV}	Rated inverter output current
I_{LIM}	Current limit
$I_{M,N}$	Nominal motor current
$I_{VLT,MAX}$	Maximum output current
$I_{VLT,N}$	Rated output current supplied by the drive
IMC	Integrated motion controller
IP	Ingress protection
LCP	Local control panel
MCT	Motion control tool
n_s	Synchronous motor speed
$P_{M,N}$	Nominal motor power
PDS	Power drive system
PELV	Protective extra low voltage
PCB	Printed circuit board
PM motor	Permanent magnet motor
PWM	Pulse width modulation
RPM	Revolutions per minute

Regen	Regenerative terminals
SFAVM	Stator frequency asynchron vector modulation
T_{LIM}	Torque limit
TAS	Temperature-adaptive switching frequency function
$U_{M,N}$	Nominal motor voltage

Index

+

+10 V DC output....60

2

24 V DC output....60

A

Abbreviations.... 186, 186
Acoustic noise in motor.... 14
Ambient conditions....57
Analog input.... 59, 95, 96
Analog output.... 60, 95, 96
Approvals.... 11
Approvals and certifications....13
ATEX....69
Automatic energy optimization (AEO).... 24
Automatic motor adaptation
    Wiring example.... 143
Automatic switching frequency modulation....31

B

Bearing current.... 15
Brake
    Control with brake function....112
    Overvoltage control (OVC).... 112

C

Cables
    Shielded control cables....93
    Twisted-pair cables....93
    Leakage current....113
Calculations
    THDi.... 130
    Short-circuit ratio....130
    Harmonic software....133
Capacitor storage....67
CDM....18
    See Complete Drive Module
CE mark.... 11
Certifications.... 11
Circuit breaker....97, 114
    See Residual current device
Commercial environment....123
Complete Drive Module....18
Conformal coating....67
Control card....60, 60, 60, 60
Control card performance....61
Control characteristics....61
Control structure closed loop....140
Control terminals....31
Current
    Minimizing bearing and shaft currents....109
    Leakage current....112
    Transient ground.... 114
    Fundamental current.... 129
    Harmonic current....129
    Distortion....130

D

Derating for low air pressure....72
Digital input....58, 95
Digital output.... 60, 95
Dimensions, enclosure size A....62
Dimensions, enclosure size B....64
Dimensions, enclosure sizes C and D....65
Directives....11, 13

E

Earth leakage circuit breaker.... 114
    See Residual current device
Efficiency....114
Efficiency class....15
Electromagnetic interference.... 31
Electronic thermal overvoltage.... 32, 107
EMC
    Directive....12
Emission requirements....123, 123
EN 60664-1....61
EN 61800-3....57
EN60664-1....56
Enclosure protection....13
Encoder input.... 59
Environment.... 57
ErP directive....12
Export control regulation.... 13
External alarm reset.... 152
External interlock.... 148

F

Fans
    Temperature-controlled fans....31
Fieldbus options....34
Fourier series analysis....129
Front cover tightening torque, enclosure size A.... 63
Front cover tightening torque, enclosure size B....64
Front cover tightening torque, enclosure sizes C and D....65
Fuse.... 97

G

Galvanic isolation.... 31
Gases....67
Ground
    Loops.... 93
    Leakage current....114
    Installation considerations.... 136
    Leakage current hazard....137

H

Harmonics
    IEC standards....131
    EN standards....131
    Calculation.... 133

I

IEC 60068-2-43.... 57
IEC 60364....97
IEC 721-3-3....57

IES....19
See International Efficiency for Systems
Immunity requirements....124
Installation
Qualified personnel....10
International Efficiency for Systems....19
IP rating....13
IP21/UL Type 1 Kit....35

L

Language packages....158
Leakage current....112
Line reactor....133
Low voltage directive....11

M

Mains
Fluctuations....31
Modulation....31
Moroccan conformity mark....13
Motor
Missing phase detection....25
Thermal protection....32,107
Motor output....56
Class protection....69
Minimizing bearing and shaft currents....109
Leakage current....113
Wiring thermistor....154
Motor insulation, protection of....14
Mounting brackets....40

N

NEC 2009....97
NEMA protection rating....13
Noise in motor cables....15

O

Open-loop speed control configurations....144
Options
Fieldbus....34
Functional extensions....34
Overload
Electronic thermal overvoltage....32,107
Issues with harmonics....129
Overvoltage
Limits....26
Alternative brake function....112

P

Panel mounting kit for LCP....43
PDS....18
See Power Drive Systems
PELV....31, 154
Periodic forming....67
PID
Controller....32
Point of common coupling....130, 130
Power Drive Systems....18
Power rating, enclosure size B....64
Power ratings, enclosure size A....62
Power ratings, enclosure sizes C and D....65
Programmable Controllers....35
Protection
Rating....13
Short circuit....24
Brake function....25
Overload....25,26
Motor thermal....32,107
Protection of motor insulation....14
Pulse
Automatic switching frequency modulation....31
Pulse input....59
Pulse start/stop wiring configuration....151
Purpose of the manual....9

Q

Qualified personnel....10

R

Radio equipment directive....12
Radio frequency interference....31
REACH directive....12
Reduce acoustic noise in motor....14
Reduce noise in motor cables....15
Reference
Limits....138
Relay
Terminals....31
Output....61
Remote mounting kits for LCP....41
Residential environment....123
Residual current device....112, 114, 114
Resonance damping....31
RoHS directive....12
Rotor....26, 26
RS485....60, 153
Run/stop command....149
Run/stop wiring configuration....148

S

Safe torque off
Machinery directive compliance....12
Overview....32
Wiring of....150
Serial communication....93, 95, 96
Service log
Overview....22
Alarms....23
Shaft voltage....15
Shielded control cable....93
Short circuit
Protection....24
Ratio....130
Ratio calculation....130
Speed PID....142
Speed reference....144
Standards
IEC 60034-30-1....15
IEC 60364....24
NEC 2017....24
Start/stop command....150
STO....58
Storage....67

Supply voltage....56, 95, 95
Switching frequency
Use with RCDs....114
Symbols....10, 186

T

Thermistor
Wiring configuration....154,154
Tightening torque....62
Torque characteristics....56
Transformer....130

U

UL
Enclosure protection rating....13
USB serial communication....60
Use of EMC-correct cables....83

V

Voltage distortion....130
VVC+....142

W

Weight, enclosure size A....62
Weight, enclosure size B....64
Weight, enclosure sizes C and D....65
Wireless LCP....44
Wiring configurations
Open loop....144
Start/stop....150
External alarm reset....152
Thermistor....154
Wiring schematic....81

VLT Drives Glossary

A

Actual position

The actual position from an encoder, or a value that the motor control calculates in open loop. The drive uses the actual position as feedback for position PI.

Analog reference

A signal transmitted to the analog inputs 53 or 54 (voltage or current).

Analog inputs

The analog inputs are used for controlling various functions of the drive.

There are 2 types of analog inputs:

Current input, 0–20 mA, and 4–20 mA

Voltage input, -10 V DC to +10 V DC.

Analog outputs

The analog outputs can supply a signal of 0–20 mA, 4–20 mA.

B

BDM

A BDM is a drive module which consists of a power converter module and a control and regulating device for speed, torque, current, or voltage.

Binary reference

A signal transmitted to the serial communication port.

Break-away torque

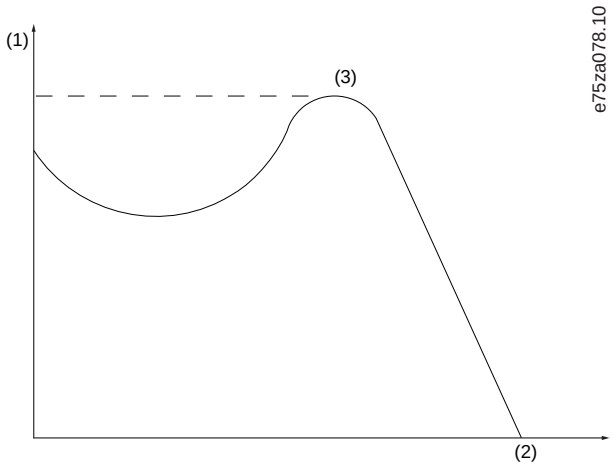

C

CBM

Condition Based Monitoring monitors the machine condition and performance when the drive is in service and detects mechanical, motor, or application failures in advance. Corrective actions can be performed before the process or application is impacted.

CDM

A CDM is a drive system without the motor and without the measuring sensors, which are mechanically connected to the motor shaft. The drive system consists of, but is not restricted to, the BDM and extensions, such as the feed module and auxiliary equipment.

CT characteristics

Constant-torque characteristics used for all applications such as conveyor belts, displacement pumps, and cranes.

Commanded position

The actual position reference calculated by the profile generator. The drive uses the commanded position as setpoint for position PI.

Control command

Functions are divided into 2 groups.

Functions in group 1 have higher priority than functions in group 2.

Table 1: Function Groups

Group 1	Group 2
Reset, coast stop, reset and coast stop, quick stop, DC brake, stop, the LCP [OFF] key.	Start, pulse start, reversing, start reversing, jog, freeze output.

D

DSP Digital signal processor.

Digital inputs The digital inputs can be used for controlling various functions of the drive.

Digital outputs The drive features 2 solid-state outputs that can supply a 24 V DC (maximum 40 mA) signal.

F

f_M Motor frequency.

$f_{M,N}$ Rated motor frequency (nameplate data).

f_{MAX} Maximum motor frequency.

f_{MIN} Minimum motor frequency.

f_{jog} Motor frequency when the jog function is activated (via digital terminals).

I

I_M Motor current (actual).

$I_{M,N}$ Rated motor current (nameplate data).

IMC Integrated Motion Controller (IMC) is a functionality that enables an AC drive to perform high-precision positioning and synchronization operations without the need for additional modules or hardware.

Intermittent duty cycle An intermittent duty rating refers to a sequence of duty cycles. Each cycle consists of an on-load and an off-load period. The operation can be either periodic duty or non-periodic duty.

L

LCP The local control panel is the keypad for controlling the drive.

lsb Least significant bit.

M

MCM Short for "mille circular mil", an American measuring unit for cable cross-section. 1 MCM=0.5067 mm^2

Motor running Torque generated on output shaft and speed from 0 RPM to maximum speed on motor.

msb Most significant bit.

N

$n_{M,N}$ Nominal motor speed (nameplate data).

n_s Synchronous motor speed.

$$n_s = \frac{2 \times \text{par. } 1-23 \times 60\, s}{\text{par. } 1-39}$$

n_{slip}	Motor slip.

O

Online/offline parameters	Changes to online parameters are activated immediately after the data value is changed. Press [OK] to activate changes to off-line parameters.

P

PCD	Process-control data.
PDS	The PDS is a speed control system for an electric motor, including the CDM and motor, but without the equipment which it powers.
$P_{M,N}$	Rated motor power (nameplate data in kW or hp).
Position error	Position error is the difference between the actual position and the commanded position. The position error is the input for the position PI controller.
Position unit	The physical unit for position values.
Power factor	The power factor is the relation between I_1 and I_{RMS}. $\text{Power factor} = \frac{\sqrt{3 \times U \times I_{1\cos\phi}}}{\sqrt{3 \times U \times I_{RMS}}}$ The power factor for 3-phase control: $\text{Power factor} = \frac{I_1 \times \cos\phi 1}{I_{RMS}} = \frac{I_1}{I_{RMS}} \text{ since } \cos\phi 1 = 1$ The power factor indicates to which extent the drive imposes a load on the mains supply. The lower the power factor, the higher the I_{RMS} for the same kW performance. $I_{RMS} = \sqrt{I_1^2 + I_5^2 + I_7^2} + .. + I_n^2$ In addition, a high-power factor indicates that the different harmonic currents are low. The DC coils in the drive produce a high-power factor, which minimizes the imposed load on the mains supply.
Preset reference	A defined preset reference to be set from -100% to +100% of the reference range. Selection of 8 preset references via the digital terminals.
Process PID	The PID control maintains the required speed, pressure, temperature, and so on, by adjusting the output frequency to match the varying load.
Pulse reference	A pulse frequency signal transmitted to the digital inputs (terminal 29 or 33).

R

RCD	Residual-current device.

S

STW	Status word.
Safe Torque Off (STO)	The STO function brings the drive safely to a no-torque state.
Setup	Save parameter settings in 4 setups. Change between the 4 parameter setups and edit 1 setup, while another setup is active.

Slip compensation	The drive compensates for the motor slip by giving the frequency a supplement that follows the measured motor load keeping the motor speed almost constant.
Start-disable command	A start command belonging to Group 2 control commands, see the *table Function Groups* under *Control Command*.
Stop command	A stop command belonging to Group 1 control commands, see the *table Function Groups* under *Control Command*.

T

$T_{M,N}$	Rated torque (motor).
Target position	The final target position specified by positioning commands. The profile generator uses this position to calculate the speed profile.
Thermistor	A temperature-dependent resistor placed on the drive or the motor.
Trip	A state entered in fault situations, for example, if the drive is subject to an overtemperature or when the drive is protecting the motor, process, or mechanism. The drive prevents a restart until the cause of the fault has disappeared. To cancel the trip state, restart the drive. Do not use the trip state for personal safety.
Trip lock	The drive enters this state in fault situations to protect itself. The drive requires physical intervention, for example when there is a short circuit on the output. A trip lock can only be canceled by disconnecting mains, removing the cause of the fault, and reconnecting the drive. Restart is prevented until the trip state is canceled by activating reset or, sometimes, by being programmed to reset automatically. Do not use the trip lock state for personal safety.

U

U_M	Motor voltage.
$U_{M,N}$	Rated motor voltage (nameplate data).

V

VT characteristics	Variable torque characteristics typical for many pumps and fans.

ENGINEERING
TOMORROW

Danfoss A/S
Ulsnaes 1
DK-6300 Graasten
drives.danfoss.com

Any information, including, but not limited to information on selection of product, its application or use, product design, weight, dimensions, capacity or any other technical data in product manuals, catalogues descriptions, advertisements, etc. and whether made available in writing, orally, electronically, online or via download, shall be considered informative, and is only binding if and to the extent, explicit reference is made in a quotation or order confirmation. Danfoss cannot accept any responsibility for possible errors in catalogues, brochures, videos and other material. Danfoss reserves the right to alter its products without notice. This also applies to products ordered but not delivered provided that such alterations can be made without changes to form, fit or function of the product. All trademarks in this material are property of Danfoss A/S or Danfoss group companies. Danfoss and the Danfoss logo are trademarks of Danfoss A/S. All rights reserved.