KitchenAid® 36" Bottom Mount Built-in Refrigerator

PRODUCT MODEL NUMBERS

KBLC36FM	KBRC36FM
KBLO36FM	KBRO36FM
KBLS36FM	KBRS36FM
KBLV36FP	KBRV36FP

Electrical: A 115 Volt, 60 Hz., AC only 15- or 20- amp fused, grounded electrical supply is required. It is recommended that a separate circuit serving only your refrigerator be provided. Use an outlet that cannot be turned off by a switch. Do not use an extension cord.

A grounded 3 prong electrical outlet should be placed within 4" (10.2 cm) of the right side cabinets or end panel.

Water Supply: A cold water supply with water pressure between 30 and 120 psi (207 - 827 kPa) is required to operate the water dispenser and ice maker. If you have questions about your water pressure, call a licensed, qualified plumber.

The water shutoff should be located in the base cabinet on either side of the refrigerator or some other easily accessible area. If the water shutoff valve is not in the cabinets, the plumbing for the water line can come through the floor or the back wall.

IMPORTANT: The pressure of the water supply coming out of a reverse osmosis system going to the water inlet valve of the refrigerator needs to be between 30 and 120 psi (207 - 827 kPa).

If a reverse osmosis water filtration system is connected to your cold water supply, the water pressure to the reverse osmosis system needs to be a minimum of 40 to 60 psi (276 - 414 kPa).

Do not install the refridgerator near an oven, radiator, or other heat source, or in a location where the temperature will fall below 55°F (13°C).

OVERALL DIMENSIONS

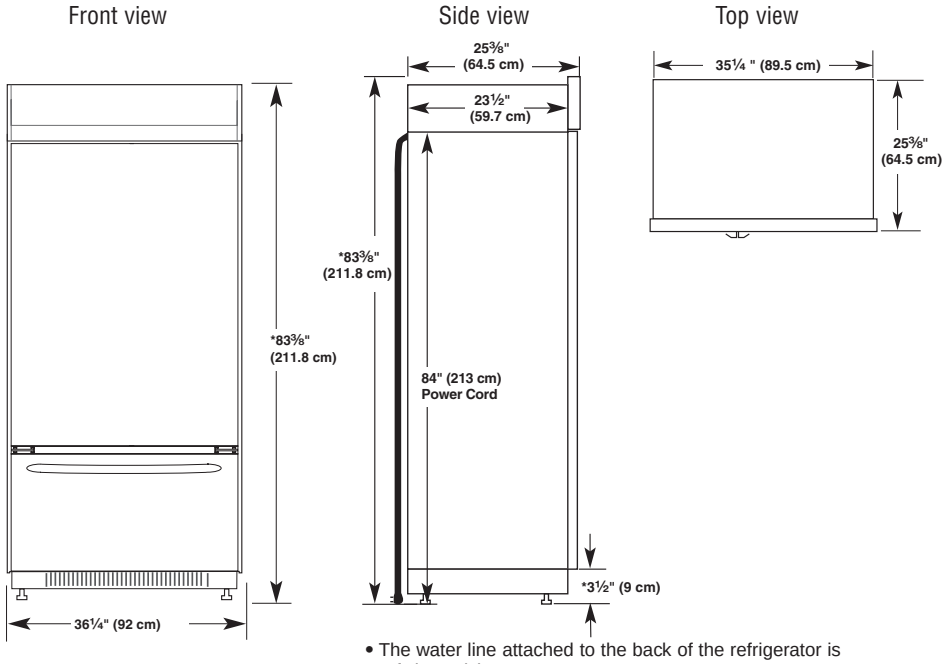

- The water line attached to the back of the refrigerator is 5 ft (1.5 m) long.
- Height dimensions are shown with leveling legs extended ⅛" (3 mm) below the rollers.

* When leveling legs are fully extended to 1¼" (32 mm) below rollers, add 1⅛" (29 mm) to the height dimensions.

CABINET OPENING DIMENSIONS

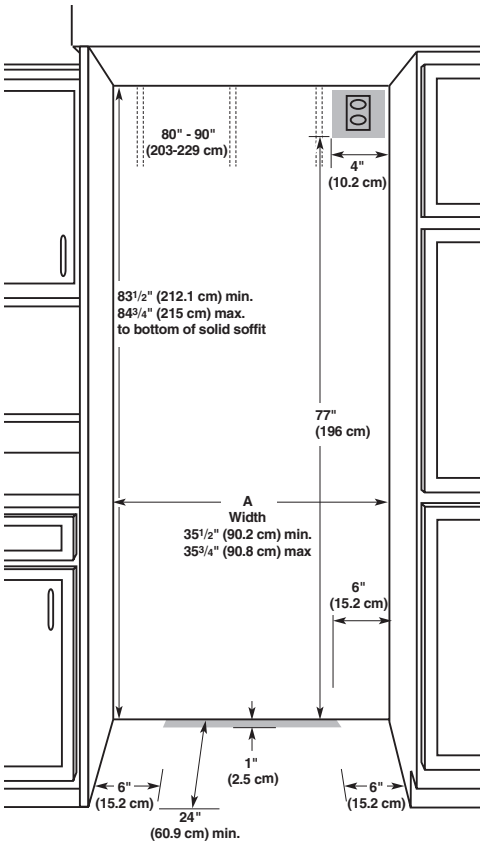

DOOR SWING DIMENSIONS

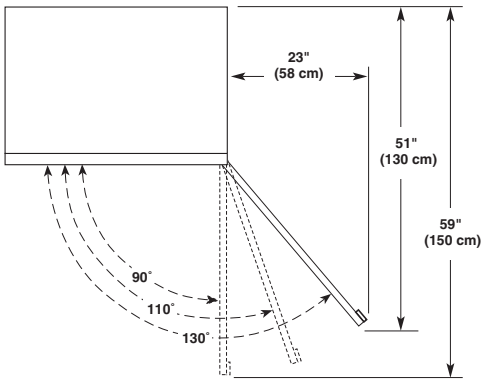

A solid soffit must be within 1" (2.5 cm) maximum above the refrigerator. If the solid soffit is higher than 1" (2.5 cm) or one is not available, then the refrigerator must be braced to prevent tipping during use.

If the anti-tip boards are needed, they must be attached to the rear wall studs 80" to 90" (203 to 229 cm) above the floor.

NOTE: A clearance of 1/2" (1.3 cm) must be maintained in front of the refrigerator's side trim in order for the top grille to be removed.