# Strikes

## Model 10-109 = 10-094x10-001

**Jamb Type:** Wood
**Style:** Combo Square corner, box 1⅛" x 2¾", T Strike, Square corner, box, 1⅛" x 2¾"
**Standard for:** S200
**Optional for:** CS210

NOTES:
1. Dimensions X , Y and Z are variables dependent on door thickness.
2. Strike locations on frames must be adjusted for thickness of door silencers when used.
3. Curved strike extension beyond jamb at Z must not be less than 3⁄16" (5) to ensure proper functioning of latch bolt.
4. 1⅛" (29) lip length for 1⅜" (35) to 1¾" (44) doors. Other lengths available.

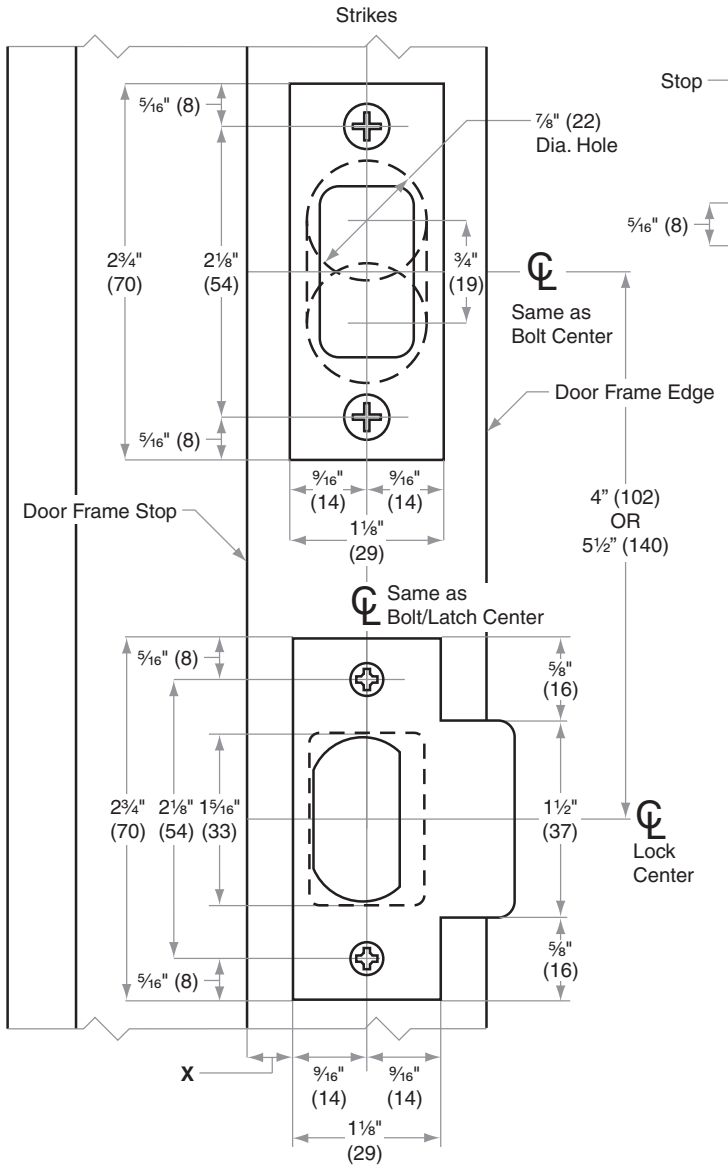


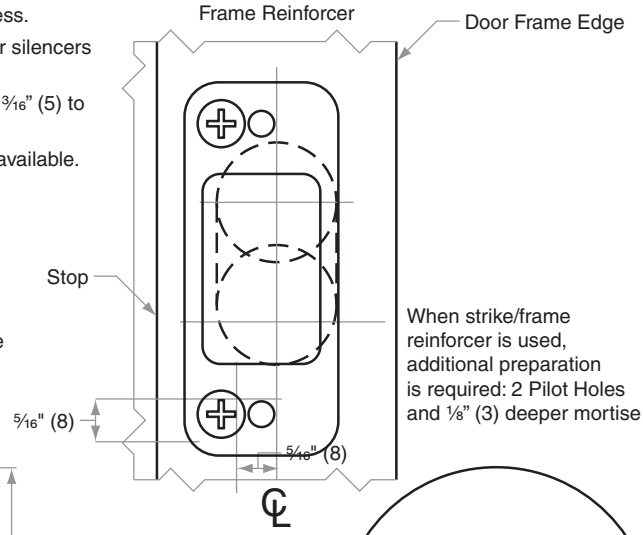


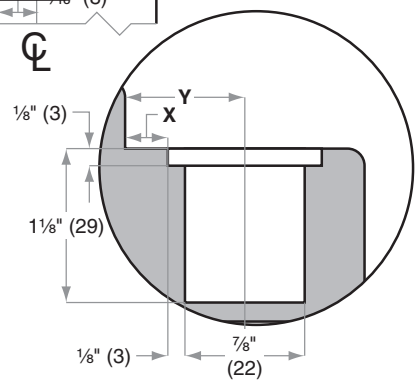


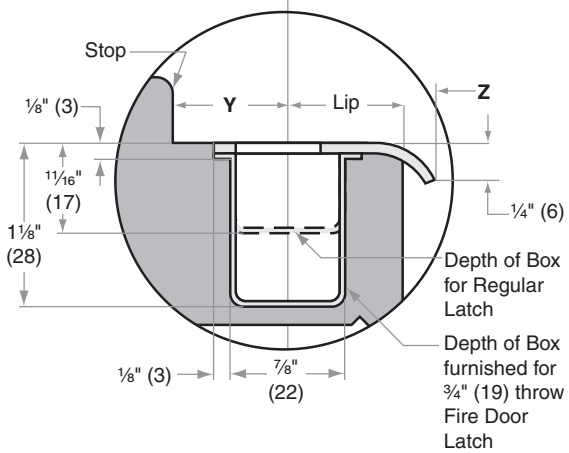


**Dimensions shown in parentheses ( ) are in millimeters.**

Door preparation template

**J939**

© 2021 Allegion
J939 Rev. 02/21
www.allegion.com/us