INSTRUCTION MANUAL

Gazebo with Sidewall Curtains G30004

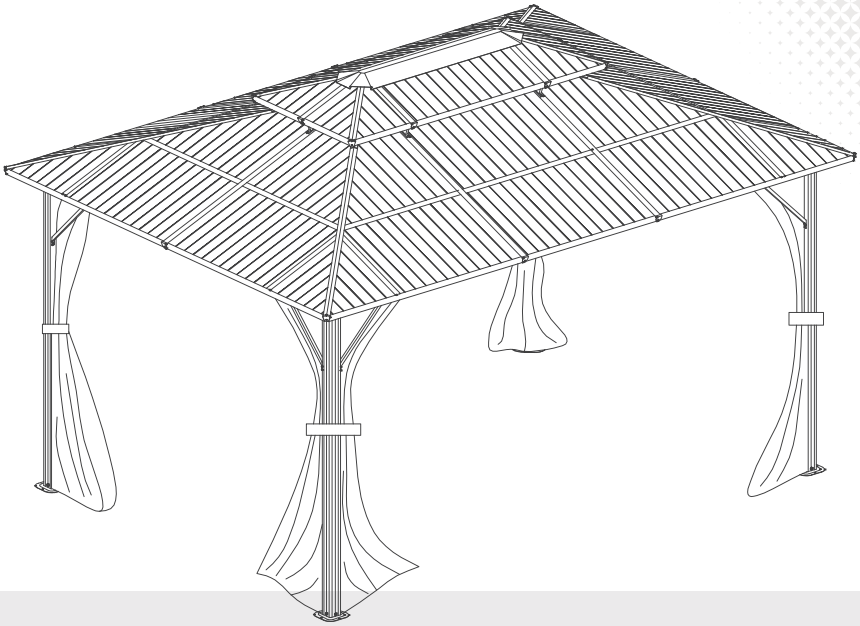

Gazebo with Sidewall Curtains G30004

We offer a diverse range of products to meet the needs of customers.

Outdoor Furniture

We are a professional furniture provider with top-notch factories and outstanding designs, Our mission is to provide consumers with new lifestyles. By collecting consumer feedback, we constantly improve our products and create more choices for consumers.
If you want to create your space, We are an ideal choice.

Always.

WARNING

Ensure that all parts and hardware are available before beginning assembly

⚠ WARNING

- In case of windy weather, please do not stand in the gazebo.
- Please do not stand under the gazebo in case of heavy snowfall.
- For safety, please use expansion screws to reinforce the posts to the ground.
- In windy weather, please tighten the fence and netting to avoid tearing in high winds.
- In extreme weather conditions, you can use a rope to pull the four corners of the gazebo to keep it stable.
- Please clear the snow off the roof in time for the heavy snowfall.
- Make sure all screws are tightened before use.
- Repeat to confirm all screws, buckles and straps every 90 days.
- Please keep all screws loose during the assembly process and tighten them after completing the installation.
- Do not use or store next to a pole with an open flame or flammable chemicals.
- Please note that some parts have sharp edges and should be handled with gloves.
- If any parts are missing, broken, damaged or worn, discontinue use of the product until repairs are made or factory replacement parts are installed.
- Installation of the product in a manner that does not conform to the manufacturer's instructions may result in the loss of the warranty policy for this product.

ⓘ CALIFORNIA PROPOSITION 65

WARNING: This product can expose you to Carbon monoxide, which is known to the State of California to cause birth defects or other reproductive harm. For more information go to www.P65Warnings.ca.gov

TOOLS REQUIRED

- Electric Screwdriver
- Manual Screwdriver
- Ladder
- Gloves
- Spanner

2-4 Persons Assembly

Minimum 120 Minutes For Assembly

ATTENTION:

1.Please read this instruction carefully before installation and follow it strictly during installation.

2.Ensure that there are no problems later due to installation errors.

3.We have prepared extra screws for you to use in case of loss or damage.

Installation Notes

Please check the quantity of all parts before installation (Please refer to the Parts Lists) and the appearance of the products. Please make sure the product is correct before installation. If there is any problem, please contact us directly.

Make sure the colored panels are facing outwards and all the holes match. The panels are textured, please install the panels in the order specified in the instructions. All lines and holes must be accurately matched to make the storage shed more stable. Please ensure that all screws are tightened to prevent the product from falling apart.

There is a protective film on the surface to protect the product, please tear it off after installation to get the final presentation. If you do not damage the film during installation, it can also remain on the product to protect the product.

Please place the product on a flat ground to prevent leaning and collapse. If the ground is uneven, the door may can't be closed.

Safety Precautions

We recommend two adults to complete the installation. Two adults installed together will make the installation process easier and safer.

The gloves must be carried to prevent hand cuts during installation.

Take care when using power tools near water the use of a residual current device (RCD) is advised. Please use the electric driver carefully during screwing to prevent the screw from slipping and hurting your hand. (We recommend that beginners use a manual screwdriver for installation.) Be careful not to fall when installing the roof. Please steady the ladder and make sure the product placed on a flat ground.

PLEASE KEEP THIS INSTRUCTION FOR FUTURE REFERENCE.

PARTS

A		4PCS
B		2PCS
B1		2PCS
C		2PCS
C1		2PCS
D		4PCS
D1		4PCS
D2		4PCS
D3		4PCS
E		6PCS
E2		6PCS
E3		6PCS
F		4PCS
F1		4PCS
F2		4PCS

PARTS

G		4PCS
G1		4PCS
H		8PCS
H1		4PCS
I1		4PCS
J2		4PCS
I		4PCS
J		4PCS
J1		2PCS
K		2PCS
K1		2PCS
O		4PCS
P		4PCS
Q		4PCS
Q1	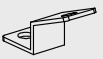	6PCS
R	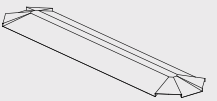	1PCS

PARTS

S		1PCS
T	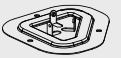	4PCS
X		12PCS
Y		12PCS
Y1		4PCS
W2	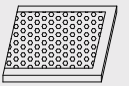	1PCS
W	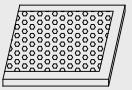	4PCS
W1	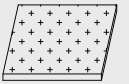	4PCS
Z		112PCS
L1	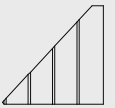	4PCS
M4		2PCS
L2	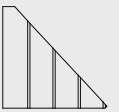	4PCS
M1	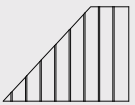	4PCS
M3	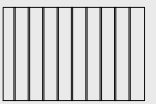	4PCS
N1	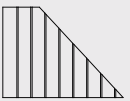	4PCS
M5	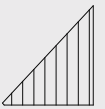	4PCS

PARTS

M	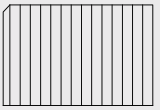	4PCS
N5	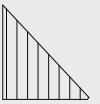	4PCS
N	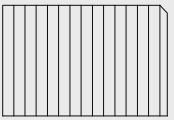	4PCS
U	M6x15 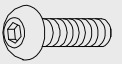	144PCS
U1	ST 4.8X12	24PCS
U2	M5x15	12PCS
U3	M6x28	8PCS
U4	M6x30	20PCS
V1		2PCS
V2	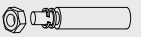	12PCS
V3	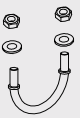	1PCS
V4		12PCS
V	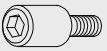	24PCS
	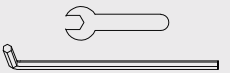	

PRODUCT ASSEMBLY

1 Attach the bottom of part "A" to part "T" and tighten with 3 screws "U".

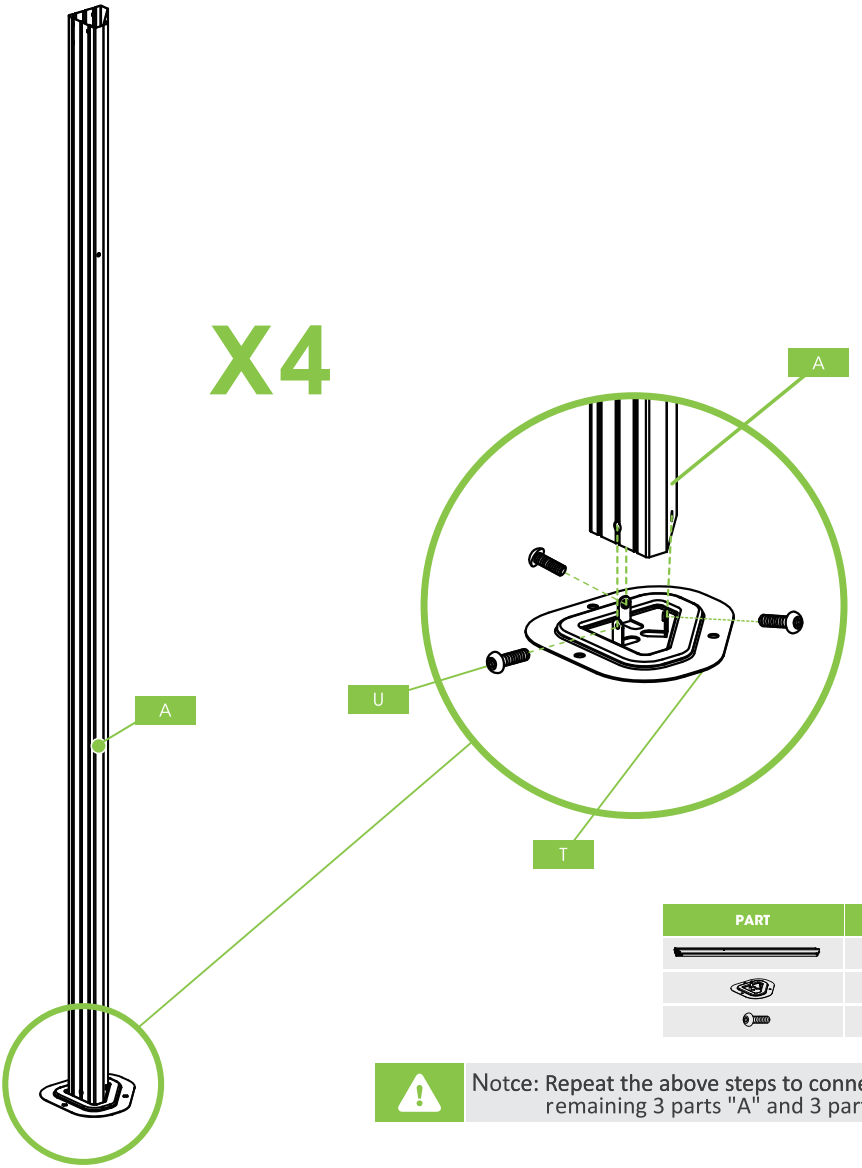

PART	NO.	QTY.
	A	4
	T	4
	U	12

Notce: Repeat the above steps to connect the remaining 3 parts "A" and 3 parts "T"

PRODUCT ASSEMBLY

2 Place the connecting part "O" in the right frame of part "B1" and in the left frame of part "B".

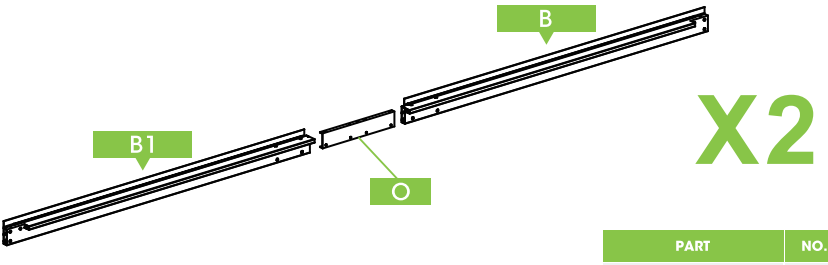

PART	NO.	QTY.
	B	2
	B1	2
	O	2

3 Connecting part "B" and part "B1" with 12 screws "U"

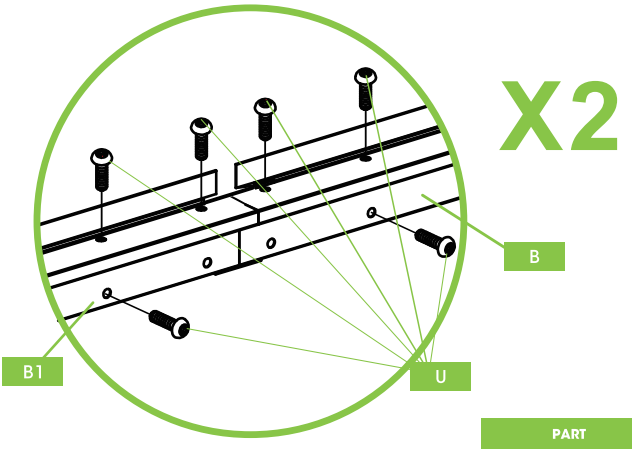

PART	NO.	QTY.
	U	12

Notice: Before fixing, please make sure all the screw holes are aligned

PRODUCT ASSEMBLY

4 A part "Q" and a part "Q1" are connected with a screw "U2" on the outside of the connection.

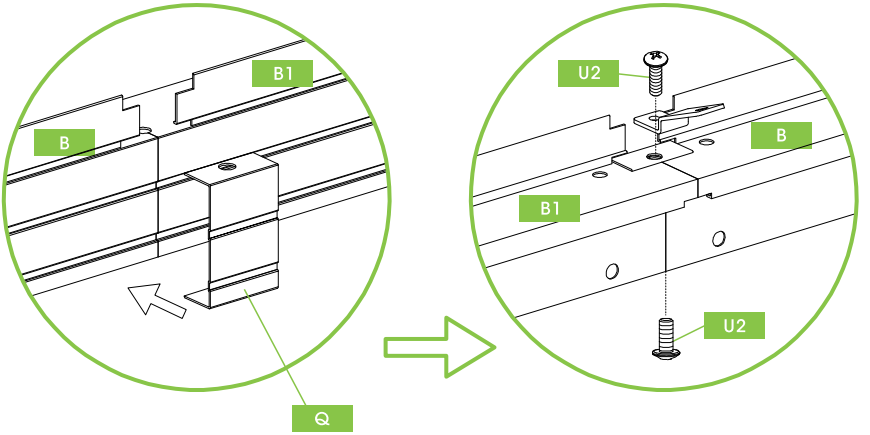

PART	NO.	QTY.
	Q	2
	Q1	2
	U2	4

X2

Notice: Repeat the above steps to connect the remaining 1 part "B" and 1 part "B1"

---

5 Place the connecting part "O" in the right frame of part "C1" and in the left frame of part "C".
Connecting part "C" and part "C1" with12 scews "U".

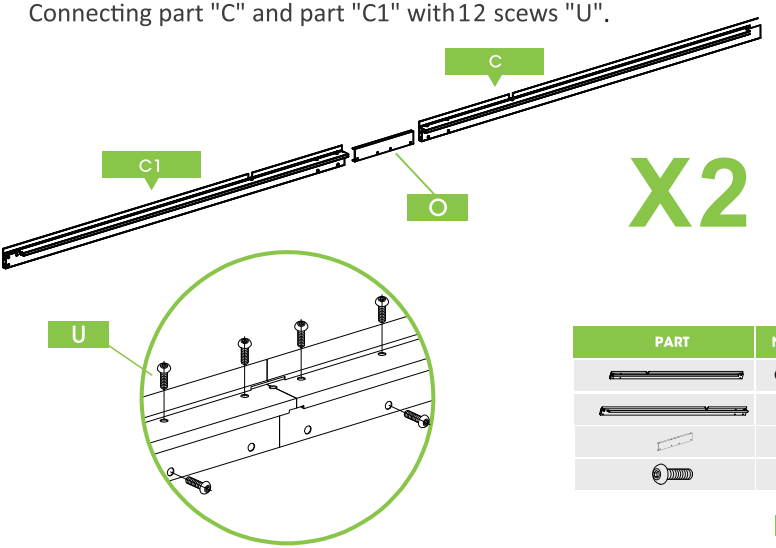

X2

PART	NO.	QTY.
	C1	2
	C	2
	O	2
	U	12

PRODUCT ASSEMBLY

6 fixed with 4 screws "U2".

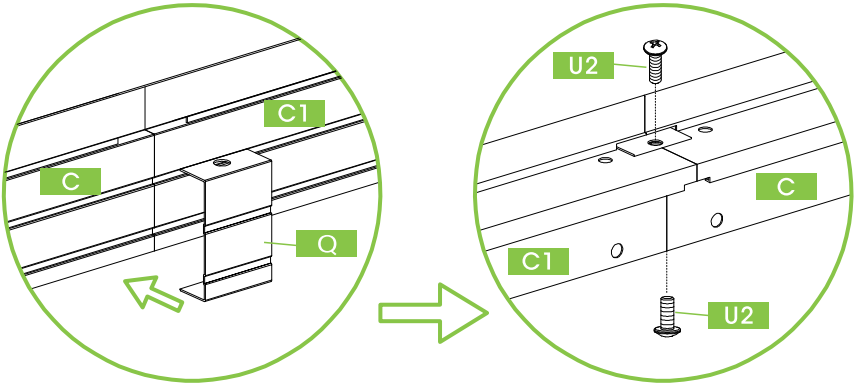

X2

PART	NO.	QTY.
	Q	2
	U2	4

Notice: Before fixing, please make sure all the screw holes are aligned

7 Four part "Q1" is fixed at the top with Four screw "U2".

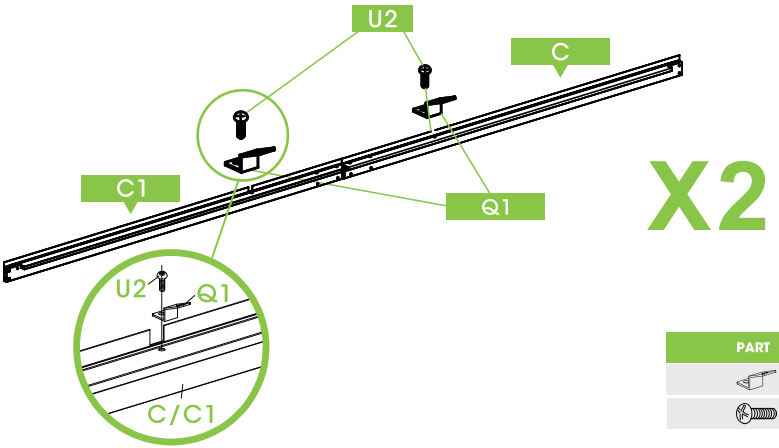

X2

PART	NO.	QTY.
	Q1	4
	U2	4

Notice: 1.Before fixing, please make sure all the screw holes are aligned
2. Repeat the above steps to finish conneccng the other part "C" and part "C1".

PRODUCT ASSEMBLY

8 Attach the ends of part "C" and part "C1" to the top of part "A", using six screws “V" to connect the two sides.

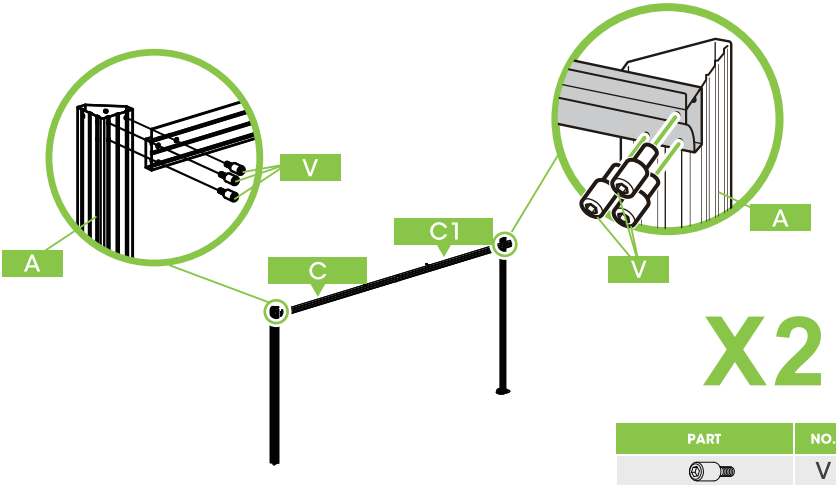

PART	NO.	QTY.
	V	12

9 Attach the ends of part "B" and part "B1" to the top of part "A", using six screws “V" to connect the two sides.

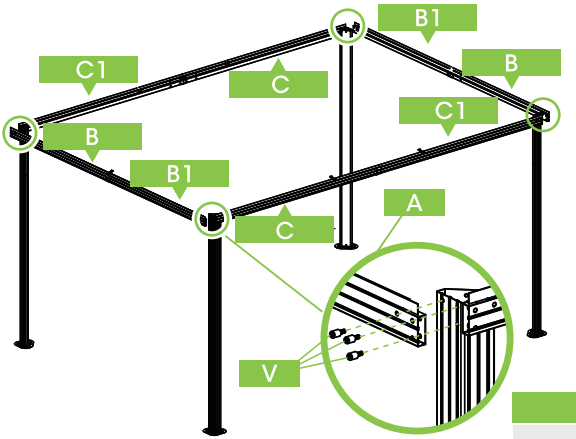

PART	NO.	QTY.
	V	12

Notice: Repeat the above steps to atach the remaining part "B" and part "B1" to the top of part "A".

PRODUCT ASSEMBLY

10 Connect the four parts "P" to the four corners and fix them with 16 screws "U1".

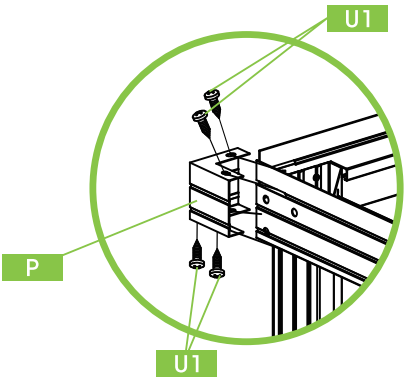

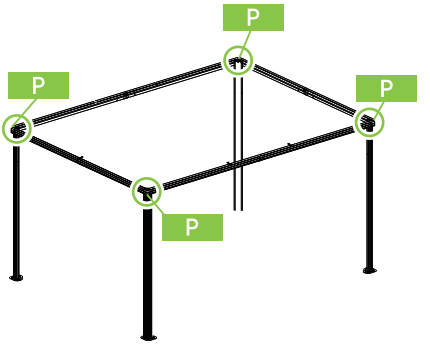

PART	NO.	QTY.
	P	4
	U1	16

11 In the interior view of the gazebo, eight parts "H"are attached to the sides of the columns using 16 screws "U".

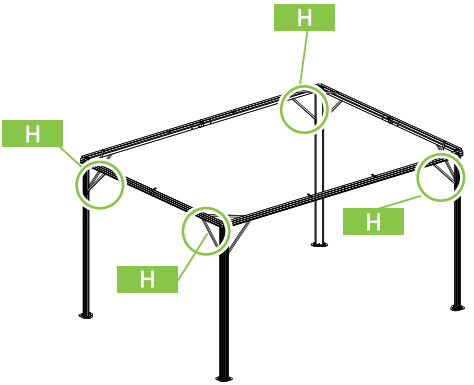

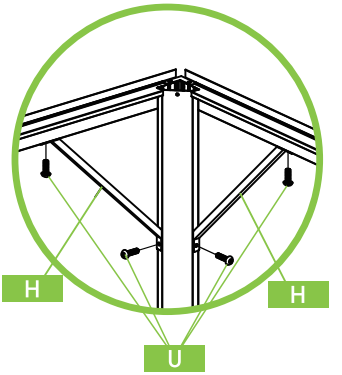

PART	NO.	QTY.
	H	8
	U	16

PRODUCT ASSEMBLY

12 Four parts "H1" are attached to the four corners using 8 screws "U3".

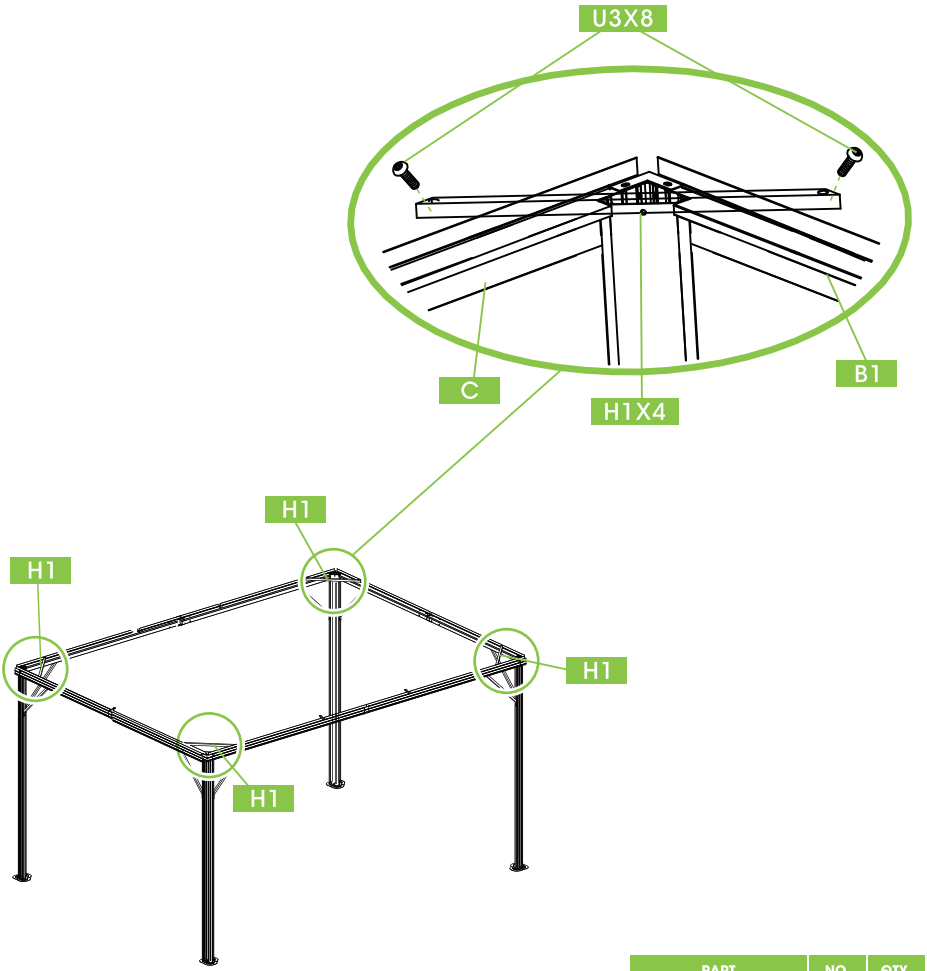

PART	NO.	QTY.
	H1	4
	U3	8

Notice: When installing screws, please put the screws from the middle space, not directly from the top.

PRODUCT ASSEMBLY

13

1.Connect the part"D2"and part"D"with 2screws"U4"
2.Connect the part"D1"and part"D2"with 2screws"U"

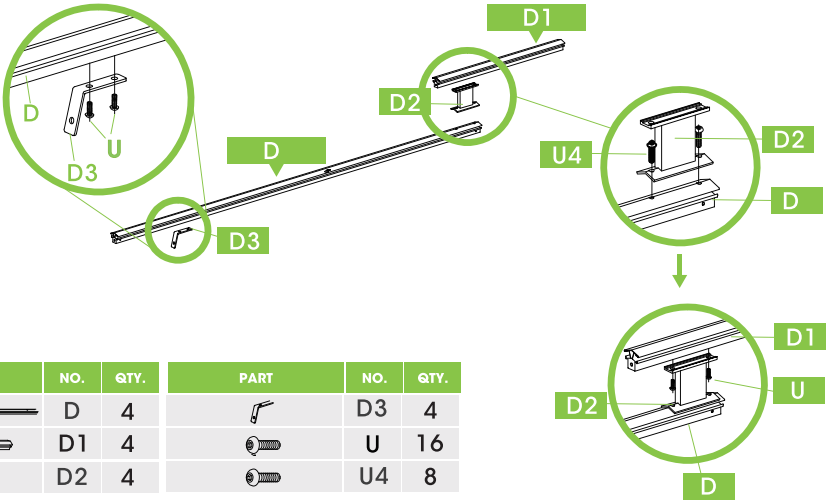

PART	NO.	QTY.	PART	NO.	QTY.
	D	4		D3	4
	D1	4		U	16
	D2	4		U4	8

Notice:Repeat the above steps to connect the remaining 3 parts"D1" 3 parts"D2"and 3 parts"D"

14

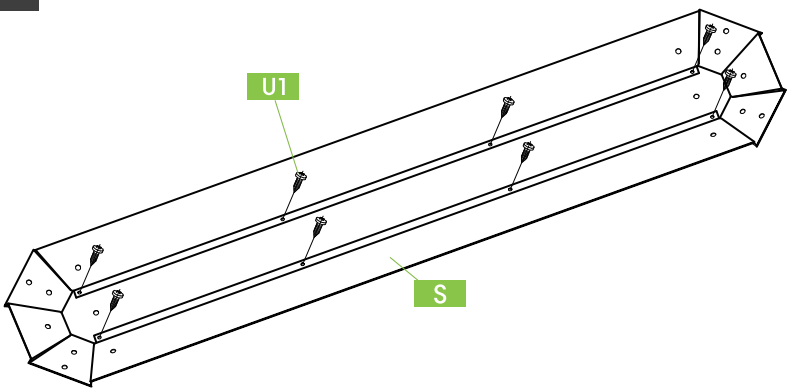

PART	NO.	QTY.
	S	1
	U1	8

PRODUCT ASSEMBLY

15 Connect 4 parts "D1" to part "S" and fix them with 8 screws "U".
Fix part "V3" through part "S".

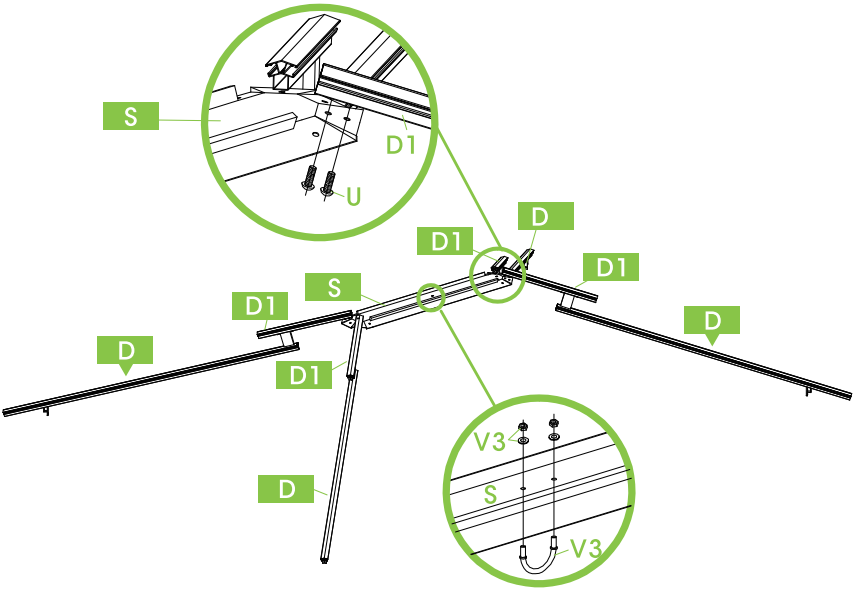

PART	NO.	QTY.
	S	1
	V3	1
	U	8

PRODUCT ASSEMBLY

16 Move the whole roof to the shelf and fix the part "D" with four screws "U".

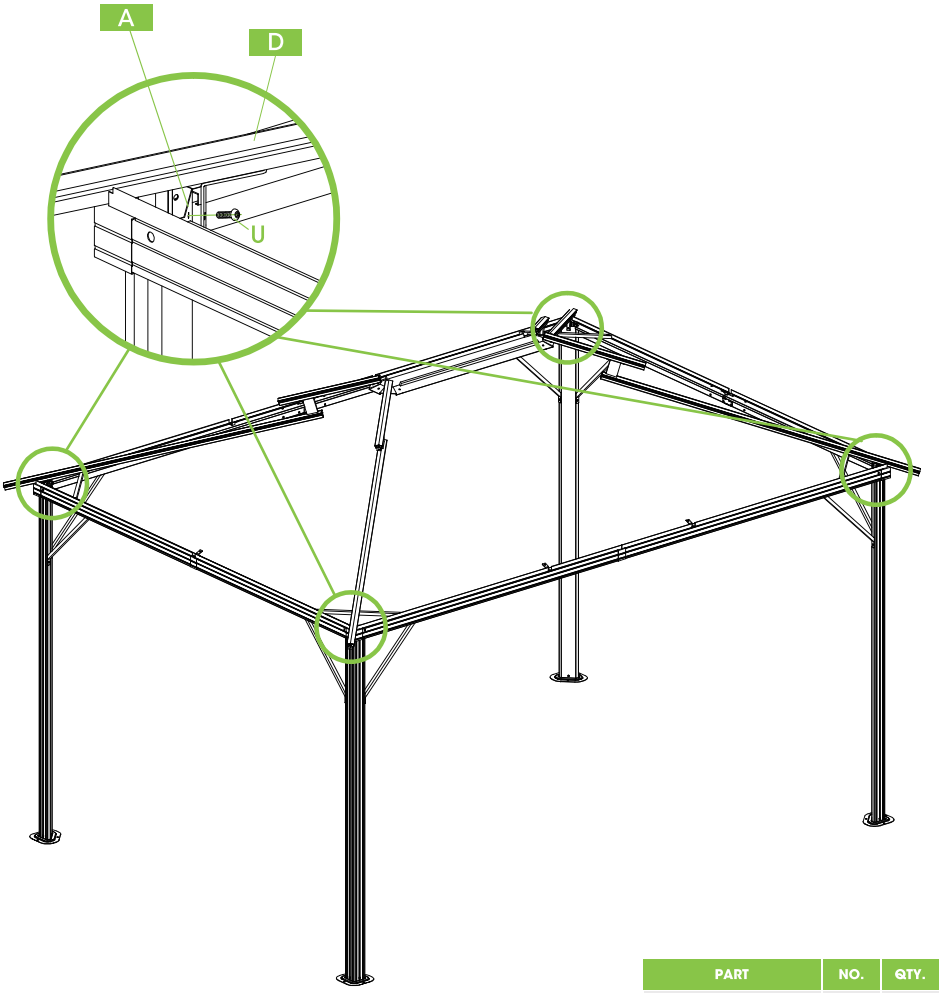

PART	NO.	QTY.
	U	4

PRODUCT ASSEMBLY

17

1.Connect the part"E3"and part"E2"with 2screws"U"
2.Connect the part"E3"and part"E"with 2screws" U4"

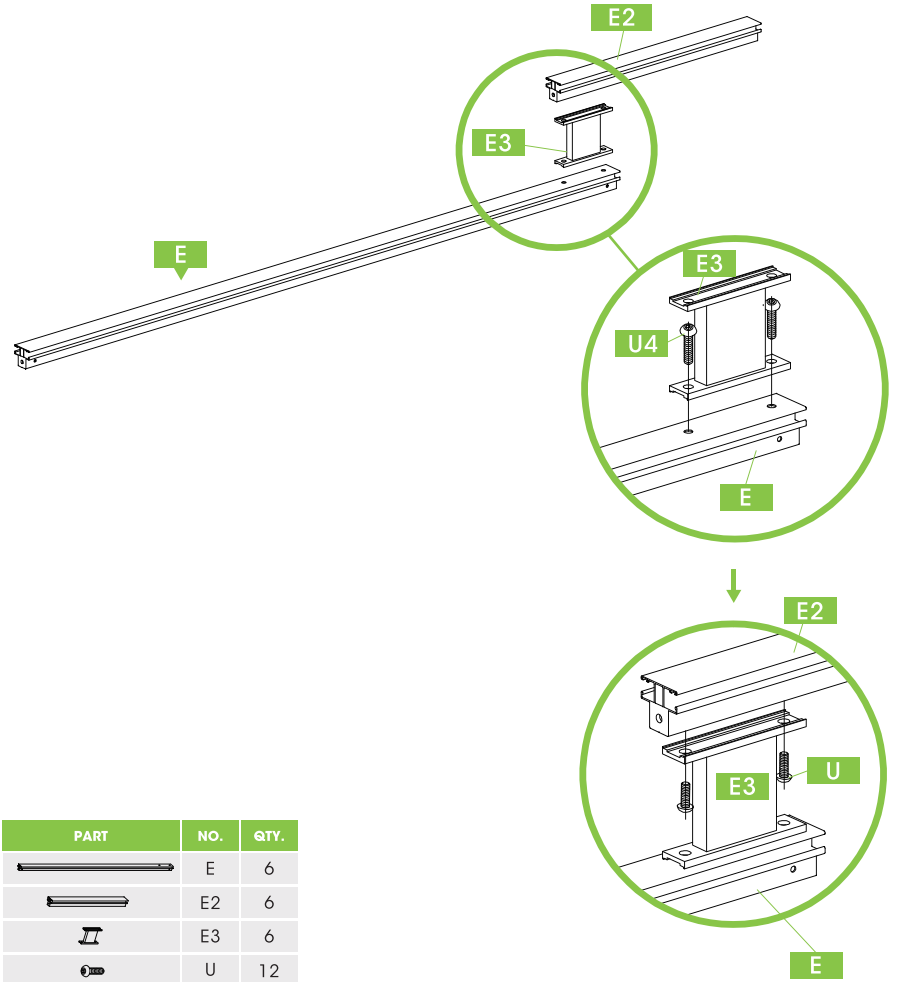

PART	NO.	QTY.
	E	6
	E2	6
	E3	6
	U	12
	U4	12

Notice:Repeat the preceding steps to install the remaining components

PRODUCT ASSEMBLY

18

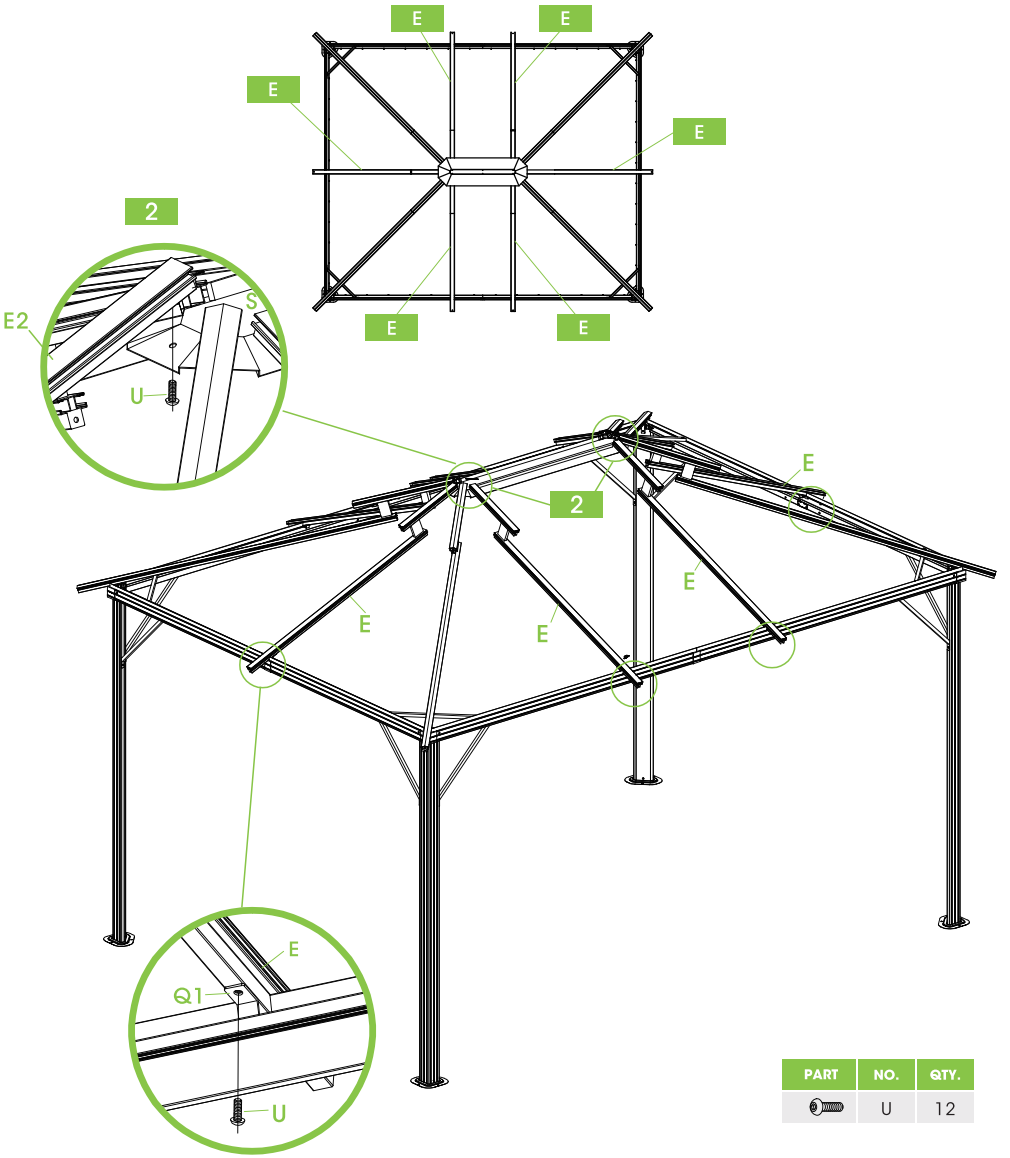

PART	NO.	QTY.
	U	12

PRODUCT ASSEMBLY

19 Use 4 parts "Y" and 10 screws "U" to fix part "K1" and part "K".

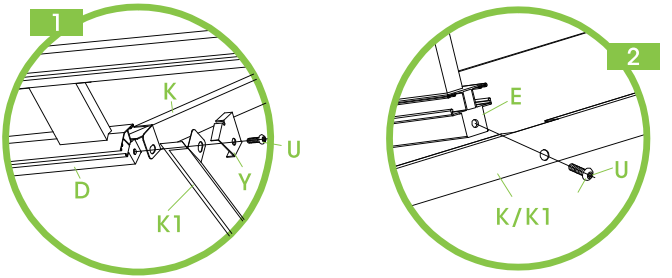

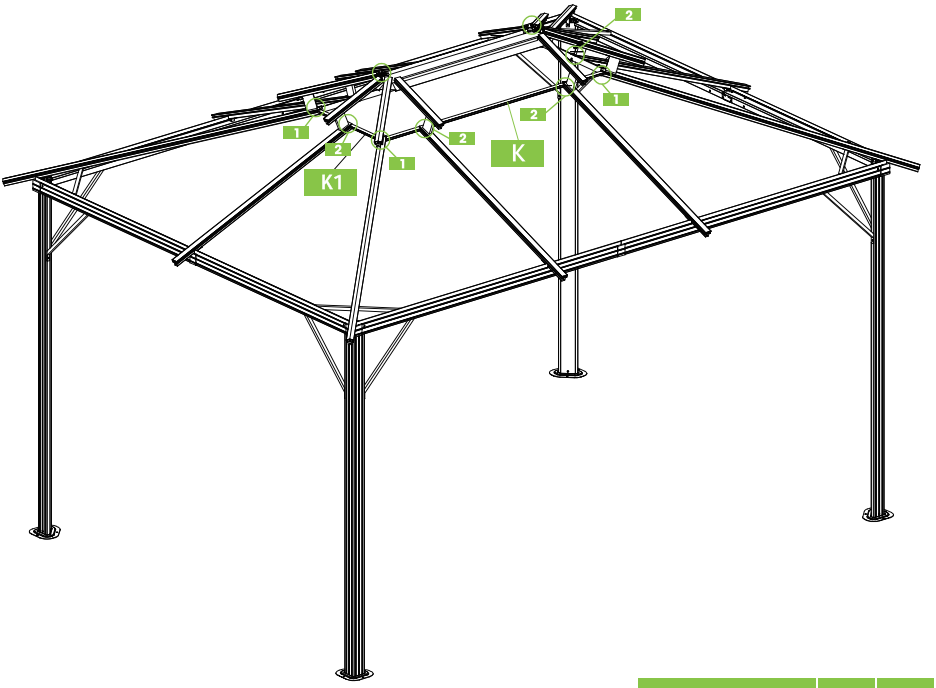

PART	NO.	QTY.
	K	2
	K1	2
	Y	4
	U	10

PRODUCT ASSEMBLY

20 Place part "R" on the top of part "S" and secure it with two parts "V1".

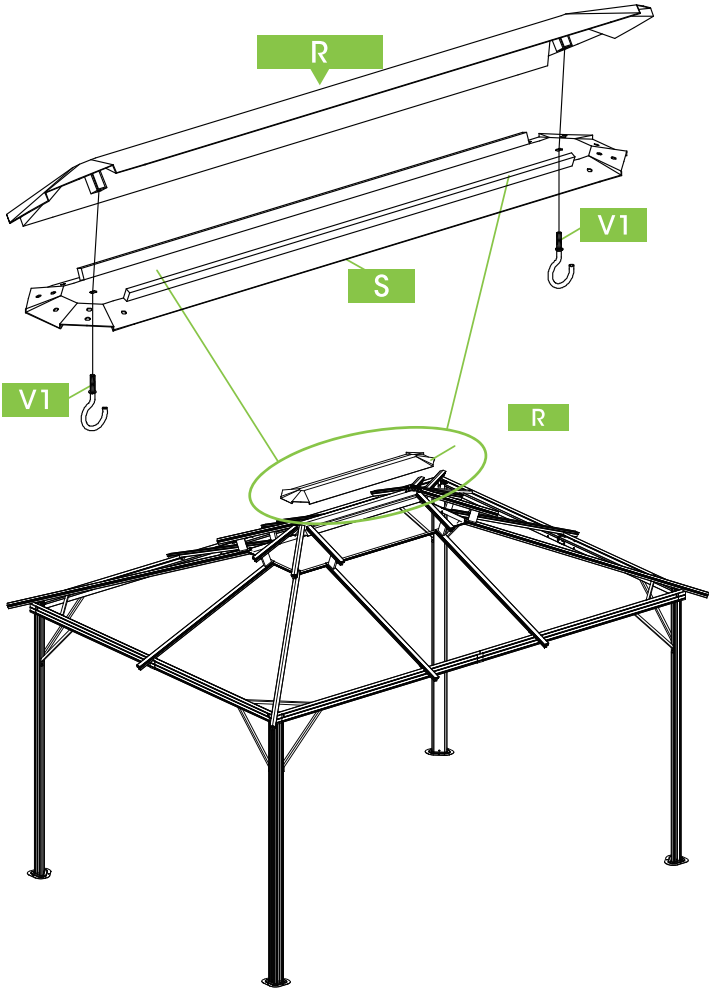

PART	NO.	QTY.
	R	1
	V1	2

PRODUCT ASSEMBLY

21 First,place part "L1",part "L2"and part"M4" on the open space in the order ofinstallation,so that they can be installed in order during installation.

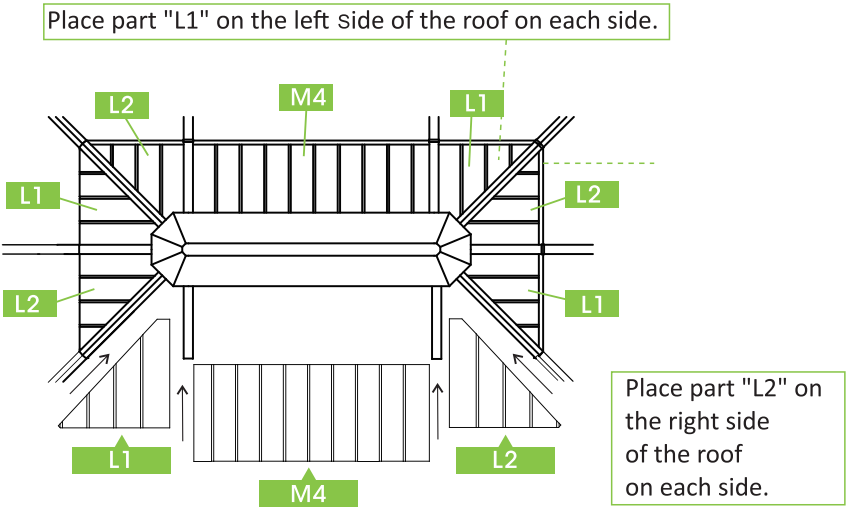

Place two parts "M4" in the middle of part "L1" and part "L2".

PART	NO.	QTY.
	L1	4
	M4	2
	L2	4

PRODUCT ASSEMBLY

22 Use 4 screws "U" to fix the part "Y" in the four corners Fix the part "X"with 6 screws "U".

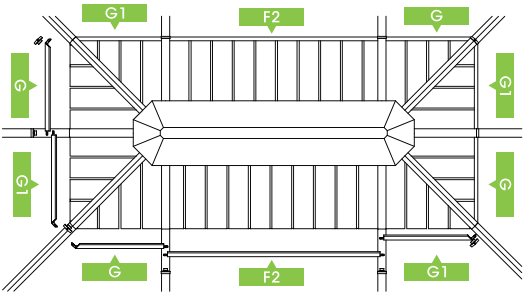

PART	NO.	QTY.
	F2	2
	G	4
	G1	4
	X	6
	Y	4
	U	10

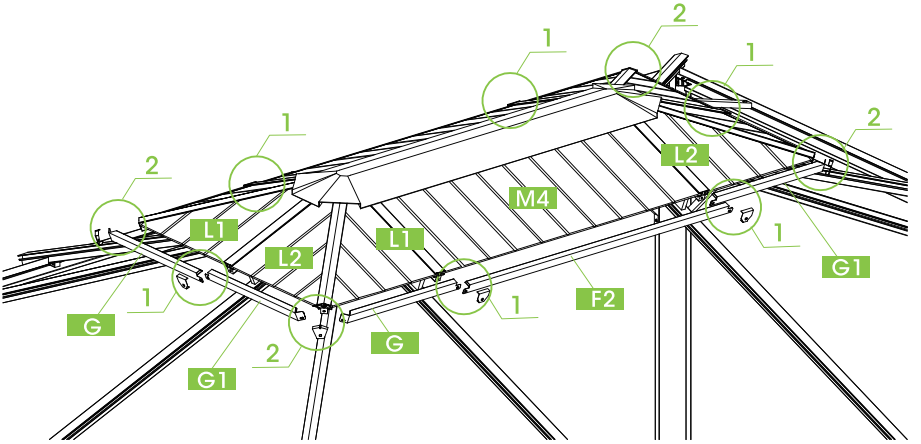

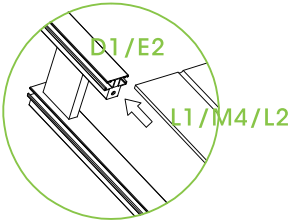

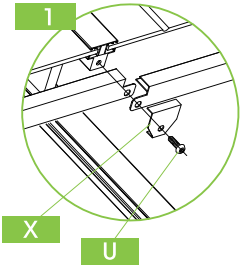

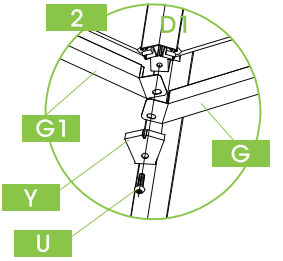

PRODUCT ASSEMBLY

23 The correct part location is shown in the figure below.

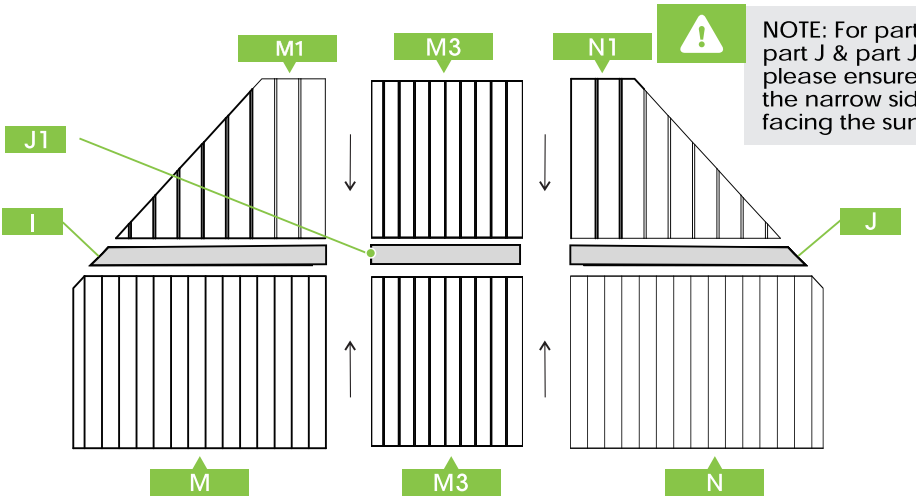

NOTE: For part I, part J & part J1, please ensure that the narrow side is facing the sun.

Connecting 4 parts "M" and 4 parts "M1" by

Connecting to parts "M3" with one part "J1"

Connecting 4 parts "N" and 4 parts "N1" by 4 parts "J"

24 The panel mounting method is as follows

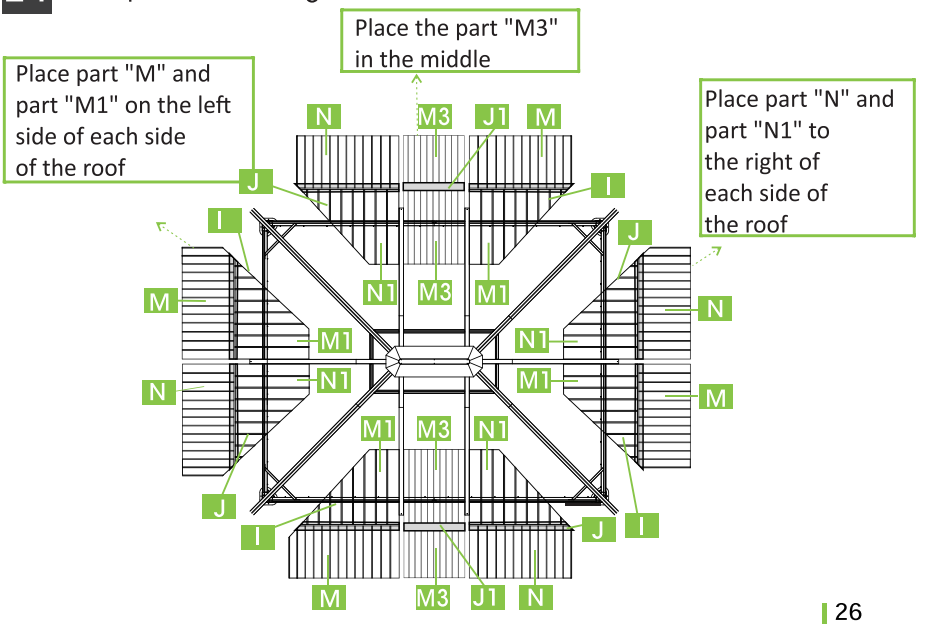

PRODUCT ASSEMBLY

25 The panel mounting method is as follows

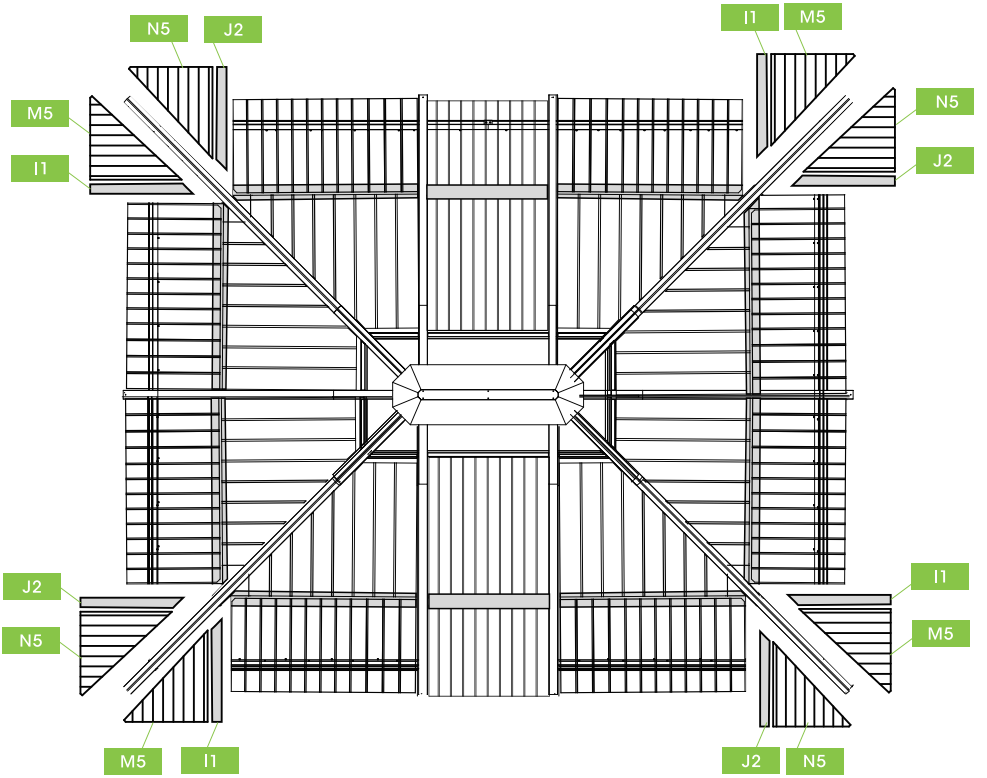

PART	NO.	QTY.
	M5	4
	N5	4
	I1	4
	J2	4

PRODUCT ASSEMBLY

26 The positions of parts "F","F1" and "F2" are as follows.

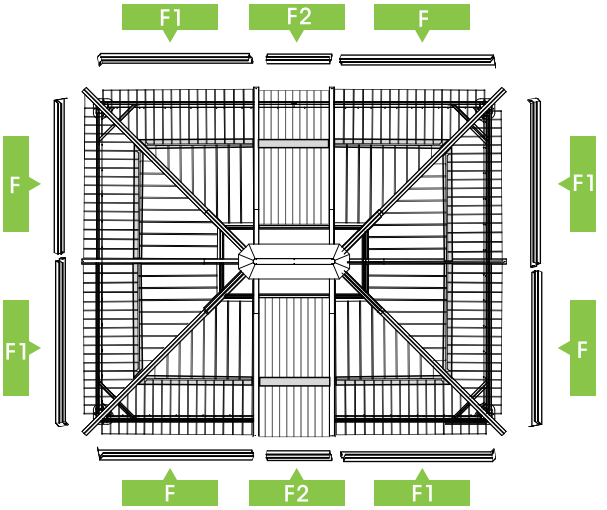

27 Use 6 parts "X" and 6 screws "U" to fix parts "F" and "F2". Use 4 parts "Y" and 4 screws "U" to fix parts "F" and "F1".

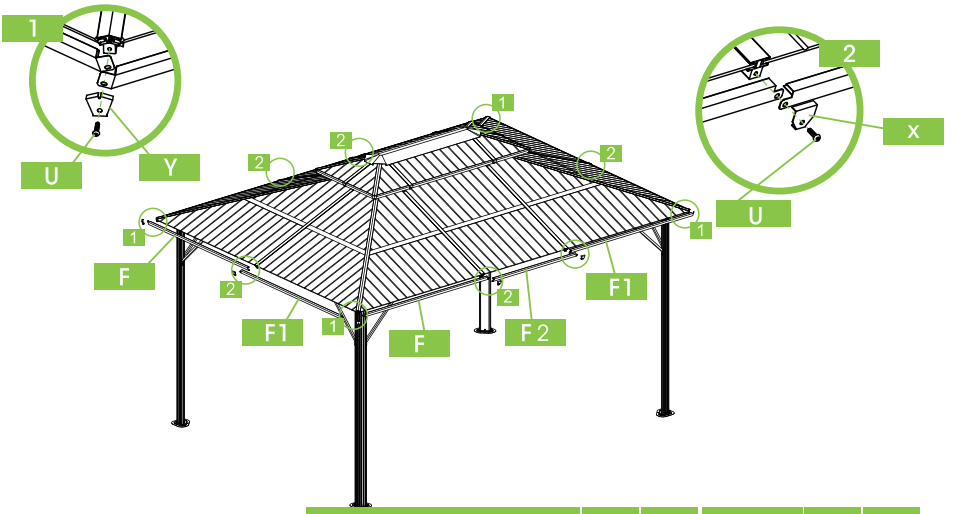

PART	NO.	QTY.	PART	NO.	QTY.
	F	4		Y	4
	F1	4		X	6
	F2	2		U	10

PRODUCT ASSEMBLY

28

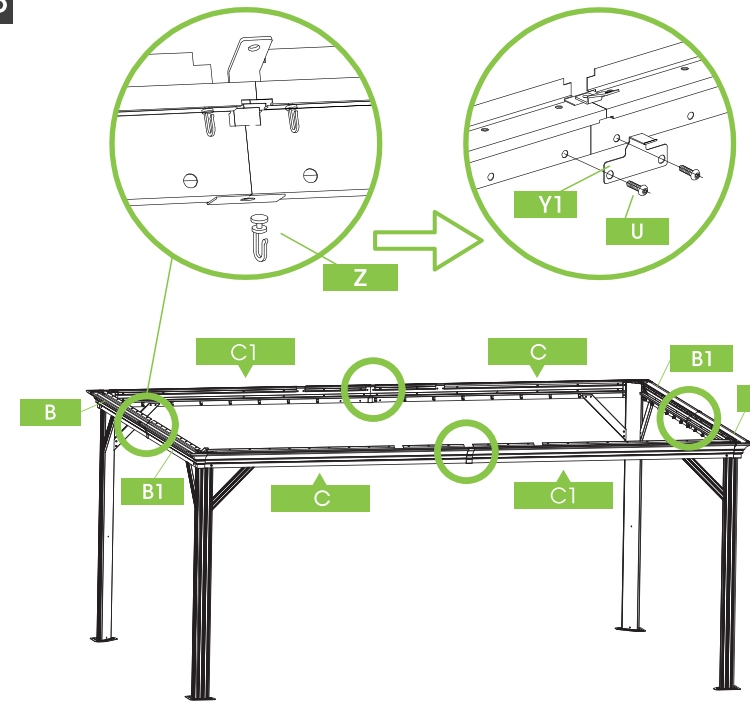

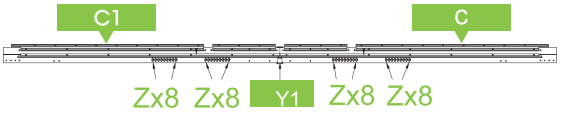

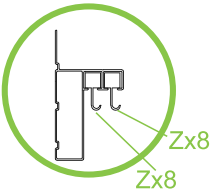

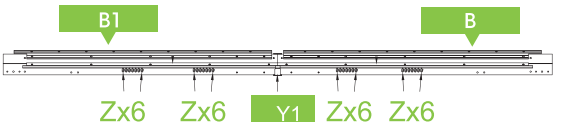

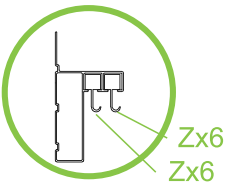

PART	NO.	QTY.
	Y1	4
	U	8
	Z	112

29

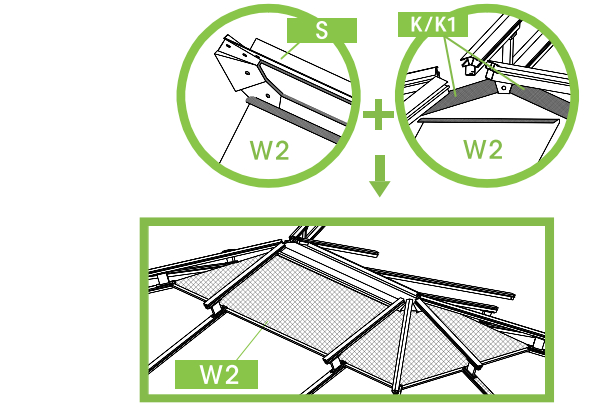

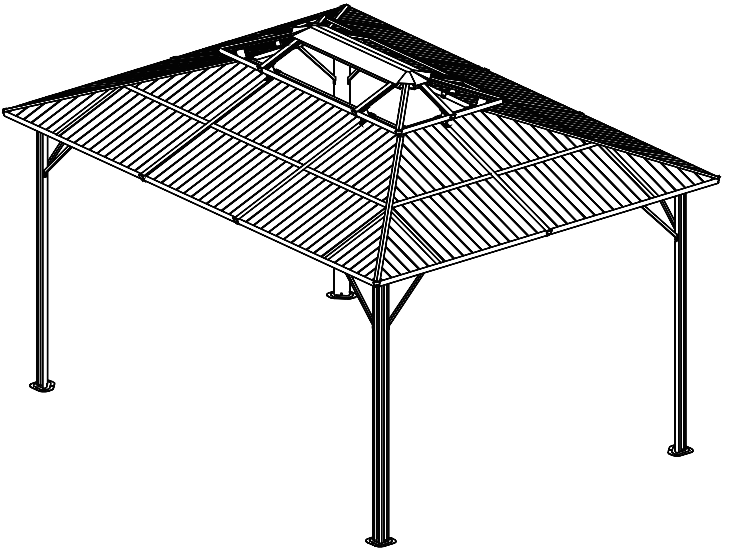

PART	NO.	QTY.
	W2	1

PRODUCT ASSEMBLY

30 Hang part "W" and part "W1" on part "Z", with 8 holes on the long side and 6 holes on the short side.

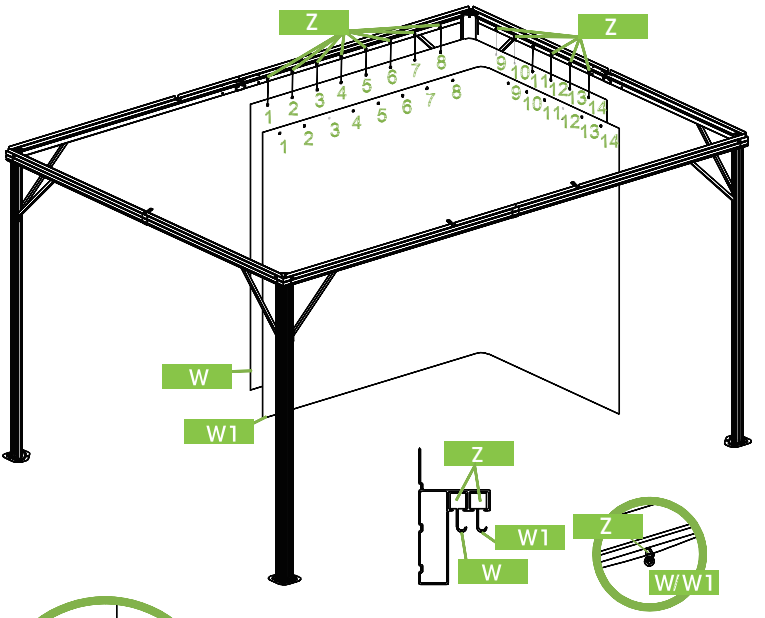

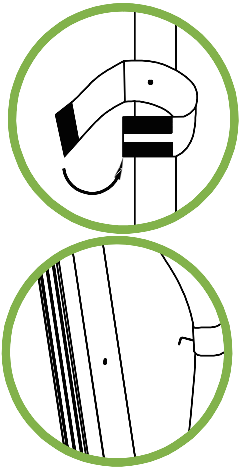

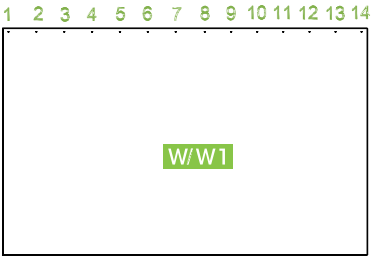

PART	NO.	QTY.
	W	4
	W1	4

Notice: After installing parts "W" and "W1", fix them to part "A".

PRODUCT ASSEMBLY

31

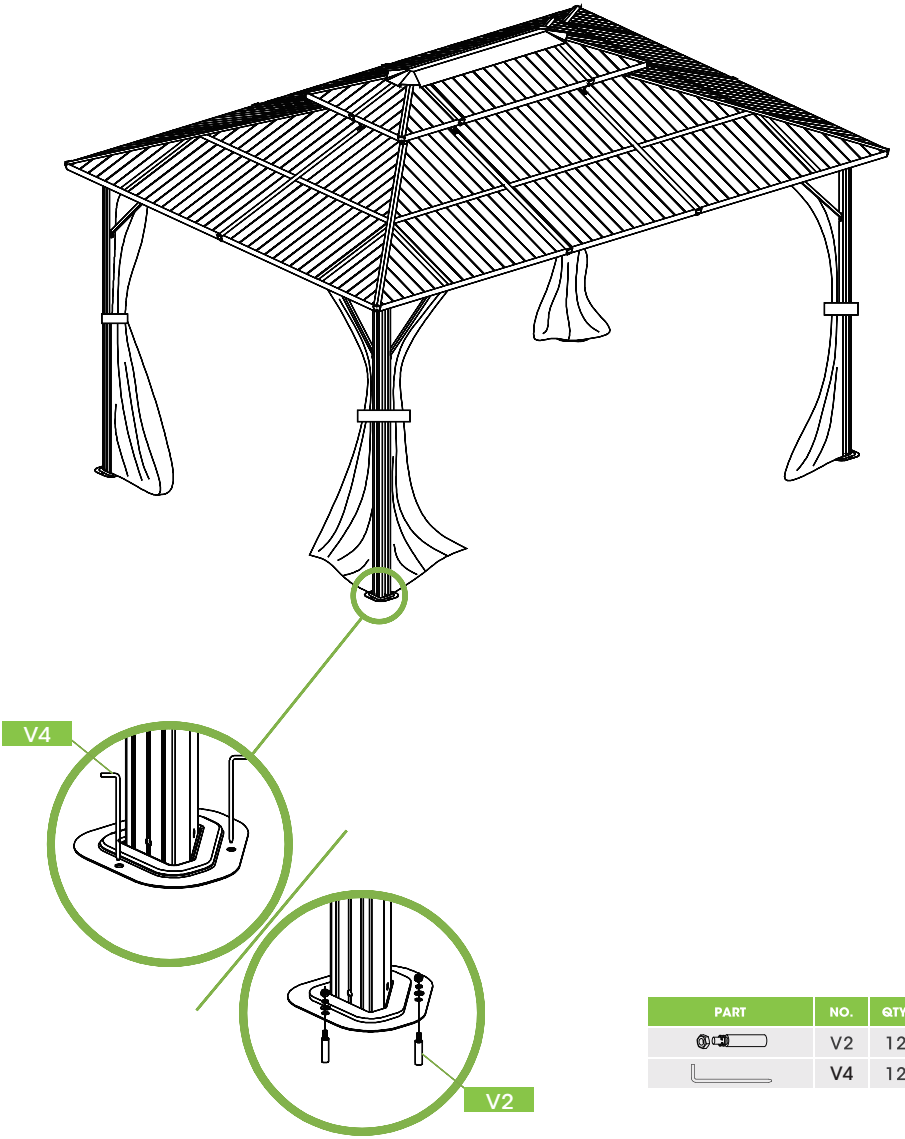

PART	NO.	QTY.
	V2	12
	V4	12

HELP CENTER

Question about your product? We're here to help. Visit us at:

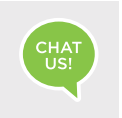

Chat Support

Product Inquiry

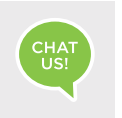

Orders FAQ

Product Assembly

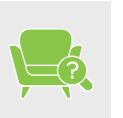

Returns & Refunds

We Stands Behind the Quality of Their Furniture

If you have any issues with your item please let us know! We will always do our best to come up with a solution that you will be happy with.Please get in touch with our customer service team before returning the product.
And pls do not throw the original box(es) if you have not finished assembling or confirmed no quality issues.
Length of return period:
Items can be returned within 30 days of purchase.In the meanwhile, everything you purchased from us comes with a one-year warranty.
Who is responsible for the return shipping fee:
We will cover the return shipping fees if:
1. Your item has a manufacturing defect in its materials or workmanship. For example, torn wicker or misaligned screw holes. We will send you a prepaid shipping label after photos are sent.
2.Your item has been damaged in transit. For example, glass is broken or wicker is damaged. We will send you a prepaid shipping label after photos are sent.
3.You receive the wrong box(es) due to a warehouse error. We will send you a prepaid shipping label after photos are sent of the wrong SKU numbers on the outer box(es).
4. One or more boxes are lost in transit. We will send you a prepaid shipping label if you no longer want the item.

Return Request

In order to get a full refund as described in this return policy, all items must be:
(1) In a brand new/unused condition, please provide photos before and after packaging.
(2) When returning, all accessories and parts are firmly packed in all original packaging.
If your return does not meet the requirements, you may not get a full refund.
When will I be refunded?The refund is released once the goods have been returned to our warehouse.What if the product is damaged/defective outside of the valid return period?We want you to be a happy customer.
Please reach out to us by email and we will come up with a solution to make sure you are satisfied.