ARM Cortex™-M0

32-BIT MICROCONTROLLER

Nu-LB-Mini51 User Manual

For NuMicro™ Mini51 Series

The information described in this document is the exclusive intellectual property of Nuvoton Technology Corporation and shall not be reproduced without permission from Nuvoton.

Nuvoton is providing this document only for reference purposes of NuMicro™ microcontroller based system design. Nuvoton assumes no responsibility for errors or omissions.

All data and specifications are subject to change without notice.

For additional information or questions, please contact: Nuvoton Technology Corporation.

Publication Release Date: Nov. 30, 2011
Revision V1.0

Downloaded from Arrow.com.

1 Overview 3

2 Nu-LB-Mini51 Introduction 3

2.1 Functional Block of Nu -LB-Mini51 4
2.2 Pin Assignment for Extended Connector 5

3 How to Start Nu-LB-Mini51 on the Keil µVision® IDE 6

3.1 Keil uVision® IDE Software Download and Install 6
3.2 Nuvoton Nu-Link Driver Download and Install 6
3.3 Hardware Setup 6
3.4 Smpl_StartKit Example Program 7

4 How to Start Nu-LB-Mini51 on the IAR Embedded Workbench 8

4.1 IAR Embedded Workbench Software Download and Install 8
4.2 Nuvoton Nu-Link Driver Download and Install 8
4.3 Hardware Setup 8
4.4 Smpl_StartKit Example Program 9

5 Nu-LB-Mini51 Schematic 10

6 Download NuMicro™ Family Related Files from Nuvoton Company 12

6.1 To Download NuMicro™ Nu-Link Driver for Keil RVMDK 12
6.2 To Download NuMicro™ Nu-Link Driver for IAR EWARM 13
6.3 To Download NuMicro™ Mini51 Series BSP Software Library 14

7 Revision History 15

Publication Release Date: Nov. 30, 2011
Revision V1.0

Downloaded from Arrow.com.

1 Overview

Nu-LB-Mini51 is the specific development tool for NuMicro Mini51 series. Users can use Nu-LB-Mini51 to learn easily how to display information, store date, communicate with PC and interact with human through Mini51 series. Besides, it also integrates ICE controller called Nu-Link-Me and users do not need other additional ICE or debug equipments.

2 Nu-LB-Mini51 Introduction

Nu-LB-Mini51 uses the Mini54LAN as the target microcontroller and includes rich functional blocks on board. Figure 2-1 is the positive and negative Nu-LB-Mini51. The positive Nu-LB-Mini51 includes main chip (Mini54LAN), INT key, reset key, variable resistance, RGB LED, 8 LEDs, 128x64 Dot Matrix LCD and RS232 interface. The negative Nu-LB-Mini51 includes EEPROM, Flash and ICE controller called Nu-Link-Me.

Nu-LB-Mini51 is similar to other development boards. Users can use the functional blocks connected with Mini54LAN to develop and verify applications to emulate the real behavior. The on board chip covers Mini51 series features. The Nu-LB-Mini51 can be a real system controller to design users' target systems.

Nu-Link-Me is a Debug Adaptor. **The Nu-Link-Me Debug Adaptor connects your PC's USB port to your target system (via Serial Wired Debug Port) and allows you to program and debug embedded programs on the target hardware.** To use Nu-Link-Me Debug adaptor with IAR or Keil, please refer to "Nuvoton NuMicro™ IAR ICE driver user manual "or Nuvoton NuMicro™ Keil ICE driver user manual" in detail. These two documents will be stored in the local hard disk when the user installs each driver.

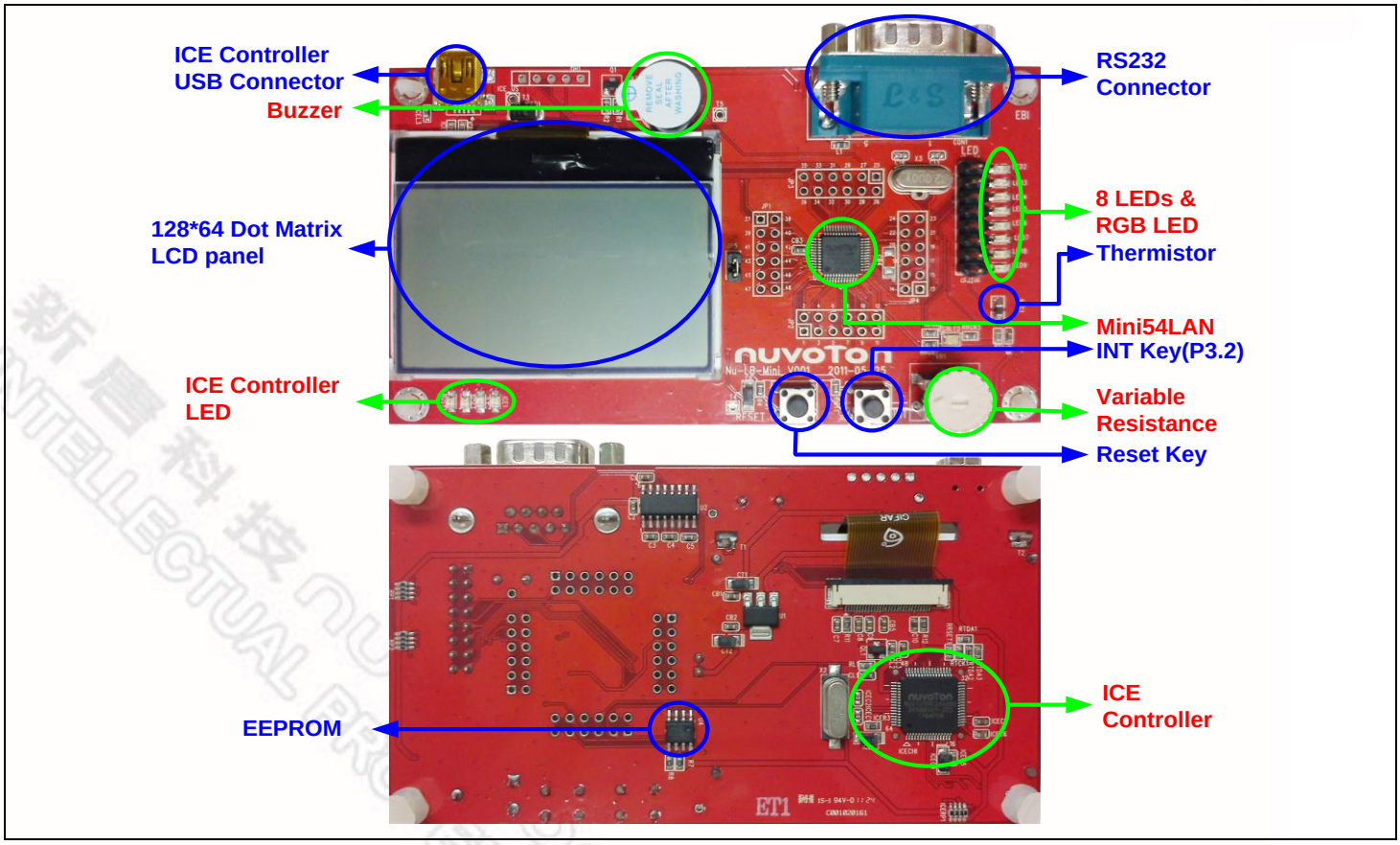

Figure 2-1 Nu-LB-Mini51

Downloaded from Arrow.com.

2.1 Functional Block of Nu -LB-Mini51

Nu-LB-Mini51 provides the rich functional blocks connected with Mini54LAN to display information, communicate with PC, store data and interact with human. Users can follow the pin assignment at Table 2-1 to control every functional block.

Functional Block	Pin assignment	Pin Function Description
ICE controller(Nu-Link-Me)	ICE_CLK ICE_DATA	SWD interface
Reset Key	/RST	Reset
INT Key	P3.2	INT0
Variable Resistance	P5.3	AIN0
Thermistor	P1.0	AIN1
Buzzer	P2.5	PWM3
GRB LED	P2.2 P2.3 P2.4	PWM0 PWM1 PWM2
8 LEDs	P3.1 P3.6 P5.2 P2.6 P1.2 P1.3 P1.4 P1.5	LED0 LED1 LED2 LED3 LED4 LED5 LED6 LED7
EEPROM	P3.4 P3.5	I2C SDA I2C SCL
Black Dot Matrix LCD Panel	P0.4 P0.5 P0.6 P0.7 P5.4	SPI_SS5 SPI_MOSI LCM_RST/SPI_MISO SPI_CLK LCM_LED

Table 2-1 Functional Block for Nu-LB-Mini51

Publication Release Date: Nov. 30, 2011
Revision V1.0

Downloaded from Arrow.com.

2.2 Pin Assignment for Extended Connector

Nu-LB-Mini51 provides Mini54LAN on board and the extended connector for LQFP-48 pin. Table 2-2 is the pin assignment for Mini54LAN.

Pin No	Pin Name	Pin No	Pin Name
01	NC	25	P2.5, PWM3
02	P1.5, AIN5, CPP0	26	P2.6, PWM4, CPO1
03	/RESET	27	NC
04	P3.0, AIN6, CPN1	28	NC
05	AVSS	29	P4.6, ICE_CLK
06	P5.4	30	P4.7, ICE_DAT
07	P3.1, AIN7, CPP1	31	NC
08	P3.2, INT0, STADC, T0EX	32	P0.7, SPICLK
09	P3.4, T0, SDA	33	P0.6, MISO
10	P3.5, T1, SCL	34	P0.5, MOSI
11	NC	35	P0.4, SPISS, PWM5
12	NC	36	NC
13	NC	37	P0.1, RTSn, RX, SPISS
14	P3.6, CKO, T1EX, CPO0	38	P0.0, CTSn, TX
15	P5.1, XTAL2	39	NC
16	P5.0, XTAL 1	40	NC
17	VSS	41	P5.3, AIN0
18	LDO_CAP	42	VDD
19	P5.5	43	AVDD
20	P5.2, INT1	44	P1.0, AIN1
21	NC	45	P1.2, AIN2, RX
22	P2.2, PWM0	46	P1.3, AIN3, TX
23	P2.3, PWM1	47	P1.4, AIN4, CPN0
24	P2.4, PWM2	48	NC

Table 2-2 Pin Assignment for Mini54LAN

Downloaded from Arrow.com.

3 How to Start Nu-LB-Mini51 on the Keil µVision® IDE

3.1 Keil uVision® IDE Software Download and Install

Please visit the Keil company website (http://www.keil.com) to download the Keil µVision® IDE and install the RVMDK.

3.2 Nuvoton Nu-Link Driver Download and Install

Please visit the Nuvoton company NuMicro™ website (http://www.nuvoton.com/NuMicro) to download "NuMicro™ Keil µVision® IDE driver" file. Please refer to Chapter 6.1 for the detail download flow. When the Nu-Link driver has been well downloaded, please unzip the file and execute the "Nu-Link_Keil_Driver.exe" to install the driver.

3.3 Hardware Setup

The hardware setup is shown as Figure 3-1

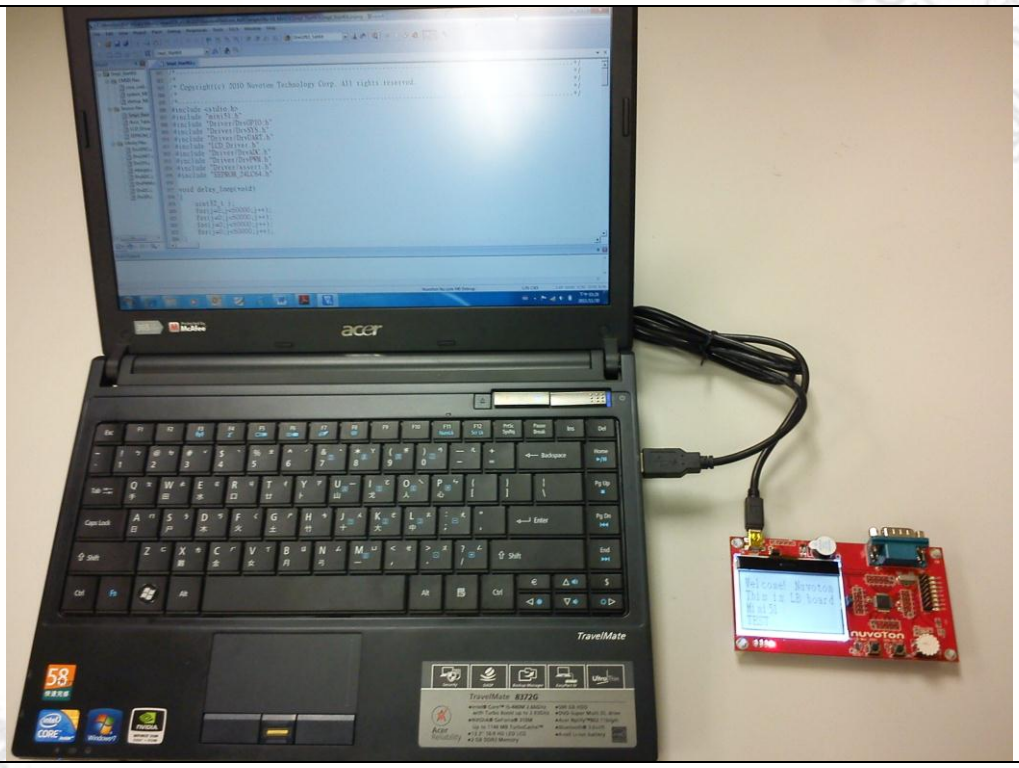

Figure 3-1 Nu-LB-Mini51 Hardware Setup

Downloaded from Arrow.com.

3.4 Smpl_StartKit Example Program

This example demonstrates the ease of downloading and debugging an application on a Nu-LB-Mini51 board.
It can be found on Figure 3-2 list directory and downloaded from Nuvoton NuMicro™ website following on Chapter 6.3.

Directory	C:\Nuvoton\BSP Library\Mini51SeriesBSP_v1.00.002\NuvotonPlatform_Keil\Sample\Nu-LB_Mini51\Smpl_StartKit
Project File	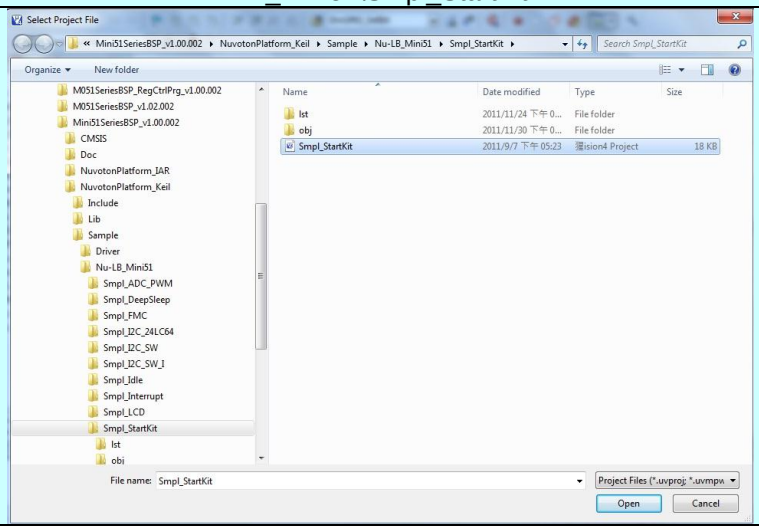

Figure 3-2 Smpl_StartKit Example Directory

To use this example:
The LCD will display the result of ADC on the Nu-LB-Mini51 board.

- **Start µVision®**
- **Project-Open**
  Open the Smpl_StartKit.uvproj project file
- **Project - Build**
  Compile and link the Smpl_StartKit application
- **Flash – Download**
  Program the application code into on-chip Flash ROM
- **Start debug mode**
  Using the debugger commands, you may:
  - Review variables in the watch window
  - Single step through code
  - Reset the device
  - Run the application

Publication Release Date: Nov. 30, 2011
Revision V1.0

Downloaded from Arrow.com.

4 How to Start Nu-LB-Mini51 on the IAR Embedded Workbench

4.1 IAR Embedded Workbench Software Download and Install

Please connect to IAR company website (http://www.iar.com) to download the IAR Embedded Workbench and install the EWARM.

4.2 Nuvoton Nu-Link Driver Download and Install

Please connect to the Nuvoton Company NuMicro™ website (http://www.nuvoton.com/NuMicro) to download "NuMicro™ IAR ICE driver user manual" file. Please refer to Chapter 6.2 for the detail download flow. When the Nu-Link driver has been well downloaded, please unzip the file and execute the "Nu-Link_IAR_Driver.exe" to install the driver.

4.3 Hardware Setup

The hardware setup is shown as Figure 4-1

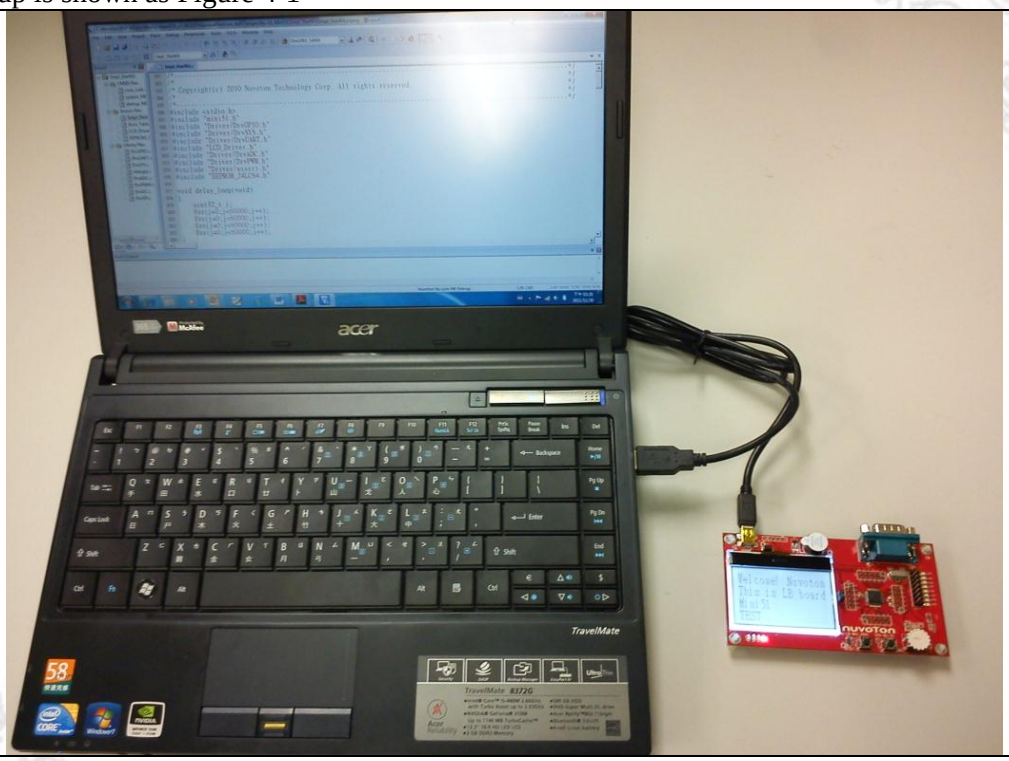

Figure 4-1 Nu-LB-Mini51 Hardware Setup

Downloaded from Arrow.com.

4.4 Smpl_StartKit Example Program

This example demonstrates the ease of downloading and debugging an application on a Nu-LB-Mini51 board.
It can be found on Figure 4-2 list directory and download from Nuvoton NuMicro™ website following on Chapter 6.3.

Directory	C:\Nuvoton\BSP Library\Mini51SeriesBSP_v1.00.002\NuvotonPlatform_IAR\Sample\Nu-LB_Mini51\Smpl_StartKit
Project File	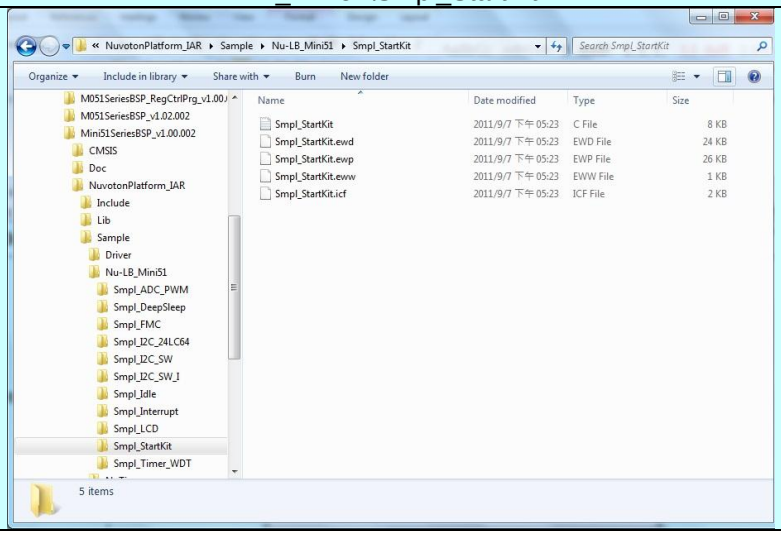

Figure 4-2 Smpl_StartKit Example Directory

To use this example:
The LCD will display the result of ADC on the Nu-LB-M051 board.

- **Start IAR Embedded Workbench**
- **File-Open-Workspace**
  Open the Smpl_StartKit.eww workspace file
- **Project - Make**
  Compile and link the Smpl_StartKit application
- **Project – Download and Debug**
  Program the application code into on-chip Flash ROM.
  - Single step through code
  - Reset the device
  - Run the application

Publication Release Date: Nov. 30, 2011
Revision V1.0

Downloaded from Arrow.com.

5 Nu-LB-Mini51 Schematic

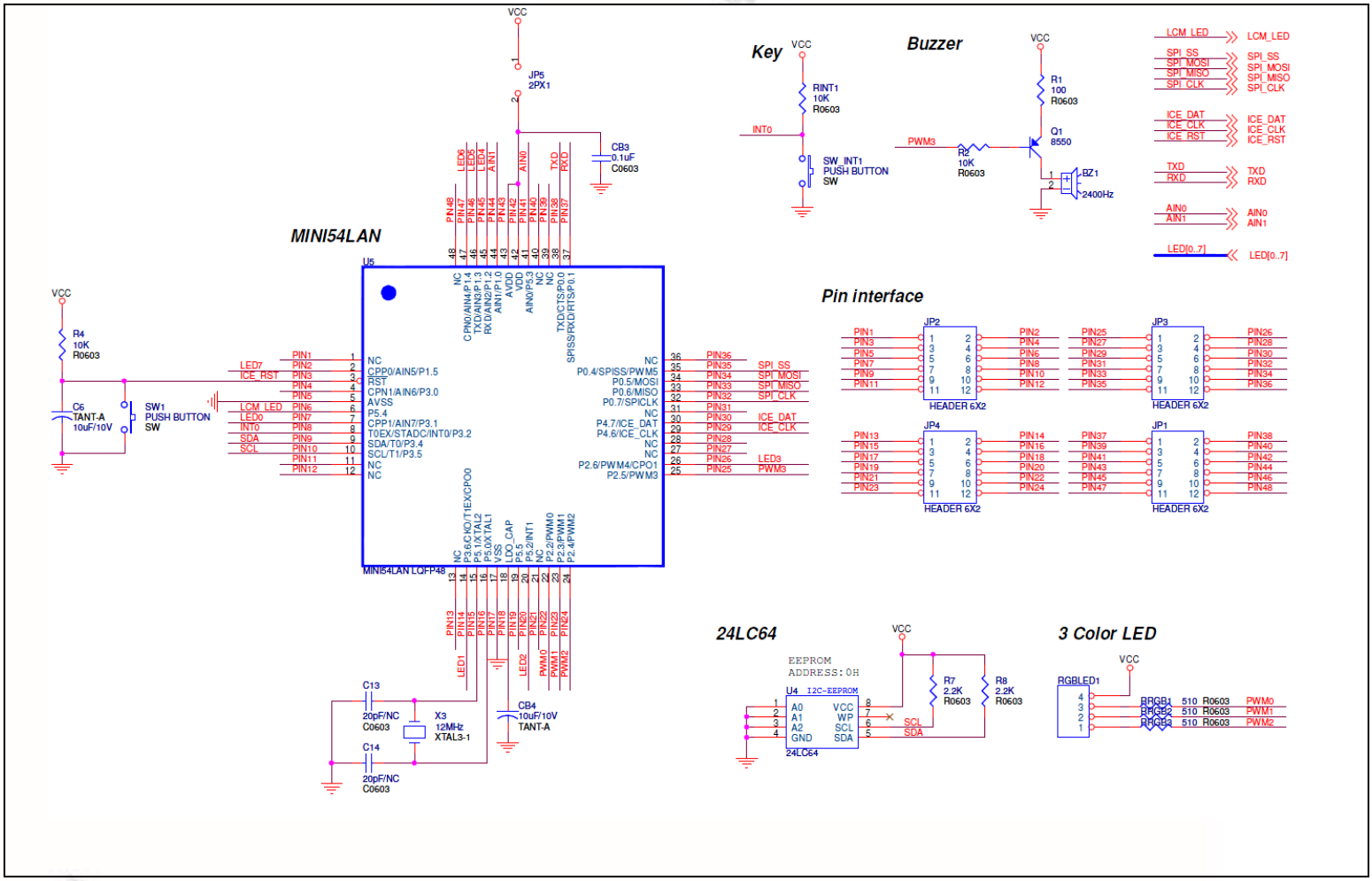

新唐科技 nuvoton INTELLECTUAL PROPERTY

Publication Release Date: Nov. 30, 2011
Revision V1.0

Downloaded from Arrow.com.

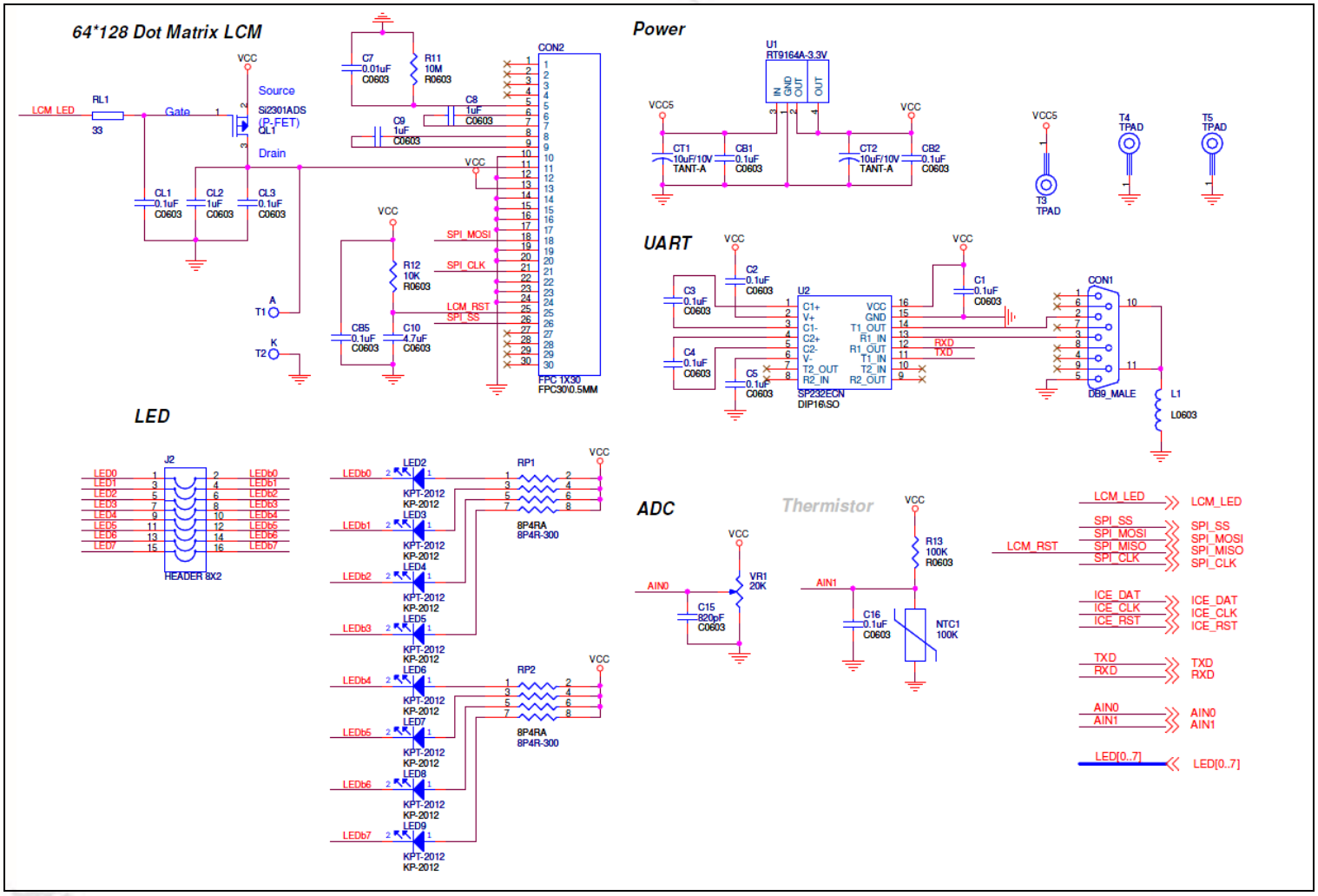

新唐科技 nuvoton INTELLECTUAL PROPERTY

Publication Release Date: Nov. 30, 2011
Revision V1.0

Downloaded from Arrow.com.

6 Download NuMicro™ Family Related Files from Nuvoton Company

6.1 To Download NuMicro™ Nu-Link Driver for Keil RVMDK

Step.1	To connect to the Nuvoton NuMicro™ Website: **http://www.nuvoton.com/NuMicro**
Step.2	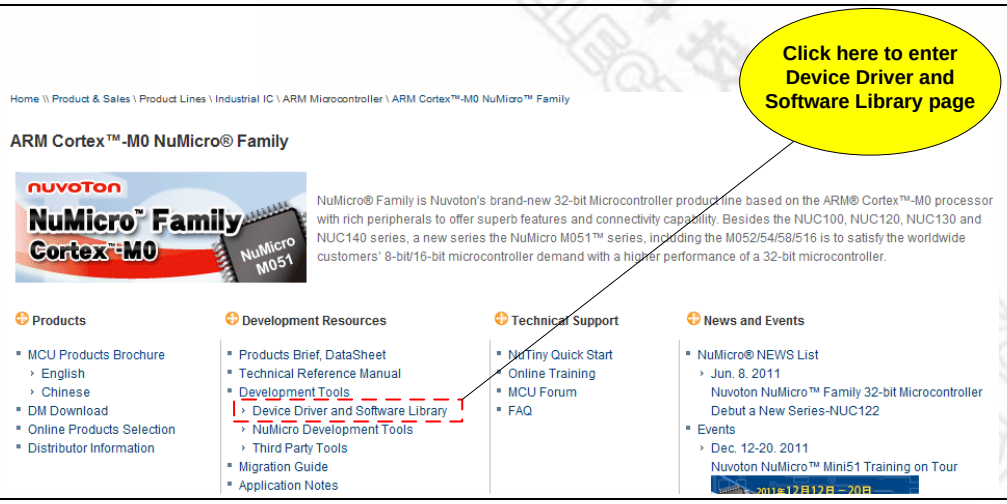
Step.3	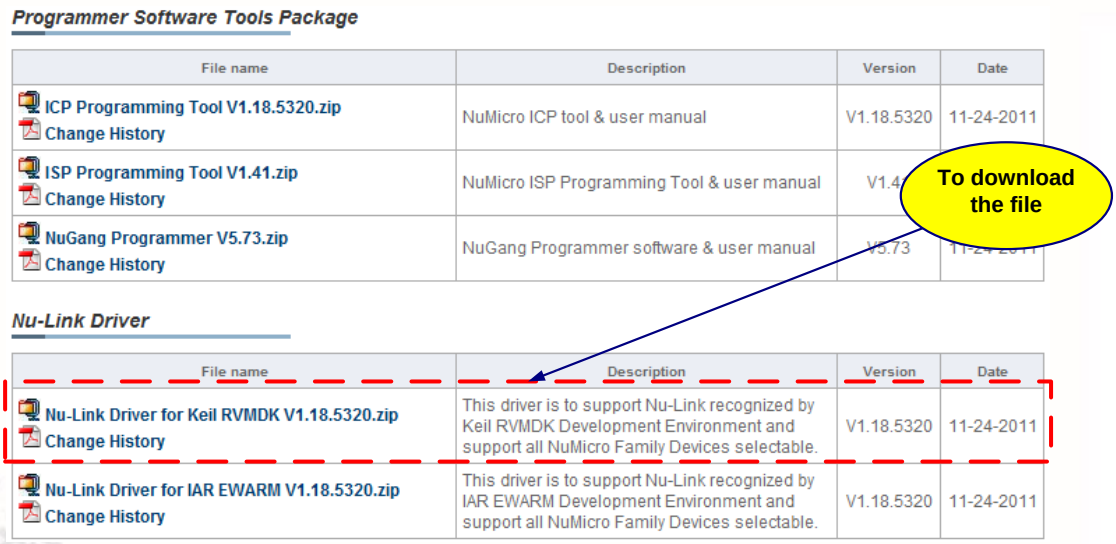
Step.4	To download the **NuMicro™ Nu-Link Driver for Keil RVMDK**

Publication Release Date: Nov. 30, 2011
Revision V1.0

Downloaded from Arrow.com.

6.2 To Download NuMicro™ Nu-Link Driver for IAR EWARM

Step.1	To connect to the Nuvoton NuMicro™ Website: **http://www.nuvoton.com/NuMicro**
Step.2	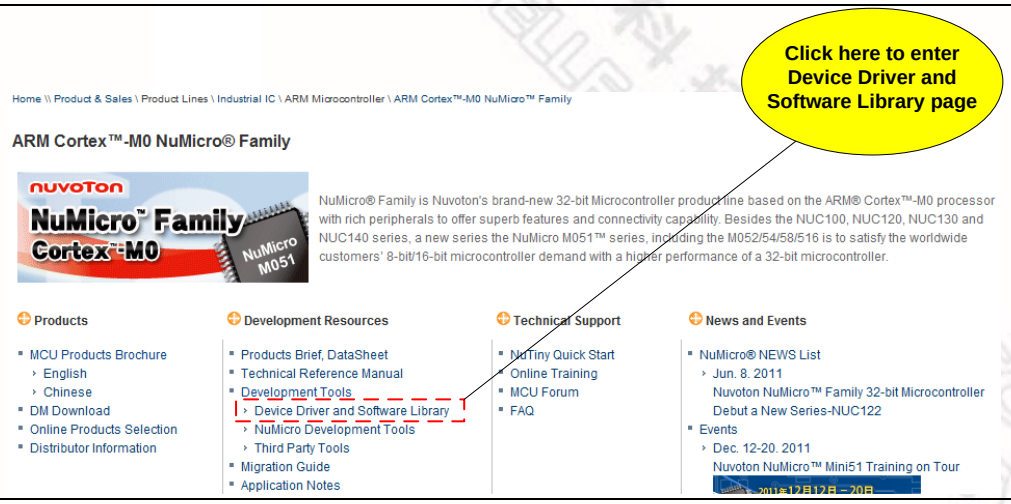
Step.3	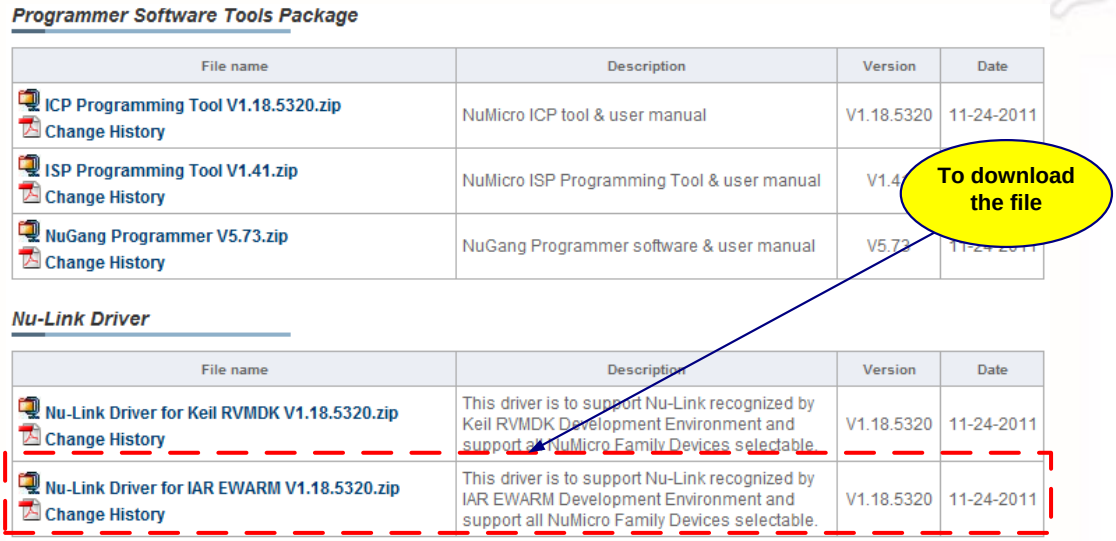
Step.4	To download the **NuMicro™ Nu-Link Driver for IAR EWARM**

Downloaded from Arrow.com.

6.3 To Download NuMicro™ Mini51 Series BSP Software Library

Step.1	To connect to the Nuvoton NuMicro™ Website: **http://www.nuvoton.com/NuMicro**
Step.2	
Step.3	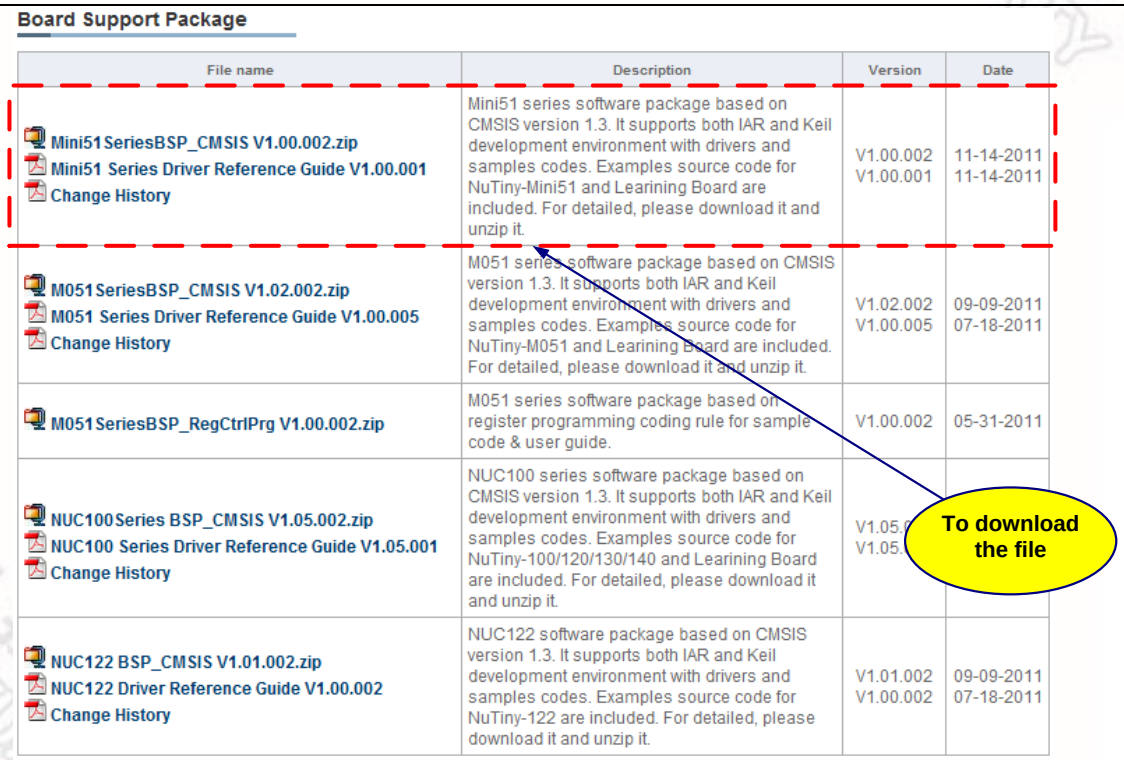 File name / Description / Version / Date Mini51SeriesBSP_CMSIS V1.00.002.zip Mini51 Series Driver Reference Guide V1.00.001 Change History Mini51 series software package based on CMSIS version 1.3. It supports both IAR and Keil development environment with drivers and samples codes. Examples source code for NuTiny-Mini51 and Learining Board are included. For detailed, please download it and unzip it. V1.00.002 V1.00.001 11-14-2011 11-14-2011 M051SeriesBSP_CMSIS V1.02.002.zip M051 Series Driver Reference Guide V1.00.005 Change History M051 series software package based on CMSIS version 1.3. It supports both IAR and Keil development environment with drivers and samples codes. Examples source code for NuTiny-M051 and Learining Board are included. For detailed, please download it and unzip it. V1.02.002 V1.00.005 09-09-2011 07-18-2011 M051SeriesBSP_RegCtrlPrg V1.00.002.zip M051 series software package based on register programming coding rule for sample code & user guide. V1.00.002 05-31-2011 NUC100Series BSP_CMSIS V1.05.002.zip NUC100 Series Driver Reference Guide V1.05.001 Change History NUC100 series software package based on CMSIS version 1.3. It supports both IAR and Keil development environment with drivers and samples codes. Examples source code for NuTiny-100/120/130/140 and Learining Board are included. For detailed, please download it and unzip it. NUC122 BSP_CMSIS V1.01.002.zip NUC122 Driver Reference Guide V1.00.002 Change History NUC122 software package based on CMSIS version 1.3. It supports both IAR and Keil development environment with drivers and samples codes. Examples source code for NuTiny-122 are included. For detailed, please download it and unzip it. V1.01.002 V1.00.002 09-09-2011 07-18-2011
Step.4	To download the **NuMicro™ Mini51 SeriesBSP_CMSIS** software library

Publication Release Date: Nov. 30, 2011
Revision V1.0

Downloaded from Arrow.com.

7 Revision History

Version	Date	Page	Description
1.0	Nov. 30, 2011	--	Initial Release

Important Notice

Nuvoton products are not designed, intended, authorized or warranted for use as components in systems or equipment intended for surgical implantation, atomic energy control instruments, airplane or spaceship instruments, transportation instruments, traffic signal instruments, combustion control instruments, or for other applications intended to support or sustain life. Further more, Nuvoton products are not intended for applications wherein failure of Nuvoton products could result or lead to a situation wherein personal injury, death or severe property or environmental damage could occur.

Nuvoton customers using or selling these products for use in such applications do so at their own risk and agree to fully indemnify Nuvoton for any damages resulting from such improper use or sales.

Please note that all data and specifications are subject to change without notice. All the trademarks of products and companies mentioned in this datasheet belong to their respective owners.

Downloaded from Arrow.com.