WORX®

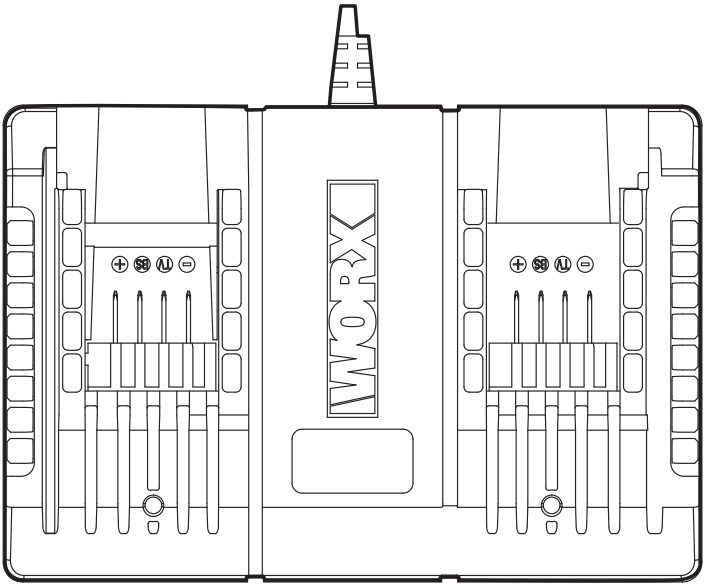

Battery Charger	**EN**	**P04**
Chargeur	**F**	**P08**
Cargador	**ES**	**P12**

HELPLINE NUMBER
NUMÉRO DU SERVICE D'ASSISTANCE
NÚMERO DE LÍNEA DE AYUDA
1-866-354-WORX (9679)

WA3875

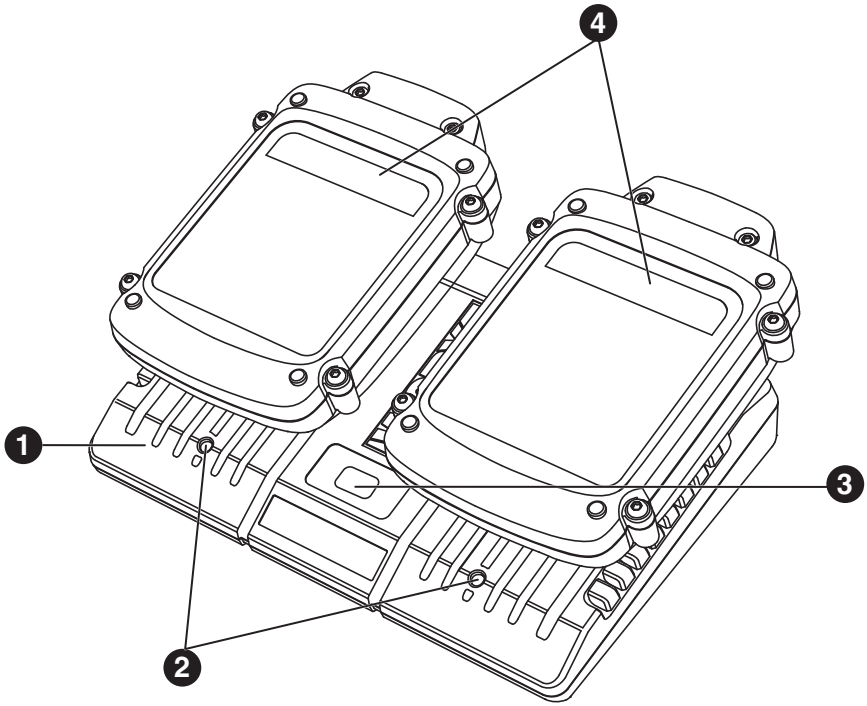
4
1
3
2

1.	CHARGER
2.	CHARGE INDICATOR LIGHTS
3.	CHARGING MODE SELECTOR
4.	BATTERY PACKS*

***Not all the accessories illustrated or described are included in standard delivery.**

TECHNICAL DATA

Rated Input voltage		120V~60Hz
Output voltage		20V ⎓
Charging current		2A
Rated Input power		50W
Charge battery		Li-Ion
Charging time (approx.)		
Battery pack	2.0 Ah(1pc)	Approx. 1hr
	2.0 Ah(2pcs)	Approx. 2hr
	4.0 Ah(1pc)	Approx. 2hr
	4.0 Ah(2pcs)	Approx. 4hr
Protection class		⧈/II
Machine weight		1.10lbs (0.5kg)

For the technical data of the types, the number of cells and the rated capacity of the batteries that can be charged, please refer the nameplate of the battery pack supplied by WORX.

We recommend that you purchase your accessories listed in the above list from the same store that sold you the tool. Refer to the accessory packaging for further details. Store personnel can assist you and offer advice.

PRODUCT SAFETY SAFETY INSTRUCTIONS

WARNING: This product may contain lead, phthalate or other chemicals known to the State of California to cause cancer, birth defects and other reproductive harm. Wash your hands after use.

Information for radiated emission
This device complies with Canadian ICES-001.
This device complies with Part 15 of the FCC Rules. Operation is subject to the following two conditions:
(1) this device may not cause harmful interference, and
(2) this device must accept any interference received, including interference that may cause undesired operation.
Warning: Changes or modifications to this unit not expressly approved by the party responsible for compliance could void the user's authority to operate the equipment.
- NOTE: This equipment has been tested and found to comply with the limits for a Class B digital device, pursuant to Part 15 of the FCC Rules.
These limits are designed to provide reasonable protection against harmful interference in a residential installation. This equipment generates, uses and can radiate radio frequency energy and, if not installed and used in accordance with the instructions, may cause harmful interference to radio communications.
However, there is no guarantee that interference will not occur in a particular installation. If this equipment does cause harmful interference to radio or television reception, which can be determined by turning the equipment off and on, the user is encouraged to try to correct the interference by one or more of the following measures:

- Reorient or relocate the receiving antenna.
- Increase the separation between the equipment and receiver.
- Connect the equipment into an outlet on a circuit different from that to which the receiver is connected.
- Consult the dealer or an experienced radio/TV technician for help.

CHARGING PROCEDURE

NOTE: Before using the tool, read the instruction book carefully.

CHARGING INSTRUCTIONS

1. CHARGING YOUR BATTERY PACK

This charger is designed to charge one or two battery packs together or in a row.

WARNING:
The charger and battery pack are specifically designed to work together so do not attempt to use any other devices to charge. Never insert or allow metallic objects into your charger or battery pack connections because an electrical failure and hazard will occur.

2. BEFORE USING YOUR CORDLESS TOOL

Your battery pack is UNCHARGED and you must charge once before use.

3. HOW TO CHARGE YOUR BATTERY PACK

CHARGING PROCEDURE

1) Plug the charger into an appropriate outlet.
2) Slide one battery pack or two battery packs into the charger. Normally, the relevant indication lights (2) will flash in green color showing the battery is being charged.
3) This is a dual-port charger and it has 2 charging modes, Dual-Charging (default) and 1-by-1 charging.

3.1 Dual-charging mode, for 2 battery packs to be charged at the same time, the charger charges both battery packs simultaneously.

3.2 1-by-1 charging mode, for reducing waiting time to complete 1 battery pack charging first. The charger charges the higher residual capacity battery pack first until fully charged then the charger charges the other battery.

4) Either of the two charging modes can be selected by pressing Charging Mode Selector (3).

WARNING:
When battery charge runs out after continuous use or exposure to direct sunlight or heat, allow time for the battery to cool down before re-charging to achieve the full charge.

CHARGING INDICATOR LIGHTS

This charger is designed to detect problems that can rise with battery packs. Indicator lights indicate problems (see table below). If this occurs, insert a new battery pack to check. If the new battery pack charges correctly, then the original pack is defective and should be returned to a service center or recycling service center. If the new battery pack displays the same problem as the original battery pack, have the charger tested at an authorized service center.

Light	ON/OFF flash	Status
Green on	———	Fully Charged
Green flash	- - - - - -	Charging
Red on	———	Defective Battery
Red flash	- - - - -	Battery Temperature Protection The temperature of battery pack is less than 32°F (0°C) or more than 113°F(45°C).

DEFECTIVE BATTERY PACKS

This charger will detect a defective battery pack. When a defective battery pack is inserted into the charger, the charger will try to repair it. This process will last about 30mins (the light will be green and flash). If the repair is successful, the charger will automatically begin to charge the battery pack to the highest capacity possible (the light will be green and flash). If the light becomes solid red, then the battery pack is dead, and should be returned to a service center or recycling service center.

NOTE: Repaired battery packs are still usable but should not be expected to perform as much work as new battery packs.

BATTERY TEMPERATURE PROTECTION

This charger has a battery temperature protection feature. When the charger detects a battery pack that is too hot or cold (the light will be red and flash), it automatically activates the protection circuit, and suspends charging until the battery pack has reached the correct temperature. The charging process will then automatically begin (the light will be green and flash). This feature ensures maximum battery life.

LEAVING THE BATTERY PACK IN THE CHARGER

If a fully charged battery pack is left in the charger, the light will remain green. The battery pack will remain charging with a maintenance trickle current.

IMPORTANT CHARGING NOTES:

1. For a new battery pack or a battery pack that has been in storage for a long period, please recharge it before use. If you want to store the battery pack for a long time, please fully charge the battery pack to ensure maximum battery life.
2. Longer life and better performance can be obtained if the battery pack is charged when the air temperature is between 65 et 75°F (18°-24°C). Do not charge the battery pack in air temperatures below 40°F (4.5°C), or above 105°F (40.5° C). This is important as it can prevent serious damage to the battery pack.
3. Never freeze your charger or immerse charger in water or any other liquid.
4. When the battery pack fails to produce sufficient power on jobs that were previously done easily, please recharge your battery pack, do not

continue using it under this condition. You may charge a partially used pack whenever you desire with no adverse affect on the battery pack.

5. When charging it is normal that the charger and battery pack may become warm to touch.
6. If the battery pack does not charge properly:

a. Check current at power outlet by plugging in another appliance.
b. Plug and unplug to check whether the charger is ok
c. Check whether the battery pack has been damaged
d. Move the charger and battery pack to a location where the surrounding air temperature is approximately 65 et 75^{0}F (18^0-24^0 C).
e. If the charging problem persists, take the tool, battery pack and charger to an authorized service center.
f. Under certain conditions, when the charger is plugged into the power supply, the exposed charging contacts inside the charger can be shorted by foreign material. Foreign materials of a conductive nature such as metallic particles should be kept away from charger cavities. Always unplug the charger from the power supply when there is no battery pack in the charger or before attempting to clean.

PROBLEM SOLUTION

I CANNOT FIT THE BATTERY PACK INTO THE BATTERY CHARGER. WHY?

a) Check if the charger and the battery pack are specifically designed for working together.
b) The battery pack can be inserted into the charger only in one direction. Turn the battery pack around until it can be inserted into the slot, the indicator light should be green and flash when the battery pack is charging.

REASONS FOR DIFFERENT CHARGING TIMES

The charging time can be affected by many reasons which are not defects in your product.

a) If the battery pack is only partly discharged it may be re-charged in less than rated charging time.
b) If the battery pack and ambient temperature are very cold/hot, it may take longer to re-charge. Please find an appropriate environment with proper air temperature to start charging.
c) If the battery pack is very hot, remove battery pack from the charger and allow battery pack to cool first to ambient temperature and then recharging can be started.
d) Batteries of higher Amp Hour rating require more charging time.

MAINTENANCE

Remove the plug from the socket before carrying out any adjustment, servicing or maintenance.

Your battery charger requires no additional lubrication or maintenance. Never use water or chemical cleaners to clean your charger. Wipe clean with a dry cloth. Always store your charger in a dry place.

If the supply cord is damaged, it must be replaced by the manufacturer, its service agent or similarly qualified persons in order to avoid a hazard.

WORX

www.worx.com

Copyright © 2016, Positec. All Rights Reserved.
Copyright © 2016, Positec. Tous droits réservés.
© Derechos reservados 2016, Positec. Todos los derechos reservados.
AR03002503