2012-15 LEXUS RX- KNOB WIRING DIAGRAM

HAMILTON MOTOR COMPANY

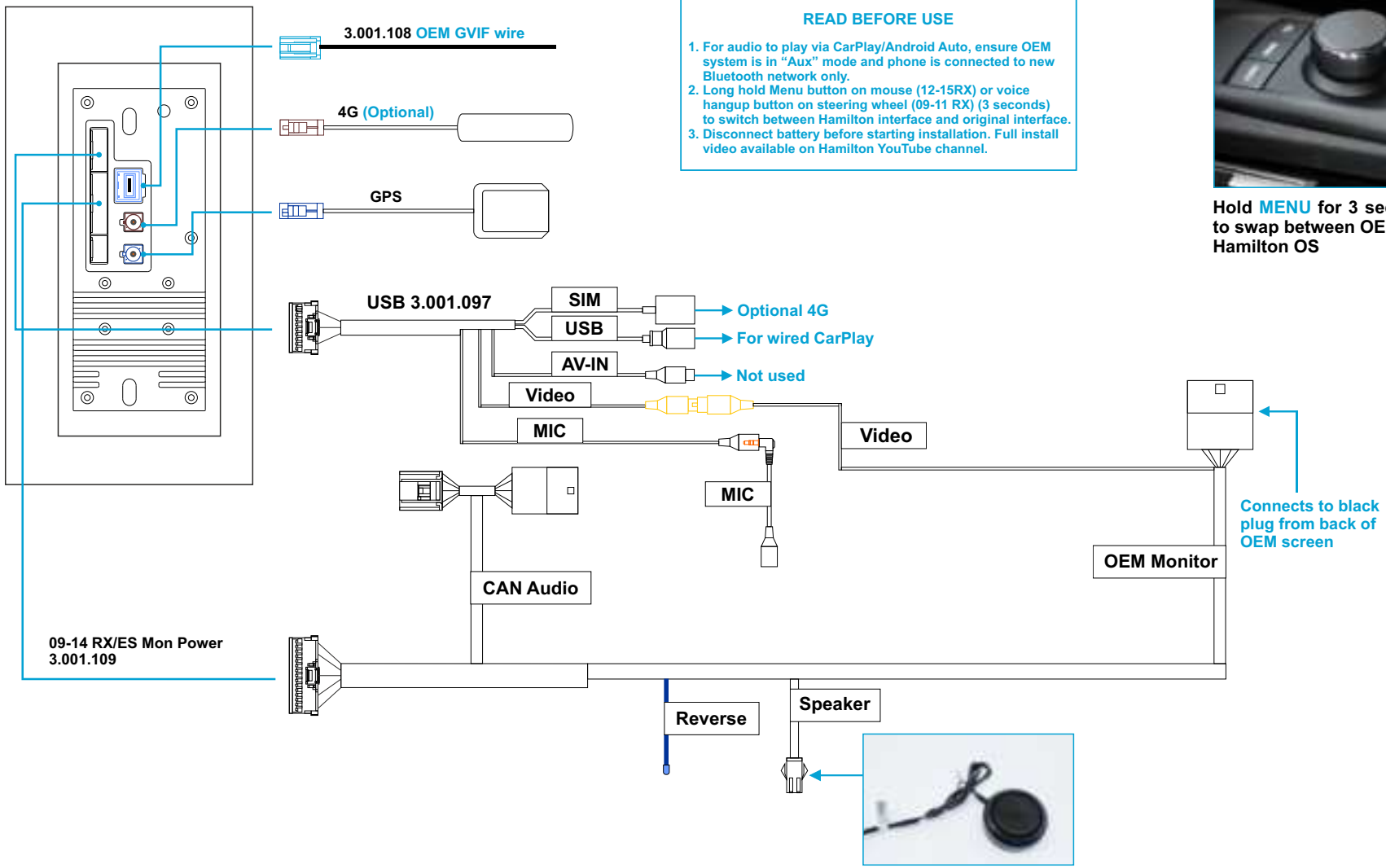

READ BEFORE USE

1. For audio to play via CarPlay/Android Auto, ensure OEM system is in "Aux" mode and phone is connected to new Bluetooth network only.
2. Long hold Menu button on mouse (12-15RX) or voice hangup button on steering wheel (09-11 RX) (3 seconds) to switch between Hamilton interface and original interface.
3. Disconnect battery before starting installation. Full install video available on Hamilton YouTube channel.

Hold MENU for 3 seconds to swap between OEM and Hamilton OS

support@hamiltonmotorcompany.com (919) 858-2890