13-15 LX/12-15 LC 200
WIRING DIAGRAM

HAMILTON MOTOR COMPANY

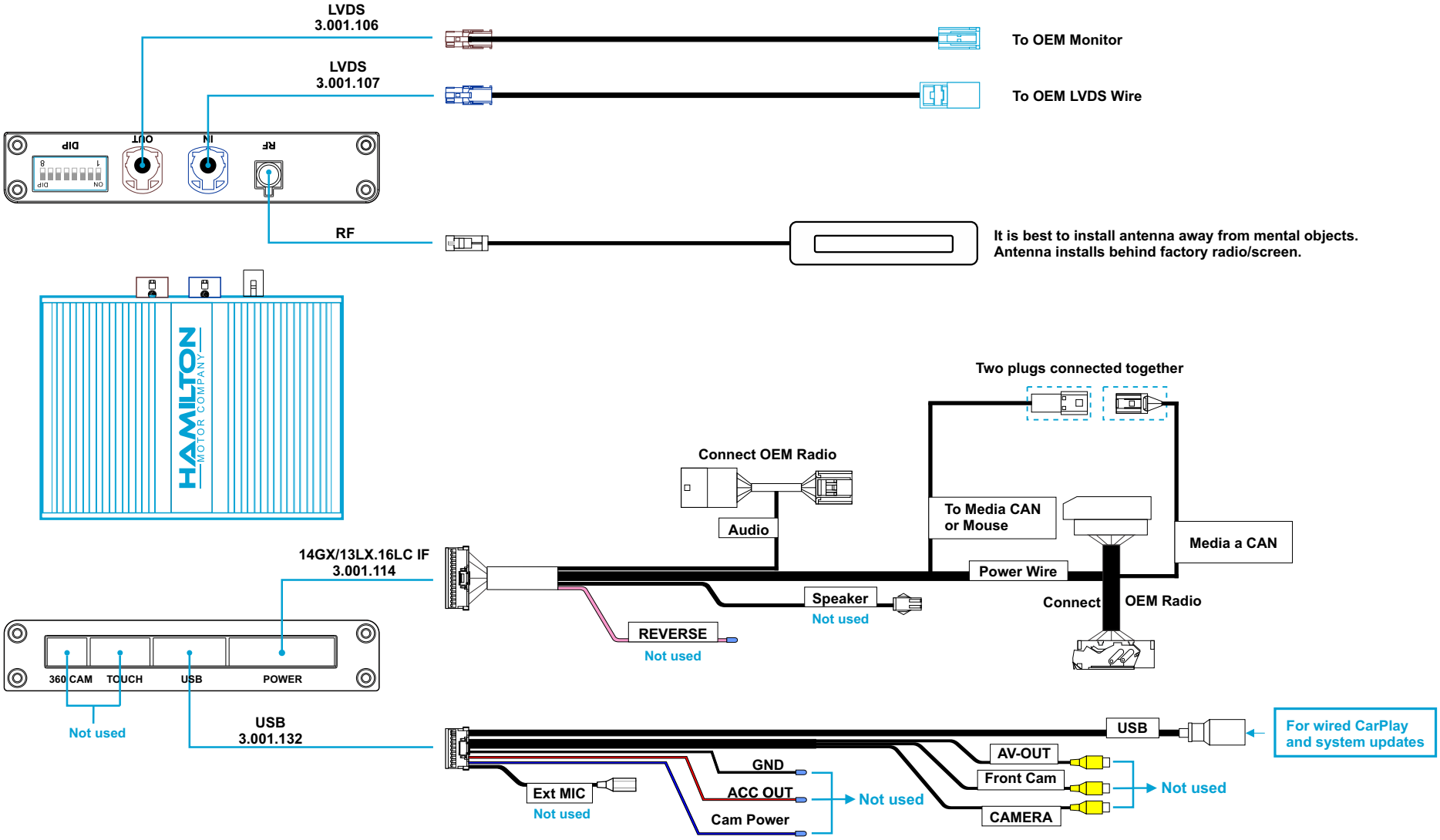

System will use factory microphone and camera by default

support@hamiltonmotorcompany.com (919) 858-2890