VEVOR

Affordable. Reliable. Home Improvement.

PLASTIC PATIO LOUNGE CHAIR USER MANUAL

Technical Support and E-Warranty Certificate
www.vevor.com/support

VEVOR
Affordable. Reliable. Home Improvement.

METAL PATIO LOUNGE CHAIR

MODEL: TY04-4/5/6（GRAY，BROWN，WHITE）



This is the original instruction, please read all manual instructions carefully before operating. VEVOR reserves a clear interpretation of our user manual. The appearance of the product shall be subject to the product you received. Please forgive us that we won't inform you again if there are any technology or software updates on our product.

	Warning-To reduce the risk of injury, user must read instructions manual carefully.

INSTRUCTIONS

Thank you very much for choosing this product. Please read all of the instructions before using it.The information will help you achieve the best possible results.

PLEASE NOTE! Drawings in this manual are for illustration purposes only and in some details may differ from the actual product.

- Our clear, easy-to-follow, step-by-step instructions will guide you through the project from start to finish.
- Do not skip any steps. It is of utmost importance to assemble all of the parts according to the directions..Be very careful when folding chair to avoid smashing your hands or fingers.
- Item identification: For ease of identification, all parts are labeled to correspond to the step number in which the part is used.

IMPORTANT:

- Read following instructions carefully before using the lounge chair.Keep fingers away from hinged area of the lounge chair.Please contact customer service if you have any problems or discover any missing parts.
- Use the lounge chair on a flat not-slippery surface only.
- Regularly check all the fittings. Tighten them if they are loose.

WARNING:

- Keep all children and pets away from assembly area. Children and pets should be supervised while the product is being assembled..The assembled product should be located at least 6 feet (2 m) from any obstruction such as fence, garage, house, overhanging branches, laundry lines or electrical wires.

- Some parts may contain sharp edges. Wear protective gloves if necessary during assembly.
- When assembling and using this product, basic safety precautions should always be followed to reduce the risk of personal injury and damage to equipment.
- Check all bolts for tightness before and during usage.

SAVE THESE INSTRUCTIONS

TECHNICAL PARAMETERS

Model	**TY04-4/5/6**		
Type	Plastic Patio Lounge Chair		
Load Bearing	400 lbs		
Color	Gray	Brown	White
Material	HDPE		
Backrest adjustment gear	5		

PARTS LIST

Item No.	Reference Image	Qty
A	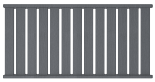 SEAT	X 1
B	 BACKREST	X 1
C	 BACK LEFT LEG	X 1
D	 BACK RIGHT LEG	X 1
E	 FRONT LEG	X 2

Item No.	Reference Image	Qty
F	 RAIL	X 4
G	 RIGHT ARM	X 1
H	 LEFT ARM	X 1
I	 SPPORT FRAME	X 1
J	 CUP BOTTOM	X 1

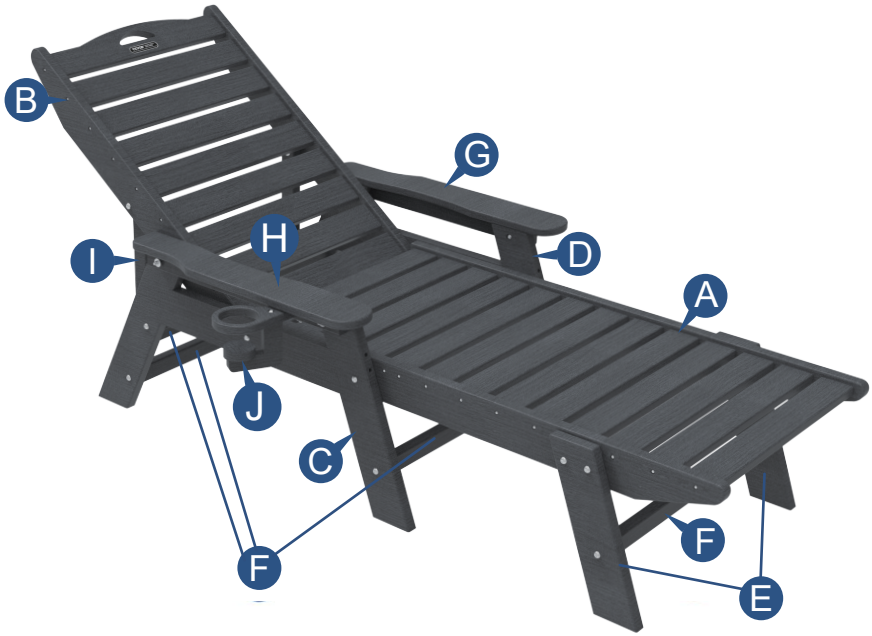

Item No.	Reference Image	Qty
1	M6x55mm 	X 4
2	M6x60mm 	X 12
3	M6x50mm 	X 8
4	M6x40mm 	X 1

Item No.	Reference Image	Qty
5	M6 NUT 	X 16
6	M6×WASHER 	X 16
7	T WRENCH 	X 1
8	WRENCH 	X 1

ASSEMBLY

STEP 1



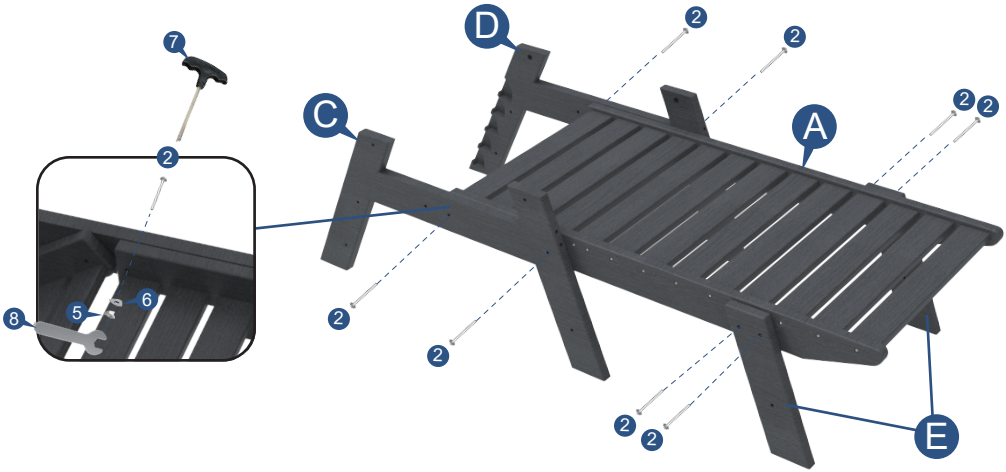

STEP 2

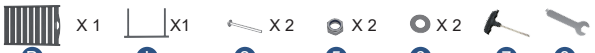

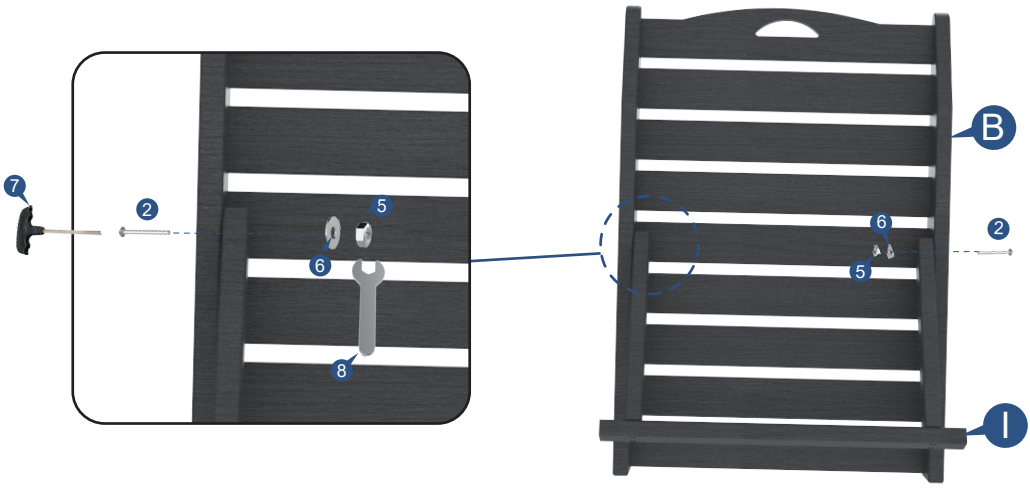

*Repeat the same operation on the other side of the chair.

STEP 3



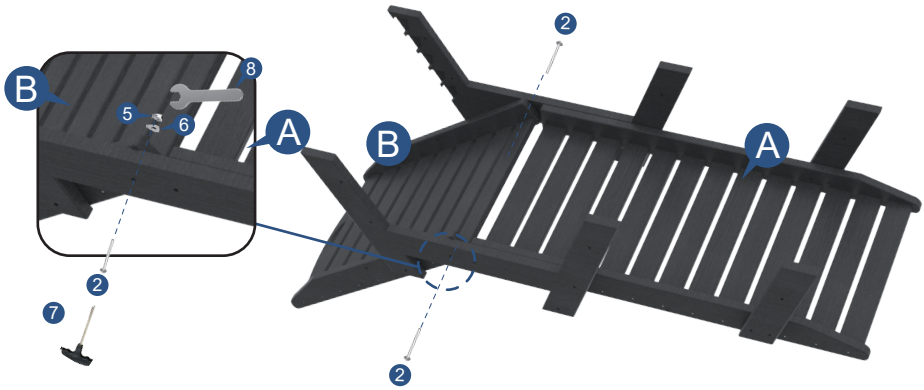

*Repeat the same operation on the other side of the chair.

STEP 4

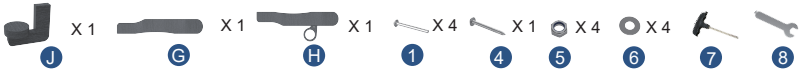

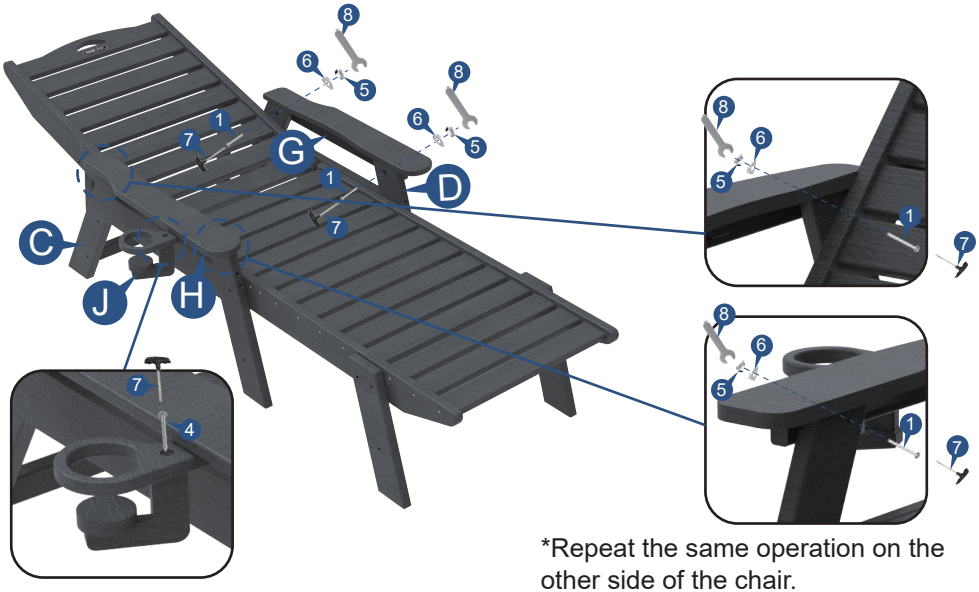

*Repeat the same operation on the other side of the chair.

STEP 5



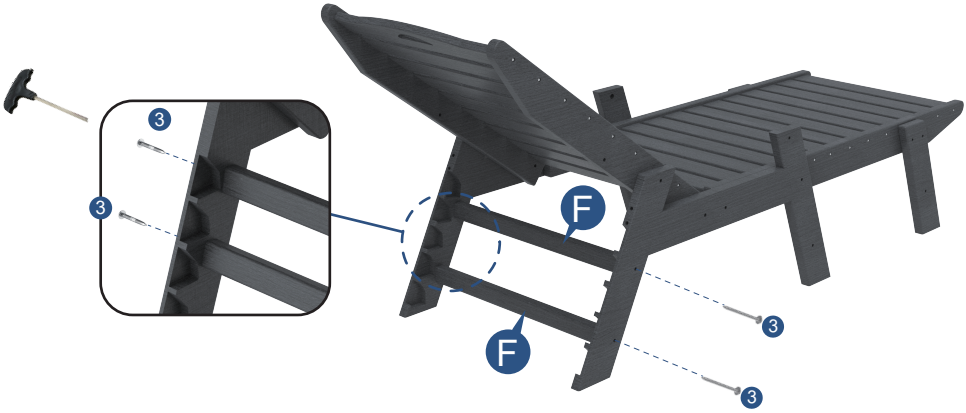

*Repeat the same operation on the other side of the chair.

STEP 6



*Repeat the same operation on the other side of the chair.

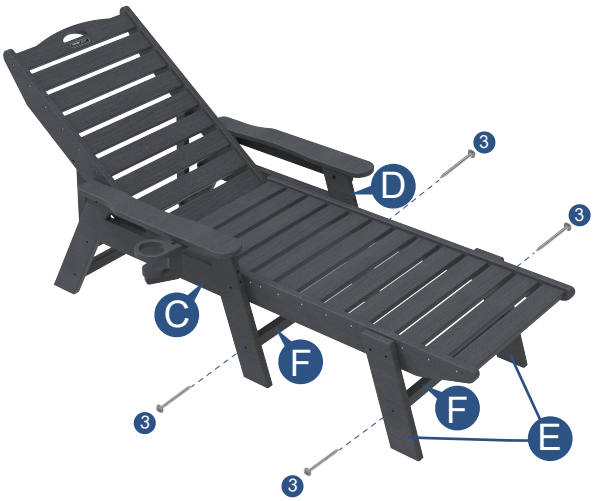

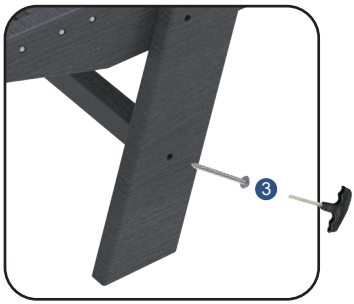

CARE AND MAINTENANCE

DO NOT:

- Avoid harsh,abrasive cleaners, and other crrosive chemicals.
- Do not use metal scouring pad for cleaning. Most stains can be removed by using a mild soap and a soft bristled brush.
- Avoid placing any direct heat source on or near the surface.
- Leaving any glassware on the Side Table under sunlight may result in burn marks on the surface. Please use a coaster when placing glassware on the Side Table.

CLEANING TIPS:

Even NALONE gets dirty - here are some ways to help keep it clean :

For a quick clean:Simply wipe down with soap and water.

For a deeper clean:

You'll need:

- 1/2 bleach and 1/3 water solution
- clean cloth
- soft bristle brush

Wipe on solution with your cloth and let it sit on the lumber for a few minutes (this will not affect the color) Then, loosen any dirt and debris that may catch in surface grooves with a soft bristle brush: hose down to rinse.

Manufacturer: Shanghaimuxinmuyeyouxiangongsi
Address: Shuangchenglu 803nong11hao1602A-1609shi, baoshanqu, shanghai 200000 CN.
Imported to AUS: SIHAO PTY LTD. 1 ROKEVA STREETEASTWOOD NSW 2122 Australia
Imported to USA: Sanven Technology Ltd. Suite 250, 9166 Anaheim Place, Rancho Cucamonga, CA 91730

EC	REP

E-CrossStu GmbH
Mainzer Landstr.69, 60329 Frankfurt am Main.

UK	REP

YH CONSULTING LIMITED.
C/O YH Consulting Limited Office 147, Centurion House, London Road, Staines-upon-Thames, Surrey, TW18 4AX



Technical Support and E-Warranty Certificate
www.vevor.com/support