©2011 Lennox Industries Inc.
Dallas, Texas, USA

icomfort™
So simple • So smart • So comfortable

SunSource™

RETAIN THESE INSTRUCTIONS FOR FUTURE REFERENCE

These instructions are intended as a general guide and do not supersede local codes in any way. Consult authorities having jurisdiction before installation.

NOTICE TO INSTALLER

UNIT PLACEMENT

It is critical for proper unit operation to place outdoor unit on an elevated surface as described in *Unit Placement* section on page 7.

DEFROST OPERATION

It is critical for proper defrost operation to set the defrost termination pins (E46) on the heat pump control prior to starting system. See *Defrost System* section on page 32 for further details.

BRAZING LINE SET TO SERVICE VALVES

It is imperative to follow the brazing technique illustrated starting on page 13 to avoid damaging the service valve's internal seals.

NOTICE

A thermostat is not included and must be ordered separately.

- The Lennox icomfort Touch® thermostat must be used in communicating application
- In non-icomfort™ applications, the Lennox ComfortSense® 7000 thermostat may be used, as well as other non-communicating thermostats.

In all cases, setup is critical to ensure proper system operation.

Field wiring examples for non-icomfort™ applications begin on page 25.

See the icomfort Touch® thermostat ***Quick Start Guide*** for communicating and partial communicating field wiring connections.

INSTALLATION INSTRUCTIONS

Dave Lennox *Signature*® Collection XP17 System

HEAT PUMPS
506586-01
06/11
Supersedes 05/11

Technical Publications
Litho U.S.A.

TABLE OF CONTENTS

General 1
Unit Dimensions 2
Model Number Identification 2
Typical Unit Parts Arrangement 3
Shipping and Packing List 4
Using Manifold Gauge Set 4
Operating Service Valves 4
Recovering Refrigerant from Existing System 6
Unit Placement 7
Removing and Installing Panels 9
New or Replacement Line Set 11
Flushing the System 16
Brazing Connections 13
Flushing Line Set and Indoor Coil 16
Installing Indoor Expansion Valve 17
Leak Test Line Set and Indoor Coil 18
Evacuating Line Set and Indoor Coil 18
Electrical 20
Heat Pump Control (A175) Jumpers and Terminals 23
Field Control Wiring 25
Servicing Unit Delivered Void of Charge 27
Unit Start-Up 27
System Refrigerant 27
Air Handler / Coil Matchups and Targeted Subcooling Values 30
Operating and Temperature Pressures 31
System Operations 32
Defrost System 32
System Status, Fault and Lockout LED Codes 40
Field Configuration and Testing 45
Maintenance (Dealer and Homeowner) 51
SunSource® Home Energy System 53
Start Up and Performance Checklist 54

General

This outdoor unit is designed for use with HFC-410A refrigerant only. This unit must be installed with an approved indoor air handler or coil. See the Lennox XP17 Engineering Handbook for approved indoor component matchups.

Unit Dimensions -- Inches (mm)

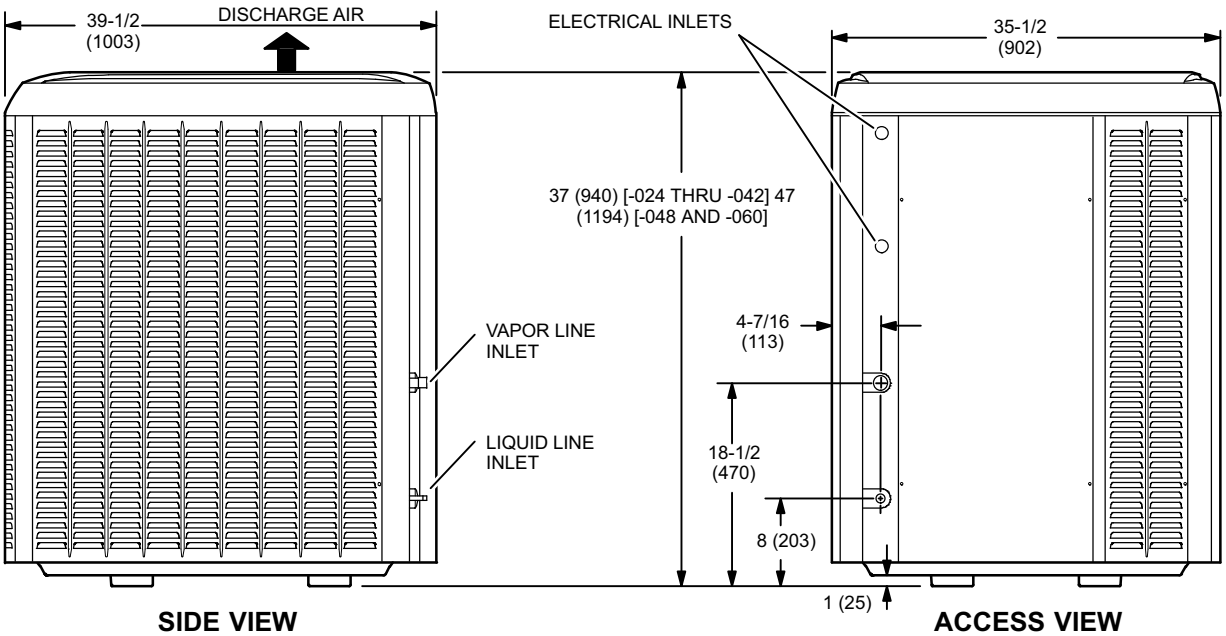

SIDE VIEW **ACCESS VIEW**

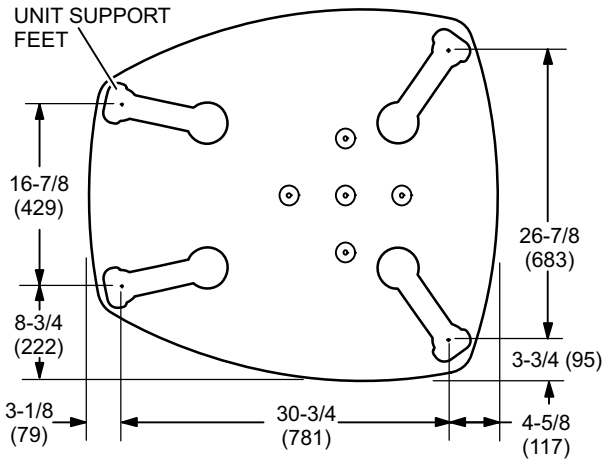

BASE WITH ELONGATED LEGS

Model Number Identification

XP 17 –036 – 230 –2

Refrigerant Type
X = R-410A

Unit Type
P = Heat Pump Outdoor Unit

Series

Nominal Cooling Capacity
024 = 2 tons
030 = 2.5 tons
036 = 3 tons
042 = 3.5 tons
048 = 4 tons
060 = 5 tons

Voltage
230 = 208/230V-1ph-60hz

Minor Revision Number

506586-01 10/10

Typical Unit Parts Arrangement

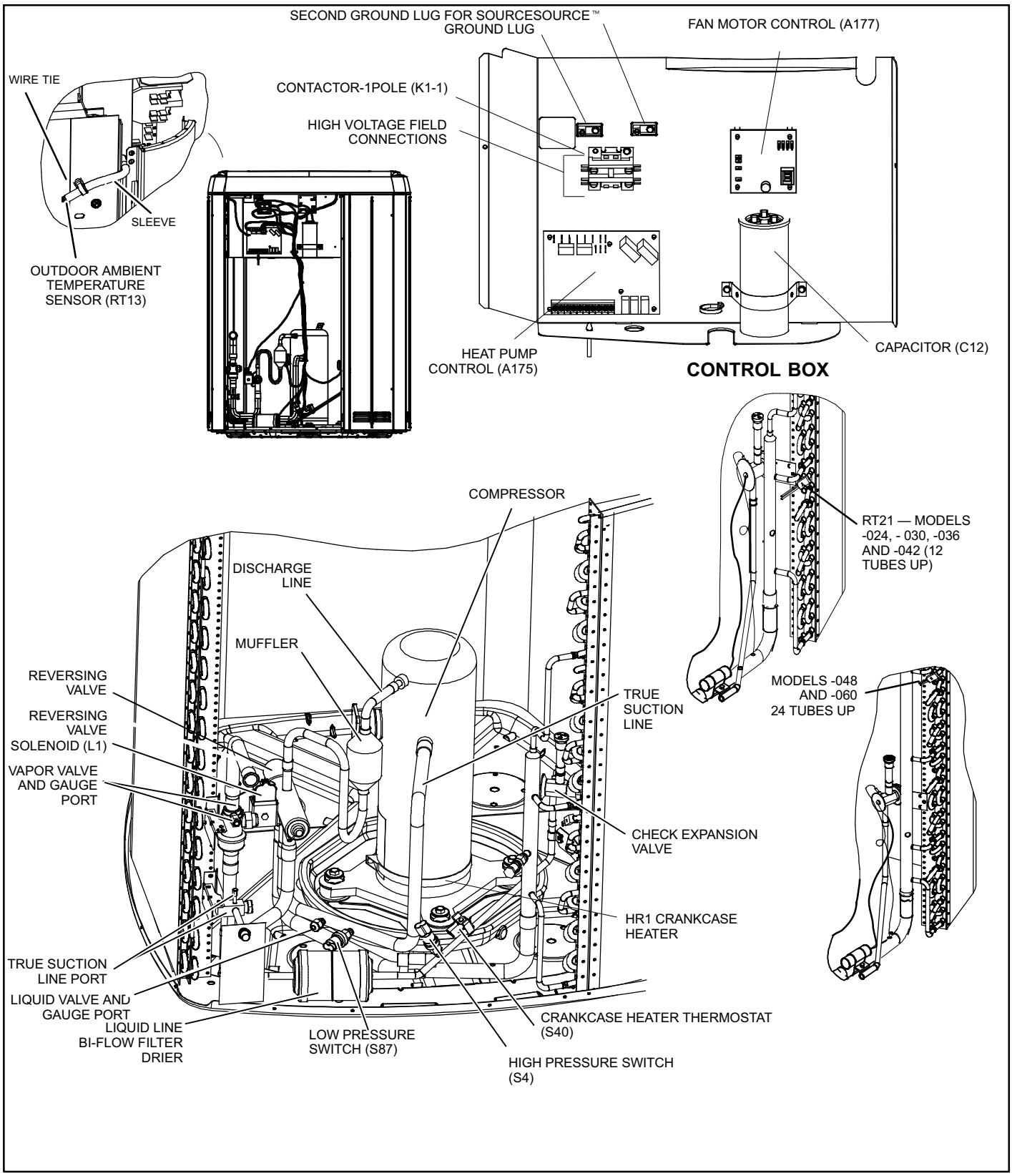

Figure 1. Typical Parts Arrangement

⚠ WARNING

Improper installation, adjustment, alteration, service or maintenance can cause personal injury, loss of life, or damage to property.

Installation and service must be performed by a licensed professional installer (or equivalent) or a service agency.

⚠ CAUTION

Physical contact with metal edges and corners while applying excessive force or rapid motion can result in personal injury. Be aware of, and use caution when working near these areas during installation or while servicing this equipment.

⚠ IMPORTANT

The Clean Air Act of 1990 bans the intentional venting of refrigerant (CFCs, HCFCs AND HFCs) as of July 1, 1992. Approved methods of recovery, recycling or reclaiming must be followed. Fines and/or incarceration may be levied for noncompliance.

⚠ WARNING

Electric Shock Hazard. Can cause injury or death. Unit must be grounded in accordance with national and local codes.

Line voltage is present at all components when unit is not in operation on units with single-pole contactors. Disconnect all remote electric power supplies before opening access panel. Unit may have multiple power supplies.

⚠ IMPORTANT

This model is designed for use in check expansion valve systems only. An indoor expansion valve approved for use with HFC-410A refrigerant must be ordered separately, and installed prior to operating the system.

Shipping and Packing List

Check unit for shipping damage. Consult last carrier immediately if damage is found.

1 — Assembled outdoor unit.

1 — Bag assembly which includes the following:

1 — Bushing (for low voltage wiring)

2 — Isolation grommets for liquid and suction lines

Using Manifold Gauge Set

When checking the system charge, only use a manifold gauge set that features low-loss anti-blow back fittings.

⚠ IMPORTANT

To prevent stripping of the various caps used, the appropriately sized wrench should be used and fitted snugly over the cap before tightening.

Manifold gauge set used with HFC-410A refrigerant systems must be capable of handling higher system operating pressures. The gauges should be rated for use with pressures of 0 - 800 psig on the high side and a low side of 30” vacuum to 250 psig with dampened speed to 500 psi. Gauge hoses must be rated for use at or up to 800 psig of pressure with a 4000 psig burst rating.

Table 1. Torque Requirements

Parts	Recommended Torque	
Service valve cap	8 ft.- lb.	11 NM
Sheet metal screws	16 in.- lb.	2 NM
Machine screws #10	28 in.- lb.	3 NM
Compressor bolts	90 in.- lb.	10 NM
Gauge port seal cap	8 ft.- lb.	11 NM

Operating Service Valves

The liquid and vapor line service valves are used for removing refrigerant, flushing, leak testing, evacuating, verifying charge and charging.

Each valve is equipped with a service port which has a factory-installed valve stem. Figure 2 provides information on how to access and operating both angle and ball service valves.

⚠ IMPORTANT

Only use Allen wrenches of sufficient hardness (50Rc - Rockwell Harness Scale minimum). Fully insert the wrench into the valve stem recess.

Service valve stems are factory-torqued (from 9 ft-lbs for small valves, to 25 ft-lbs for large valves) to prevent refrigerant loss during shipping and handling. Using an Allen wrench rated at less than 50Rc risks rounding or breaking off the wrench, or stripping the valve stem recess.

See the Lennox Service and Application Notes #C-08-1 for further details and information.

SERVICE VALVES ANGLE AND BALL

Operating Angle Type Service Valve:

1. Remove stem cap with an appropriately sized wrench.
2. Use a service wrench with a hex-head extension (3/16” for liquid line valve sizes and 5/16” for vapor line valve sizes) to back the stem out counterclockwise as far as it will go.

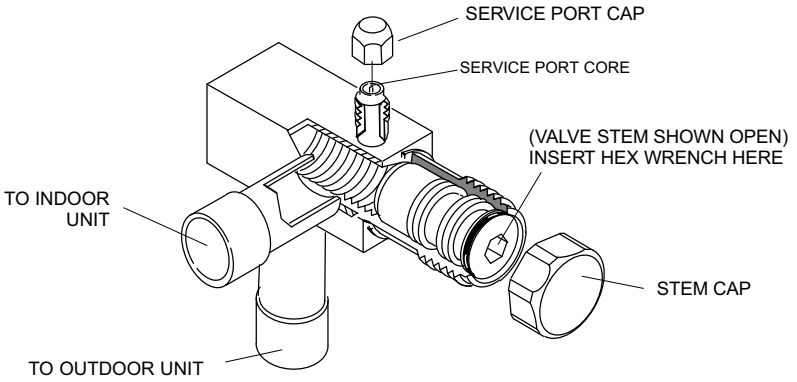

ANGLE-TYPE SERVICE VALVE (BACK-SEATED OPENED)

When service valve is **OPEN**, the service port is open to linE set, indoor and outdoor unit.

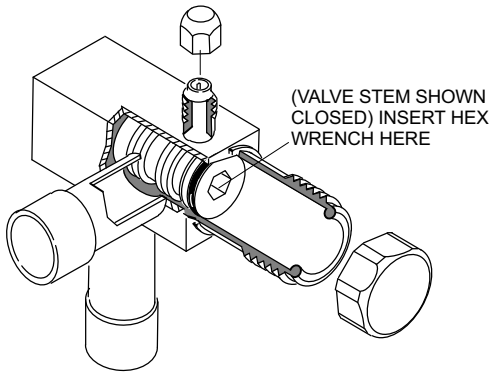

ANGLE-TYPE SERVICE VALVE (FRONT-SEATED CLOSED)

WHEN SERVICE VALVE IS **CLOSED**, THE SERVICE PORT IS OPEN TO THE LINE SET AND INDOOR UNIT.

Operating Ball Type Service Valve:

1. Remove stem cap with an appropriately sized wrench.
2. Use an appropriately sized wrenched to open. To open valve, rotate stem counterclockwise 90°. To close, rotate stem clockwise 90°.

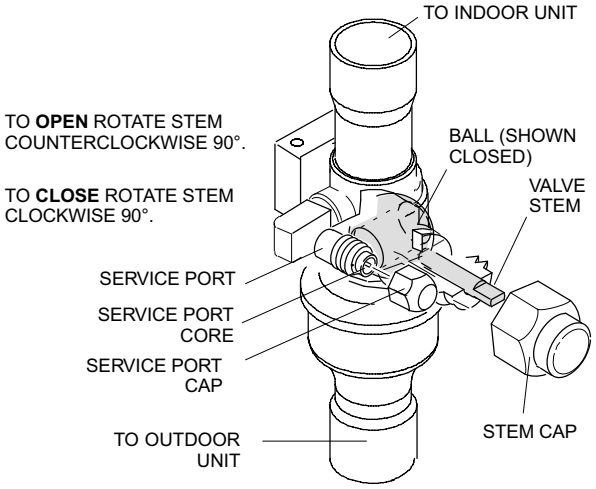

To Access Service Port:

A service port cap protects the service port core from contamination and serves as the primary leak seal.

1. Remove service port cap with an appropriately sized wrench.
2. Connect gauge set to service port.
3. When testing is completed, replace service port cap and tighten as follows:
   - With torque wrench: Finger tighten and torque cap per table 1.
   - Without torque wrench: Finger tighten and use an appropriately sized wrench to turn an additional 1/6 turn clockwise.

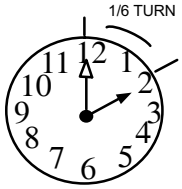

Reinstall Stem Cap:

Stem cap protects the valve stem from damage and serves as the primary seal. Replace the stem cap and tighten as follows:

- With Torque Wrench: Finger tighten and then torque cap per table 1.
- Without Torque Wrench: Finger tighten and use an appropriately sized wrench to turn an additional 1/12 turn clockwise.

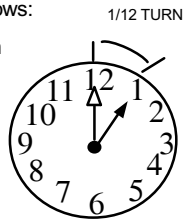

NOTE — A label with specific torque requirements may be affixed to the stem cap. If the label is present, use the specified torque.

Figure 2. Angle and Ball Service Valves

Recovering Refrigerant from Existing System

1 DISCONNECT POWER

Disconnect all power to the existing outdoor unit at the disconnect switch or main fuse box/breaker panel.

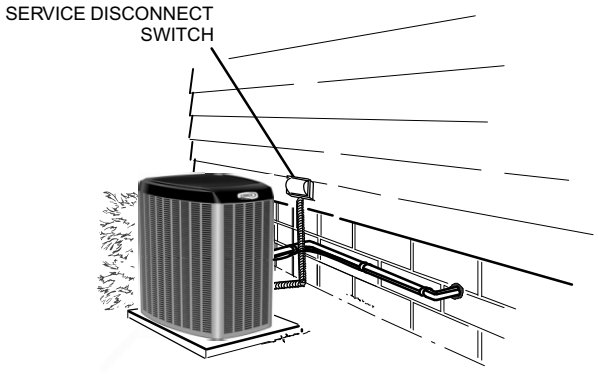

2 CONNECT MANIFOLD GAUGE SET

Connect a gauge set, clean recovery cylinder and a recovery machine to the service ports of the existing unit. Use the instruction provided with the recovery machine to make the connections.

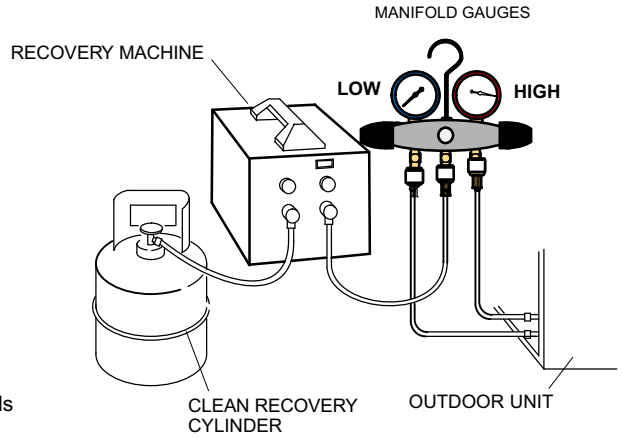

3 RECOVERING REFRIGERANT

Remove existing HCFC-22 refrigerant using one of the following methods below:

IMPORTANT — Some system configurations may contain higher than normal refrigerant charge due to either large internal coil volumes, and/or long line sets.

METHOD 1:

Us this method if the existing outdoor unit is not equipped with shut-off valves, or if the unit is not operational and you plan to use the existing HCFC-22 to flush the system.

Remove all HCFC-22 refrigerant from the existing system. Check gauges after shutdown to confirm that the entire system is completely void of refrigerant.

METHOD 2:

Use this method if the existing outdoor unit is equipped with manual shut-off valves, and you plan to use new HCFC-22 refrigerant to flush the system.

The following devices could prevent full system charge recovery into the outdoor unit:

- Outdoor unit's high or low-pressure switches (if applicable) when tripped can cycle the compressor **OFF**.
- Compressor can stop pumping due to tripped internal pressure relief valve.
- Compressor has internal vacuum protection that is designed to unload the scrolls (compressor stops pumping) when the pressure ratio meets a certain value or when the suction pressure is as high as 20 psig. (Compressor suction pressures should never be allowed to go into a vacuum. Prolonged operation at low suction pressures will result in overheating of the scrolls and permanent damage to the scroll tips, drive bearings and internal seals.)

  Once the compressor can not pump down to a lower pressure due to one of the above system conditions, shut off the vapor valve. Turn OFF the main power to unit and use a recovery machine to recover any refrigerant left in the indoor coil and line set.

Perform the following task:

A Start the existing HCFC-22 system in the cooling mode and close the liquid line valve.

B Use the compressor to pump as much of the existing HCFC-22 refrigerant into the outdoor unit until the outdoor system is full (high pressure switch will trip and shut the compressor off). Turn the outdoor unit main power OFF and use a recovery machine to remove the remaining refrigerant from the system.

NOTE — It may be necessary to bypass the low pressure switch (if equipped) to ensure complete refrigerant evacuation.

C When the low side system pressures reach 0 psig, close the vapor line valve.

D Check gauges after shutdown to confirm that the valves are not allowing refrigerant to flow back into the low side of the system.

Figure 3. Refrigerant Recovery Procedure

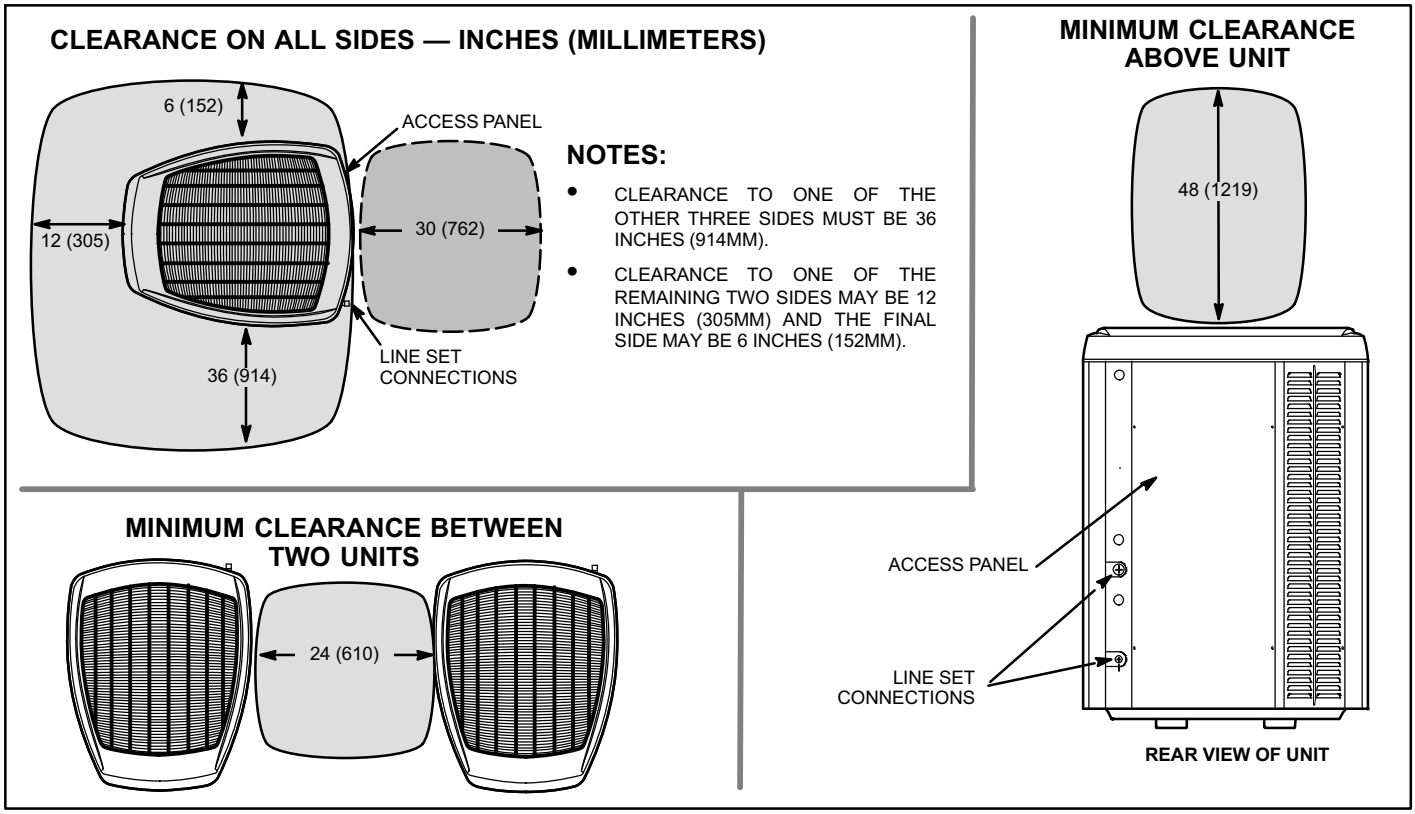

Figure 4. Installation Clearances

Unit Placement

⚠ CAUTION

In order to avoid injury, take proper precaution when lifting heavy objects.

See *Unit Dimensions* on page 3 for sizing mounting slab, platforms or supports. Refer to figure 4 for mandatory installation clearance requirements.

POSITIONING CONSIDERATIONS

Consider the following when positioning the unit:

- Some localities are adopting sound ordinances based on the unit's sound level registered from the adjacent property, not from the installation property. Install the unit as far as possible from the property line.
- When possible, do not install the unit directly outside a window. Glass has a very high level of sound transmission. For proper placement of unit in relation to a window see the provided illustration in figure 5, detail A.

PLACING UNIT ON SLAB

When installing unit at grade level, the top of the slab should be high enough above grade so that water from higher ground will not collect around the unit. The slab should have a slope tolerance as described in figure 5, detail B.

NOTE — If necessary for stability, anchor unit to slab as described in figure 5, detail D.

ELEVATING THE UNIT

Units are outfitted with elongated support feet as illustrated in figure 5, detail C.

If additional elevation is necessary, raise the unit by extending the height of the unit support feet. This may be achieved by using a 2 inch (50.8mm) Schedule 40 female threaded adapter.

The specified coupling will fit snuggly into the recessed portion of the feet. Use additional 2-inch (50.8mm) Schedule 40 male threaded adaptors which can be threaded into the female threaded adaptors to make additional adjustments to the level of the unit.

NOTE — Keep the height of extenders short enough to ensure a sturdy installation. If it is necessary to extend further, consider a different type of field-fabricated framework that is sturdy enough for greater heights.

DETAIL A— Outside Unit Placement

Install unit away from windows.

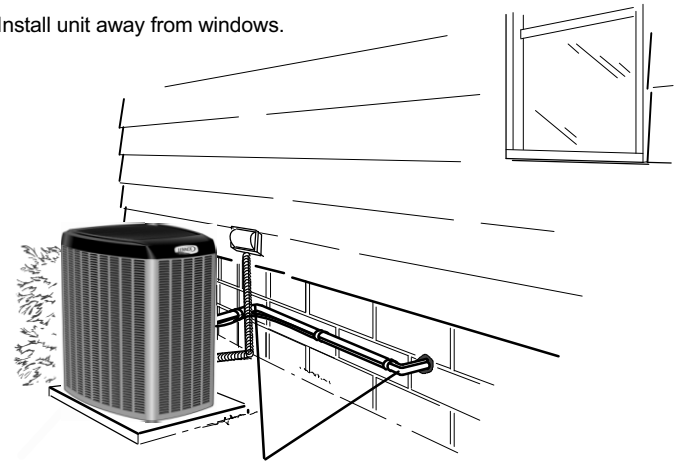

TWO 90° ELBOWS INSTALLED IN LINE SET WILL REDUCE LINE SET VIBRATION.

DETAIL B— Slab Mounting at Ground Level

Install unit level or, if on a slope, maintain slope tolerance of two (2) degrees (or two inches per five feet [50 mm per 1.5 m]) away from building structure.

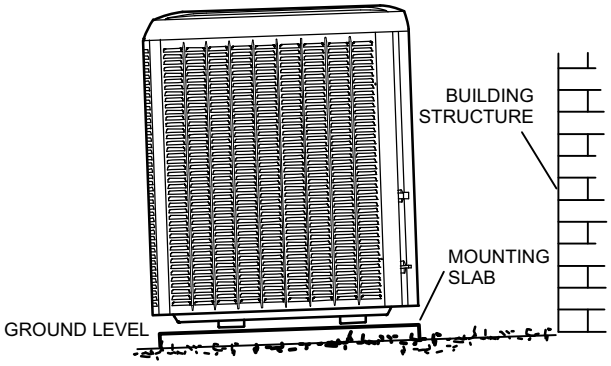

DETAIL C— Elevated Slab Mounting using Feet Extenders

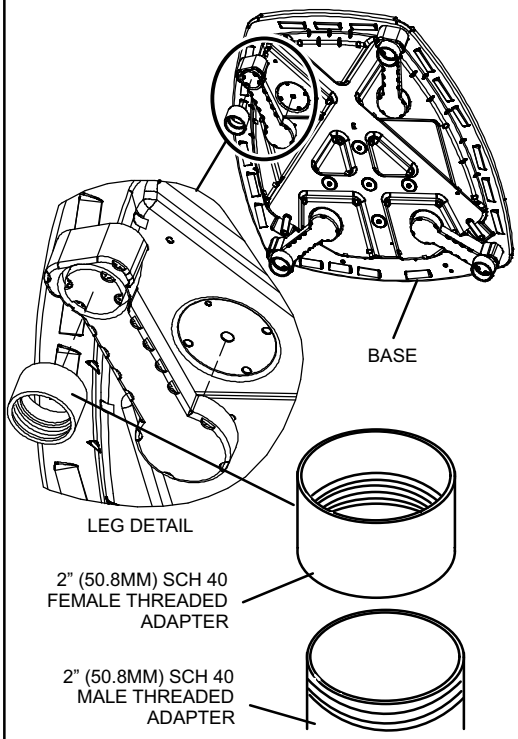

Use additional 2” SCH 40 male threaded adapters which can be threaded into the female threaded adapters to make additional adjustments to the level of the unit.

STABILIZING UNIT ON UNEVEN SURFACES

DETAIL D— Slab Side Mounting

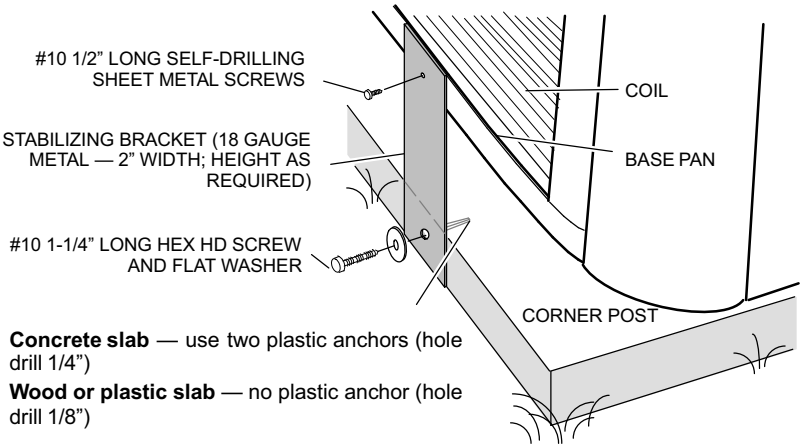

Concrete slab — use two plastic anchors (hole drill 1/4”)

Wood or plastic slab — no plastic anchor (hole drill 1/8”)

DETAIL E — Deck Top Mounting

Stabilizing bracket (18 gauge metal — 2” (50.8mm) width; height as required); bend to form right angle as exampled below.

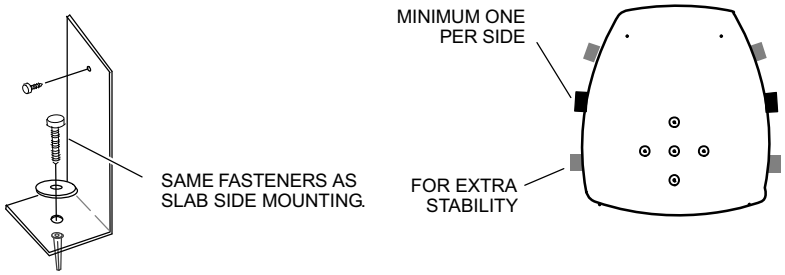

One bracket per side (minimum). For extra stability, two brackets per side, two inches (51mm) from each corner.

IMPORTANT — To help stabilize an outdoor unit, some installations may require strapping the unit to the pad using brackets and anchors commonly available in the marketplace.

Figure 5. Placement, Slab Mounting and Stabilizing Unit

STABILIZING UNIT ON UNEVEN SURFACES

⚠ IMPORTANT

Unit Stabilizer Bracket Use (field-provided):

Always use stabilizers when unit is raised above the factory height. (Elevated units could become unstable in gusty wind conditions).

Stabilizers may be used on factory height units when mounted on unstable an uneven surface.

1. Remove two side louvered panels to expose the unit base.
2. Install the brackets as illustrated in figure 5, detail D using conventional practices.
3. Replace the panels after installation is complete.

ROOF MOUNTING

Install the unit a minimum of six inches (152 mm) above the roof surface to avoid ice build-up around the unit. Locate the unit above a load bearing wall or area of the roof that can adequately support the unit. Consult local codes for rooftop applications.

If unit coil cannot be mounted away from prevailing winter winds, a wind barrier should be constructed. Size barrier at least the same height and width as outdoor unit. Mount barrier 24 inches (610 mm) from the sides of the unit in the direction of prevailing winds.

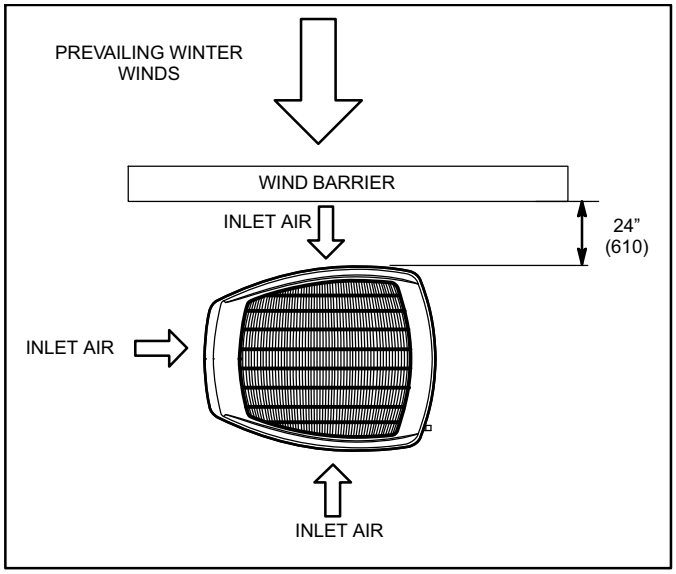

Figure 6. Rooftop Application and Wind Barrier — Inches (millimeters)

NOTICE

Roof Damage!

This system contains both refrigerant and oil. Some rubber roofing material may absorbed oil and cause the rubber to swell when it comes into contact with oil. The rubber will then bubble and could cause leaks. Protect the roof surface to avoid exposure to refrigerant and oil during service and installation. Failure to follow this notice could result in damage to roof surface.

Removing and Installing Panels

⚠ IMPORTANT

Do not allow panels to hang on unit by top tab. Tab is for alignment and not designed to support weight of panel.

⚠ IMPORTANT

To help stabilize an outdoor unit, some installations may require strapping the unit to the pad using brackets and anchors commonly available in the marketplace.

⚠ WARNING

To prevent personal injury, or damage to panels, unit or structure, be sure to observe the following:

While installing or servicing this unit, carefully stow all removed panels out of the way, so that the panels will not cause injury to personnel, nor cause damage to objects or structures nearby, nor will the panels be subjected to damage (e.g., being bent or scratched).

While handling or stowing the panels, consider any weather conditions, especially windy conditions, that may cause panels to be blown around and battered.

REMOVING AND INSTALLING PANELS

Panel shown slightly rotated to allow top tab to exit (or enter) top slot for removing (or installing) panel.

LOUVERED PANEL REMOVAL

Remove the louvered panels as follows:

1. Remove two screws, allowing the panel to swing open slightly.
2. Hold the panel firmly throughout this procedure Rotate bottom corner of panel away from hinged corner post until lower three tabs clear the slots as illustrated in **detail B.**
3. Move panel down until lip of upper tab clears the top slot in corner post as illustrated in **detail A**.

LOUVERED PANEL INSTALLATION

Position the panel almost parallel with the unit as illustrated in **detail D** with the screw side as close to the unit as possible. Then, in a continuous motion:

1. Slightly rotate and guide the lip of top tab inward as illustrated in **detail A** and **C**; then upward into the top slot of the hinge corner post.
2. Rotate panel to vertical to fully engage all tabs.
3. Holding the panel's hinged side firmly in place, close the right-hand side of the panel, aligning the screw holes.
4. When panel is correctly positioned and aligned, insert the screws and tighten.

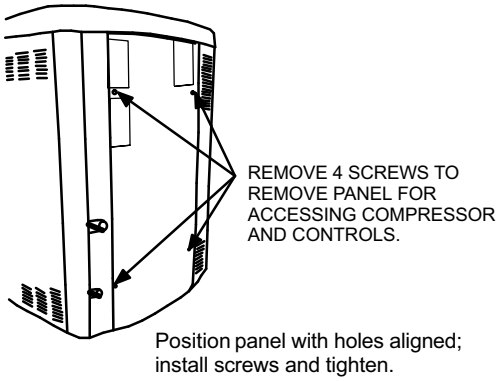

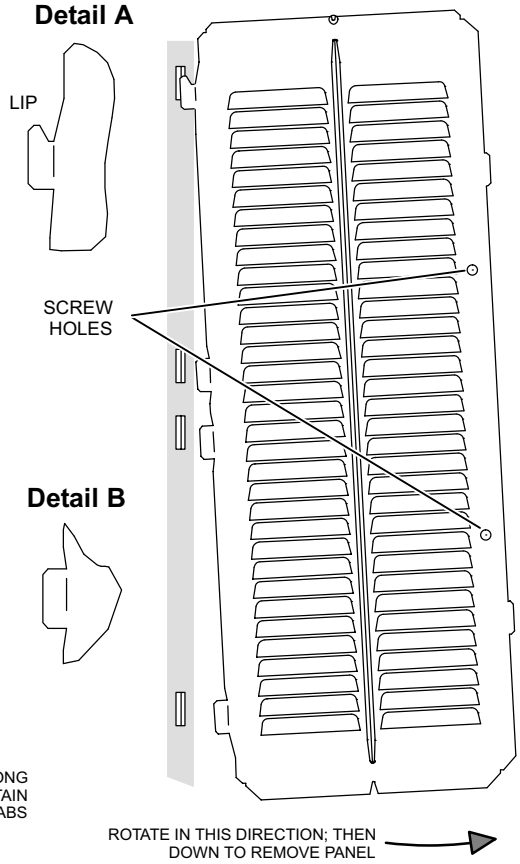

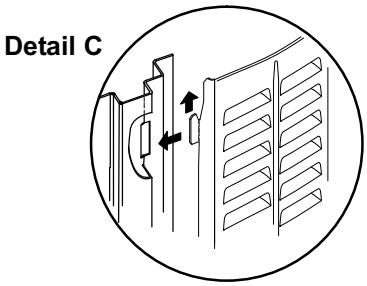

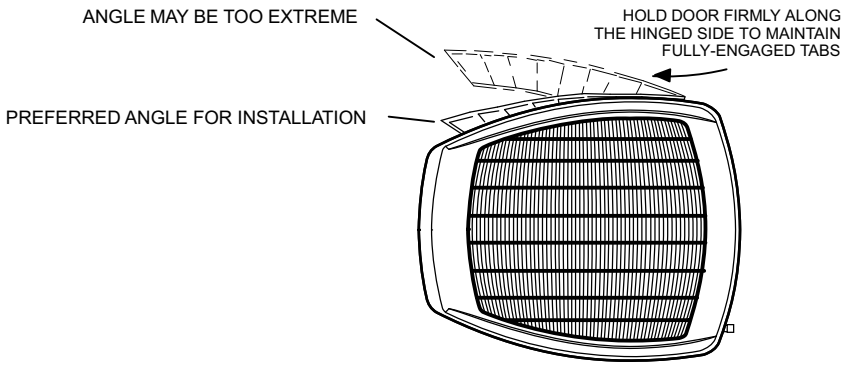

Figure 7. Removing and Installing Panels

New or Replacement Line Set

REFRIGERANT LINE SET

This section provides information on installation or replacement of existing line set. If new or replacement line set is not being installed then proceed to *Brazing Connections* on page 13.

⚠ IMPORTANT

Lennox highly recommends changing line set when converting the existing system from HCFC-22 to HFC-410A If that is not possible and the line set is the proper size as reference in Table 2, use the procedure outlined under Flushing the System on page 13.

If refrigerant lines are routed through a wall, then seal and isolate the opening so vibration is not transmitted to the building. Pay close attention to line set isolation during installation of any HVAC system. When properly isolated from building structures (walls, ceilings. floors), the refrigerant lines will not create unnecessary vibration and subsequent sounds. See figure 8 for recommended installation practices. Also, consider the following when placing and installing a high-efficiency outdoor unit.

⚠ IMPORTANT

Refrigerant lines must not contact structure.

Liquid lines that meter the refrigerant, such as RFC1 liquid lines, must not be used in this application. Existing line set of proper size as listed in table 2 may be reused. If system was previously charged with HCFC-22 refrigerant, then existing line set must be flushed (see *Flushing the System* on page 16).

Field refrigerant piping consists of liquid and vapor lines from the outdoor unit to the indoor unit coil (braze connections). Use Lennox L15 (sweat, non-flare) series line set, or field-fabricated refrigerant line sizes as listed in table 2.

Table 2. Refrigerant Line Set — Inches (mm)

Model	Liquid Line	Vapor Line	L15 Line Sets Feet (Meters)
-024 and -030	3/8” (10)	3/4” (19)	L15 line set sizes are dependent on unit match up. See XP17 Engineering Handbook to determine correct line set sizes.
-036, -042 and -048	3/8” (10)	7/8” (22)	
-060	3/8” (10)	1-1/8” (29)	Field Fabricated
NOTE — Some applications may required a field provided 7/8” to 1-1/8” adapter			

NOTE — When installing refrigerant lines longer than 50 feet, see the Lennox Refrigerant Piping Design and Fabrication Guidelines, or contact Lennox Technical Support Product Applications for assistance. :

To obtain the correct information from Lennox, be sure to communicate the following information:

- Model (XP17) and size of unit (e.g. -036).
- Line set diameters for the unit being installed as listed in table 2 and total length of installation.
- Number of elbows vertical rise or drop in the piping.

The compressor is charged with sufficient Polyol ester oil for line set lengths up to 50 feet. Recommend adding oil to system based on the amount of refrigerant charge in the system. No need to add oil in system with 20 pounds of refrigerant or less. For systems over 20 pounds - add one ounce of every five pounds of refrigerant.

Recommended topping-off POE oils are Mobil EAL ARCTIC 22 CC or ICI EMKARATE™ RL32CF.

⚠ WARNING

Polyol Ester (POE) oils used with HFC-410A refrigerant absorb moisture very quickly. It is very important that the refrigerant system be kept closed as much as possible. DO NOT remove line set caps or service valve stub caps until you are ready to make connections.

⚠ IMPORTANT

Mineral oils are not compatible with HFC-410A If oil must be added, it must be a Polyol ester oil.

Line Set Isolation — The following illustrations are examples of proper refrigerant line set isolation:

REFRIGERANT LINE SET — TRANSITION FROM VERTICAL TO HORIZONTAL

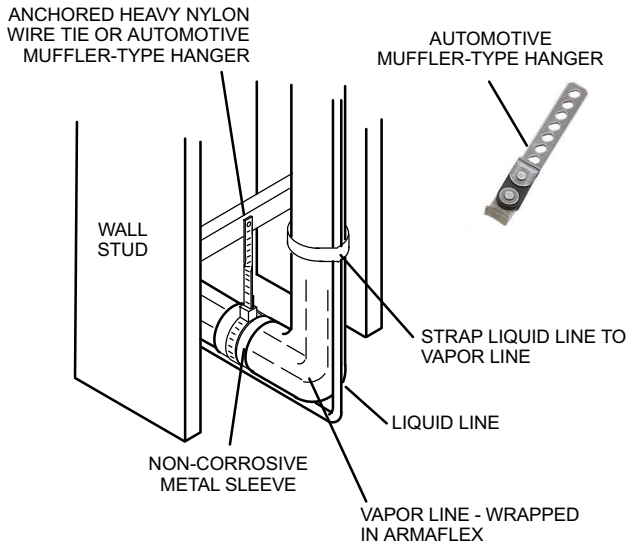

REFRIGERANT LINE SET — INSTALLING HORIZONTAL RUNS

To hang line set from joist or rafter, use either metal strapping material or anchored heavy nylon wire ties.

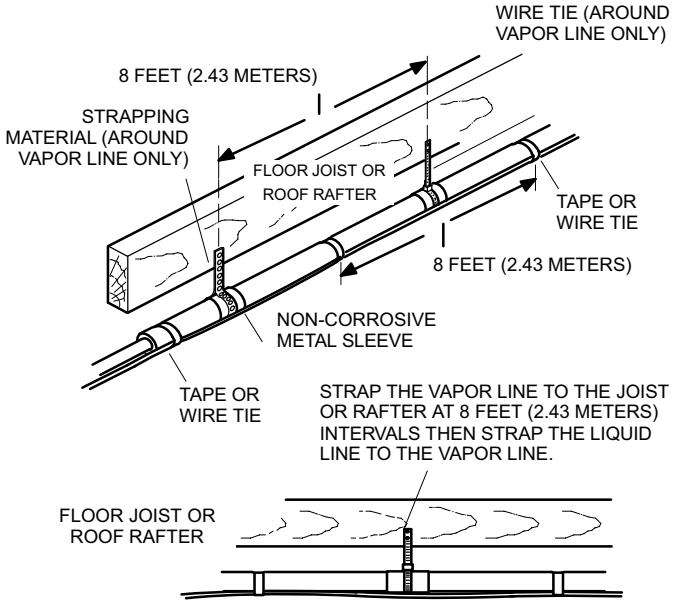

REFRIGERANT LINE SET — INSTALLING VERTICAL RUNS (NEW CONSTRUCTION SHOWN)

NOTE — Insulate liquid line when it is routed through areas where the surrounding ambient temperature could become higher than the temperature of the liquid line or when pressure drop is equal to or greater than 20 psig.

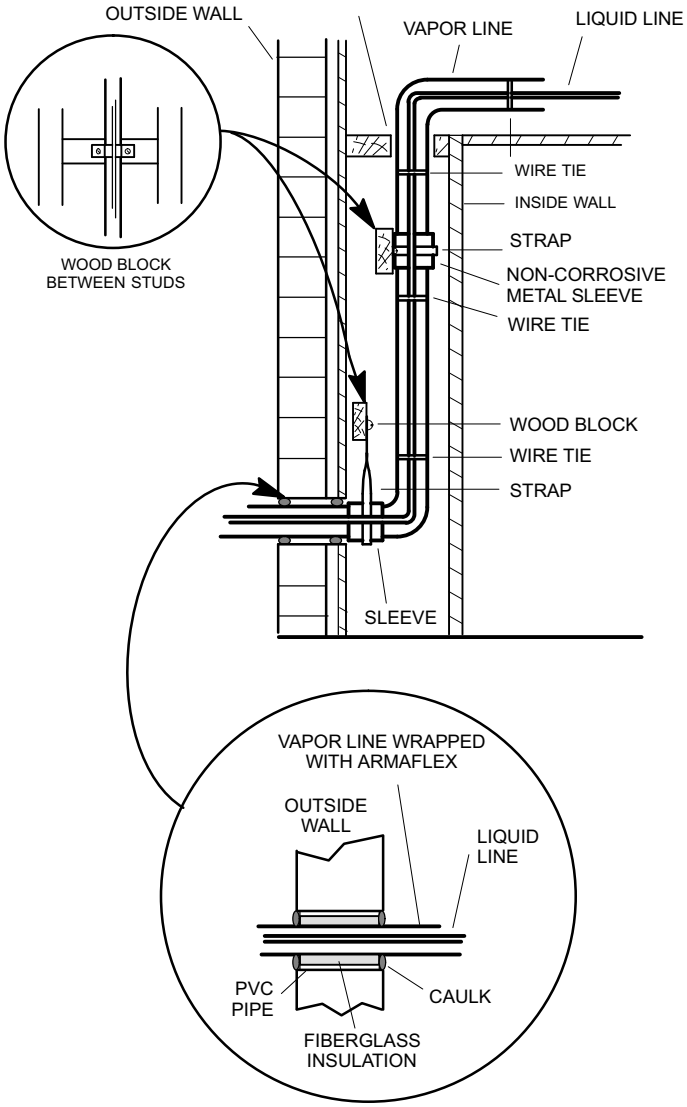

NOTE — Similar installation practices should be used if line set is to be installed on exterior of outside wall.

Figure 8. Line Set Installation

Brazing Connections

Use the procedures outline in figures 9 and 10 for brazing line set connections to service valves.

⚠ WARNING

Danger of fire. Bleeding the refrigerant charge from only the high side may result in pressurization of the low side shell and suction tubing. Application of a brazing torch to a pressurized system may result in ignition of the refrigerant and oil mixture - Check the high and low pressures before applying heat.

⚠ WARNING

When using a high pressure gas such as dry nitrogen to pressurize a refrigeration or air conditioning system, use a regulator that can control the pressure down to 1 or 2 psig (6.9 to 13.8 kPa).

⚠ CAUTION

Brazing alloys and flux contain materials which are hazardous to your health.

Avoid breathing vapors or fumes from brazing operations. Perform operations only in well-ventilated areas.

Wear gloves and protective goggles or face shield to protect against burns.

Wash hands with soap and water after handling brazing alloys and flux.

⚠ IMPORTANT

Connect gauge set low pressure side to vapor line service valve and repeat procedure starting at paragraph 4 for brazing the liquid line to service port valve.

⚠ IMPORTANT

Allow braze joint to cool before removing the wet rag from the service valve. Temperatures above 250ºF can damage valve seals.

⚠ IMPORTANT

Use silver alloy brazing rods with 5% minimum silver alloy for copper-to-copper brazing. Use 45% minimum alloy for copper-to-brass and copper-to-steel brazing.

⚠ WARNING

Fire, Explosion and Personal Safety Hazard.

Failure to follow this warning could result in damage, personal injury or death.

Never use oxygen to pressurize or purge refrigeration lines. Oxygen, when exposed to a spark or open flame, can cause fire and/or an explosion, that could result in property damage, personal injury or death.

1 PIPING PANEL REMOVAL AND PREPARING LINE SET

Remove piping panel for easier access to service valves. Cut ends of the refrigerant lines square (free from nicks or dents) and debur the ends. The pipe must remain round. Do not crimp end of the line.

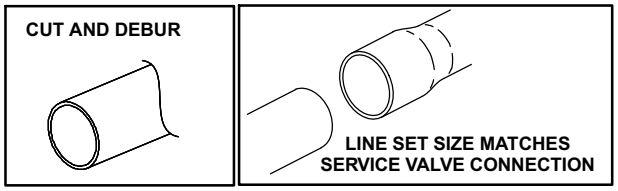

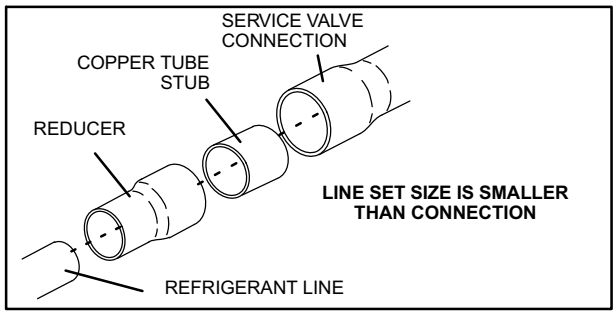

DO NOT CRIMP SERVICE VALVE CONNECTOR WHEN PIPE IS SMALLER THAN CONNECTION

2 CAP AND CORE REMOVAL

Remove service cap and core from both the suction / vapor and liquid line service ports.

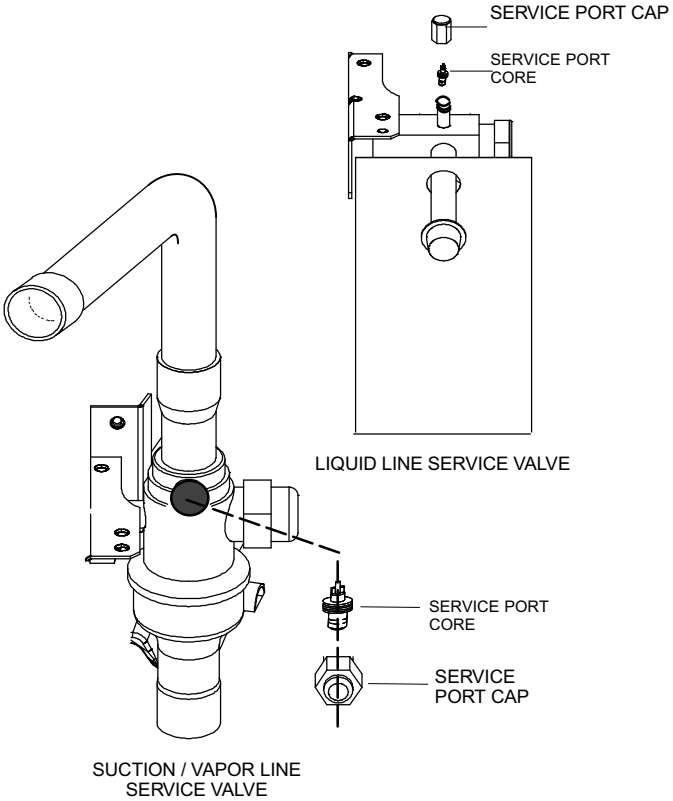

3 ATTACH THE MANIFOLD GAUGE SET FOR BRAZING LIQUID AND SUCTION / VAPOR LINE SERVICE VALVES

A Connect gauge set low pressure side to liquid line service valve (service port).

B Connect gauge set center port to bottle of nitrogen with regulator.

C With valve core removed from the suction / vapor line service port, nitrogen flow will have an exit point.

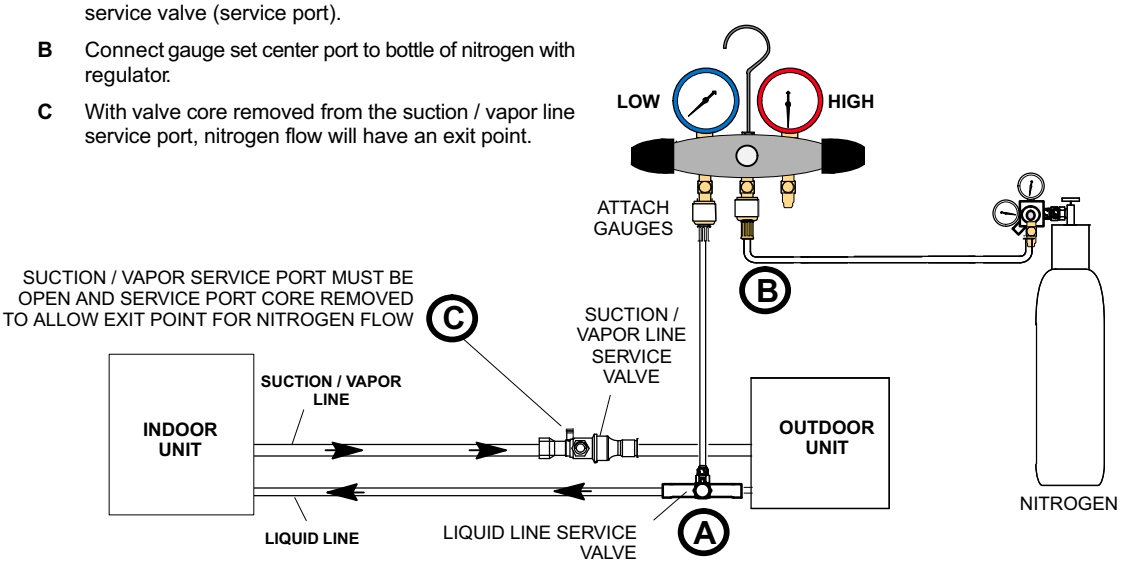

Figure 9. Brazing Procedures

506586-01 10/10

4 WRAP SERVICE VALVES

To help protect service valve seals during brazing, wrap water saturated cloths around service valve bodies and copper tube stubs. Use additional water saturated cloths underneath the valve body to protect the base paint.

5 FLOW NITROGEN

Flow regulated nitrogen (at 1 to 2 psig) through the refrigeration gauge set into the valve stem port connection on the liquid service valve and out of the suction / vapor valve stem port. See steps **3A, 3B** and **3C** on previous page and below for manifold gauge setup.

WARNING

1. **FIRE, PERSONAL INJURY, OR PROPERTY DAMAGE** will result if you do not wrap a water saturated cloth around both liquid and suction line service valve bodies and copper tube stub while brazing in the line set! The braze, when complete, must be quenched with water to absorb any residual heat.
2. Do not open service valves until refrigerant lines and indoor coil have been leak-tested and evacuated. Refer to procedures provided in this supplement.

6 BRAZE LINE SET

Water saturated cloths must remain water saturated throughout the brazing and cool-down process.

A Braze liquid line to liquid line service valve.

B Braze suction / vapor line to suction / vapor service valve.

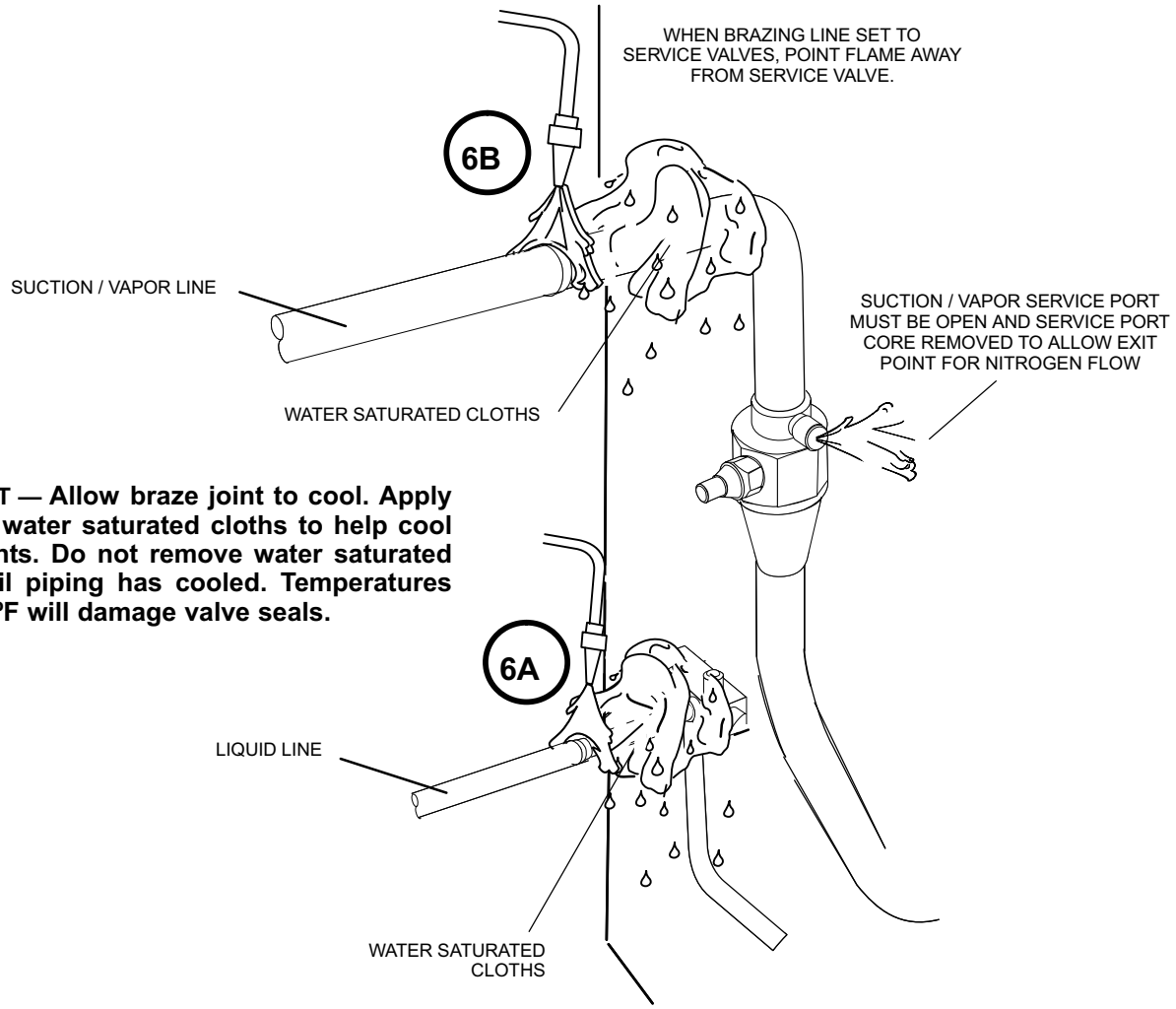

IMPORTANT — Allow braze joint to cool. Apply additional water saturated cloths to help cool brazed joints. Do not remove water saturated cloths until piping has cooled. Temperatures above 250ºF will damage valve seals.

7 PREPARATION FOR NEXT STEP

After all connections have been brazed, disconnect manifold gauge set from service ports. Apply additional water saturated cloths to both services valves to cool piping. Once piping is cool, remove all water saturated cloths. Refer to the unit installation instructions for the next step in preparing the unit.

Figure 10. Brazing Procedures (Continued)

Flushing Line Set and Indoor Coil

1A TYPICAL EXISTING FIXED ORIFICE REMOVAL PROCEDURE (UNCASED COIL SHOWN)

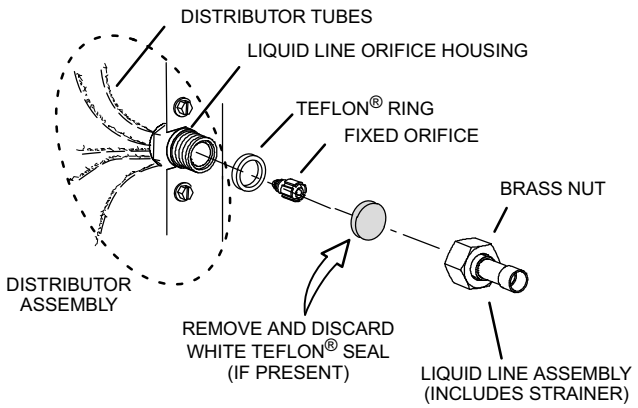

A On fully cased coils, remove the coil access and plumbing panels.

B Remove any shipping clamps holding the liquid line and distributor assembly.

C Using two wrenches, disconnect liquid line from liquid line orifice housing. Take care not to twist or damage distributor tubes during this process.

D Remove and discard fixed orifice, valve stem assembly if present and Teflon® washer as illustrated above.

E Use a field-provided fitting to temporary reconnect the liquid line to the indoor unit's liquid line orifice housing.

2 CONNECT GAUGES AND EQUIPMENT FOR FLUSHING PROCEDURE

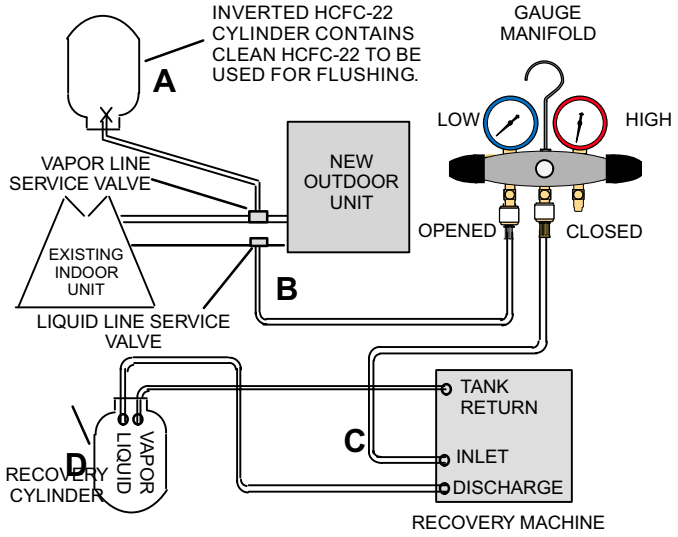

A Inverted HCFC-22 cylinder with clean refrigerant to the vapor service valve.

B HCFC-22 gauge set (low side) to the liquid line valve.

C HCFC-22 gauge set center port to inlet on the recovery machine with an empty recovery tank to the gauge set.

D Connect recovery tank to recovery machines per machine instructions.

OR

1B TYPICAL EXISTING EXPANSION VALVE REMOVAL PROCEDURE (UNCASED COIL SHOWN)

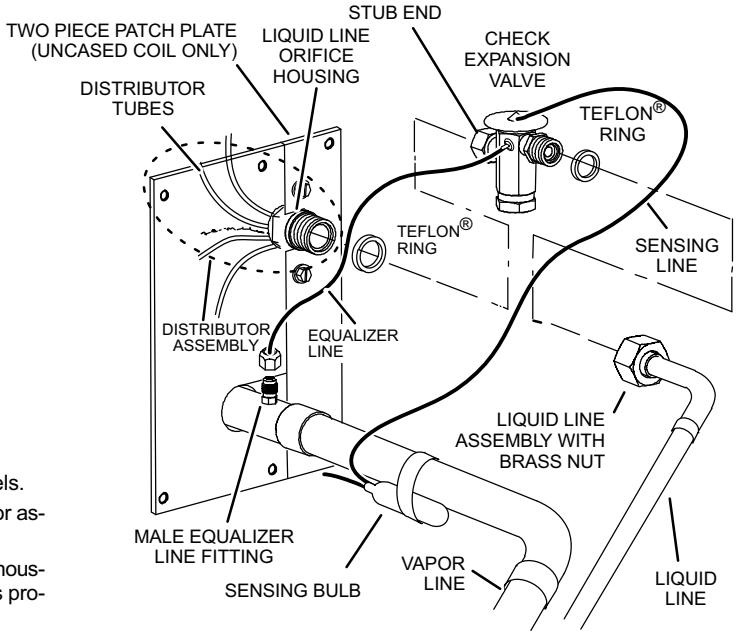

A On fully cased coils, remove the coil access and plumbing panels.

B Remove any shipping clamps holding the liquid line and distributor assembly.

C Disconnect the equalizer line from the check expansion valve equalizer line fitting on the vapor line.

D Remove the vapor line sensing bulb.

E Disconnect the liquid line from the check expansion valve at the liquid line assembly.

F Disconnect the check expansion valve from the liquid line orifice housing. Take care not to twist or damage distributor tubes during this process.

G Remove and discard check expansion valve and the two Teflon® rings.

H Use a field-provided fitting to temporary reconnect the liquid line to the indoor unit's liquid line orifice housing.

3 FLUSHING LINE SET

The line set and indoor unit coil must be flushed with at least the same amount of clean refrigerant that previously charged the system. Check the charge in the flushing cylinder before proceeding.

A Set the recovery machine for liquid recovery and start the recovery machine. Open the gauge set valves to allow the recovery machine to pull a vacuum on the existing system line set and indoor unit coil.

B Invert the cylinder of clean HCFC-22 and open its valve to allow liquid refrigerant to flow into the system through the vapor line valve. Allow the refrigerant to pass from the cylinder and through the line set and the indoor unit coil before it enters the recovery machine.

C After all of the liquid refrigerant has been recovered, switch the recovery machine to vapor recovery so that all of the HCFC-22 vapor is recovered. Allow the recovery machine to pull down to 0 the system.

D Close the valve on the inverted HCFC-22 drum and the gauge set valves. Pump the remaining refrigerant out of the recovery machine and turn the machine off.

Figure 11. Flushing Line Set and Indoor Coil

Installing Indoor Expansion Valve

This outdoor unit is designed for use in systems that use check expansion valve metering device. See the *Lennox XP17 Engineering Handbook* for approved check expansion valve kit match-ups and application information. The check expansion valve unit can be installed internal or external to the indoor coil. In applications where an uncased coil is being installed in a field-provided plenum, install the check expansion valve in a manner that will provide access for field servicing of the check expansion valve. Refer to below illustration for reference during installation of check expansion valve unit.

INDOOR EXPANSION VALVE INSTALLATION

(Uncased Coil Shown)

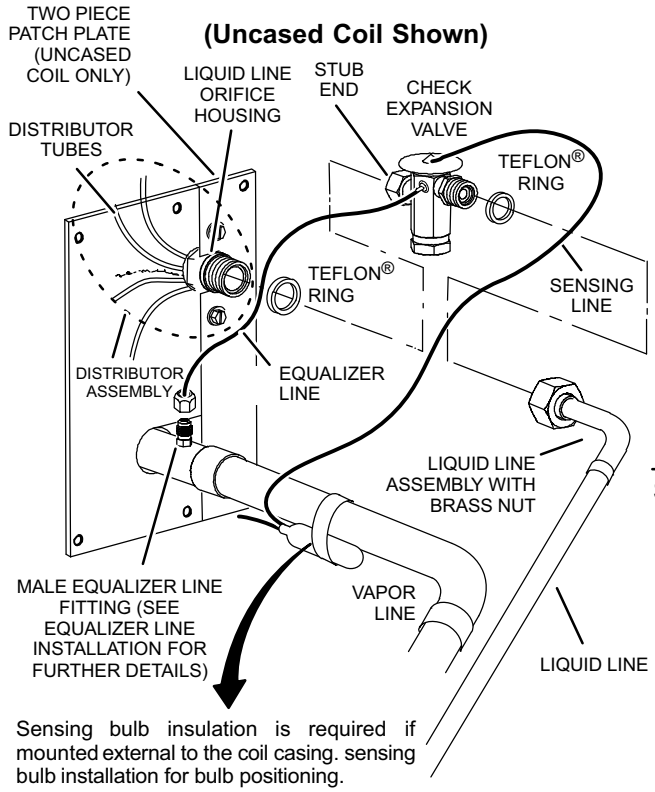

Sensing bulb insulation is required if mounted external to the coil casing. sensing bulb installation for bulb positioning.

A Remove the field-provided fitting that temporary reconnected the liquid line to the indoor unit's distributor assembly.

B Install one of the provided Teflon® rings around the stubbed end of the check expansion valve and lightly lubricate the connector threads and expose surface of the Teflon® ring with refrigerant oil.

C Attach the stubbed end of the check expansion valve to the liquid line orifice housing. Finger tighten and use an appropriately sized wrench to turn an additional 1/2 turn clockwise as illustrated in the figure above, or 20 ft-lb.

D Place the remaining Teflon® washer around the other end of the check expansion valve. Lightly lubricate connector threads and expose surface of the Teflon® ring with refrigerant oil.

E Attach the liquid line assembly to the check expansion valve. Finger tighten and use an appropriately sized wrench to turn an additional 1/2 turn clockwise as illustrated in the figure above or 20 ft-lb.

1/2 Turn

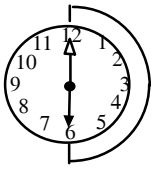

SENSING BULB INSTALLATION

A Attach the vapor line sensing bulb in the proper orientation as illustrated to the right using the clamp and screws provided.

NOTE — Confirm proper thermal contact between vapor line and check expansion bulb before insulating the sensing bulb once installed.

B Connect the equalizer line from the check expansion valve to the equalizer vapor port on the vapor line. Finger tighten the flare nut plus 1/8 turn (7 ft-lbs) as illustrated below.

1/8 Turn

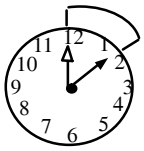

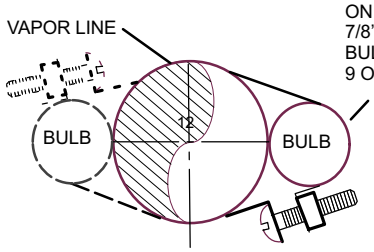

ON LINES SMALLER THAN 7/8", MOUNT SENSING BULB AT EITHER THE 3 OR 9 O'CLOCK POSITION.

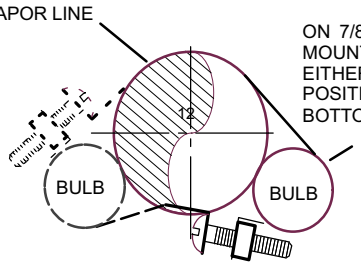

ON 7/8" AND LARGER LINES, MOUNT SENSING BULB AT EITHER THE 4 OR 8 O'CLOCK POSITION. NEVER MOUNT ON BOTTOM OF LINE.

NOTE — NEVER MOUNT ON BOTTOM OF LINE.

EQUALIZER LINE INSTALLATION

A Remove and discard either the flare seal cap or flare nut with copper flare seal bonnet from the equalizer line port on the vapor line as illustrated in the figure to the right.

B Remove and discard either the flare seal cap or flare nut with copper flare seal bonnet from the equalizer line port on the vapor line as illustrated in the figure to the right.

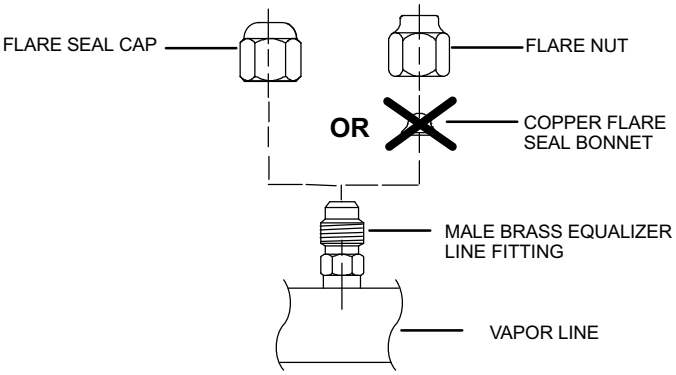

Figure 12. Installing Indoor Expansion Valve

⚠ IMPORTANT

The Environmental Protection Agency (EPA) prohibits the intentional venting of HFC refrigerants during maintenance, service, repair and disposal of appliance. Approved methods of recovery, recycling or reclaiming must be followed.

⚠ IMPORTANT

If this unit is being matched with an approved line set or indoor unit coil which was previously charged with mineral oil, or if it is being matched with a coil which was manufactured before January of 1999, the coil and line set must be flushed prior to installation. Take care to empty all existing traps. Polyol ester (POE) oils are used in Lennox units charged with HFC-410A refrigerant. Residual mineral oil can act as an insulator, preventing proper heat transfer. It can also clog the expansion device, and reduce the system performance and capacity.
Failure to properly flush the system per the instructions below will void the warranty.

Leak Test Line Set and Indoor Coil

⚠ IMPORTANT

Leak detector must be capable of sensing HFC refrigerant.

⚠ WARNING

When using a high pressure gas such as dry nitrogen to pressurize a refrigeration or air conditioning system, use a regulator that can control the pressure down to 1 or 2 psig (6.9 to 13.8 kPa).

⚠ WARNING

Refrigerant can be harmful if it is inhaled. Refrigerant must be used and recovered responsibly.

Failure to follow this warning may result in personal injury or death.

1 CONNECT GAUGE SET

A Connect an HFC-410A manifold gauge set high pressure hose to the vapor valve service port.

NOTE — Normally, the high pressure hose is connected to the liquid line port. However, connecting it to the vapor port better protects the manifold gauge set from high pressure damage.

B With both manifold valves closed, connect the cylinder of HFC-410A refrigerant to the center port of the manifold gauge set.

NOTE — Later in the procedure, the HFC-410A container will be replaced by the nitrogen container.

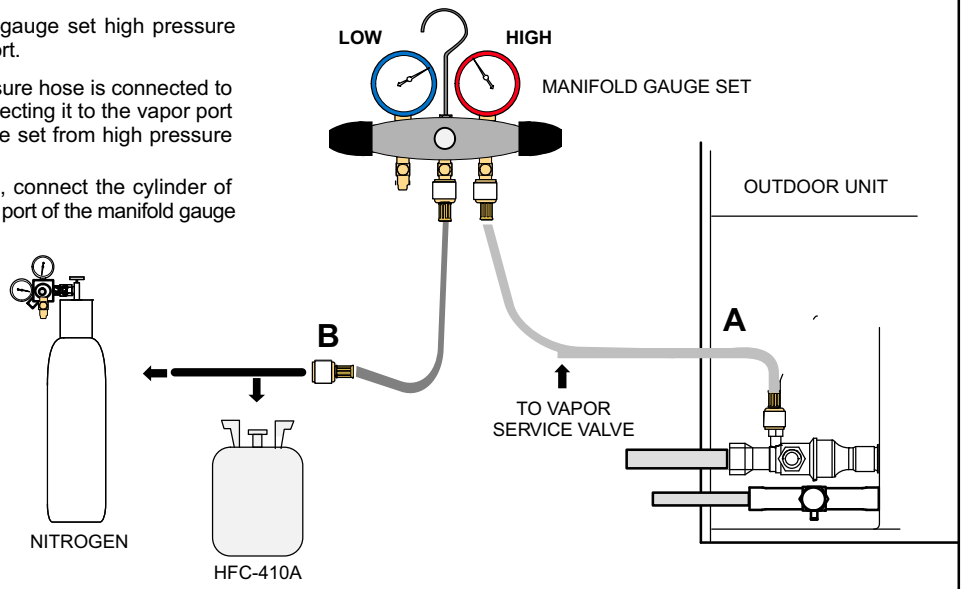

2 TEST FOR LEAKS

After the line set has been connected to the indoor and outdoor units, check the line set connections and indoor unit for leaks. Use the following procedure to test for leaks:

A With both manifold valves closed, connect the cylinder of HFC-410A refrigerant to the center port of the manifold gauge set. Open the valve on the HFC-410A cylinder (vapor only).

B Open the high pressure side of the manifold to allow HFC-410A into the line set and indoor unit. Weigh in a trace amount of HFC-410A. *[A trace amount is a maximum of two ounces (57 g) refrigerant or three pounds (31 kPa) pressure].* Close the valve on the HFC-410A cylinder and the valve on the high pressure side of the manifold gauge set. Disconnect the HFC-410A cylinder.

C Connect a cylinder of dry nitrogen with a pressure regulating valve to the center port of the manifold gauge set.

D Adjust dry nitrogen pressure to 150 psig (1034 kPa). Open the valve on the high side of the manifold gauge set in order to pressurize the line set and the indoor unit.

E After a few minutes, open one of the service valve ports and verify that the refrigerant added to the system earlier is measurable with a leak detector.

F After leak testing disconnect gauges from service ports.

Figure 13. Leak Test

Evacuating Line Set and Indoor Coil

1 CONNECT GAUGE SET

NOTE — Remove cores from service valves (if not already done).

A Connect low side of manifold gauge set with 1/4 SAE in-line tee to *vapor* line service valve

B Connect high side of manifold gauge set to *liquid* line service valve

C Connect micron gauge available connector on the 1/4 SAE in-line tee.

D Connect the vacuum pump (with vacuum gauge) to the center port of the manifold gauge set. The center port line will be used later for both the HFC-410A and nitrogen containers.

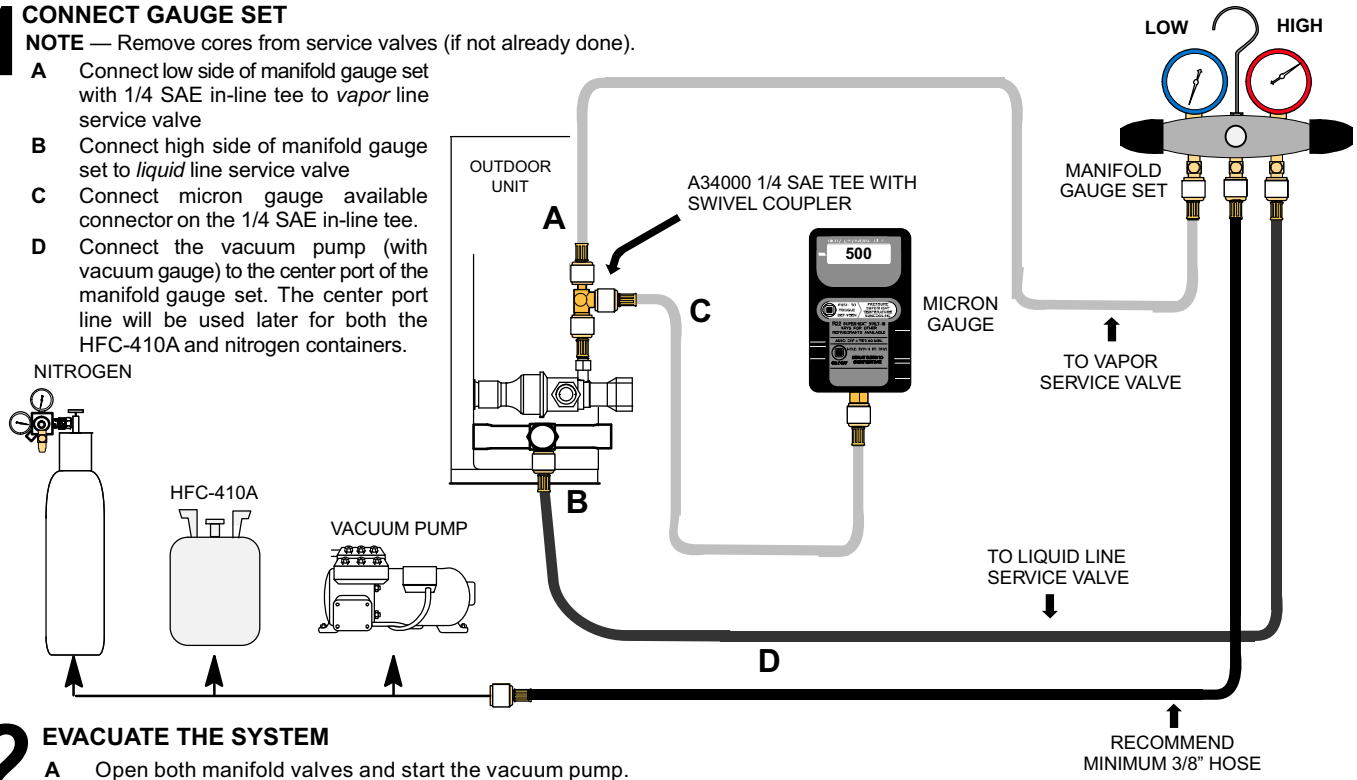

2 EVACUATE THE SYSTEM

A Open both manifold valves and start the vacuum pump.

B Evacuate the line set and indoor unit to an **absolute pressure** of 23,000 microns (29.01 inches of mercury).

***NOTE** — During the early stages of evacuation, it is desirable to close the manifold gauge valve at least once. A rapid rise in pressure indicates a relatively large leak. If this occurs, **repeat the leak testing procedure**.*

***NOTE** — The term **absolute pressure** means the total actual pressure within a given volume or system, above the absolute zero of pressure. Absolute pressure in a vacuum is equal to atmospheric pressure minus vacuum pressure.*

C When the absolute pressure reaches 23,000 microns (29.01 inches of mercury), perform the following:

- Close manifold gauge valves
- Close valve on vacuum pump
- Turn off vacuum pump
- Disconnect manifold gauge center port hose from vacuum pump
- Attach manifold center port hose to a dry nitrogen cylinder with pressure regulator set to 150 psig (1034 kPa) and purge the hose.
- Open manifold gauge valves to break the vacuum in the line set and indoor unit.
- Close manifold gauge valves.

D Shut off the dry nitrogen cylinder and remove the manifold gauge hose from the cylinder. Open the manifold gauge valves to release the dry nitrogen from the line set and indoor unit.

E Reconnect the manifold gauge to the vacuum pump, turn the pump on, and continue to evacuate the line set and indoor unit until the absolute pressure does not rise above 500 microns (29.9 inches of mercury) within a 20-minute period after shutting off the vacuum pump and closing the manifold gauge valves.

F When the absolute pressure requirement above has been met, disconnect the manifold hose from the vacuum pump and connect it to an upright cylinder of HFC-410A refrigerant. Open the manifold gauge valve 1 to 2 psig in order to release the vacuum in the line set and indoor unit.

G Perform the following:

- Close manifold gauge valves.
- Shut off HFC-410A cylinder.
- Reinstall service valve cores by removing manifold hose from service valve. Quickly install cores with core tool while maintaining a positive system pressure.
- Replace stem caps and secure finger tight, then tighten an additional one-sixth (1/6) of a turn as illustrated.

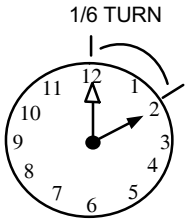

Figure 14. Evacuating System

⚠ IMPORTANT

Use a thermocouple or thermistor electronic vacuum gauge that is calibrated in microns. Use an instrument capable of accurately measuring down to 50 microns.

⚠ WARNING

Danger of Equipment Damage. Avoid deep vacuum operation. Do not use compressors to evacuate a system. Extremely low vacuums can cause internal arcing and compressor failure. Damage caused by deep vacuum operation will void warranty.

Evacuating the system of non-condensables is critical for proper operation of the unit. Non-condensables are defined as any gas that will not condense under temperatures and pressures present during operation of an air conditioning system. Non-condensables and water suction combine with refrigerant to produce substances that corrode copper piping and compressor parts.

Electrical

In the U.S.A., wiring must conform with current local codes and the current National Electric Code (NEC). In Canada, wiring must conform with current local codes and the current Canadian Electrical Code (CEC).

Refer to the furnace or air handler installation instructions for additional wiring application diagrams and refer to unit nameplate for minimum circuit ampacity and maximum overcurrent protection size.

24VAC TRANSFORMER

Use the transformer provided with the furnace or air handler for low-voltage control power (24VAC - 40 VA minimum)

1 SIZE CIRCUIT AND INSTALL DISCONNECT SWITCH

Refer to the unit nameplate for minimum circuit ampacity, and maximum fuse or circuit breaker (HACR per NEC). Install power wiring and properly sized disconnect switch.

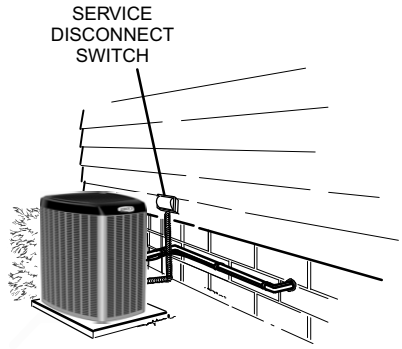

NOTE — Units are approved for use only with copper conductors. Ground unit at disconnect switch or to an earth ground.

2 INSTALL THERMOSTAT

Install room thermostat (ordered separately) on an inside wall approximately in the center of the conditioned area and 5 feet (1.5m) from the floor. It should not be installed on an outside wall or where it can be affected by sunlight or drafts.

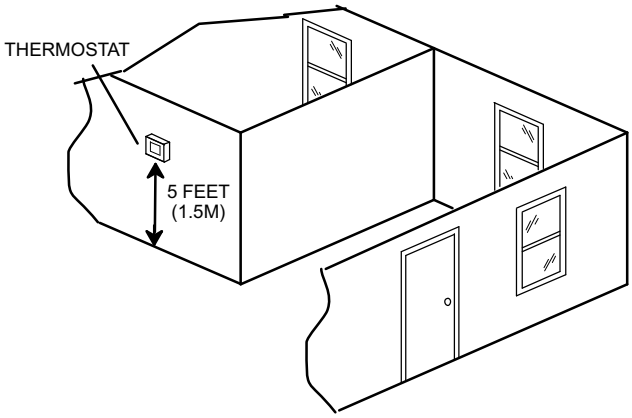

NOTE — 24VAC, Class II circuit connections are made in the control box.

⚠ WARNING

Electric Shock Hazard. Can cause injury or death. Unit must be grounded in accordance with national and local codes.

Line voltage is present at all components when unit is not in operation on units with single-pole contactors. Disconnect all remote electric power supplies before opening access panel. Unit may have multiple power supplies.

⚠ CAUTION

ELECTROSTATIC DISCHARGE (ESD) Precautions and Procedures	Electrostatic discharge can affect electronic components. Take precautions during unit installation and service to protect the unit's electronic controls. Precautions will help to avoid control exposure to electrostatic discharge by putting the unit, the control and the technician at the same electrostatic potential. Neutralize electrostatic charge by touching hand and all tools on an unpainted unit surface before performing any service procedure

3 A. ROUTE CONTROL WIRES — NON-COMMUNICATING

Install low voltage control wiring from outdoor to indoor unit and from thermostat to indoor unit.

A Run 24VAC control wires through hole with grommet.

B Make 24VAC control wire connections to heat pump control (A175) .

NOTE — Do not bundle any excess 24VAC control wires inside control box.

NOTE — Wire tie provides low voltage wire strain relief and to maintain separation of field installed low and high voltage circuits.

NOTE — For proper voltages, select control wires gauge per table below.

WIRE RUN LENGTH	AWG#	INSULATION TYPE
LESS THAN 100' (30 METERS)	18	TEMPERATURE RATING
MORE THAN 100' (30 METERS)	16	35ºC MINIMUM.

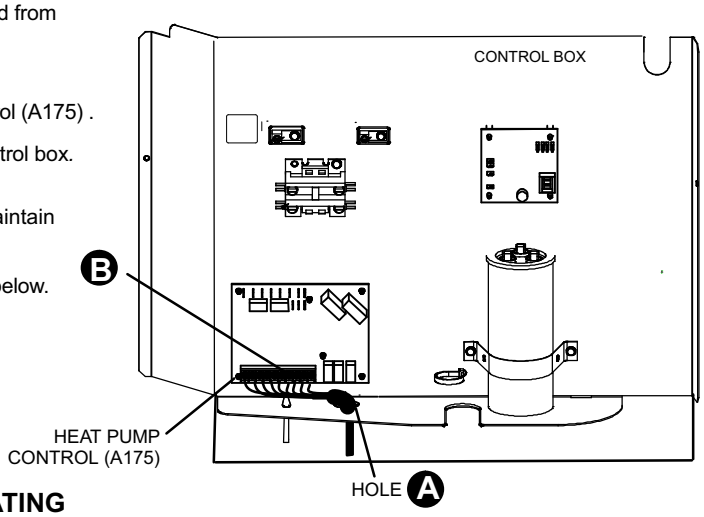

B. ROUTE CONTROL WIRES — COMMUNICATING

Maximum length of wiring (18 gauge) for all connections on the RSBus is limited to 1500 feet (457 meters). Color-coded, temperature rating 95°F (35°C) minimum, solid core. (Class II Rated Wiring)

4 ROUTE HIGH VOLTAGE AND GROUND WIRES

Any excess high voltage field wiring should be trimmed and secured away from any low voltage field wiring. To facilitate a conduit, a cutout is located in the bottom of the control box. Connect conduit to the control box using a proper conduit fitting.

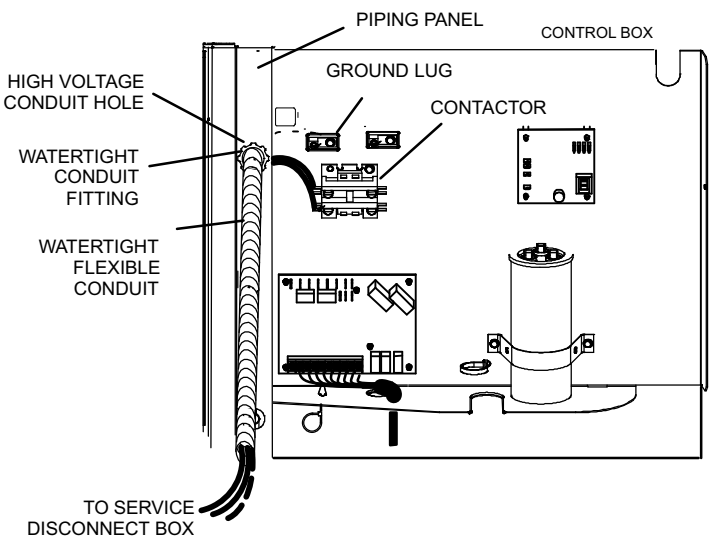

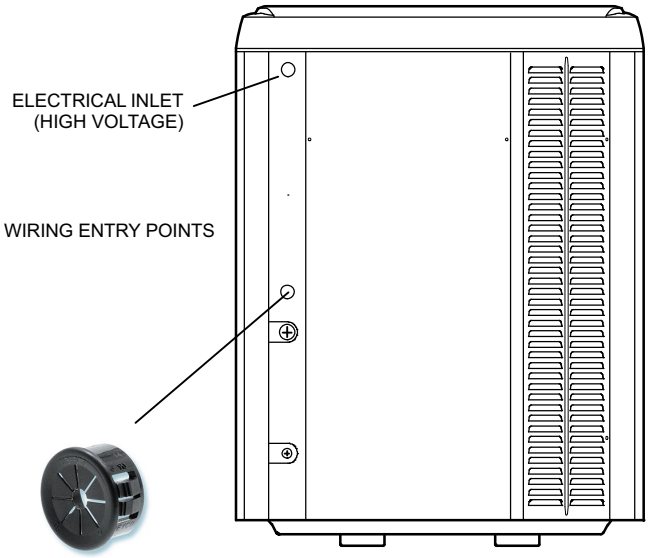

ACCESS VIEW

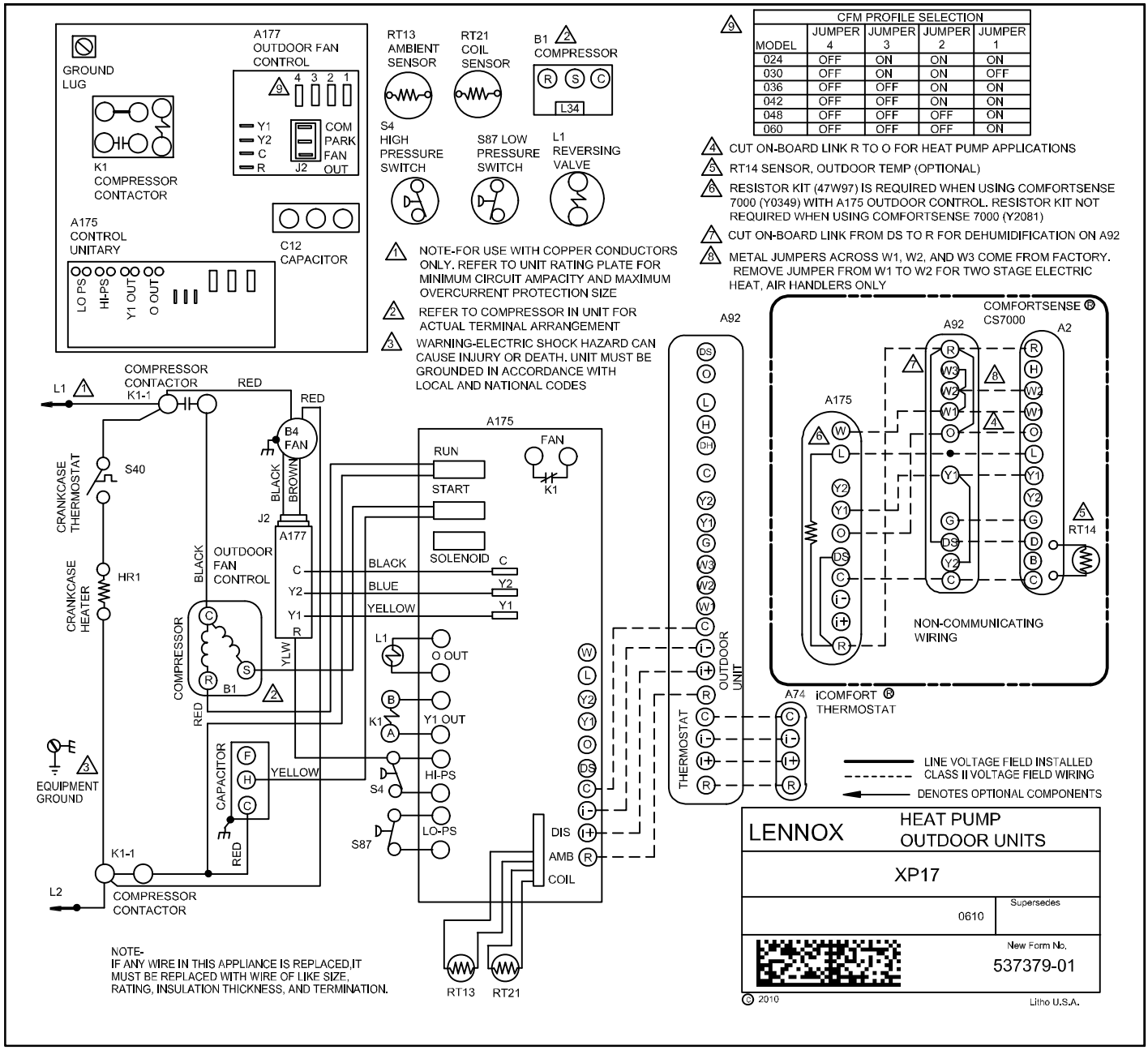

Figure 15. Typical XP17 Wiring

Heat Pump Control (A175) Jumpers and Terminals

HEAT PUMP CONTROL — ONE STAGE

Table 3 on page 24 provides additional information concerning jumpers, links, and connections for the heat pump control.

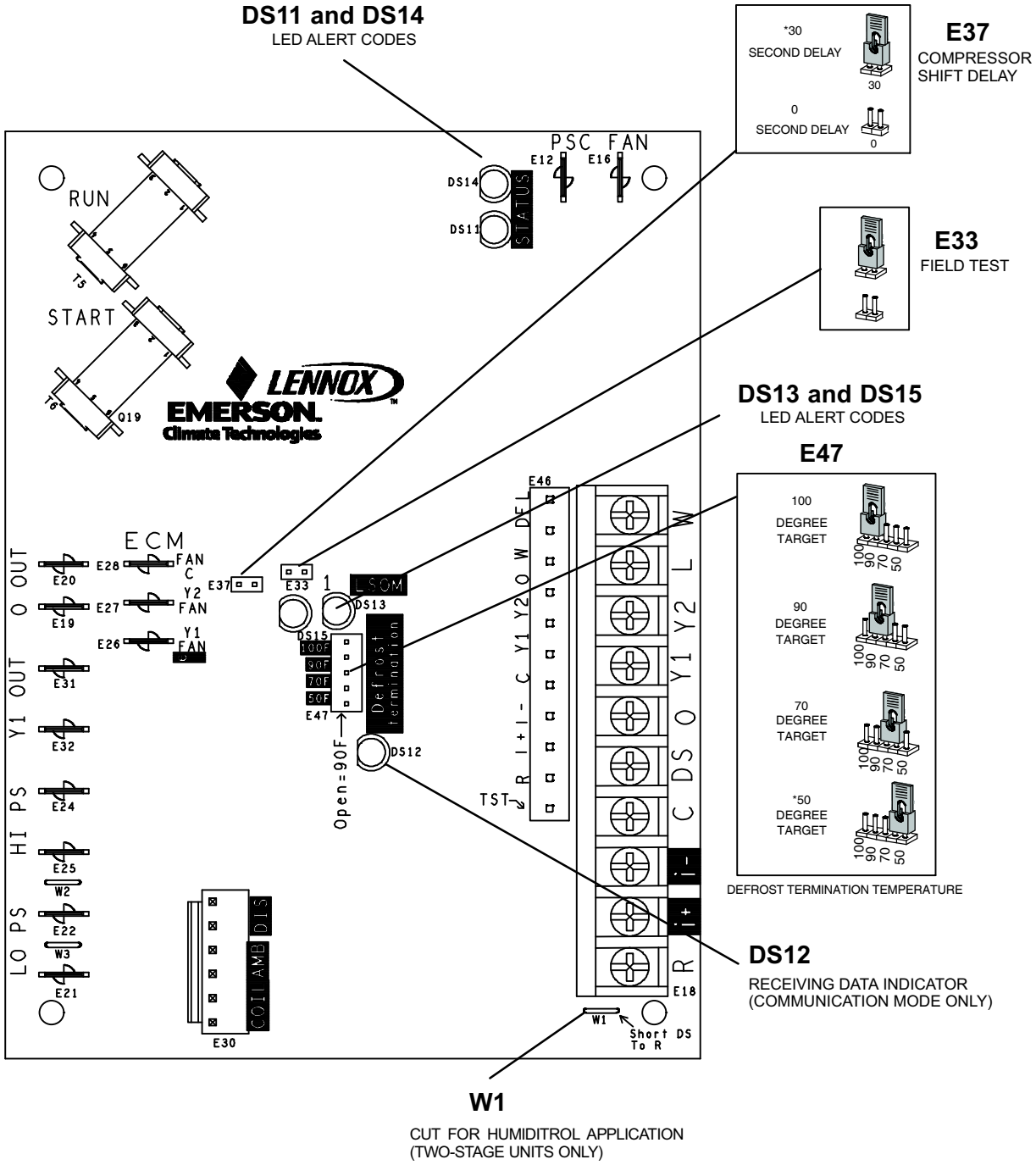

Figure 16. Heat Pump Control (A175) Jumpers, Connections and LED Locations

Table 3. Heat Pump Control (A175) Jumper and Terminal Descriptions

Board ID	Label	Description
E12	PSC Fan	240 VAC output connection for outdoor fan.
E16	PSC Fan	240 VAC input connection for outdoor fan.
E18	W	24VAC output for defrost auxiliary heat output.
	L	Thermostat service light connection.
	Y2	24VAC thermostat input/output for second stage operation of the unit.
	Y1	24VAC thermostat input for first stage operation of the unit.
	O	24VAC thermostat input for reversing valve operation
	DS	Humiditrol Input
	C	24VAC system common
	i-	Input/Output - RSBus data low. Used in communicating mode only with compatible indoor thermostat.
	i+	Input/Output - RSBus data high. Used in communicating mode only with compatible indoor thermostat.
	R	24VAC system power input
E19 and E20	O OUT	24 VAC output connection for reversing valve.
E21 and E22	LO-PS	Connection for low-pressure switch (2.4 milliamps @ 18VAC)
E31 and E32	Y1 OUT	24 VAC common output, switched for enabling compressor contactor.
E24 and E25	HS-PS	S87 connection for high-pressure switch (E25) and 24VAC (E24) to A177 “R” input.
E26	FAN 1	First Stage and second stage basic and precision dehumidification ECM fan motor 24VDC output connection 1.
E27	FAN 2	Second stage basic and precision dehumidification ECM fan motor 24VDC output connection 2.
E28	FAN C	ECM common connection for ECM fan.
E30	Six position square pin header. P4 provides connections for the temperature sensors.	
	DIS (YELLOW)	Not used.
	AMB (BLACK) (RT13)	AMB 1 — Outdoor ambient temperature sensor supply. AMB 2 — Outdoor ambient temperature return. Range is -40ºF to +140ºF
	COIL (BROWN) (RT21)	COIL 1 — Outdoor coil temperature sensor supply. COIL 2 — Outdoor coil temperature sensor return Range is -40ºF to 140ºF. Sensor is clipped on a 5/16” copper return bend.
E33	Field Test	This jumper allows service personnel to defeat the timed off control, initiate or terminate a defrost and field programming of unit nominal capacity feature.
E37	Comp Shift Delay	Two position square pin header. When jumper is installed, a 30-second compressor shift delay which de-energizes the compressor contactor output, second-stage solenoid output (if on) and the ECM fan outputs. After the timer expires, the compressor contactor and ECM fan outputs are energized. If no jumper is installed, it changes the reversing valve with de-energizing the outputs immediately.
E47	50* 70 90 100	Seven position square pin header. E47 provides selection of the defrost terminate temperature based on the position of the selection jumper. The defrost termination temperature is measured by the defrost coil sensor. The jumper termination pin is factory set at 50°F (10°C). If the temperature jumper is not installed, the default termination temperature is 90°F (32°C). In addition, it provides selection points for enabling the field test mode.
W1	Short DS To R	Cut for Humiditrol (EDA) application. Use only in two-stage units.
* Factory default setting		

Field Control Wiring

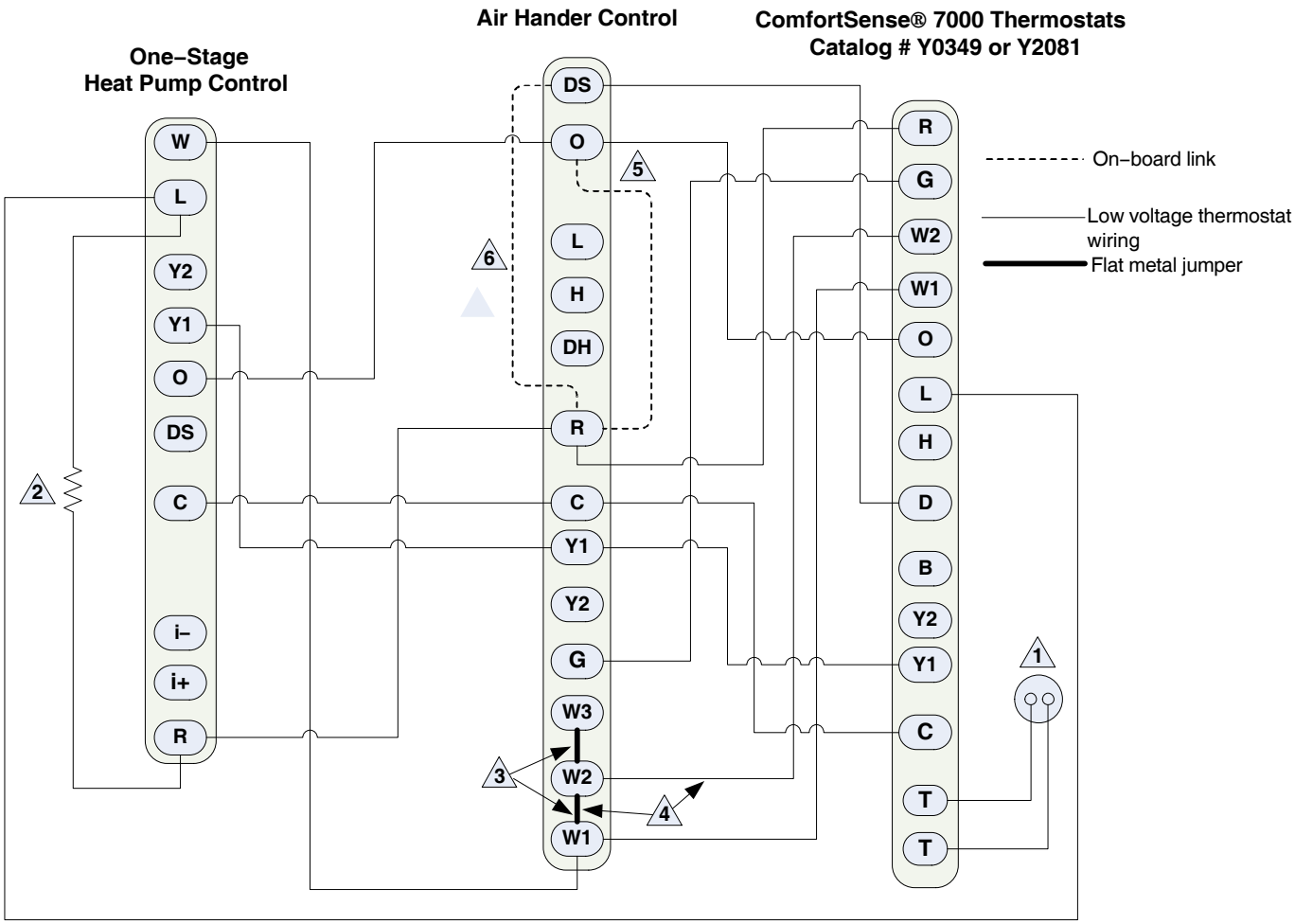

1. Thermostat **T** terminals are used for outdoor sensor input. Use for thermostat's outdoor temperature display (optional).
2. **R** to **L** connection is required for this model when using the ComfortSense® 7000 - catalog number Y0349 only. Resistor Kit (catalog number 47W97) required and ordered separately.
3. Air handler control ships from factory with metal jumpers installed across **W1**, **W2** and **W3**. For one-stage electric heat, do not remove factory installed metal jumpers.
4. Air handler control ships from factory with metal jumpers installed across **W1**, **W2** and **W3**. For two-stage electric heat, remove factory installed metal jumper between **W1** to **W2.** Then connect thermostat wire between the air handler control's **W2** and the thermostat's **W2** terminal.
5. Cut on-board link (clippable wire) from **R-O HEAT PUMP** for heat pump applications.
6. Cut on-board link (clippable wire) **DS-R** for Humiditrol® or Harmony III™ applications. This will slow the indoor blower motor to the lowest speed setting. See air handler installation instruction or engineering handbook for lowest fan speed information.

Figure 17. ComfortSense® 7000 Series Thermostat — Air Hander/One-Stage Heat Pump

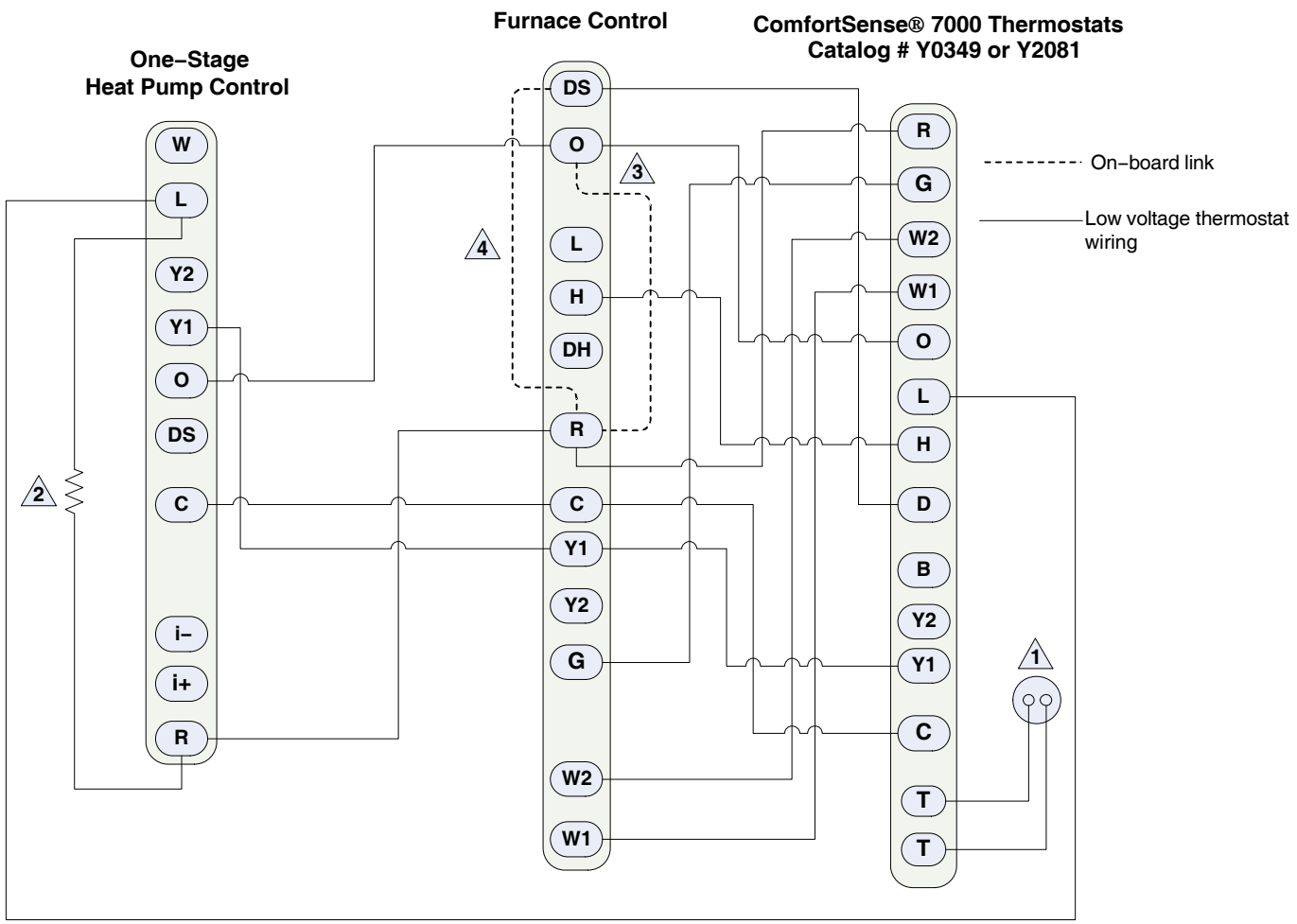

1. Thermostat **T** terminals are used for outdoor sensor input. Use for thermostat's outdoor temperature display (optional).
2. **R** to **L** connection is required for this model when using the ComfortSense® 7000 - catalog number Y0349 only. Resistor Kit (catalog number 47W97) required and ordered separately.
3. Cut on-board link **W951** (clippable wire) from **R-O HEAT PUMP** for heat pump applications.
4. Cut on–board link (clippable wire) **DS–R** for Humiditrol® or Harmony III™ applications. This will slow the indoor blower motor to the lowest speed setting. See furnace installation instruction or engineering handbook for lowest fan speed information.

NOTE - For defrost temper with furnace, the optional 67M41 temper kit would be wired between W of from the heat pump control (A175) to the W1 of the furnace control. The kit allows for the furnace to cycle on and off during a defrost. It protects the compressor from high refrigeration pressures during defrost.

Figure 18. ComfortSense® 7000 Series Thermostat — Furnace/One-Stage Heat Pump

Servicing Units Delivered Void of Charge

If the outdoor unit is void of refrigerant, clean the system using the procedure described below.

1. Leak check system using procedure outlined on page 18.
2. Evacuate the system using procedure outlined on page 19.
3. Use nitrogen to break the vacuum and install a new filter drier in the system.
4. Evacuate the system again using procedure outlined on page 19.
5. Weigh in refrigerant using procedure outlined in figure 21.
6. Monitor the system to determine the amount of moisture remaining in the oil. It may be necessary to replace the filter drier several times to achieve the required dryness level. **If system dryness is not verified, the compressor will fail in the future.**

Unit Start-Up

⚠ IMPORTANT

If unit is equipped with a crankcase heater, it should be energized 24 hours before unit start-up to prevent compressor damage as a result of slugging.

1. Rotate fan to check for binding.
2. Inspect all factory- and field-installed wiring for loose connections.
3. After evacuation is complete, open both the liquid and vapor line service valves to release the refrigerant charge contained in outdoor unit into the system.
4. Replace the stem caps and tighten to the value listed in table 1.
5. Check voltage supply at the disconnect switch. The voltage must be within the range listed on the unit's nameplate. If not, do not start the equipment until you have consulted with the power company and the voltage condition has been corrected.
6. Set the thermostat for a cooling demand. Turn on power to the indoor indoor unit and close the outdoor unit disconnect switch to start the unit.
7. Recheck voltage while the unit is running. Power must be within range shown on the nameplate.
8. Check system for sufficient refrigerant by using the procedures listed under *System Refrigerant.*

System Refrigerant

This section outlines procedures for:

1. Connecting gauge set for testing and charging (see figure 19.
2. Checking and adjusting indoor airflow as described in figure 20.
3. Add or remove refrigerant using the weigh in method provided in figure 21, and verifying charge using subcooling method described in figure 22.

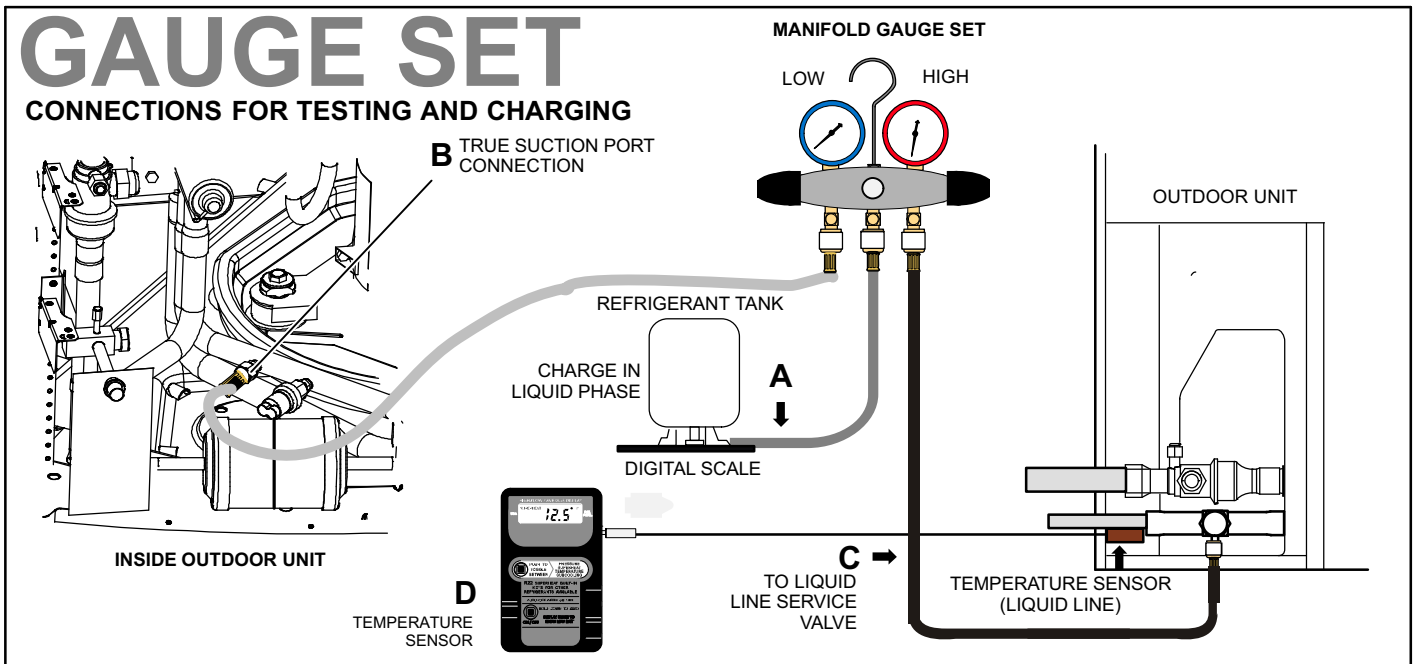

A Close manifold gauge set valves and connect the center hose to a cylinder of HFC-410A. Set for liquid phase charging.

B Connect the manifold gauge set's low pressure side to the true suction port.

C Connect the manifold gauge set's high pressure side to the liquid line service port.

D Position temperature sensor on liquid line near liquid line service port.

Figure 19. Gauge Set Connections

ADDING OR REMOVING REFRIGERANT

This system uses HFC-410A refrigerant which operates at much higher pressures than HCFC-22. The pre-installed liquid line filter drier is approved for use with HFC-410A only. Do not replace it with components designed for use with HCFC-22.

COOLING MODE INDOOR AIRFLOW CHECK

Check airflow using the Delta-T (DT) process using the illustration in figure 20.

HEATING MODE INDOOR AIRFLOW CHECK

Blower airflow (CFM) may be calculated by energizing electric heat and measuring:

- Temperature rise between the return air and supply air temperatures at the indoor coil blower unit,
- Measuring voltage supplied to the unit,
- Measuring amperage being drawn by the heat unit(s).

Then, apply the measurements taken in following formula to determine CFM:

$$\text{CFM} = \frac{\text{Amps x Volts x 3.41}}{\text{1.08 x Temperature rise (F)}}$$

AIRFLOW INDOOR COIL

TEMPERATURE OF AIR ENTERING INDOOR COIL °F (DRY-BULB)	DT													
80	24	24	24	23	23	22	22	22	20	19	18	17	16	15
78	23	23	23	22	22	21	21	20	19	18	17	16	15	14
76	22	22	22	21	21	20	19	19	18	17	16	15	14	13
74	21	21	21	20	19	19	18	17	16	16	15	14	13	12
72	20	20	19	18	17	17	16	15	15	14	13	12	11	10
70	19	19	18	18	17	17	16	15	15	14	13	12	11	10
WET-BULB °F	57	58	59	60	61	62	63	64	65	66	67	68	69	70

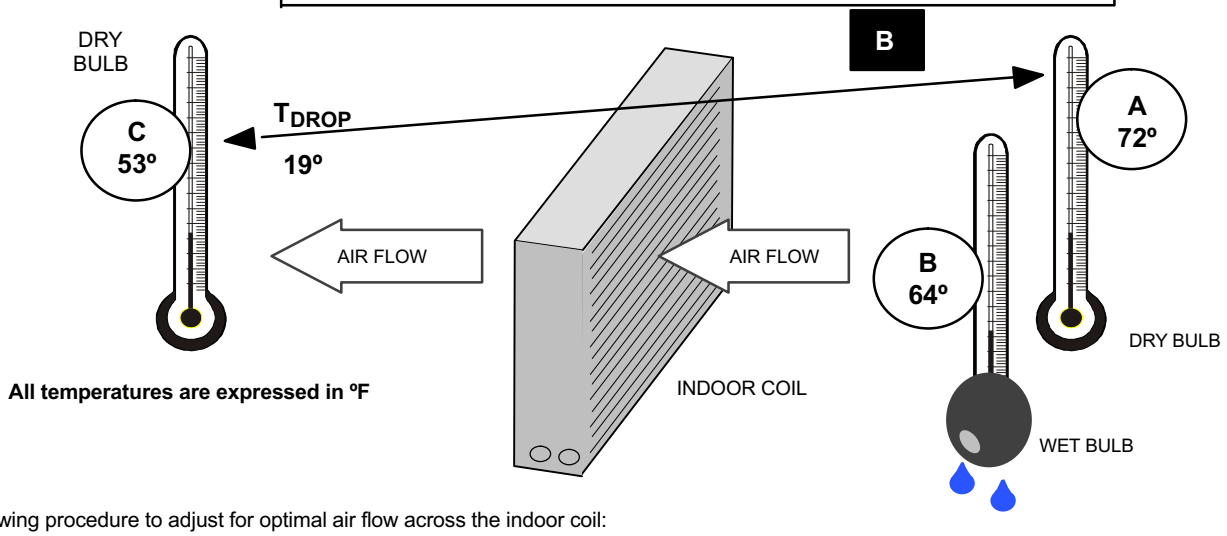

All temperatures are expressed in ºF

Use the following procedure to adjust for optimal air flow across the indoor coil:

1. **DETERMINE THE DESIRED DT** — MEASURE ENTERING AIR TEMPERATURE USING DRY BULB (**A**) AND WET BULB (**B**). **DT** IS THE INTERSECTING VALUE OF **A** AND **B** IN THE TABLE (SEE TRIANGLE).
2. Find temperature drop across coil — Measure the coil's dry bulb entering and leaving air temperatures (**A** and **C**). Temperature Drop Formula: (T_{Drop}) = **A** minus **C**.
3. **Determine if fan needs adjustment** — If the difference between the measured T_{Drop} and the desired **DT** (T_{Drop}–**DT**) is within ±3º, no adjustment is needed. See example below:

ASSUME **DT** = 15 AND **A** TEMP. = 72º, THESE **C** TEMPERATURES WOULD NECESSITATE STATED ACTIONS:

C°	T_{DROP}	–	DT	=	°F	*ACTION*
53°	19	–	15	=	4	*INCREASE THE AIRFLOW*
58°	14	–	15	=	-1	*(WITHIN ±3º RANGE) NO CHANGE*
62°	10	–	15	=	-5	*DECREASE THE AIRFLOW*

Changing air flow affects all temperatures; recheck temperatures to confirm that the temperature drop and DT are within ±3º.

4. **ADJUST THE FAN SPEED** — See indoor unit instructions to increase/decrease fan speed.

Figure 20. Checking Indoor Airflow over Evaporator Coil using Delta-T Chart Formula

Use **WEIGH IN** method for adding initial refrigerant charge, and then use **SUBCOOLING** method for for verifying refrigerant charge.

WEIGH IN CHARGING METHOD

CALCULATING SYSTEM CHARGE FOR OUTDOOR UNIT VOID OF CHARGE

If the system is void of refrigerant, first, locate and repair any leaks and then weigh in the refrigerant charge into the unit. To calculate the total refrigerant charge:

Amount specified on nameplate		Adjust amount. for variation in line set length listed on line set length table below.		Additional charge specified per indoor unit match-ups starting on page 30.		Total Charge
_____	±	_____	+	_____	=	_____

Refrigerant Charge per Line Set Length

LIQUID LINE SET DIAMETER	OUNCES PER 5 FEET (G PER 1.5 M) ADJUST FROM 15 FEET (4.6 M) LINE SET*
3/8" (9.5 MM)	3 OUNCE PER 5' (85 G PER 1.5 M)

*If line length is greater than 15 ft. (4.6 m), add this amount. If line length is less than 15 ft. (4.6 m), subtract this amount.

NOTE — Insulate liquid line when it is routed through areas where the surrounding ambient temperature could become higher than the temperature of the liquid line or when pressure drop is equal to or greater than 20 psig.

NOTE — The above nameplate is for illustration purposes only. Go to actual nameplate on outdoor unit for charge information.

Figure 21. Using HFC-410A Weigh In Method

SUBCOOLING CHARGING METHOD

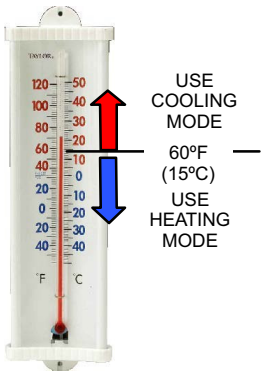

SATº _____
LIQº – _____
SCº = _____

1. Check the airflow as illustrated in figure 20 to be sure the indoor airflow is as required. (Make any air flow adjustments before continuing with the following procedure.)
2. Measure outdoor ambient temperature; determine whether to use **cooling mode** or **heating mode** to check charge.
3. Connect gauge set.
4. Check liquid and vapor line pressures. Compare pressures with either heat or cooling mode normal operating pressures in table 10, Normal Operating Pressures, High Stage.

   NOTE — The reference table is a general guide. Expect minor pressure variations. Significant differences may mean improper charge or other system problem.
5. Set thermostat for heat/cool demand, depending on mode being used:

   USING COOLING MODE — When the outdoor ambient temperature is 60°F (15°C) and above. Target subcooling values (second stage - high capacity) in table 10 are based on 70 to 80°F (21-27°C) indoor return air temperature; if necessary, operate heating to reach that temperature range; then set thermostat to cooling mode setpoint to 68ºF (20ºC) which should call for second-stage (high stage) cooling. When pressures have stabilized, continue with Step 6.

   USING HEATING MODE — When the outdoor ambient temperature is below 60°F (15°C). Target subcooling values (second-stage - high capacity) in table 10 are based on 65-75°F (18-24°C) indoor return air temperature; if necessary, operate cooling to reach that temperature range; then set thermostat to heating mode setpoint to 77ºF (25ºC) which should call for second-stage (high stage) heating. When pressures have stabilized, continue with Step 6.
6. Read the liquid line temperature; record in the LIQº space.
7. Read the liquid line pressure; then find its corresponding temperature in the temperature/ pressure chart listed in table 11 and record it in the SATº space.
8. Subtract LIQº temperature from SATº temperature to determine subcooling; record it in SCº space.
9. Compare SCº results with tables 4 through 9, being sure to note any additional charge for line set and/or match-up.
10. If subcooling value is greater than shown in tables 4 through 9 for the applicable unit, remove refrigerant; if less than shown, add refrigerant.
11. If refrigerant is added or removed, repeat steps 5 through 6 to verify charge.
12. Disconnect gauge set and re-install both the liquid and suction service valve caps.

Figure 22. Using HFC-410A Subcooling Method — High Stage (High Capacity)

Air Handler / Coil Match ups and Targeted Subcooling Values

Listed below are the targeted subcooling and charging values for approved indoor unit air handler / coil match ups. This information is also listed on the unit charging sticker located on the access panel.

* Indicates amount of charge required in additional to charge shown on unit nameplate. Remember to consider line set length differences.

Table 4. XP17-024

INDOOR MATCHUPS	Target Subcooling Heat (±5ºF)	Target Subcooling Cool (±1ºF)	*Add charge lb	*Add charge oz
CBX27UH-024	16	3	1	6
CBX27UH-030	16	5	1	9
CBX32M-030	16	3	1	6
CBX32M-036	16	5	1	9
CBX32MV-024/030	16	3	1	6
CBX32MV-036	16	5	1	9
CBX40UHV-024, -030, -036	16	5	1	9
CH23-51	16	3	1	6
CH33-31	16	3	0	11
CH33-42	16	3	0	11
CR33-48	28	3	0	0
CX34-31	16	3	1	6
CX34-38	16	5	1	9

Table 5. XP17-030

INDOOR MATCHUPS	Target Subcooling Heat (±5ºF)	Target Subcooling Cool (±1ºF)	*Add charge lb	*Add charge oz
CBX27UH-030, -036	15	5	1	3
CBX32M-030	19	5	1	7
CBX32M-036	15	5	1	3
CBX32MV-024/030	19	5	1	7
CBX32MV-036	15	5	1	3
CBX40UHV-024, -030, -036	15	5	1	3
CH23-51	19	5	1	7
CH33-31	19	5	1	7
CH33-42	19	5	1	7
CR33-48	30	4	0	0
CX34-31	19	5	1	7
CX34-38	15	5	1	3
CX34-43	6	4	0	11
CX34-44/48B	15	5	1	3
CX34-49	8	8	1	14
CX34-50/60C	6	4	0	11

Table 6. XP17-036

INDOOR MATCHUPS	Target Subcooling Heat (±5ºF)	Target Subcooling Cool (±1ºF)	*Add charge lb	*Add charge oz
CBX27UH-036	19	7	1	1
CBX27UH-042	12	5	2	4
CBX32M-036, -042	19	7	1	1
CBX32M-048	12	5	2	4
CBX32MV-036	19	7	1	1
CBX32MV-048	12	5	2	4
CBX40UHV-036	19	7	1	1
CBX40UHV-042, -048	12	5	2	4
CH23-51	19	7	0	10
CH33-42, -43	18	6	1	4
CH33-44/48B	18	6	1	4
CH33-48C	18	6	1	4
CR33-48	32	4	0	0
CX34-38	19	7	1	1
CX34-43	18	6	1	4
CX34-44/48B	19	7	1	1
CX34-49	9	9	2	8
CX34-50/60C	18	6	1	4

Table 7. XP17-042

INDOOR MATCHUPS	Target Subcooling Heat (±5ºF)	Target Subcooling Cool (±1ºF)	*Add charge lb	*Add charge oz
CBX27UH-042, -048	12	4	1	0
CBX32M-048	12	4	1	0
CBX32MV-048	12	4	1	0
CBX40UHV-042, -048	12	4	1	0
CH23-51	17	7	0	0
CH33-43	14	4	0	0
CH33-44/48B, -48C, -49C	14	4	0	0
CH33-50/60C	14	4	0	0
CR33-48	36	4	0	0
CR33-50/60	11	6	0	8
CX34-38	19	6	0	6
CX34-43	14	4	0	0
CX34-44/48B	19	6	0	6
CX34-49	8	7	1	0
CX34-50/60C	14	4	0	0

Table 8. XP17-048

INDOOR MATCHUPS	Target Subcooling Heat (±5ºF)	Target Subcooling Cool (±1ºF)	*Add charge lb	*Add charge oz
CBX27UH-048	23	3	0	2
CBX27UH-060	15	8	2	8
CBX32M-048	23	3	0	2
CBX32M-060	20	5	1	0
CBX32MV-048	23	3	0	2
CBX32MV-060	20	5	1	0
CBX32MV-068	15	5	1	7
CBX40UHV-048	23	3	0	2
CBX40UHV-060	20	5	1	0
CH23-68	15	8	2	8
CH33-49C	20	5	1	0
CH33-50/60C	20	5	1	0
CH33-60D	25	4	0	0
CH33-62D	15	5	1	7
CR33-50/60, -60D	21	4	0	0
CX34-49	15	6	1	0
CX34-60D	25	4	0	0
CX34-62C, -62D	11	4	1	5

Table 9. XP17-060

INDOOR MATCHUPS	Target Subcooling Heat (±5ºF)	Target Subcooling Cool (±1ºF)	*Add charge lb	*Add charge oz
CBX27UH-048	14	3	0	0
CBX27UH-060	15	8	1	8
CBX32M-048	14	3	0	0
CBX32M-060	16	3	0	12
CBX32MV-048	14	3	0	0
CBX32MV-060	16	3	0	12
CBX32MV-068	13	5	0	15
CBX40UHV-048	14	3	0	0
CBX40UHV-060	16	3	0	12
CH23-68	18	8	1	8
CH33-49C	16	3	0	12
CH33-50/60C	16	3	0	12
CH33-62D	13	5	0	15
CR33-50/60, -60D	21	4	0	0
CX34-49	16	3	0	12
CX34-60D	13	5	0	15
CX34-62C, -62D	13	5	0	15

Operating and Temperature Pressures

Minor variations in these pressures may be expected due to differences in installations. Significant differences could mean that the system is not properly charged or that a problem exists with some component in the system. The normal operating pressures listed here are also located on the unit charging sticker located on the unit access panel.

Table 10. Normal Operating Pressure - Liquid ±10 and Vapor ±5 PSIG*

⚠ IMPORTANT

Use this table to perform maintenance checks; it is not a procedure for charging the system. Minor variations in these pressures may be due to differences in installations. Significant deviations could mean that the system is not properly charged or that a problem exists with some component in the system.

Model	XP17-024		XP17-030		XP17-036		XP17-042		XP17-048		XP17-060	
Heating Operation												
°F (°C)**	**Liquid**	**Vapor**	**Liquid**	**Vapor**	**Liquid**	**Vapor**	**Liquid**	**Vapor**	**Liquid**	**Vapor**	**Liquid**	**Vapor**
20 (-6.6)	291	65	303	63	280	60	288	59	324	63	330	58
30 (-1.1)	309	79	328	77	290	74	306	68	345	76	354	72
40 (4.4)	319	94	338	92	310	88	320	85	366	91	368	83
50 (10.0)	340	110	366	110	326	105	339	107	398	109	391	107
60 (15.5)	361	129	387	128	344	124	361	125	428	127	413	126
Cooling Operation												
65 (18.3)	233	143	234	137	227	137	234	138	240	136	238	133
70 21.1)	250	144	251	139	243	139	250	139	256	138	256	135
75 (23.9)	269	145	270	141	262	140	269	141	275	139	278	136
80 (26.7)	289	147	291	142	284	141	292	143	297	140	299	137
85 (29.4)	310	148	312	143	306	142	315	144	319	141	322	138
90 (32.2)	332	149	335	145	329	143	337	146	342	142	344	139
95 (35.0)	356	150	358	146	354	144	362	147	366	144	369	140
100 (37.8)	379	151	383	147	377	144	386	148	392	144	395	141
105 (40.6)	405	152	408	148	406	147	415	147	418	146	422	142
110 (43.3)	431	153	433	149	434	148	442	148	446	148	450	143
115 (46.1)	456	155	462	150	463	150	472	150	475	150	481	145

**These are most-popular-match-up pressures. Indoor match up, indoor air quality, and indoor load cause pressures to vary.*
***Temperature of the air entering the outdoor coil.*

Table 11. HFC-410A Temperature (°F) - Pressure (Psig)

°F	Psig	°F	Psig	°F	Psig	°F	Psig	°F	Psig	°F	Psig	°F	Psig	°F	Psig
32	100.8	48	137.1	63	178.5	79	231.6	94	290.8	110	365.0	125	445.9	141	545.6
33	102.9	49	139.6	64	181.6	80	235.3	95	295.1	111	370.0	126	451.8	142	552.3
34	105.0	50	142.2	65	184.3	81	239.0	96	299.4	112	375.1	127	457.6	143	559.1
35	107.1	51	144.8	66	187.7	82	242.7	97	303.8	113	380.2	128	463.5	144	565.9
36	109.2	52	147.4	67	190.9	83	246.5	98	308.2	114	385.4	129	469.5	145	572.8
37	111.4	53	150.1	68	194.1	84	250.3	99	312.7	115	390.7	130	475.6	146	579.8
38	113.6	54	152.8	69	197.3	85	254.1	100	317.2	116	396.0	131	481.6	147	586.8
39	115.8	55	155.5	70	200.6	86	258.0	101	321.8	117	401.3	132	487.8	148	593.8
40	118.0	56	158.2	71	203.9	87	262.0	102	326.4	118	406.7	133	494.0	149	601.0
41	120.3	57	161.0	72	207.2	88	266.0	103	331.0	119	412.2	134	500.2	150	608.1
42	122.6	58	163.9	73	210.6	89	270.0	104	335.7	120	417.7	135	506.5	151	615.4
43	125.0	59	166.7	74	214.0	90	274.1	105	340.5	121	423.2	136	512.9	152	622.7
44	127.3	60	169.6	75	217.4	91	278.2	106	345.3	122	428.8	137	519.3	153	630.1
45	129.7	61	172.6	76	220.9	92	282.3	107	350.1	123	434.5	138	525.8	154	637.5
46	132.2	62	175.4	77	224.4	93	286.5	108	355.0	124	440.2	139	532.4	155	645.0
47	134.6			78	228.0			109	360.0			140	539.0		

System Operations

⚠ IMPORTANT

Some scroll compressor have internal vacuum protector that will unload scrolls when suction pressure goes below 20 psig. A hissing sound will be heard when the compressor is running unloaded. Protector will reset when low pressure in system is raised above 40 psig. DO NOT REPLACE COMPRESSOR.

The heat pump control (A175) provides the following functions:

- Demand defrost algorithm
- Field-selectable defrost termination temperatures
- Internal switching of outputs
- Compressor anti-short-cycle delay.
- Five strikes lockout safety function
- High (S4) and low (S87) pressure switches
- Ambient (RT13), and coil temperatures (RT21) temperature monitoring and protection.

COMPRESSOR ANTI-SHORT CYCLE DELAY

The heat pump control protects the compressor from:

- Short cycling (five minutes) when there is initial power up
- Interruption in power to the unit
- Pressure or sensor trips
- Delay after Y1 demand is removed.

In non-communicating systems the delay is set for 300 seconds (five minutes) and can not be changed. To override timer when active or inactive, place a jumper on the field test pins between 1 and 2 seconds.

In communicating system, the icomfort Touch® thermostat has a separate built-in 5-minute non-adjustable short cycle protection.

Resetting Anti-Short Cycle Delay

The **FIELD TEST** pins (E33) on the heat pump control can be jumpered between 1 to 2 seconds to bypass delay.

HIGH (S4) AND LOW (S87) PRESSURE SWITCHES

The unit's pressure switches (LO PS - S87 and HI PS - S4) are factory-wired into the heat pump control on the LO-PS and HI-PS terminals, respectively.

Low Pressure Switch (LO-PS) — See figure 28 for low pressure switch sequence of operation.

High Pressure Switch (HI-PS) — See figure 29 for high pressure switch sequence of operation.

Pressure Switch Event Settings

The following pressures are the auto reset event value triggers for low and high pressure thresholds:

- **High Pressure** (auto reset) - trip at 590 psig; reset at 418.
- **Low Pressure** (auto reset) - trip at 25 psig; reset at 40.

COMPRESSOR PROTECTION — FIVE-STRIKE LOCKOUT SAFETY FUNCTION

The five-strike lockout safety function is designed to protect the unit's compressor from damage. The five-strike feature is used for high pressure (S4) and low (S87) pressure switch trips and **W** input fault or miswire.

Resetting Five-Strike Lockout

Once the condition has been rectified, power to the heat pump control's **R** terminal must be cycled OFF, or a jumper placed on the **FIELD TEST** pins between 1- to 2-seconds to reset the heat pump control.

Defrost System

The heat pump control (A175) measures differential temperatures to detect when the system is performing poorly because of ice build-up on the outdoor coil. The controller self-calibrates (see figure 26) when the defrost system starts and after each system defrost cycle. The heat pump control monitors ambient temperature, outdoor coil temperature, and total run-time to determine when a defrost cycle is required. The coil temperature sensor is designed with a spring clip to allow mounting to the outside coil tubing. The location of the coil sensor is important for proper defrost operation (see figure 1 for location of coil sensor).

NOTE - The heat pump control accurately measures the performance of the system as frost accumulates on the outdoor coil. This typically will translate into longer running time between defrost cycles as more frost accumulates on the outdoor coil before the heat pump control initiates defrost cycles.

DEFROST OPERATING MODES

The heat pump control board has three operational modes which are:

- Defrost calibration and operation (see figure 26)
- Defrost test (see figure 27)

DEFROST TERMINATION TEMPERATURES (E47)

The heat pump control selections are: 50, 70, 90, and 100°F (10, 21, 32 and 38°C). The jumper termination pin is factory set at **50°F (10°C)**.

If the temperature jumper is **not installed**, the default termination temperature is **90°F (32°C)**. See figure 26 for on how this settings affects defrost calibration and defrost modes.

NOTE - Colder climates could require a high discharge termination temperature setting to maintain a clear coil.

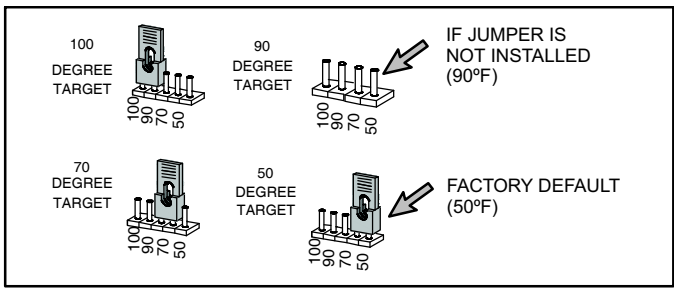

Figure 23. Defrost Termination Temperature Settings

UNIT SENSORS

Sensors connect to the heat pump control through a field-replaceable harness assembly that plugs into the control. Through the sensors, the heat pump control detects outdoor ambient and coil temperature fault conditions. As the detected temperature changes, the resistance across the sensor changes. table 13 shows how the resistance varies as the temperature changes for both type of sensors. Sensor resistance values can be checked by ohming across pins shown in table 12.

NOTE — When checking the ohms across a sensor, be aware that a sensor showing a resistance value that is not within the range shown in table 12, may be performing as designed. However, if a shorted or open circuit is detected, then the sensor may be faulty and the sensor harness will need to be replaced.

Ambient Temperature Sensor (RT13)

See table 12 for sensor range. If the ambient sensor is detected as being open, shorted or out of the temperature range of the sensor, the heat pump control will not perform demand defrost operation. The heat pump control will revert to time/temperature defrost operation and will display the appropriate alert code. Heating and cooling operation will be allowed in this fault condition.

Coil Temperature Sensor (RT21)

See table 12 for sensor range. If the defrost coil sensor is open, shorted or out of the temperature range of the sensor, the heat pump control will not perform demand or time/temperature defrost operation and will display the appropriate fault code. Heating and cooling operation will be allowed in this fault condition.

High Discharge Line Temperature Sensor

This model does not use a high discharge line temperature sensor. The cable assembly attached to the heat pump control's E30 connection has a 10K resister installed between pins 1 and 2 as illustrated in figure 24. No alerts or alarms would be generated if resistor is damage.

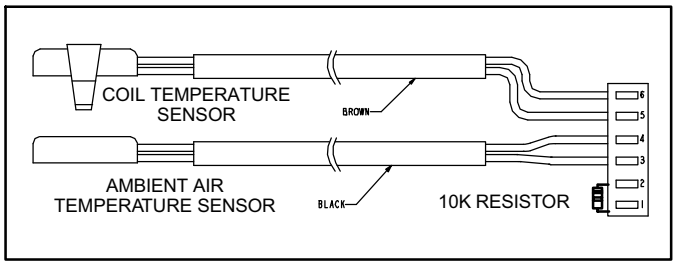

Figure 24. 10k Resistor Location

Table 12. Sensor Temperature / Resistance Range

Sensor	Temperature Range °F (°C)	Resistance values range (ohms)	Pins/Wire Color
Outdoor (Ambient)	-40 (-40) to 140 (60)	280,000 to 3750	3 and 4 (Black)
Coil			5 and 6 (Brown)
NOTE — Sensor resistance decreases as sensed temperature increases (see table 13).			

W Input Fault or Miswire

In case of a W input fault or possible miswire, the system will function as listed in the sequence of operation in figure 30.

Shift Delay (E37)

The heat pump control has a field-selectable function to reduce occasional sounds that may occur while the unit is cycling in and out of the defrost mode. When a jumper is installed on the DELAY pins (E37), the compressor will be cycled off for 30 seconds going in and out of the defrost mode. Units are shipped with jumper installed on DELAY pins.

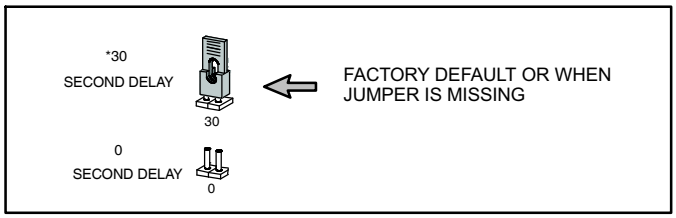

Figure 25. Shift Delay Settings

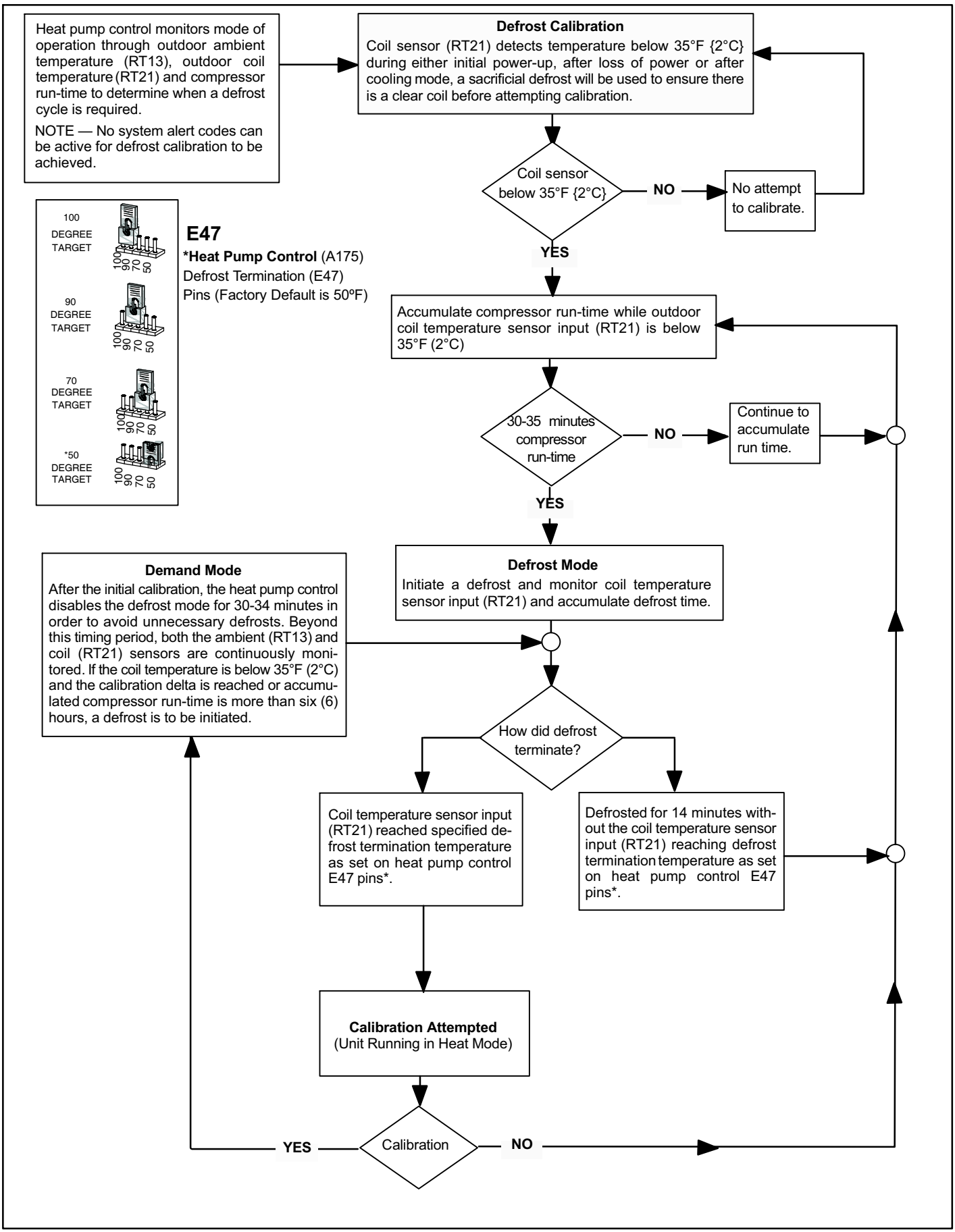

Figure 26. Defrost Calibration Sequence of Operations

MULTI-FUNCTION TEST PINS (E33)

Placing the jumper on the field test pins (E33) using a specific sequence allows the technician to:

- Clear short cycle lockout
- Clear five-strike fault lockout
- Cycle the unit in and out of defrost mode
- Manually place the unit in defrost mode to clear the coil

When **Y1** is energized and 24V power is being applied to the heat pump control (A175), a test cycle can be initiated by placing a jumper on the heat pump control's **TEST** pins for 2 to 5 seconds. If the jumper remains on the **TEST** pins (E33) for longer than five seconds, the heat pump control will ignore the jumpered TEST pins and revert to normal operation.

The heat pump control will initiate one test event each time a jumper is placed on the TEST pins. For each TEST the jumper must be removed for at least one second and then reapplied.

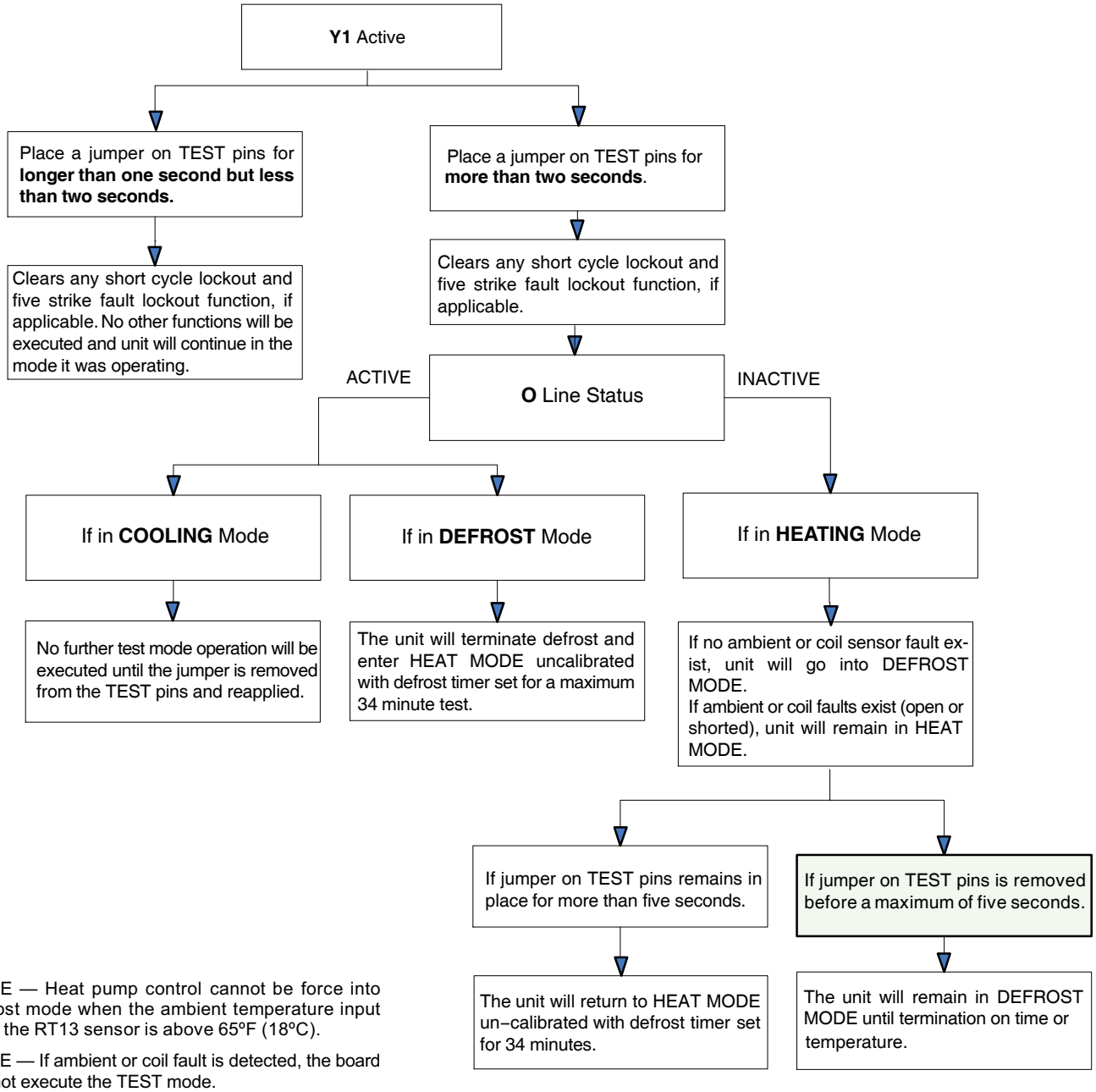

NOTE — Heat pump control cannot be force into defrost mode when the ambient temperature input from the RT13 sensor is above 65ºF (18ºC).

NOTE — If ambient or coil fault is detected, the board will not execute the TEST mode.

Figure 27. Test Pin (E33) Functions

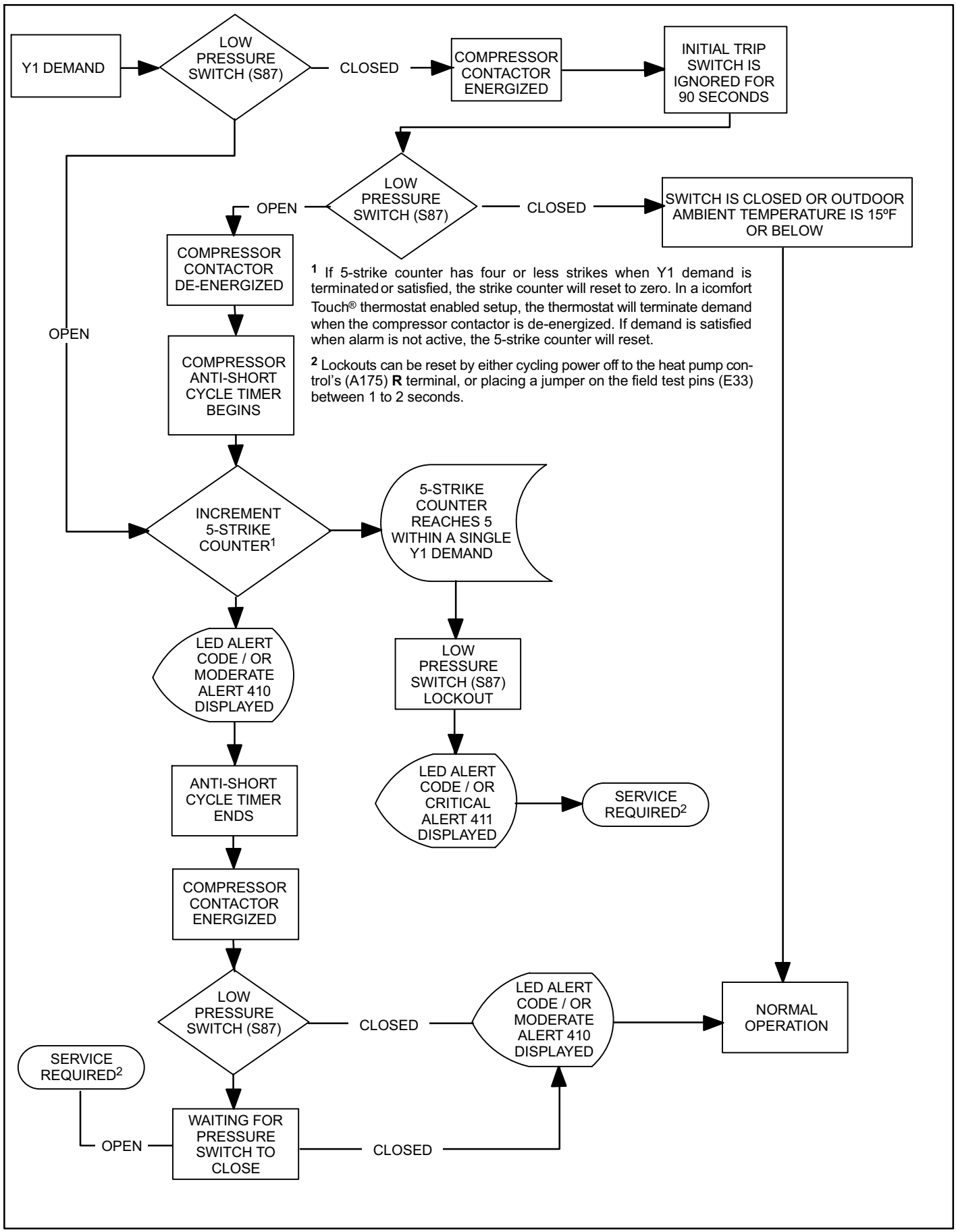

1 If 5-strike counter has four or less strikes when Y1 demand is terminated or satisfied, the strike counter will reset to zero. In a icomfort Touch® thermostat enabled setup, the thermostat will terminate demand when the compressor contactor is de-energized. If demand is satisfied when alarm is not active, the 5-strike counter will reset.

2 Lockouts can be reset by either cycling power off to the heat pump control's (A175) **R** terminal, or placing a jumper on the field test pins (E33) between 1 to 2 seconds.

Figure 28. Low Pressure (S87) Switch Operation

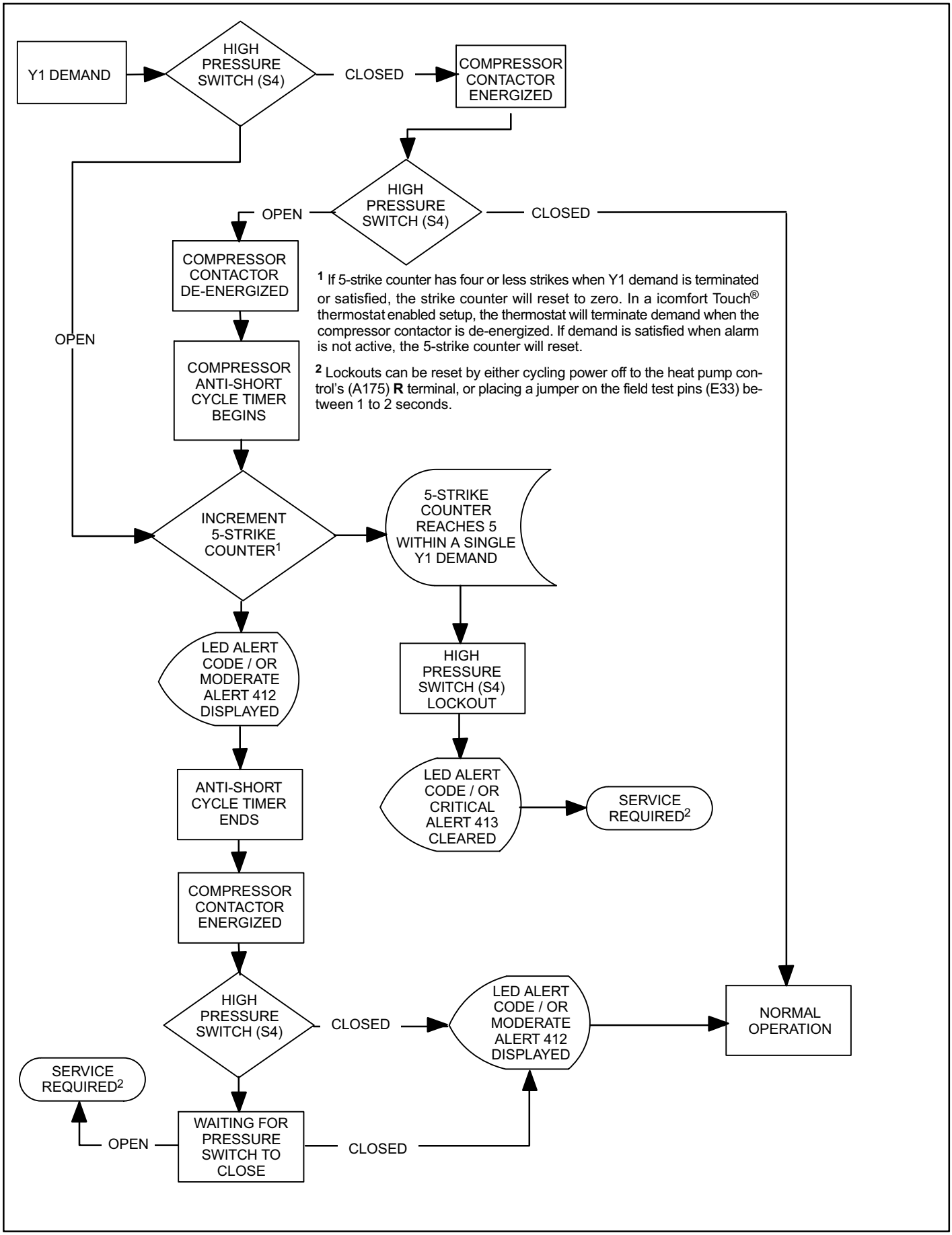

1 If 5-strike counter has four or less strikes when Y1 demand is terminated or satisfied, the strike counter will reset to zero. In a icomfort Touch® thermostat enabled setup, the thermostat will terminate demand when the compressor contactor is de-energized. If demand is satisfied when alarm is not active, the 5-strike counter will reset.

2 Lockouts can be reset by either cycling power off to the heat pump control's (A175) **R** terminal, or placing a jumper on the field test pins (E33) between 1 to 2 seconds.

Figure 29. High Pressure Switch (S4) Sequence of Operation

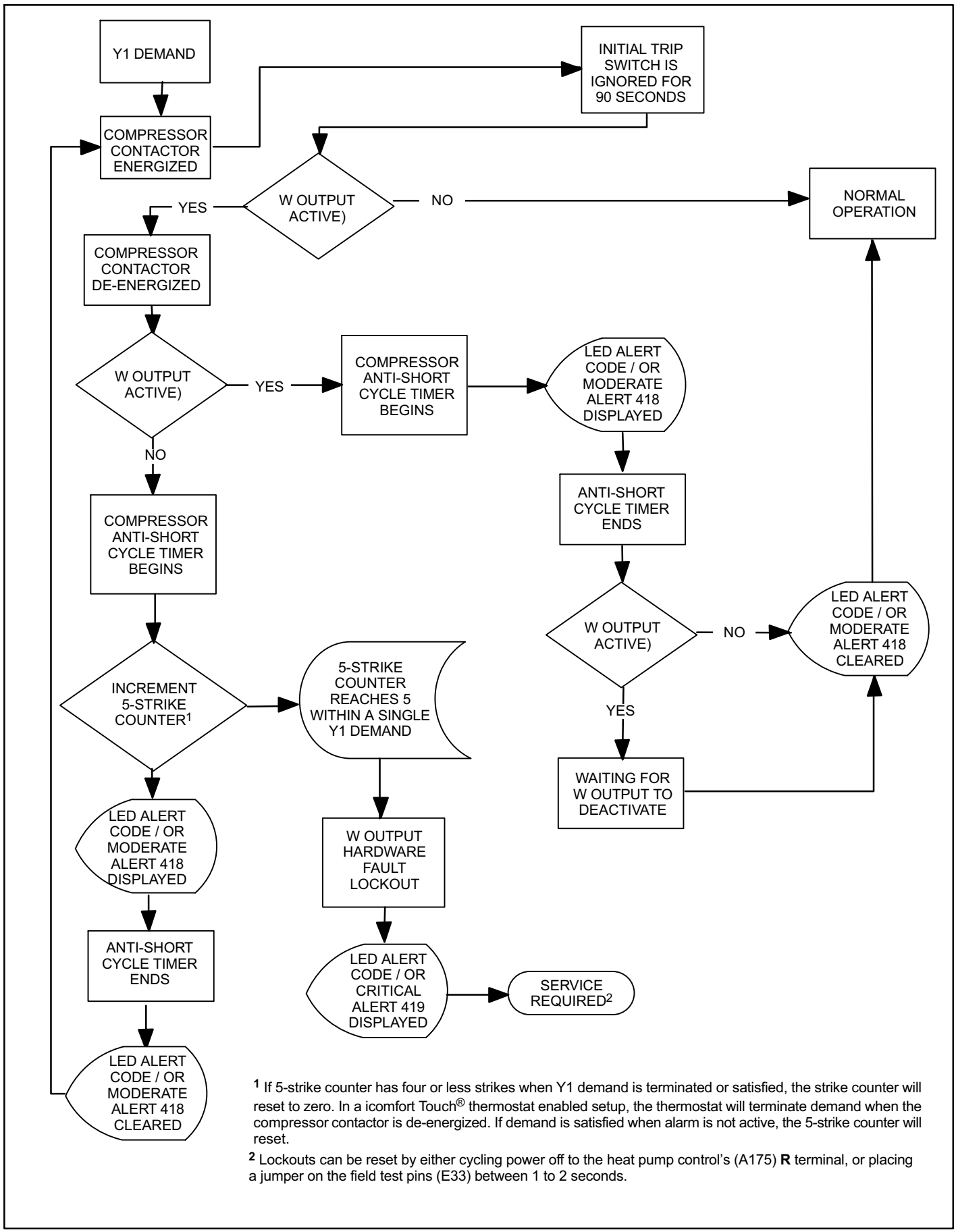

[1] If 5-strike counter has four or less strikes when Y1 demand is terminated or satisfied, the strike counter will reset to zero. In a icomfort Touch® thermostat enabled setup, the thermostat will terminate demand when the compressor contactor is de-energized. If demand is satisfied when alarm is not active, the 5-strike counter will reset.

[2] Lockouts can be reset by either cycling power off to the heat pump control's (A175) **R** terminal, or placing a jumper on the field test pins (E33) between 1 to 2 seconds.

Figure 30. W Input Fault or Miswire

Table 13. Ambient (RT13) and Coil (RT21) Sensors Temperature / Resistance Range

Degrees Fahrenheit	Resistance	Degrees Fahrenheit	Resistance	Degrees Fahrenheit	Resistance	Degrees Fahrenheit	Resistance
136.3	2680	56.8	16657	21.6	44154	-11.3	123152
133.1	2859	56.0	16973	21.0	44851	-11.9	125787
130.1	3040	55.3	17293	20.5	45560	-12.6	128508
127.3	3223	54.6	17616	20.0	46281	-13.2	131320
124.7	3407	53.9	17942	19.4	47014	-13.9	134227
122.1	3592	53.2	18273	18.9	47759	-14.5	137234
119.7	3779	52.5	18607	18.4	48517	-15.2	140347
117.5	3968	51.9	18945	17.8	49289	-15.9	143571
115.3	4159	51.2	19287	17.3	50074	-16.5	146913
113.2	4351	50.5	19633	16.8	50873	-17.2	150378
111.2	4544	49.9	19982	16.3	51686	-17.9	153974
109.3	4740	49.2	20336	15.7	52514	-18.6	157708
107.4	4937	48.5	20695	15.2	53356	-19.3	161588
105.6	5136	47.9	21057	14.7	54215	-20.1	165624
103.9	5336	47.3	21424	14.1	55089	-20.8	169824
102.3	5539	46.6	21795	13.6	55979	-21.5	174200
100.6	5743	46.0	22171	13.1	56887	-22.3	178762
99.1	5949	45.4	22551	12.5	57811	-23.0	183522
97.6	6157	44.7	22936	12.0	58754	-23.8	188493
96.1	6367	44.1	23326	11.5	59715	-24.6	193691
94.7	6578	43.5	23720	11.0	60694	-25.4	199130
93.3	6792	42.9	24120	10.4	61693	-26.2	204829
92.0	7007	42.3	24525	9.9	62712	-27.0	210805
90.6	7225	41.7	24934	9.3	63752	-27.8	217080
89.4	7444	41.1	25349	8.8	64812	-28.7	223677
88.1	7666	40.5	25769	8.3	65895	-29.5	230621
86.9	7890	39.9	26195	7.7	67000	-30.4	237941
85.7	8115	39.3	26626	7.2	68128	-31.3	245667
84.5	8343	38.7	27063	6.7	69281	-32.2	253834
83.4	8573	38.1	27505	6.1	70458	-33.2	262482
82.3	8806	37.5	27954	5.6	71661	-34.1	271655
81.2	9040	37.0	28408	5.0	72890	-35.1	281400
80.1	9277	36.4	28868	4.5	74147	-36.1	291774
79.0	9516	35.8	29335	3.9	75431	-37.1	302840
78.0	9757	35.2	29808	3.4	76745	-38.2	314669
77.0	10001	34.7	30288	2.8	78090	-39.2	327343
76.0	10247	34.1	30774	2.3	79465		
75.0	10496	33.5	31267	1.7	80873		
74.1	10747	33.0	31766	1.2	82314		
73.1	11000	32.4	32273	0.6	83790		
72.2	11256	31.9	32787	0.0	85302		
71.3	11515	31.3	33309	-0.5	86852		
70.4	11776	30.7	33837	-1.1	88440		
69.5	12040	30.2	34374	-1.7	90068		
68.6	12306	29.6	34918	-2.2	91738		
67.7	12575	29.1	35471	-2.8	93452		
66.9	12847	28.6	36031	-3.4	95211		
66.0	13122	28.0	36600	-4.0	97016		
65.2	13400	27.5	37177	-4.6	98870		
64.4	13681	26.9	37764	-5.2	100775		
63.6	13964	26.4	38359	-5.7	102733		
62.8	14251	25.8	38963	-6.3	104746		
62.0	14540	25.3	39577	-6.9	106817		
61.2	14833	24.8	40200	-7.5	108948		
60.5	15129	24.2	40833	-8.2	111141		
59.7	15428	23.7	41476	-8.8	113400		
59.0	15730	23.2	42130	-9.4	115727		
58.2	16036	22.6	42794	-10.0	118126		
57.5	16345	22.1	43468	-10.6	120600		

System Status, Fault and Lockout LED Codes

LED codes are displayed using various LEDs located on the heat pump control (A175). See figure 16 for locations of heat pump control LEDs.

DS11 AND DS14 — SYSTEM STATUS, FAULT AND LOCKOUT LED CODES

DS11 (Green) and DS14 (Red) LEDs indicate non-communicating mode diagnostics conditions that are listed in table 14.

These LEDs display the most common fault conditions in the system. When an abnormal condition is detected, this function communicates the specific condition through system LED alert codes The function is capable of detecting both mechanical and electrical system problems.

DS15 AND DS13 — COMPRESSOR FAULT AND LOCKOUT LED CODES

DS15 (Yellow) and DS13 (Red) LEDs indicate non-communicating mode diagnostics conditions that are listed in table 15.

These LEDs display the most common fault conditions in the system. When an abnormal condition is detected, this function communicates the specific condition through system LED alert codes The function is capable of detecting both mechanical and electrical system problems.

⚠ IMPORTANT

DS15 and DS13 compressor LED fault and lockout codes do not provide safety protection. The is a monitoring function only and cannot control or shut down other devices.

RESETTING FAULT AND LOCKOUT LED CODES

All LED fault and lockout codes can be reset manually or automatically:

1. **Manual Reset**

   Manual reset can be achieve by one of the following methods:

   - Disconnecting **R** wire from the heat pump control's **R** terminal.
   - Turning the indoor unit off an on again

   After power up, existing code will display for 60 seconds and then clear.

2. **Automatic Reset**

   After a fault or lockout is detected, the heat pump control continues to monitor the unit's system and compressor operations. When/if conditions return to normal, the alert code is turned off automatically.

Table 14. System Status, Fault and Lockout LED Codes and Related icomfort Touch® Thermostat Alert Codes

System fault and lockout LED (DS11 / DS14) alarm codes takes precedence over system status LED codes (cooling, heating stages or defrost/dehumidification).Only the latest active LED fault or lockout alarm code if present will be displayed. If no fault or lockout codes are active, then system status LEDs are routinely displayed. See notes 1 and 2 in table below for duration of fast / slow flashes and pause.

Heat Pump Control LEDs		icomfort Touch® Thermostat Display	Condition	Possible Cause(s)	Solution
DS11 Green	DS14 Red				
SYSTEM STATUS					
Off	Off	Not applicable	Power problem	1. No power (24V) to heat pump control terminal's R and C or heat pump control failure. 2. Heat pump control failure.	[1] Check control transformer power (24V). [2] If power is available to control and LED(s) do not light, replace the heat pump control.
Simultaneous slow flash		Not applicable	Normal operation	Unit operating normally or in standby mode.	
Alternating slow flash		Not applicable	5-minute anti-short cycle delay	Initial power up, safety trip, end of room thermostat demand.	None required (Jumper FIELD TEST (E33) pins to override)
Simultaneous fast flashes		Moderate / Critical Alert Code 180	Ambient sensor problem	If sensor detects an open, shorted or out-of-temperature range. heat pump control will revert to time/temperature defrost operation. System will still heat or cool.	
Alternating fast flash		Moderate / Critical Alert Code 417	Coil sensor problem	If the outdoor coil temperature sensor is detected as being open or shorted, the heat pump control will not perform defrost operations.	
On	On	Not applicable	Heat pump control failure	Indicates that heat pump control has an internal component failure. Cycle 24 volt power to heat pump control. If code does not clear, replace the heat pump control.	

System fault and lockout LED (DS11 / DS14) alarm codes takes precedence over system status LED codes (cooling, heating stages or defrost/dehumidification).Only the latest active LED fault or lockout alarm code if present will be displayed. If no fault or lockout codes are active, then system status LEDs are routinely displayed. See notes 1 and 2 in table below for duration of fast / slow flashes and pause.

Heat Pump Control LEDs		icomfort Touch® Thermostat Display	Condition	Possible Cause(s)	Solution
DS11 Green	DS14 Red				
Off	1 fast flash then pause	Not applicable	Single stage compressor heating	These are codes that show status of operation whether the system is operating in either in first or second stage heating or cooling operation, defrost or in the dehumidification modes.	
On	2 fast flashes then pause	Not applicable	Defrost		
1 fast flash then pause	Off	Not applicable	Single-stage compressor cooling		
2 fast flashes then pause	On	Not applicable	Dehumidification mode		
ALERT STATUS					
None		Moderate Alert Code 105	Device communication failure	icomfort Touch® thermostat is unable to communicate with any other device on the RSBus. Alarm only occurs if a specific device did communicate initially after power up and communication was later lost. Possible causes are lost connection, bus short or open, or other device stop responding.	
None		Moderate Alert Code 120	Unresponsive device	Message could be sent by any device on RSBus if expected response message is not received from other device. If sent by indoor or heat pump control, device did not get expected response (incorrect or no response at all) from active Subnet controller. If sent by the icomfort Touch® thermostat, and did not get the expected response (incorrect or no response at all) from device. Normally this indicate device malfunction.	
None		Critical Alert Code 124	Active subnet controller missing	Device lost connection to icomfort Touch® thermostat. Thermostat is sending heartbeat message in one minute intervals. Device sets this alarm if no Heartbeat is received for three minutes. Normally this indicate lost connection to thermostat, or thermostat is not working. Alert will clear after valid subnet controller message is received.	
None		Critical Alert Code 125	Hardware Failure	Entire or partial system failure. Alert will clear 300 seconds after fault has recovered.	
None		Moderate / Critical Alert Code 126	Internal control communication failure	Internal communication on heat pump control. Alert will clear 300 seconds after fault has recovered.	
None		Critical Alert Code 131	Corrupted control parameters	System stored configuration data is corrupted. System will not run.	
None		Critical Alert Code 132	Failed flash CRC check.	No operations, heat pump control enters boot loader mode. Alarm will clears after reset. Refer to communicating thermostat for memory corrupt handling.	
Off	Slow flash	Moderate Alert Code 410	Low pressure fault	1 Restricted air flow over indoor or outdoor coil. 2 Improper refrigerant charge in system. 3 Improper metering device installed or incorrect operation of metering device. 4 Incorrect or improper sensor location or connection to system.	1 Remove any blockages or restrictions from coils and/or fans. Check indoor and outdoor fan motor for proper current draws. 2 Check system charge using approach and sub-cooling temperatures. 3 Check system operating pressures and compare to unit charging charts. 4 Make sure all pressure switches and sensors have secure connections to system to prevent refrigerant leaks or errors in pressure and temperature measurements.
Off	On	Critical Alert Code 411	Low pressure switch lockout		
Slow flash	Off	Moderate Alert Code 412	High pressure fault		
On	Off	Critical Alert Code 413	High pressure switch lockout		

System fault and lockout LED (DS11 / DS14) alarm codes takes precedence over system status LED codes (cooling, heating stages or defrost/dehumidification).Only the latest active LED fault or lockout alarm code if present will be displayed. If no fault or lockout codes are active, then system status LEDs are routinely displayed. See notes 1 and 2 in table below for duration of fast / slow flashes and pause.

Heat Pump Control LEDs		icomfort Touch® Thermostat Display	Condition	Possible Cause(s)	Solution
DS11 Green	DS14 Red				
Slow flash	On	Moderate Alert Code 414	Discharge line temperature fault	This code indicates high discharge temperatures. If the discharge line temperature exceeds a temperature of 279ºF (137ºC) during compressor operation, the control will de-energize the compressor contactor output (and the defrost output if active). The compressor will remain off until the discharge temperature has dropped below 225ºF (107ºC).	
Fast flash	On	Critical Alert Code 415	Discharge line temperature lockout		
Off	Fast flash	Moderate / Critical Alert Code 417	Discharge sensor fault	The heat pump control (A175) detects open or short sensor or out of temperature sensor range. This fault is detected by allowing the unit to run for 90 seconds before checking sensor resistance. If the sensor resistance is not within range after 90 seconds, the control will raise the alarm.	
3 fast flashes then pause	Off	Moderate / Critical Alert Code 418	W output hardware fault	When auxiliary heat output is detected as active. Fault in the heat pump control. Replace heat pump control. See figure 30 for further details.	
3 fast flashes then pause	On	Moderate / Critical Alert Code 419	W output hardware fault lockout	If heat pump control recognizes five output hardware fault events during a single cooling demand, the heat pump control will initiate a lockout. See figure 30 for further details.	
Off	3 fast flashes then pause	Critical Alert Code 421	W external miswire fault	When auxiliary heat output is detected as active after compressor has been de-energized. See figure 30 for further details.	
Simultaneous fast flashes then pause		None	Second-stage heat lock-in	If the unit is in non-communicating mode and it goes to second stage due to ambient temperature being below second stage lock-in setting (E48).	
Fast simultaneous flashing of DS11, DS13, DS14 and DS15			OEM mode	Factory test mode.	

1. Pause duration is two (2) seconds.
2. Fast flash duration is 1/2 second. Slow flash duration is one (1) second.

Table 15. Compressor Fault and Lockout LED Codes and Related icomfort Touch® Thermostat Alert Codes

NOTE — See notes 1 and 2 in table below for duration of fast / slow flashes and pause.

Heat Pump Control LEDs		icomfort Touch® Thermostat Display	Condition	Possible Cause(s)	Solution	Clearing Status
DS15 Yellow	DS13 Red					
Off	On	Moderate/ Critical[3] Alert Code 400	Compressor internal overload trip	Thermostat demand signal Y1 is present, but compressor not running	[1] Compressor protector is open. • Check for high head pressure • Check compressor supply voltage [2] Outdoor unit power disconnect is open. [3] Compressor circuit breaker or fuse(s) is open. [4] Broken wire or connector is not making contact. [5] Low or high pressure switch open if present in the system. [6] Compressor contactor has failed to close.	Clears the error after current is sensed in the run and start winding for two seconds, service removed or power reset.
1 flash then pause	Off	Critical Alert Code 401	Long run time.	Compressor is running extremely long run cycles.	[1] Low refrigerant charge. [2] Evaporator blower is not running. • Check blower relay coil and contacts • Check blower motor capacitor • Check blower motor for failure or blockage • Check evaporator blower wiring and connectors • Check indoor blower control • Check thermostat wiring for open circuit [3] Evaporator coil is frozen. • Check for low suction pressure • Check for excessively low thermostat setting • Check evaporator airflow (coil blockages or return air filter) • Check ductwork or registers for blockage. [4] Faulty metering device. • Check TXV bulb installation (size, location and contact) • Check if TXV/fixed orifice is stuck closed or defective [5] Condenser coil is dirty· [6] Liquid line restriction (filter drier blocked if present)· [7] Thermostat is malfunctioning· • Check thermostat sub-base or wiring for short circuit • Check thermostat installation (location and level)	Clears the error after 30 consecutive normal run cycles, or after power reset.
2 flashes then pause	Off	Critical Alert Code 402	System pressure trip	Indicates the compressor protector is open or missing supply power to the compressor.	[1] High head pressure. • Check high pressure switch if present in system • Check if system is overcharged with refrigerant • Check for non-condensable in system [2] Condenser coil poor air circulation (dirty, blocked, damaged). [3] Condenser fan is not running. • Check fan capacitor • Check fan wiring and connectors • Check fan motor for failure or blockage [4] Return air duct has substantial leakage.	Clears after four consecutive normal compressor run cycles, or after power reset.
3 flashes then pause	Off	Moderate Alert Code 403	Short cycling	Compressor is running less than three minutes.	[1] Thermostat demand signal is intermittent. [2] Time delay relay or heat pump control is defective. [3] If high pressure switch is present, see flash code 2 information.	Clears after four consecutive normal compressor run cycles, or after power reset.

Heat Pump Control LEDs		icomfort Touch® Thermostat Display	Condition	Possible Cause(s)	Solution	Clearing Status
DS15 Yellow	DS13 Red					
4 flashes then pause	Off	Critical Alert Code 404	Locked rotor	Compressor has a locked out due to run capacitor short, bearings are seized, excessive liquid refrigerant.	[1] Run capacitor has failed. [2] Low line voltage (contact utility if voltage at disconnect is low). • Check wiring connections [3] Excessive liquid refrigerant in the compressor. [4] Compressor bearings are seized.	Clears after power reset or four normal compressor cycles.
5 flashes then pause	Off	Critical Alert Code 405	Open circuit	Compressor has an open circuit due to power disconnection, fuse is open or other similar conditions.	[1] Outdoor unit power disconnect is open. [2] Unit circuit breaker or fuse(s) is open. [3] Unit contactor has failed to close. • Check compressor contactor wiring and connectors • Check for compressor contactor failure (burned, pitted or open) • Check wiring and connectors between supply and compressor • Check for low pilot voltage at compressor contactor coil [4] High pressure switch is open and requires manual reset. [5] Open circuit in compressor supply wiring or connections. [6] Unusually long compressor protector reset time due to extreme ambient temperature. [7] Compressor windings are damaged. • Check compressor motor winding resistance	Clears after one normal compressor run cycle or power reset.
6 flashes then pause	Off	Critical Alert Code 406	Open start circuit	Current not sensed by Start transformer.	[1] Run capacitor has failed. [2] Open circuit in compressor start wiring or connections. • Check wiring and connectors between supply and the compressor **S** terminal [3] Compressor start winding is damaged. • Check compressor motor winding resistance	Clears when amperage is detected in RUN and START sensors, or after power reset.
7 flashes then pause	Off	Critical Alert Code 407	Open run circuit	Current not sensed by run transformer.	[1] Open circuit in compressor start wiring or connections. • Check wiring and connectors between supply and the compressor **R** terminal [2] Compressor start winding is damaged. • Check compressor motor winding resistance	Clears when amperage is detected in RUN and START sensors, or after power reset.
8 flashes then pause	Off	Critical Alert Code 408	Welded contactor	Compressor always runs	[1] Compressor contactor failed to open. [2] Thermostat demand signal not connected to module.	Clears after one normal compressor run cycle or after power reset.
9 flashes then pause	Off	Moderate/ Critical Alert[3] Code 409	Secondary low voltage	24VAC is below 18VAC.	[1] Control circuit transformer is overloaded. [2] Low line voltage (contact utility if voltage at disconnect is low). • Check wiring connections	Clears after voltage is higher than 20VAC for two seconds, or after power reset.
Fast simultaneous flashing of DS11, DS13, DS14 and DS15			OEM Mode	Factory test mode.		

1. Pause duration is two (2) seconds.
2. Fast flash duration is 1/2 second. Slow flash duration is one (1) second.
3. Initially a moderate status is displayed and is escalated to critical if alarm exists for more than 10 minutes.

Field Configuration and Testing

This section provides procedures for configuring, adjusting and testing various components of this unit.

- Fan Motor (B4) Testi Procedure
- Fan Motor Control (A177) Configuration and Testing
- Top Grille and Fan Motor Mounting Adjustment (Fan Clearance)
- Heat Pump Control (A175) Unit Nominal Capacity Code configuration

FAN MOTOR (B4) TEST PROCEDURE

The following procedure can be used to test the fan motor operation. A fully charged 9V battery will be required for this procedure. See figure 31 for complete test procedure.

FAN MOTOR CONTROL (A177) OPERATION, AND TROUBLESHOOTING

This section provides information concerning operation and testing of the fan control.

Fan Motor Control Sequence of Operation

During start up, the following sequence is followed:

1. Display error conditions (see table 17), if present.
2. If no errors are detected, the LED code indicating stage operation (see table 18) will display the applicable code and then a long pause.
3. The fan motor speed / RPM (revolutions per minute) indicator is displayed next (see table 16).
4. There is a short pause.

The above sequence will continue to repeat if a thermostat demand is present. See figure 32 for LED sequence and table 18 for description of flash and pause durations.

This is a test that will verify that the motor does operate.

1. Verify main (240 volt) power if **OFF** to unit.
2. Remove both wires (brown and black) from the J2 terminal on the fan motor control (A177).
3. Room thermostat should be in **OFF** position (unit in idle mode - no heating or cooling demands)
4. Turn main power (240 volt) **ON** to unit.
5. Connect 9 Volt battery to fan motor plugs as noted in picture below.
6. Fan motor should run at a reduced fan speed.
7. If fan motor does not run, then replace fan motor assembly.

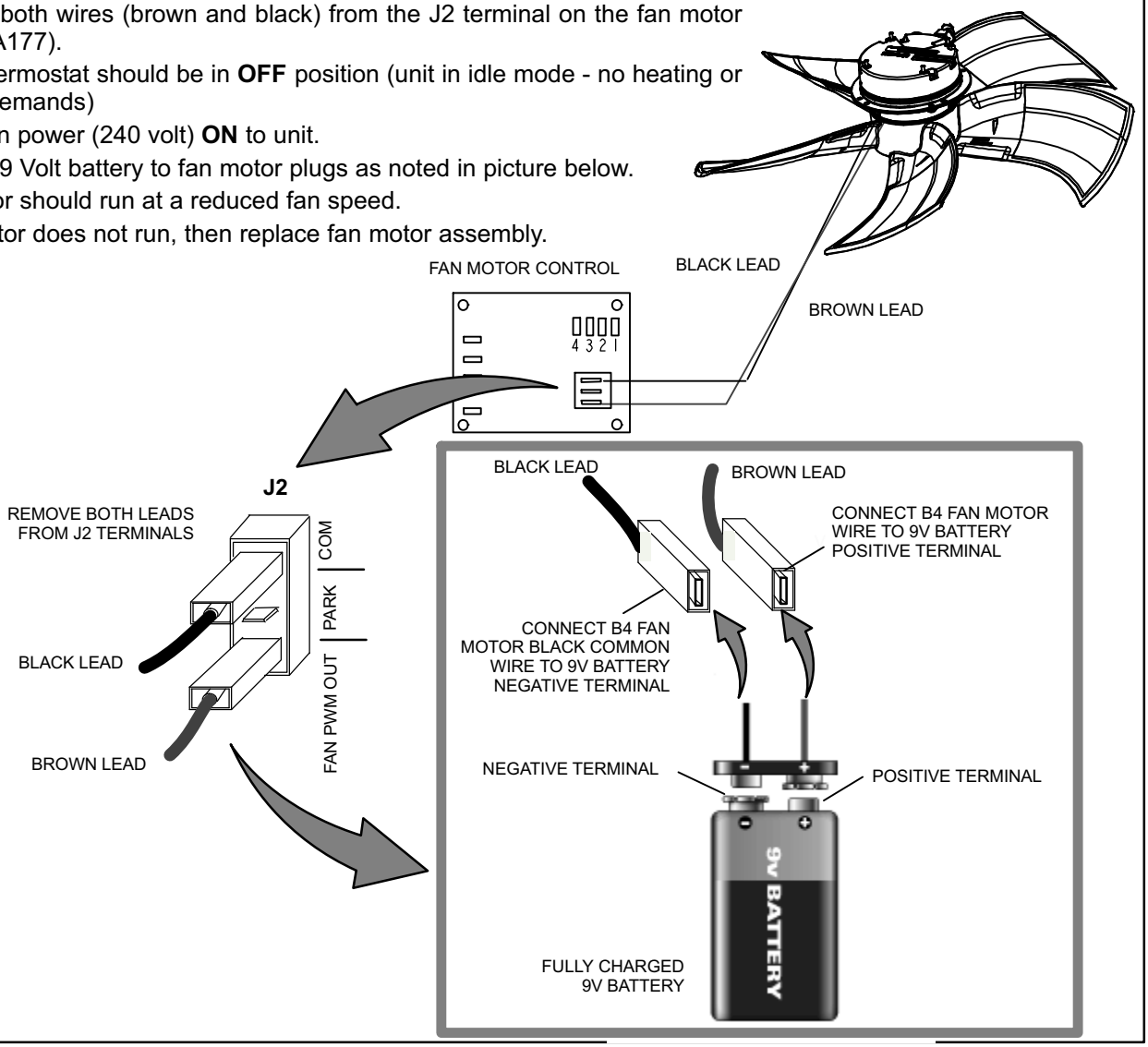

Figure 31. Fan Motor (B4) Test

Table 16. Fan Motor Control RPM, LED Code and DC Voltage Output

Model	LED Code*	CFM Profile Pin Select				ECM1/Y1	
		4	3	2	1	RPM	(J2) DC Volt
XP17-024	5	OFF	ON	ON	ON	400	12.7
XP17-030	6	OFF	ON	ON	OFF	450	14.3
XP17-036, -042	8	OFF	OFF	ON	ON	600	19.2
XP17-048, -060	9	OFF	OFF	OFF	ON	675	21.6

** LED Code indicates fan motor control LED flash sequence. For example, LED Code 9 indicates 9 slow flashes and pause.*

Table 17. Fan Motor Control Error/Fault LED Codes

Unit Status	Motor Control LED	Possible Cause
Mismatched RPM	Fast flash with no pause	Internal feedback, PWM does not match target
CRC Failure	Constant ON.	Microcontroller CRC failure

Table 18. 19. Fan Motor Control Stage LED Indicator Codes

Unit Status	Unit Status	Fan Motor Control LED
One Stage Operation	**Low Stage — ECM1/Y1 ONLY**	One slow flash, then short pause.

Table 20. Fan Motor Control Flash and Pause Durations

Flash or Pause State	Duration
Flash Flash	Three flashes per second
Slow Flash	One flash per second
Short Pause	Two seconds of OFF time
Long Pause	Five seconds of OFF time

Testing

Use the following subsections to verify and test the fan motor control (A177).

Verifying Jumper Settings (J2)

The unit is shipped from the factory with the default fan motor speed setting (in RPMs) required for each specific model. Use the table 16 verify that jumpers are set correctly for the specific unit.

Verifying LED Status Codes

During start up, the fan motor control (A177) LED will display any error conditions. If error conditions exist then no other codes will display. If no error conditions are present, then the stage status and and RPM indicator are displayed. Fan motor speeds are not adjustable for a single stage outdoor unit (see table 16).

Verifying Correct DC Output Voltage (J2)

The following three methods can be used to determine whether the fan motor (B4) is operating at the correct RPMs based on unit size.

1. Use the information provided in table 16 to verify that all four jumper terminals are set correctly for the specific size unit.
2. Verify LED RPM indicator is displaying the correct flash sequence for the applicable size unit (see table 18).
3. Test DC voltage output on the fan motor control's J2 terminals (see figure 34) while under full load and verify the voltage read to the voltage listed in table 16 for the applicable size unit.
4. If no voltage is detected at the **J2** terminals, verify there is a Y1 demand at the thermostat and applicable voltages detected all fan motor control (A177) voltage inputs, see table 21.

If there is a demand, proceed to the next section for further testing.

Verifying Correct Input Voltage (ECM/Y1, ECM/Y2, ECM C and EXT ECM/R)

Using a voltmeter, check voltages on the following fan motor control inputs using table 21. Voltage will only be present during a thermostat demand. See figure 35 for test example.

If correct voltages are detected at applicable inputs during a demand, and no voltage is present at the J2 terminals, then fan motor control should be replaced.

Table 21. Fan Motor Control Voltage Inputs

Input	Call for Cooling	Voltage Present
ECM/Y1 and ECM C	YES	Between 24VDC and 32 VDC
	NO	NONE
EXT ECM/R and ECM C	YES	24VAC
	NO	NONE

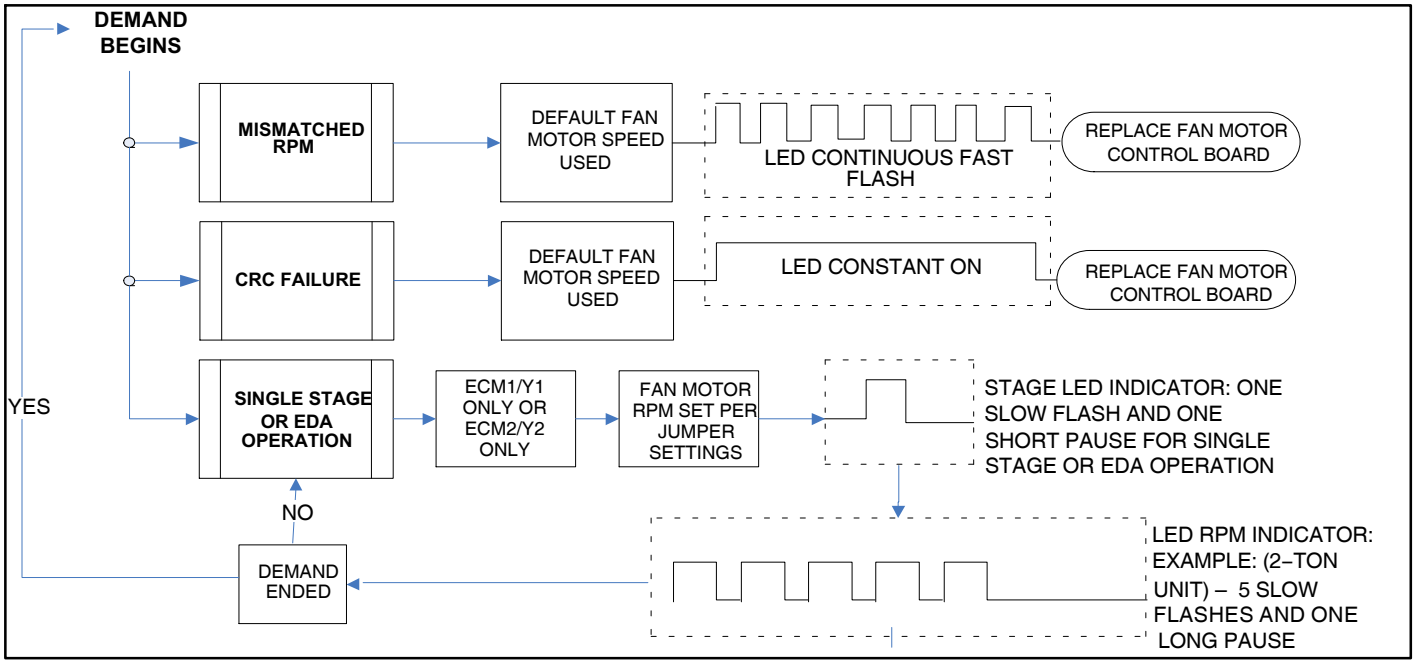

Figure 32. Fan Motor Control One Stage LED Sequence of Operation

TOP GRILLE OR FAN MOTOR MOUNT ADJUSTMENT FOR FAN CLEARANCE

Sometimes during shipping, either the fan motor mounting or top grille may become out of alignment. This may cause the fan motor blade to not clear the orifice ring. If this situation occurs, simply adjust either or both the fan motor mount or top grille positions to allow proper clearance. The top grille four fastener insertion points to the plastic top and motor mount locations are larger than the fasteners used to secure the grille and fan motor mounts. Use the procedures provided in figure 33 to adjust for fan clearance.

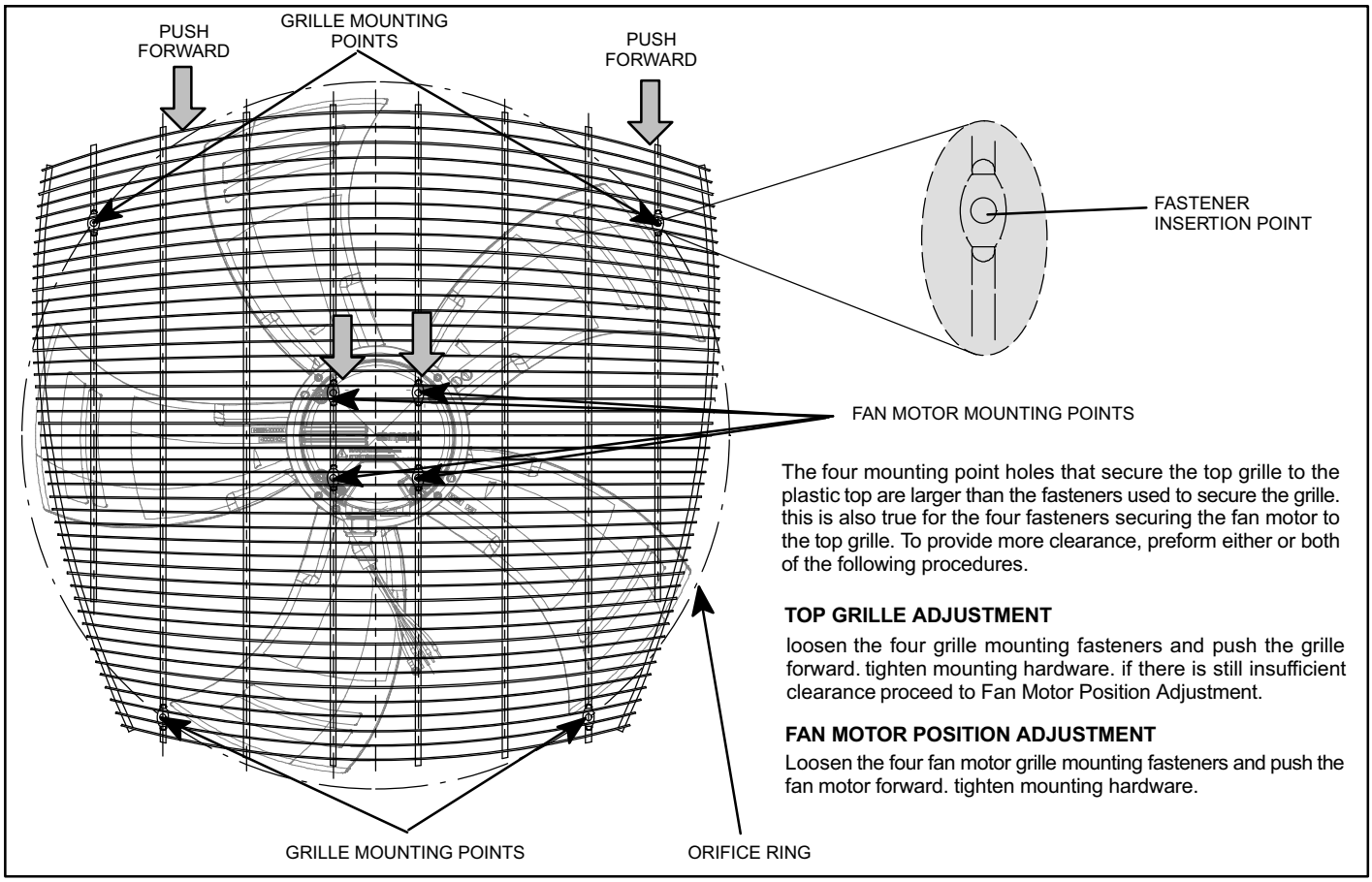

Figure 33. Fan Blade Clearance Adjustment

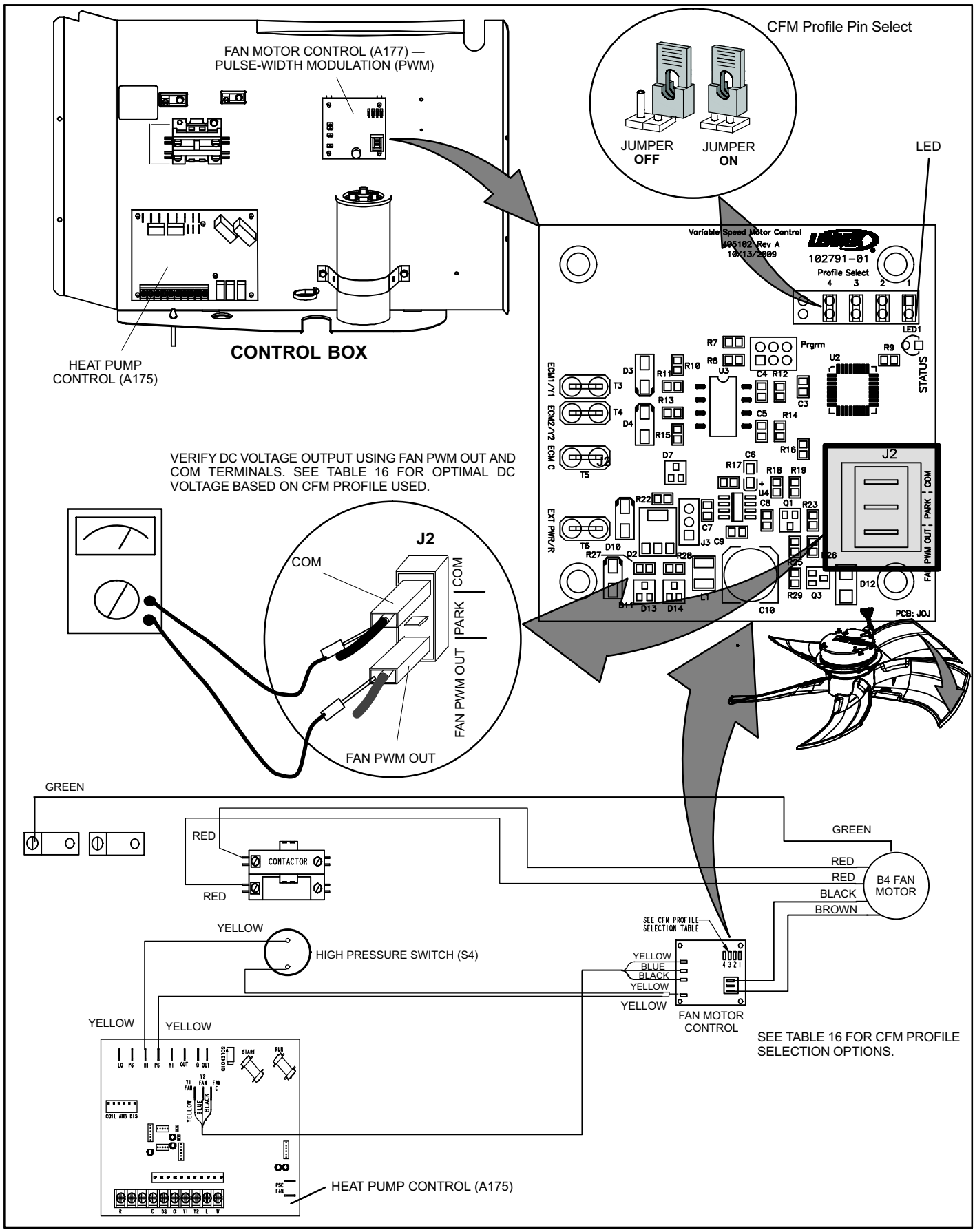

Figure 34. Fan Motor Control, Wiring, Jumper Settings, Testing and LED Location

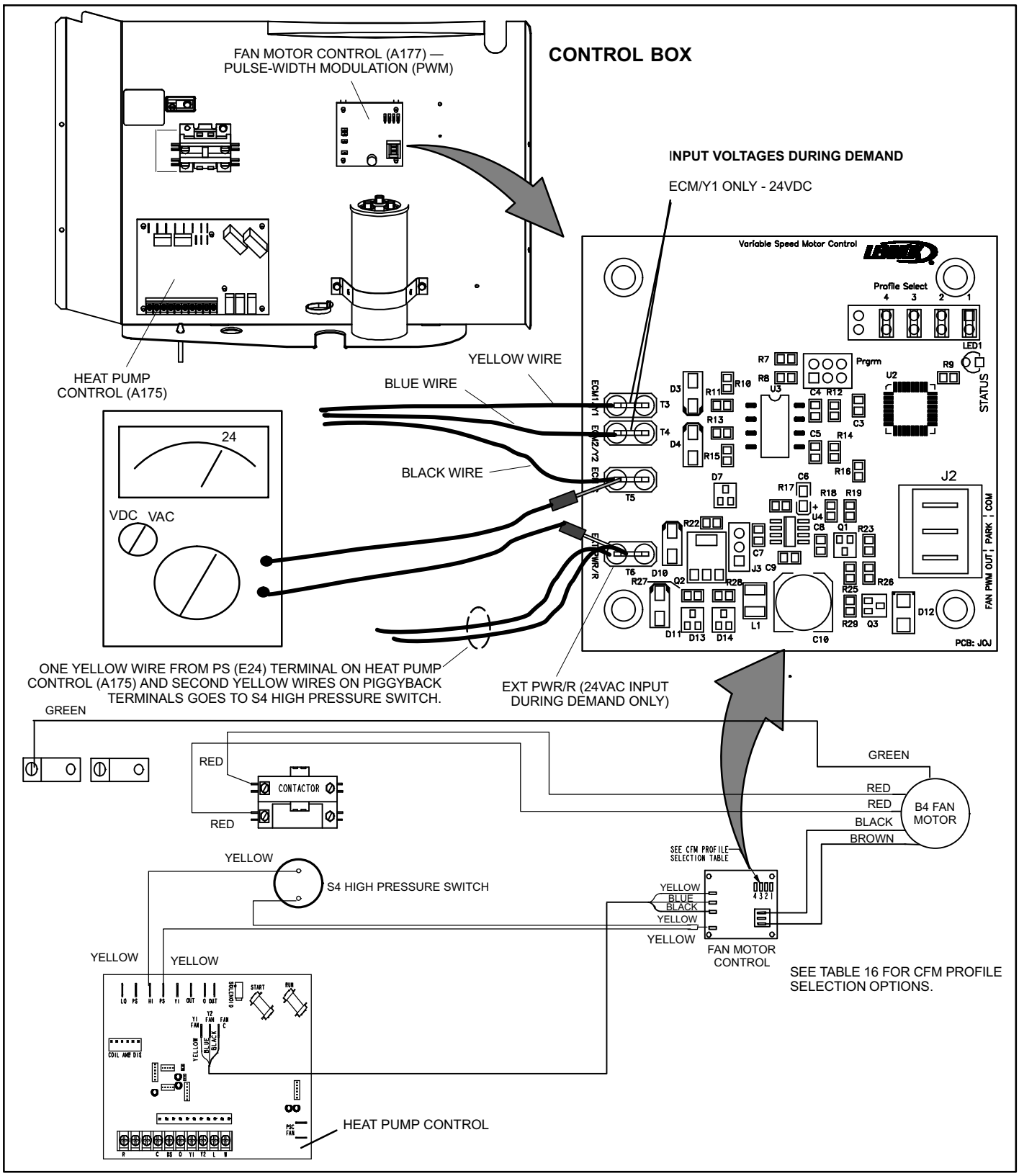

Figure 35. Testing for External Power to Fan Motor Control

HEAT PUMP CONTROL (A175) UNIT NOMINAL CAPACITY CODE CONFIGURATION

In a communicating system, if the room thermostat is indicating either a error code 313, *indoor and outdoor unit capacity mismatch* error code, or error code 34, *must program unit capacity for outdoor unit*. Use the procedure provided in figure 36 to set the unit nominal capacity code.

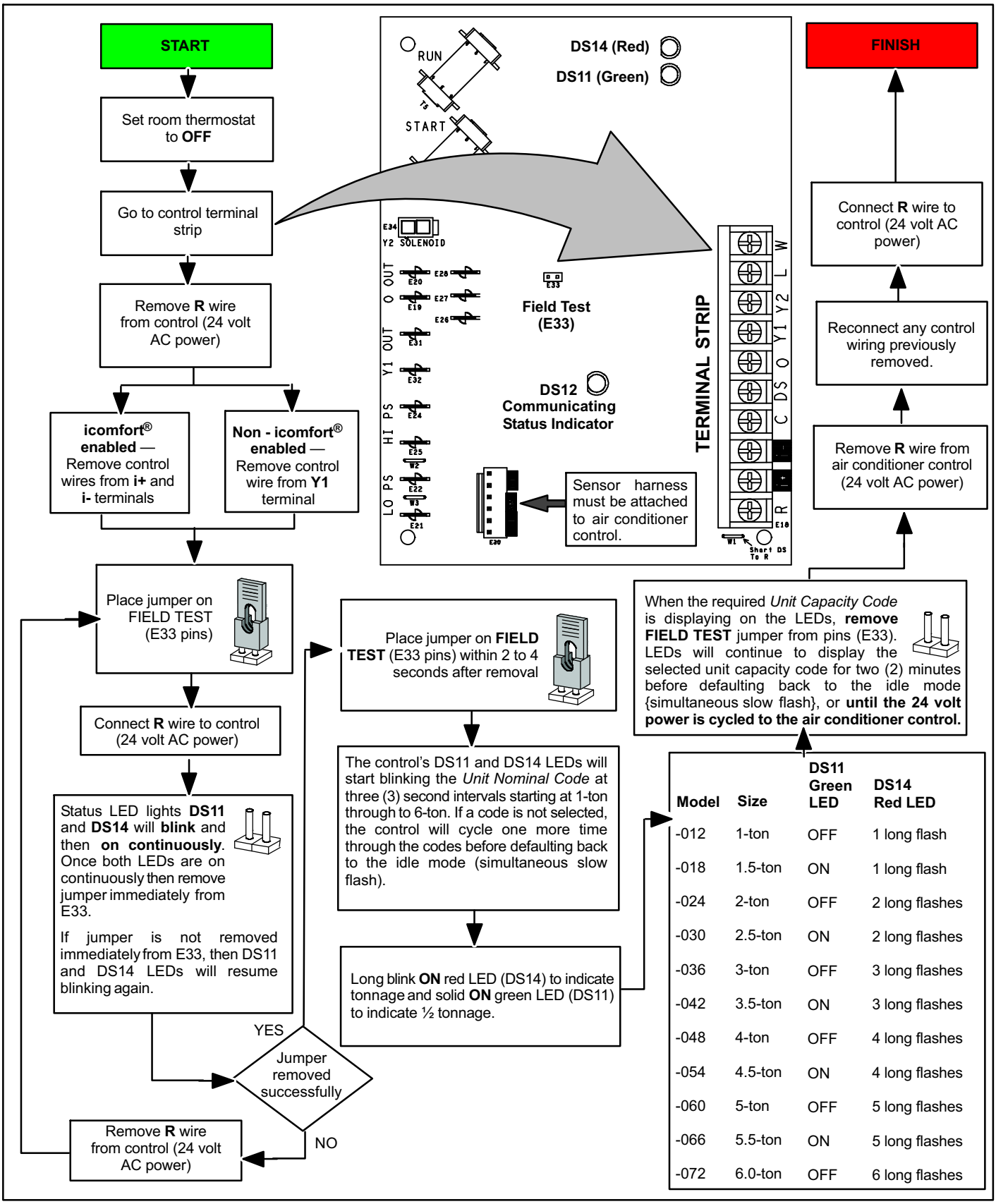

Model	Size	DS11 Green LED	DS14 Red LED
-012	1-ton	OFF	1 long flash
-018	1.5-ton	ON	1 long flash
-024	2-ton	OFF	2 long flashes
-030	2.5-ton	ON	2 long flashes
-036	3-ton	OFF	3 long flashes
-042	3.5-ton	ON	3 long flashes
-048	4-ton	OFF	4 long flashes
-054	4.5-ton	ON	4 long flashes
-060	5-ton	OFF	5 long flashes
-066	5.5-ton	ON	5 long flashes
-072	6.0-ton	OFF	6 long flashes

Figure 36. Heat Pump Control (A175) Unit Nominal Capacity Code Configuration

Maintenance

⚠ WARNING

This product and/or the indoor unit it is matched with may contain fiberglass wool.

Disturbing the insulation during installation, maintenance, or repair will expose you to fiberglass wool dust. Breathing this may cause lung cancer. (Fiberglass wool is known to the State of California to cause cancer.)

Fiberglass wool may also cause respiratory, skin, and eye irritation.

To reduce exposure to this substance or for further information, consult material safety data sheets available from address shown below, or contact your supervisor.

Lennox Industries Inc.
P.O. Box 799900
Dallas, TX 75379-9900

DEALER

Outdoor Unit

Maintenance and service must be performed by a qualified installer or service agency. At the beginning of each cooling season, the system should be checked as follows:

1. Clean and inspect outdoor coil (may be flushed with a water hose). Ensure power is off before cleaning.
2. Outdoor unit fan motor is pre-lubricated and sealed. No further lubrication is needed.
3. Visually inspect all connecting lines, joints and coils for evidence of oil leaks.
4. Check all wiring for loose connections.
5. Check for correct voltage at unit (unit operating).
6. Check amp draw on outdoor fan motor.

   Motor Nameplate:_____ **Actual**:_____.

7. Inspect drain holes in coil compartment base and clean if necessary.

NOTE - If insufficient heating or cooling occurs, the unit should be gauged and refrigerant charge should be checked.

Outdoor Coil

It may be necessary to flush the outdoor coil more frequently if it is exposed to substances which are corrosive or which block airflow across the coil (e.g., pet urine, cottonwood seeds, fertilizers, fluids that may contain high levels of corrosive chemicals such as salts)

- Outdoor Coil — The outdoor coil may be flushed with a water hose.
- Outdoor Coil (sea coast) — Moist air in ocean locations can carry salt, which is corrosive to most metal. Units that are located near the ocean require frequent inspections and maintenance. These inspections will determine the necessary need to wash the unit including the outdoor coil. Consult your installing contractor for proper intervals/procedures for your geographic area or service contract.

Indoor Unit

1. Clean or change filters.
2. Lennox blower motors are prelubricated and permanently sealed. No more lubrication is needed.
3. Adjust blower speed for cooling. Measure the pressure drop over the coil to determine the correct blower CFM. Refer to the unit information service manual for pressure drop tables and procedure.
4. *Belt Drive Blowers* - Check belt for wear and proper tension.
5. Check all wiring for loose connections.
6. Check for correct voltage at unit. (blower operating)
7. Check amp draw on blower motor.

   Motor Nameplate:_____ **Actual**:_____.

Indoor Coil

1. Clean coil if necessary.
2. Check connecting lines, joints and coil for evidence of oil leaks.
3. Check condensate line and clean if necessary.

Locations with Possibility of Heavy Snow or Freezing Rain Accumulation

Heavy snow and/or freezing rain can interfere with the performance of the outdoor fan assembly. Lennox recommends use of the optional snow guard (X8782) in these areas.

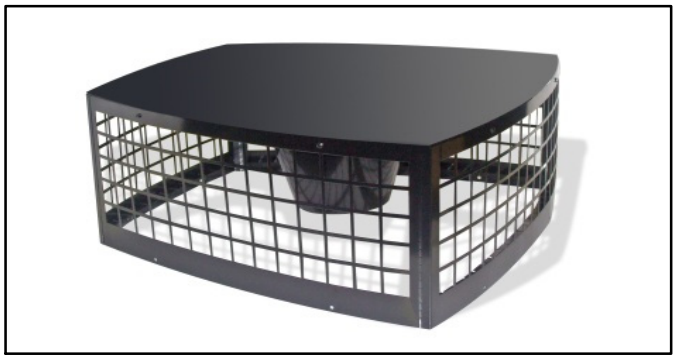

Figure 37. Snow Guard Top Cover — X8782

HOMEOWNER

Cleaning of the outdoor unit's coil should be performed by a trained service technician. Contact your dealer and set up a schedule (preferably twice a year, but at least once a year) to inspect and service your outdoor unit. The following maintenance may be performed by the homeowner.

⚠ IMPORTANT

Sprinklers and soaker hoses should not be installed where they could cause prolonged exposure to the outdoor unit by treated water. Prolonged exposure of the unit to treated water (i.e., sprinkler systems, soakers, waste water, etc.) will corrode the surface of steel and aluminum parts and diminish performance and longevity of the unit.

Outdoor Coil

The outdoor unit must be properly maintained to ensure its proper operation.

- Please contact your dealer to schedule proper inspection and maintenance for your equipment.
- Make sure no obstructions restrict airflow to the outdoor unit.
- Grass clippings, leaves, or shrubs crowding the unit can cause the unit to work harder and use more energy.
- Keep shrubbery trimmed away from the unit and periodically check for debris which collects around the unit.

Routine Maintenance

In order to ensure peak performance, your system must be properly maintained. Clogged filters and blocked airflow prevent your unit from operating at its most efficient level.

1. **Air Filter —** Ask your Lennox dealer to show you where your indoor unit's filter is located. It will be either at the indoor unit (installed internal or external to the cabinet) or behind a return air grille in the wall or ceiling. Check the filter monthly and clean or replace it as needed.
2. **Disposable Filter —** Disposable filters should be replaced with a filter of the same type and size.

NOTE — If you are unsure about the filter required for your system, call your Lennox dealer for assistance.

3. **Reusable Filter —** Many indoor units are equipped with reusable foam filters. Clean foam filters with a mild soap and water solution; rinse thoroughly; allow filter to dry completely before returning it to the unit or grille.

NOTE — The filter and all access panels must be in place any time the unit is in operation.

4. **Lennox Branded Air Filters —** are designed to remove airborne particles from the air passing through the filter.
5. **Indoor Unit —** The indoor unit's evaporator coil is equipped with a drain pan to collect condensate formed as your system removes humidity from the inside air. Have your dealer show you the location of the drain line and how to check for obstructions. (This would also apply to an auxiliary drain, if installed.)

Thermostat Operation

See the ComfortSense® 7000 thermostat homeowner manual for instructions on how to operate your thermostat.

Heat Pump Operation

Your new Lennox heat pump has several characteristics that you should be aware of:

- Heat pumps satisfy heating demand by delivering large amounts of *warm* air into the living space. This is quite different from gas- or oil-fired furnaces or an electric furnace which deliver lower volumes of considerably *hotter* air to heat the space.
- Do not be alarmed if you notice frost on the outdoor coil in the winter months. Frost develops on the outdoor coil during the heating cycle when temperatures are below 45°F (7°C). The heat pump control activates a defrost cycle lasting 5 to 15 minutes at preset intervals to clear the outdoor coil of the frost.
- During the defrost cycle, you may notice steam rising from the outdoor unit. This is a normal occurrence. The thermostat may engage auxiliary heat during the defrost cycle to satisfy a heating demand; however, the unit will return to normal operation at the conclusion of the defrost cycle.

Extended Power Outage

The heat pump is equipped with a compressor crankcase heater which protects the compressor from refrigerant *slugging* during cold weather operation.

If power to your unit has been interrupted for several hours or more, set the room thermostat selector to the EMERGENCY HEAT setting to obtain temporary heat without the risk of serious damage to the heat pump.

In EMERGENCY HEAT mode, all heating demand is satisfied by auxiliary heat; heat pump operation is locked out. After a six-hour compressor crankcase warm-up period, the thermostat can be switched to the HEAT setting and normal heat pump operation may resume.

Preservice Check

If your system fails to operate, check the following before calling for service:

- Verify room thermostat settings are correct.
- Verify that all electrical disconnect switches are ON.
- Check for any blown fuses or tripped circuit breakers.
- Verify unit access panels are in place.
- Verify air filter is clean.
- If service is needed, locate and write down the unit model number and have it handy before calling.

Accessories

For update-to-date information, see any of the following publications:

- Lennox XP17 Engineering Handbook
- Lennox Product Catalog
- Lennox Price Book

SunSource® Home Energy System

This Dave Lennox *Signature*® Collection heat pump is factory-equipped with components that make it SunSource® solar-ready. These units can be matched with solar modules and other optional equipment so that they can become part of a SunSource® Home Energy System.

Units can be upgraded for use with solar equipment at the time of installation or in the future.

Solar energy is first used to meet cooling/heating demands. When the outdoor unit is not operating, the system powers lighting, appliances and other electronic devices in the home. Any surplus power is sent back to the utility company for a possible credit (check with your local utility company for availability).

The SolarSync™ package consists of the following components:

- Lennox® Solar Subpanel installed in a Dave Lennox *Signature*® Collection air conditioner or heat pump unit.
- Solar modules (1 to 15 may be used to vary the amount of electricity generated).
- Envoy Communications Gateway monitors solar power performance.

All components must be ordered separately. See the Lennox XP17 Engineering Handbook for SunSource® Home Energy System component ordering.

Wiring runs from the roof-mounted solar modules to the outdoor unit. From there, power travels to the home electrical service panel using the existing outdoor unit power wiring.

XP17 Start-Up and Performance Checklist

Customer _____ Address _____

Indoor Unit Model _____ Serial _____

Outdoor Unit Model _____ Serial _____

Solar Module Mfg and Model _____ Serial _____

Notes: _____

START-UP CHECKS

Refrigerant Type: ___

Rated Load Amps __ Actual Amps _____ Rated Volts _____ Actual Volts _____

Condenser Fan Full Load Amps _____ Actual Amps: _____

COOLING MODE

Vapor Pressure: ___ Liquid Pressure: _____

Supply Air Temperature: _____ Ambient Temperature: _____ Return Air Temperature: _____

HEATING MODE

Vapor Pressure: ___ Liquid Pressure: _____

Supply Air Temperature: _____ Ambient Temperature: _____ Return Air Temperature: _____

System Refrigerant Charge (Refer to manufacturer's information on unit or installation instructions for required subcooling and approach temperatures.)

Subcooling: Saturated Condensing Temperature (A) *minus* Liquid Line Temperature (B)	A	—	B	=	SUBCOOLING
Approach: Liquid Line Temperature (A) *minus* Outdoor Air Temperature (B)	A	—	B	=	APPROACH
Indoor Coil Temp. Drop (18 to 22°F) Return Air Temperature (A) *minus* Supply Air Temperature (B)	A	—	B	=	COIL TEMP DROP