NO.	E1FE-3748
ISSUED:	SEP.2012
REVISED:	

HOSHIZAKI
SELF-CONTAINED CUBER

MODEL **IM-100CNE**
IM-100CNE-23
IM-100CNE-21

(E1FE-D010,E1FE-D011,E1FE-D012)

PARTS LIST

[HE]

B-1 SEP. 2012

AUXILIARY CODE

U - 1

The auxiliary code is the first two characters in the serial number. The first character indicates the production year. Years progress or regress in alphabetical order. The series of letters and skipped letters depend on UL listing, production, and model. See the auxiliary code(s) and corresponding year(s) on the front cover.

The second character indicates significant part changes within the same year. Base is "1" and this number advances for each change. If there is no significant part change at the turn of the year, this number starts from "0."

MARKS LOCATED UNDER THE AUXILIARY CODE

- \- = Part deleted.
- x = Part deleted and replaced by "o" part.
- o = New part in place of "x" part.

FASTENER PART NUMBER

SCREWS

F S T 0 3 0 6 F 0

- Special treatment (0 - 9)
- Material *1
- Length (mm)
- Nominal diameter (mm)
- Description *2
- Fastener

NUTS & WASHERS

F W S P 0 5 S 0

- Special treatment (0 - 9)
- Material *1
- Nominal diameter (mm)
- Description *2
- Fastener

*1 Material

F: Steel
S: Austenitic stainless steel
M: Martensitic stainless steel
B: Copper alloy
P: Polycarbonate
N: Polyamide
V: PVC
A: ABS
X: Polyacetal
L: Aluminum

*2 Description

First letter
S: Machine screw
T: Tapping screw
M: Wood screw
B: Bolt
W: Washer
N: Nut

IM−100CNE（−23，−21）

A. ICE CUBBER ASSY（1／2）

(B−1) and later

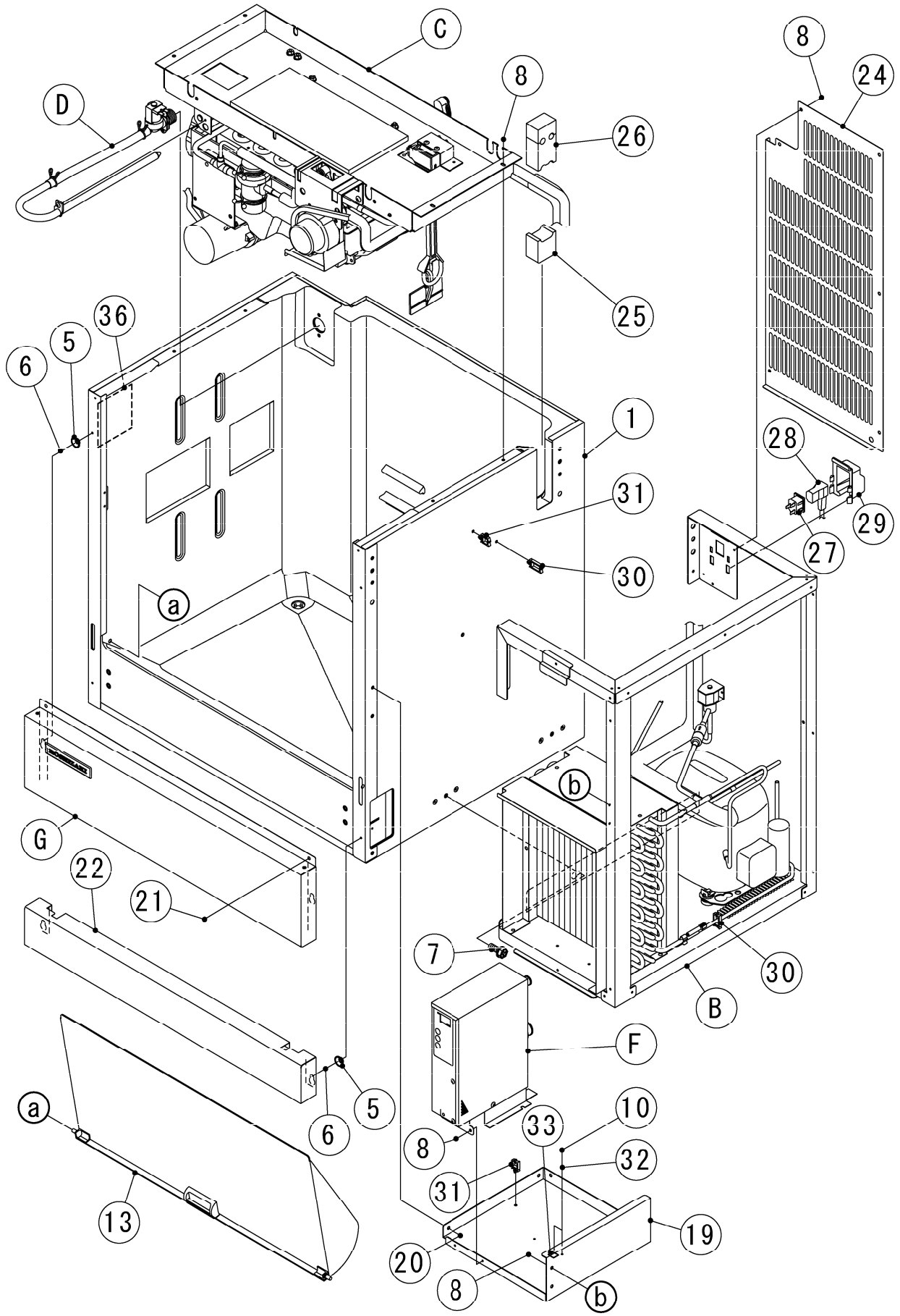

A. ICE CUBBER ASSY（2／2）

(B−1) and later

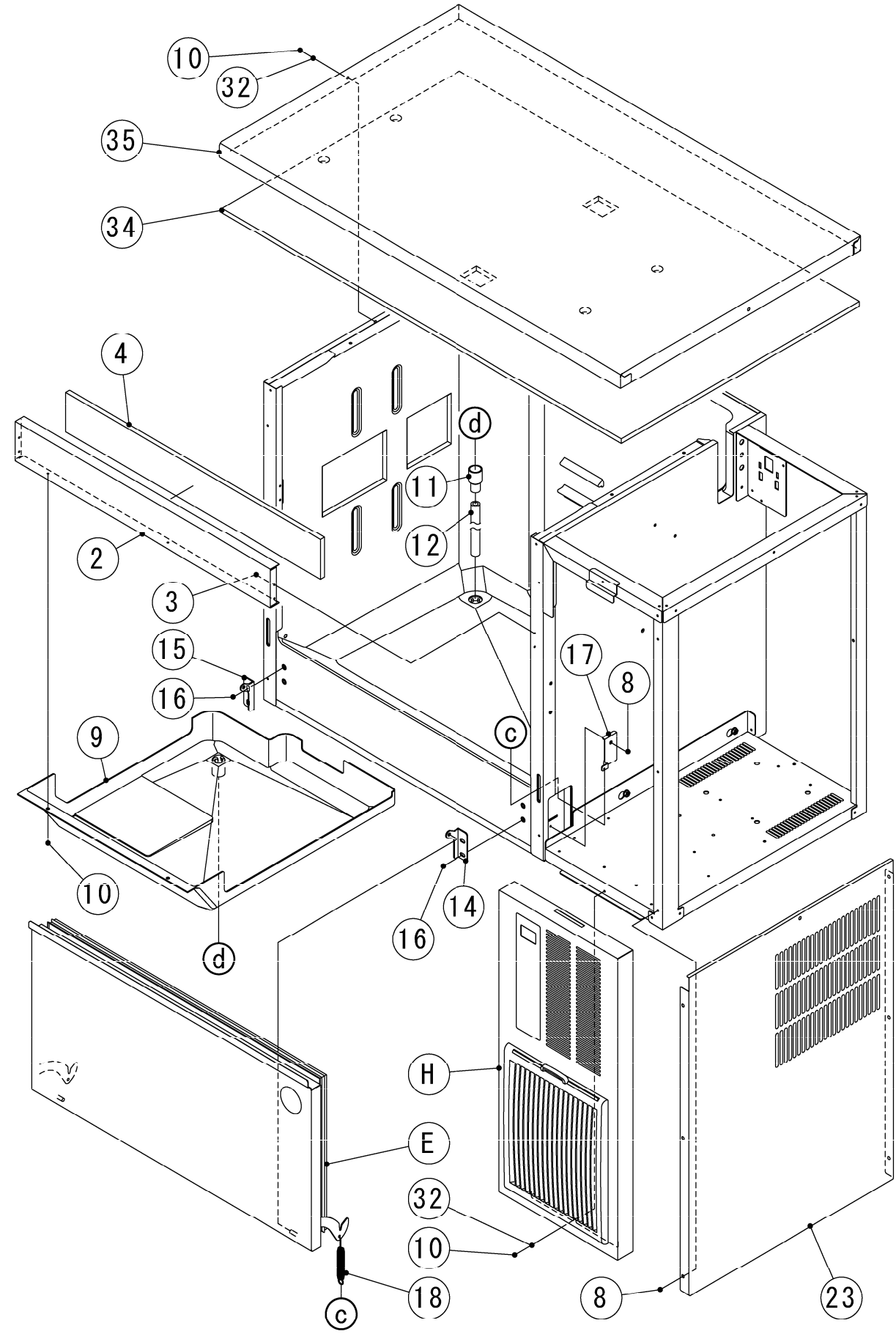

HE

MODEL: **IM-100CNE(-23,-21)** TITLE:**A.ICE CUBBER ASSY**

INDEX NO.	DESCRIPTION	MATERIAL OR MODEL NUMBER	PART NUMBER	REQ'D NUMBER			
				B-1			
B	REFRIGERATION ASSY		1H5198A01	1			
C	MECHANISM ASSY		2X1206A01	1			
D	WATER CIRCUIT ASSY		2X1210A01	1			
E	DOOR ASSY		3Y5436A01	1			
F	CONTROL BOX ASSY		2X0842A01	1			
G	FRONT COVER UPPER ASSY		3Y6321A01	1			
H	FRONT COVER(R) ASSY		3Y6324A01	1			
1	BODY		1H5055G01	1			
2	FRONT FRAME		3Y6326M01	1			
3	RIVET	SSD42SSBS(t1.6～3.2)	7170-0002	4			
4	INSULATION - FRONT FRAME		4Y7624P01	1			
5	TAPER COLLAR		4H0171-01	4			
6	RIVET	SSD42BS	7170-0001	4			
7	TAPPING SCREW - HEX		442040-01	4			
8	Flange Bolt (C-TITE)		FTR0408M0	19			
9	DRAIN PAN		2H6143G01	1			
10	S-TITE TRUSS HEAD SCREW		FTS0408M0	7			
11	DRAIN TUBE		4H2585-01	1			
12	DRAIN PIPE		4Y7493P06	1			
13	SLOPE		3H2978G01	1			
14	HINGE(A)		4H0456-01	1			
15	HINGE(L)		426053-01	1			
16	HEX HEAD BOLT (SPRING WASHER AND FLAT WASHER)		FBK0616S0	4			
17	BRACKET - SPRING		4Y7620M01	1			
18	SPRING		4X5209-01	1			
19	PLATE - FRAME		2X0948M01	1			
20	T2 TRUSS HEAD SCREW		FT20408F0	2			
21	TRUSS HEAD SCREW		FST0408S0	2			
22	FRONT COVER LOWER		3Y6322G01	1			
23	SIDE PANEL(R) - UNIT		2X0959M01	1			
24	REAR PANEL - UNIT		2X0960M01	1			
25	INSULATION(A)		4H2683-01	1			
26	INSULATION(B)		4Y7510P01	1			
27	CONNECTOR		P00245-02	1			

HE

MODEL: **IM-100CNE(-23,-21)** TITLE:**A.ICE CUBBER ASSY**

INDEX NO.	DESCRIPTION	MATERIAL OR MODEL NUMBER	PART NUMBER	REQ'D NUMBER			
				B-1			
28	POWER CORD	CONT Plug	P00240-01	1			
29	COVER - CONNECTOR		2X0271P01	1			
30	WIRE SADDLE		428060-02	2			
31	WIRE SADDLE		428060-03	2			
32	SPRING WASHER		FWSP04S0	5			
33	LABEL - GROUND(B)		450452-02	1			
34	INSULATION - TOP		3Y6327P01	1			
35	TOP PANEL		1H5071M01	1			
36	NAME PLATE		N/A	1			

B. REFRIGERATION ASSY (B−1) and later

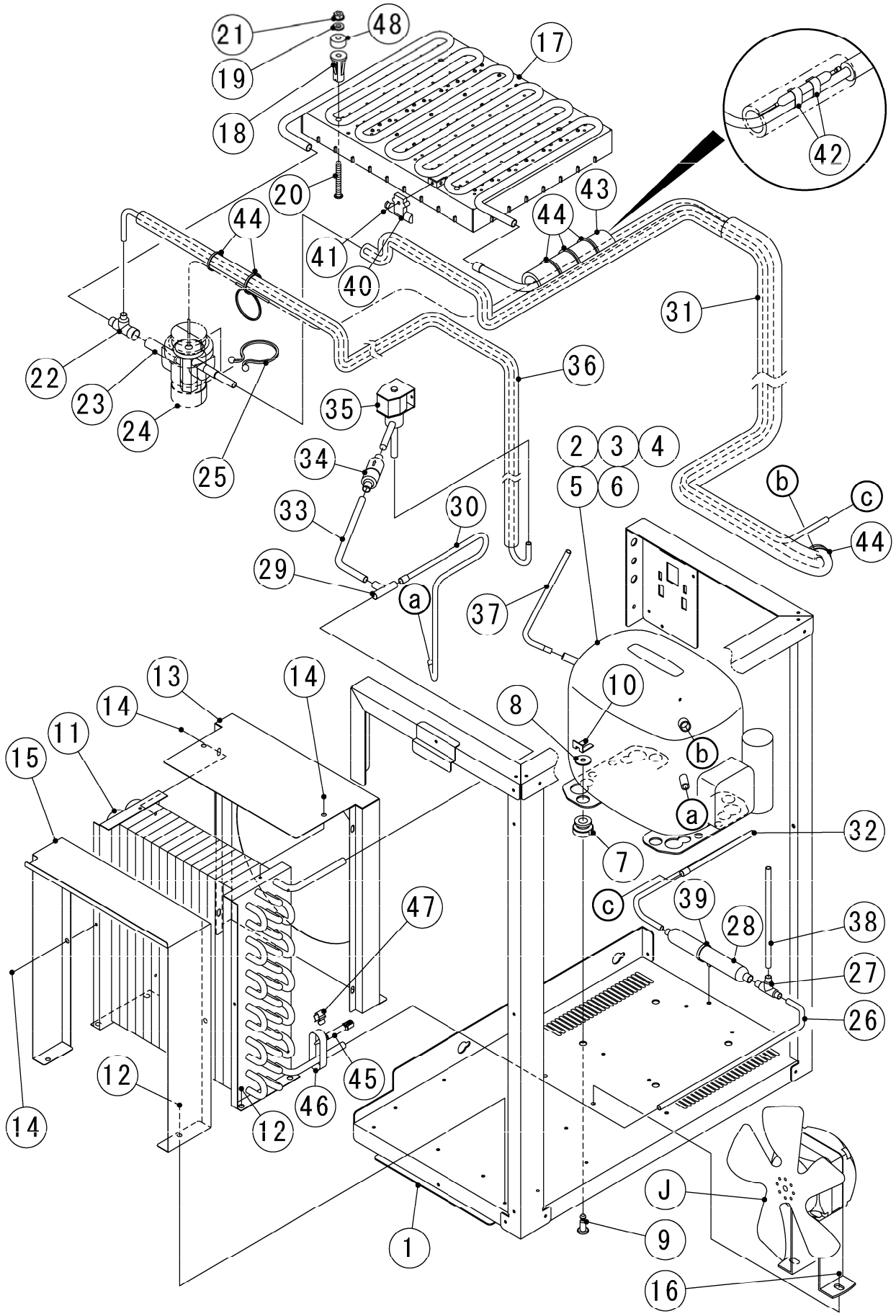

HE

MODEL: **IM-100CNE(-23,-21)** TITLE:**B.REFRIGERATION ASSY**

INDEX NO.	DESCRIPTION	MATERIAL OR MODEL NUMBER	PART NUMBER	REQ'D NUMBER			
				B-1			
J	FAN MOTOR ASSY		3Y6055A01	1			
1	UNIT FRAME G		2X1207G01	1			
2	COMPRESSOR		452236-01	1			
3	STARTING RELAY		452237-01	1			
4	START CAPACITOR		456350-01	1			
5	CORD RELIEF		452239-01	1			
6	COVER		459924-01	1			
7	GROMMET		450897-01	4			
8	WASHER CUSHION		450894-01	4			
9	STEEL PIN		452255-01	4			
10	CLIP		452256-01	4			
11	CONDENSER - AIR COOLED		P02604-01	1			
12	Flange Bolt (C-TITE)		FTR0408M0	6			
13	SHROUD(A)		2X0938M01	1			
14	T2 TRUSS HEAD SCREW		FT20408F0	8			
15	SHROUD(B)		3Y6296M01	1			
16	HEX HEAD BOLT		FBK0612S0	2			
	(SPRING WASHER AND FLAT WASHER)						
17	EVAPORATOR		2H6438G03	1			
	EVAPORATOR 23MM	(IM-100CNE-23)	2H1836G01	1			
	EVAPORATOR 21MM	(IM-100CNE-21)	2H0716G03	1			
18	COLLAR		3H3879-01	4			
19	WASHER		4H0777-01	4			
20	SCREW EVAPORATOR		4Y4922M02	4			
		(IM-100CNE-23,-21)	4Y4922M03	4			
21	FLANGE NUT		FNHF06S0	4			
22	TEE		420335-01	1			
23	EXPANSION VALVE		P00650-01	1			
24	VALVE COVER		3Y3051P01	1			
25	CLAMP		P00752-01	2			
26	COPPER TUBE(B) - HIGH SIDE		4Y7588M01	1			
27	TEE		456655-01	1			
28	DRIER		458776-01	1			
29	TEE		420041-11	1			
30	COPPER TUBE(A) - HIGT SIDE		4Y7589M01	1			

HE

MODEL: **IM-100CNE(-23,-21)** TITLE:**B.REFRIGERATION ASSY**

INDEX NO.	DESCRIPTION	MATERIAL OR MODEL NUMBER	PART NUMBER	REQ'D NUMBER			
				B-1			
31	HEAT EXCHANGER		2X1208G01	1			
32	COPPER TUBE(C) - HIGH SIDE		4Y7590M01	1			
33	COPPER TUBE(A) - HOT GAS		4Y7591M01	1			
34	STRAINER		P00812-01	1			
35	HOT GAS VALVE		P01871-01	1			
36	COPPER TUBE(B) - HOT GAS		2X0930G01	1			
37	PROCESS TUBE		4X4047-01	1			
38	PROCESS TUBE		4Y0273-01	1			
39	PUSH MOUNT TIE		436156-01	1			
40	HOLDER - THERMISTOR		3H9642-01	1			
41	S-TITE TRUSS HEAD SCREW		FTS0408M0	1			
42	CLIP		452254-01	2			
43	INSULATION		4X8643-01	1			
44	TIE	CV-150	7920-0003	6			
45	THERMISTOR(G) - FILTER		4Y4859G01	1			
46	ALUMINUM TAPE		1H5198-01	1			
47	CLIP - THERMISTOR		4R2938-01	1			
48	WASHER	(IM-100CNE-23)	4H1365-05	4			
		(IM-100CNE-21)	4H1365-06	4			

C. MECHANISM ASSY

(B−1) and later

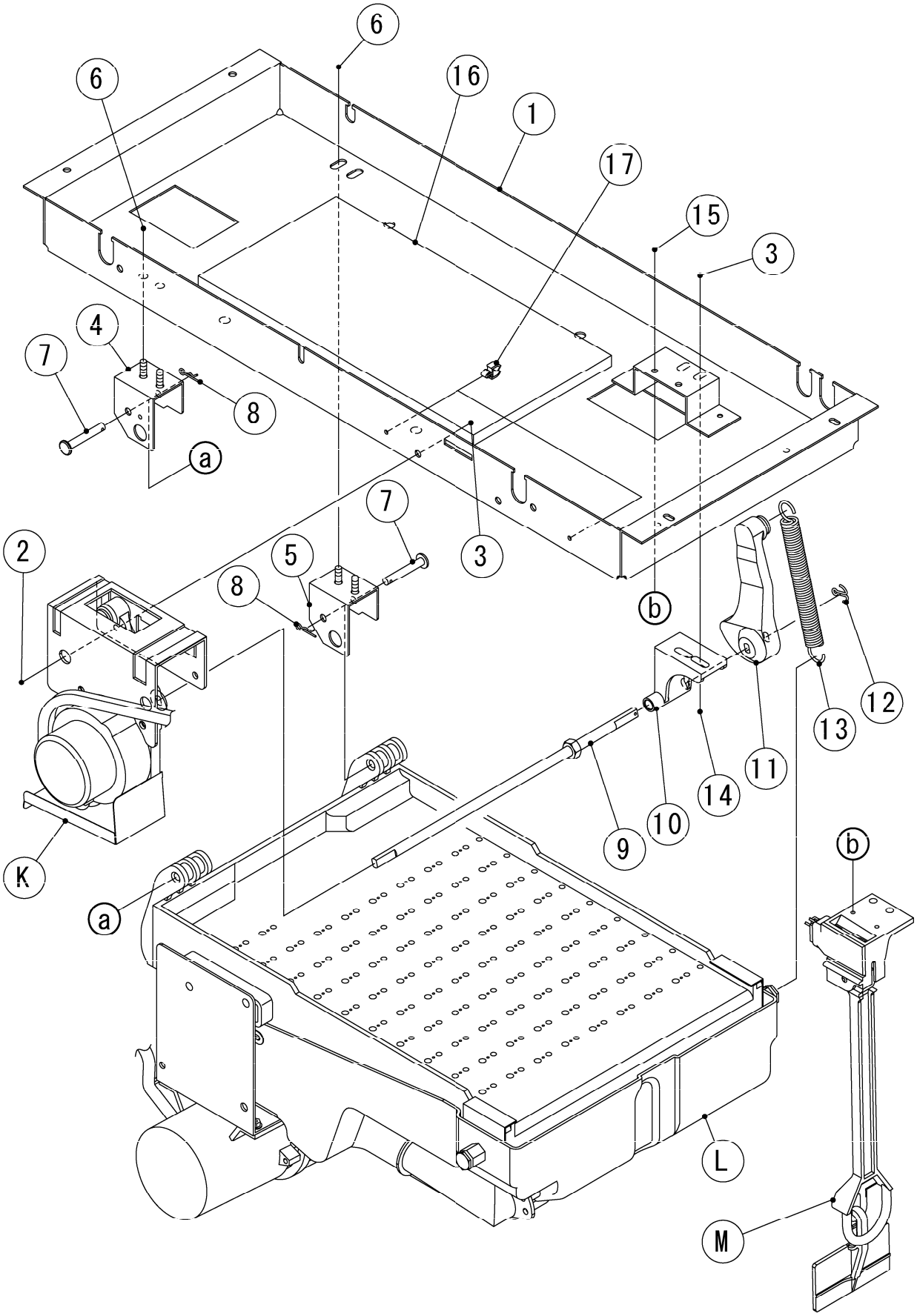

HE

MODEL: **IM-100CNE(-23,-21)** TITLE:**C.MECHANISM ASSY**

INDEX NO.	DESCRIPTION	MATERIAL OR MODEL NUMBER	PART NUMBER	REQ'D NUMBER			
				B-1			
K	ACTUATOR MOTOR ASSY		3Y5304A02	1			
L	WATER PAN ASSY		2X0844A01	1			
M	BIN CONTROL SWITCH		3H1538A02	1			
1	MECHANISM BASE		3Y6726G01	1			
		(IM-100CNE-21)	3Y6879G01	1			
2	TRUSS HEAD MACHINE SCREW		FST0512S0	2			
3	FLANGE NUT		FNHF05S0	4			
4	BEARING PLATE		3H1440G03	1			
5	BEARING PLATE		3H1440G04	1			
6	FLANGE NUT		FNHF06S0	4			
7	SHAFT(B)		4H1184-02	2			
8	SNAP PIN		715S-0006	2			
9	CAM SHAFT		4H2702G01	1			
10	BEARING - CAM SHAFT		3X8307-01	1			
11	CAM(B)		315775-01	1			
12	CUTTER PIN		711S-0212	1			
13	SPRING		4H0287-01	1			
14	TRUSS HEAD SCREW		FST0516S0	2			
15	T2 TRUSS HEAD SCREW		FT20408S0	2			
16	INSULATION(D)		4Y7504P01	1			
17	CLAMP		426197-01	2			

D. WATER CIRCUIT ASSY (B－1) and later

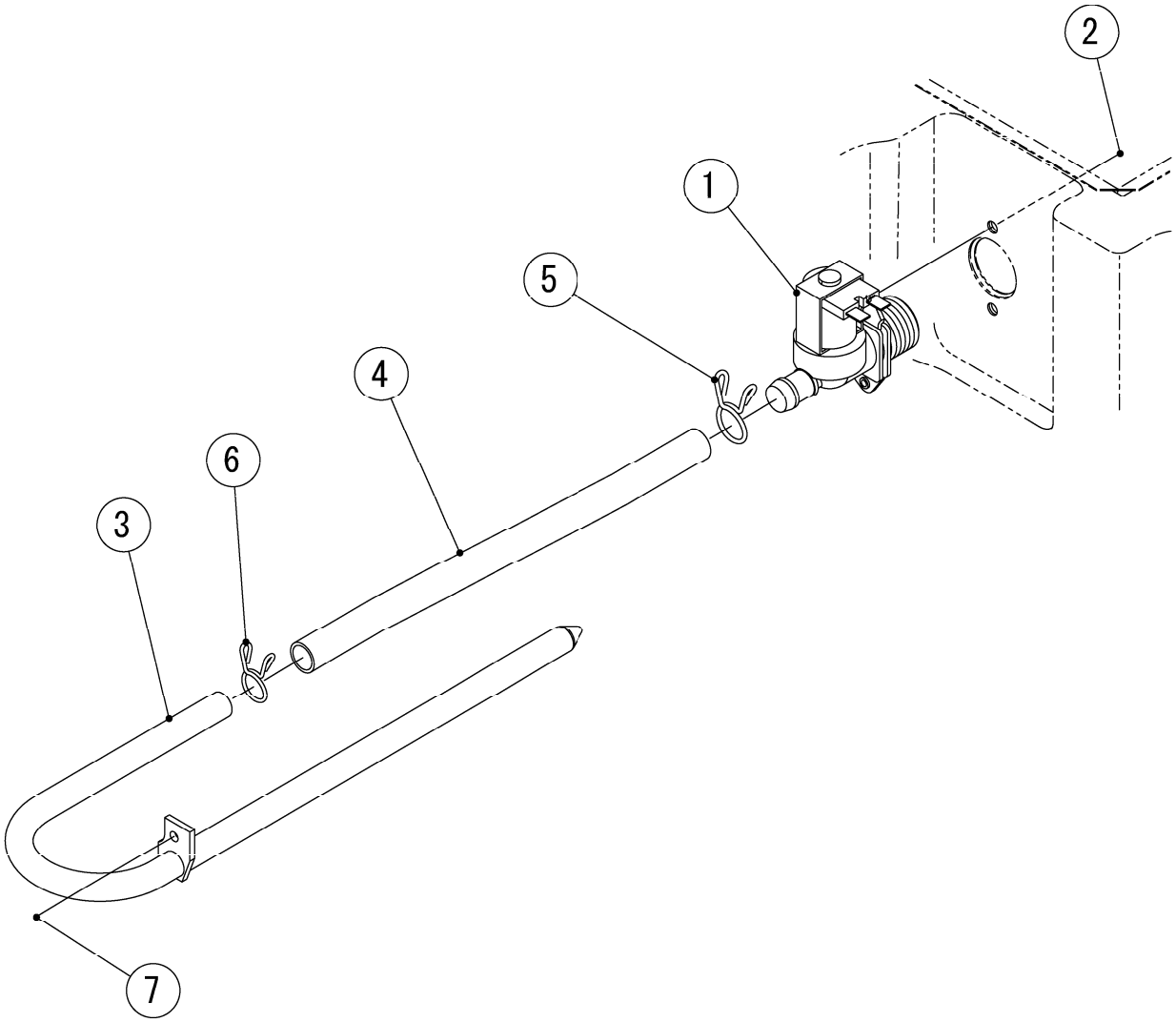

HE

MODEL: **IM-100CNE(-23,-21)** TITLE:**D.WATER CIRCUIT ASSY**

INDEX NO.	DESCRIPTION	MATERIAL OR MODEL NUMBER	PART NUMBER	REQ'D NUMBER			
				B-1			
1	WATER VALVE		P02056-01	1			
2	HEX HEAD BOLT SW		FBK0410S0	2			
3	WATER SUPPLY PIPE		3H9532G01	1			
4	SILICONE HOSE		4Y6912R02	1			
5	HOSE CLAMP		435934-03	1			
6	HOSE CLAMP		435934-02	1			
7	TRUSS HEAD SCREW		FST0408S0	1			

E. DOOR ASSY

(B－1) and later

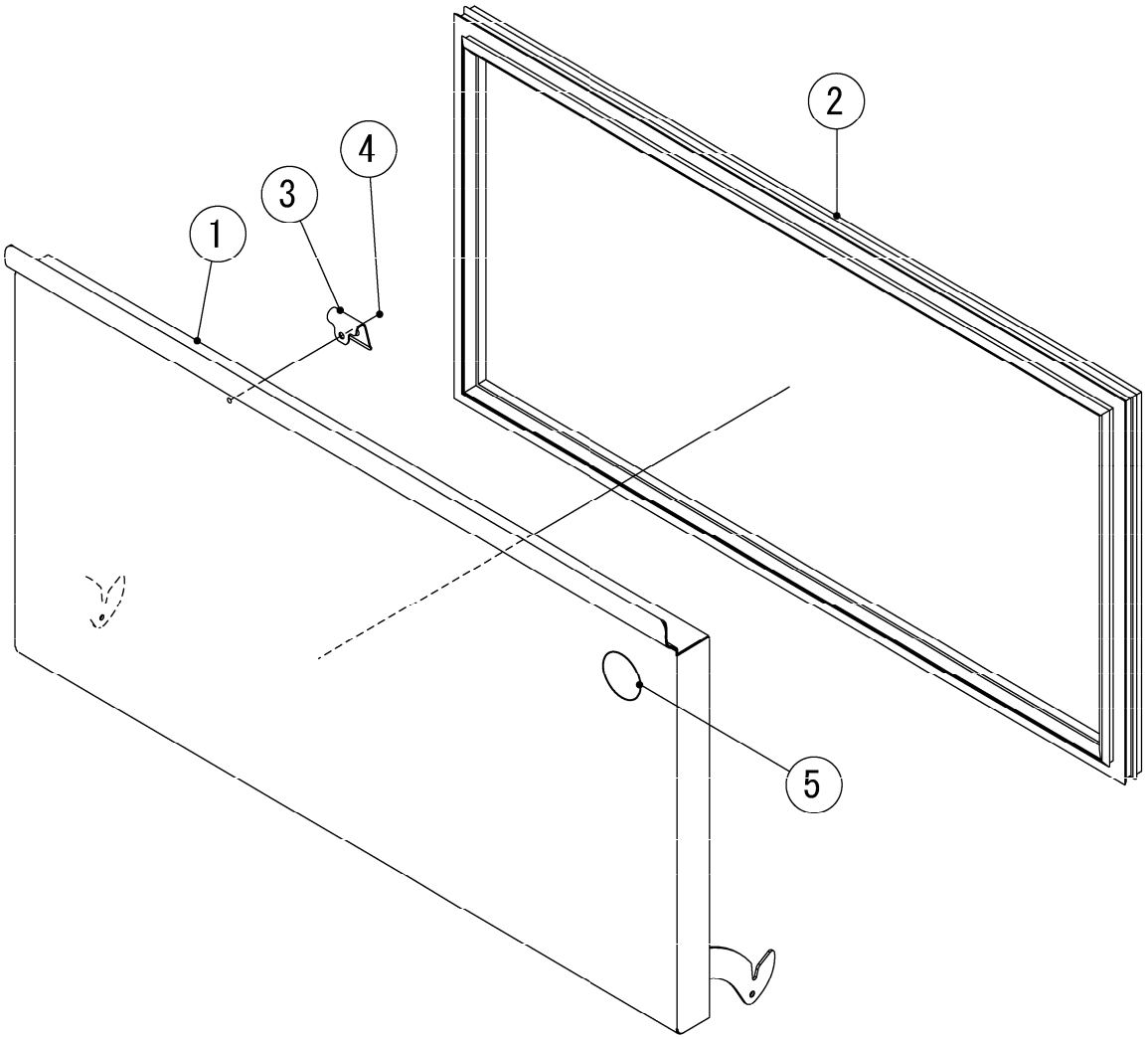

HE

MODEL: **IM-100CNE(-23,-21)** TITLE:**E.DOOR ASSY**

INDEX NO.	DESCRIPTION	MATERIAL OR MODEL NUMBER	PART NUMBER	REQ'D NUMBER			
				B-1			
1	DOOR G		3Y5435G01	1			
2	DOOR GASKET		3Y6199P04	1			
3	CATCH - SLOPE		4X7644-01	1			
4	T2 TRUSS HEAD SCREW		FT20408M0	1			
5	LABEL - PENGUIN		471486L01	1			

F. CONTROL BOX ASSY

(B−1) and later

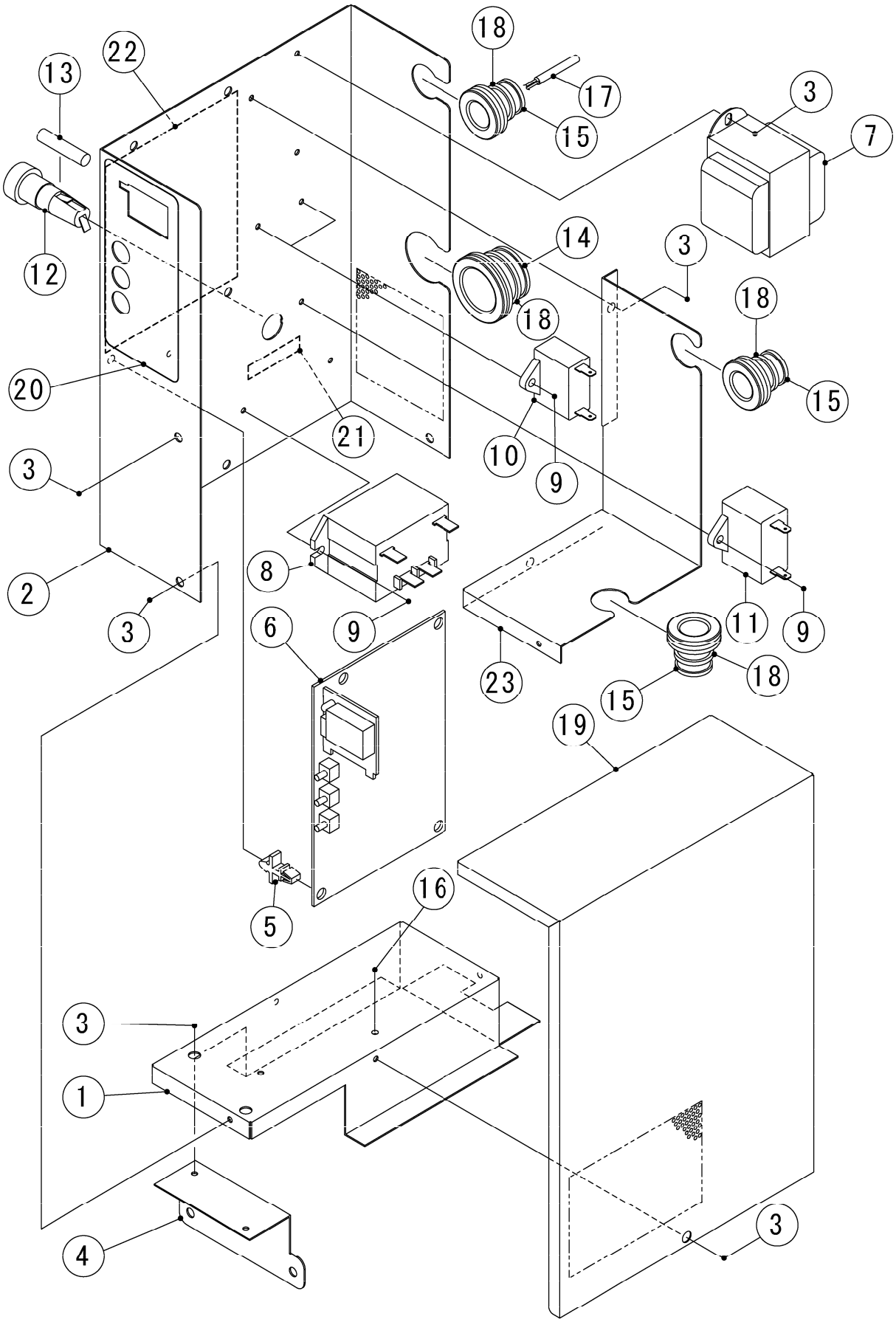

HE

MODEL: **IM-100CNE(-23,-21)** TITLE:**F.CONTROL BOX ASSY**

INDEX NO.	DESCRIPTION	MATERIAL OR MODEL NUMBER	PART NUMBER	REQ'D NUMBER			
				B-1			
1	CONTROL BOX(A)		3Y5611M01	1			
2	CONTROL BOX(B)		2X1053M01	1			
3	T2 TRUSS HEAD SCREW		FT20408F0	11			
4	PLATE - BOX		4Y7215M01	1			
5	BOARD SUPPORT		414929-02	4			
6	CONTROLLER BOARD		P01873-01	1			
7	TRANSFORMER		P02714-01	1			
8	POWER RELAY		P00034-01	1			
9	TRUSS HEAD TAPPING SCREW T2		FT20410F0	5			
10	CAPACITOR		P01870-01	2			
11	CAPACITOR		P01910-01	1			
12	FUSE HOLDER		P00014-01	1			
13	FUSE		P01876-01	1			
14	GROMMET		4H2568-01	1			
15	GROMMET		4H2568-02	3			
16	TRUSS HEAD SCREW		FST0408S0	1			
17	THERMISTOR - CUBE COTROL		P00350-04	1			
18	TIE	CV-150	7920-0003	4			
19	CONTROL BOX COVER		3Y6513M01	1			
20	CONTROL LABEL		475642L01	1			
21	LABEL - FUSE		466798-01	1			
22	WIRING LABEL		3Y6137L01	1			
23	SEPARATOR - BOX		3Y6512M01	1			

G. FRONT COVER UPPER ASSY (B－1) and later

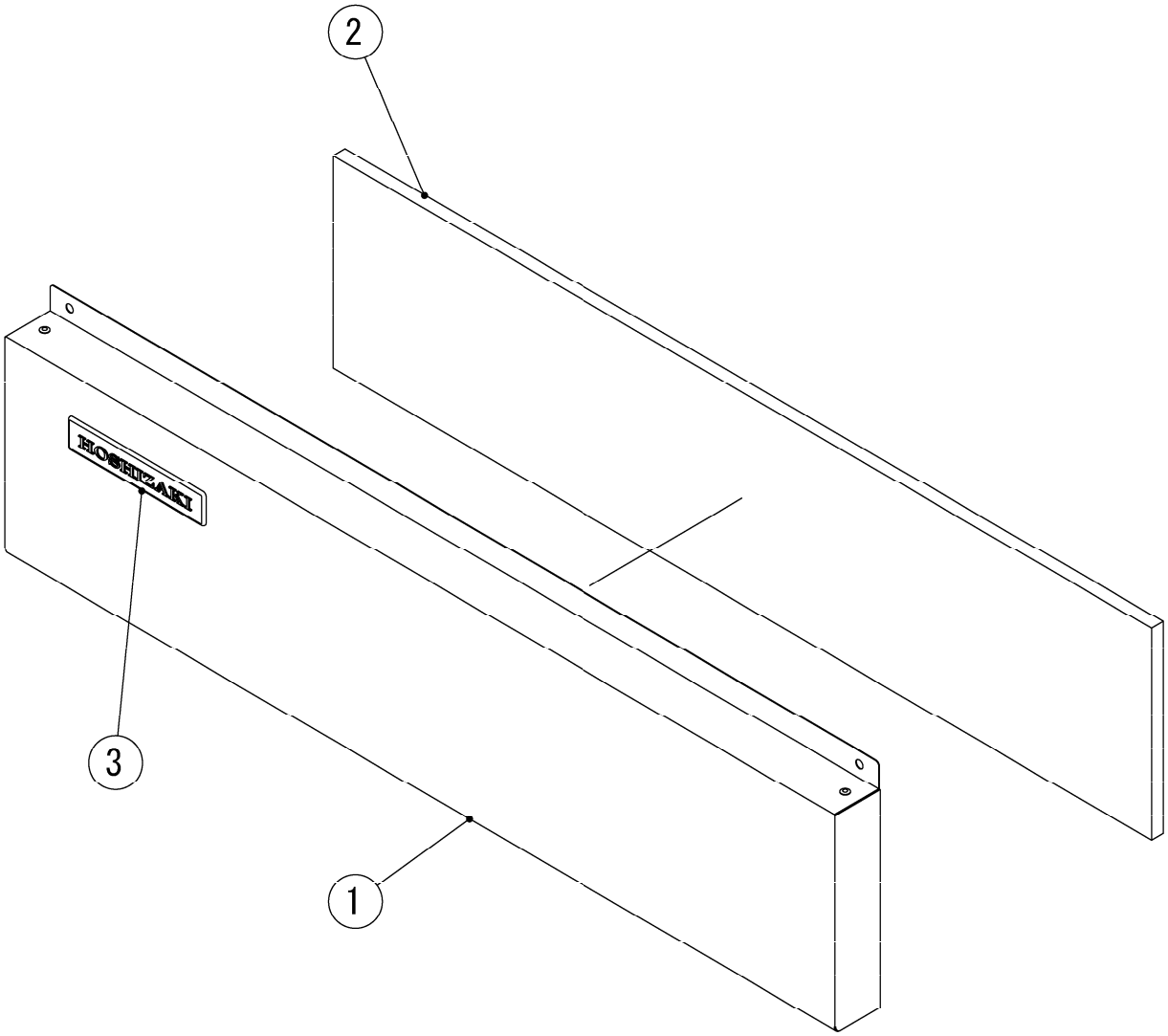

HE

MODEL: **IM-100CNE(-23,-21)** TITLE:**G.FRONT COVER UPPER ASSY**

INDEX NO.	DESCRIPTION	MATERIAL OR MODEL NUMBER	PART NUMBER	REQ'D NUMBER			
				B-1			
1	FRONT COVER UPPER		3Y6320G01	1			
2	INSULATION - FRONT(A)		4Y7621P01	1			
3	EMBLEM		340842-01	1			

H. FRONT COVER (R) ASSY

(B－1) and later

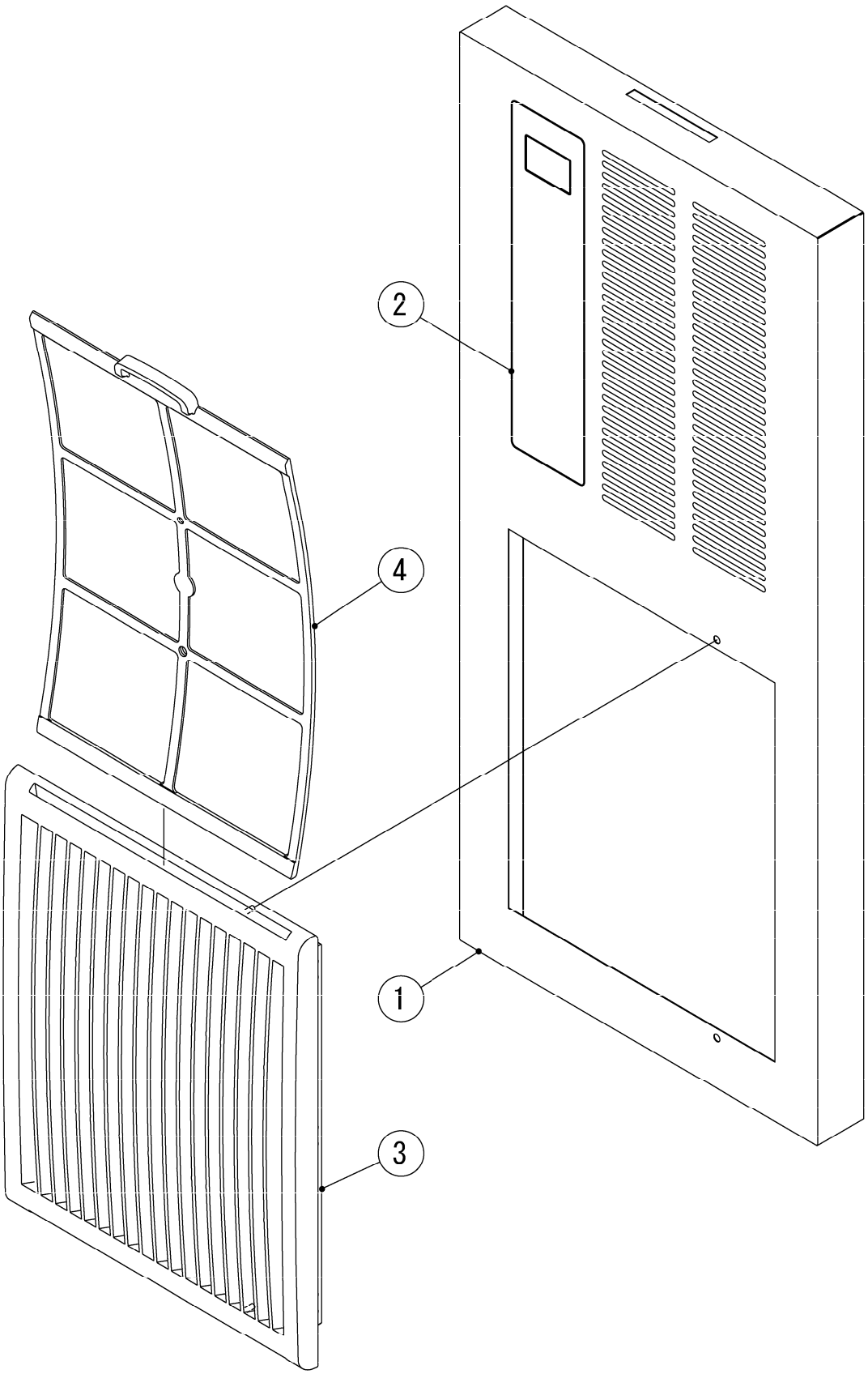

HE

MODEL: **IM-100CNE(-23,-21)** TITLE:**H.FRONT COVER(R) ASSY**

INDEX NO.	DESCRIPTION	MATERIAL OR MODEL NUMBER	PART NUMBER	REQ'D NUMBER			
				B-1			
1	FRONT COVER(R)		3Y6323G01	1			
2	OPERATION LABEL		375116L05	1			
3	LOUVER		1H4811P01	1			
4	AIR FILTER		2X0416G01	1			

J. FAN MOTOR ASSY

(B−1) and later

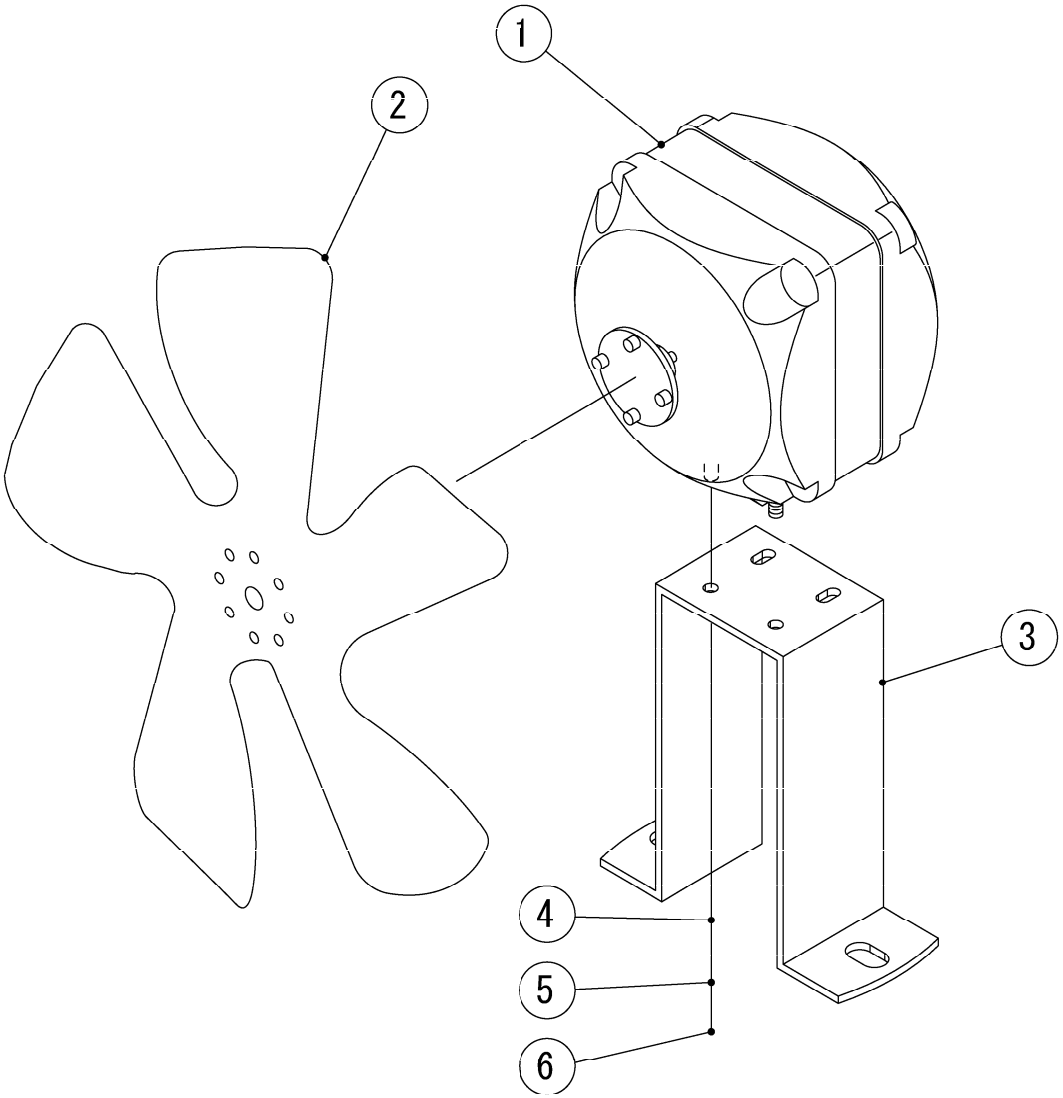

HE

MODEL: **IM-100CNE(-23,-21)** TITLE:**J.FAN MOTOR ASSY**

INDEX NO.	DESCRIPTION	MATERIAL OR MODEL NUMBER	PART NUMBER	REQ'D NUMBER			
				B-1			
1	FAN MOTOR		P00022-01	1			
2	FAN		451771-01	1			
3	BRACKET - FM		3Y6143M01	1			
4	FLAT WASHER		FWPL04S0	2			
5	SPRING WASHER		FWSP04S0	2			
6	NUT		FNH104S0	2			

K. ACTUATOR MOTOR ASSY (B-1) and later

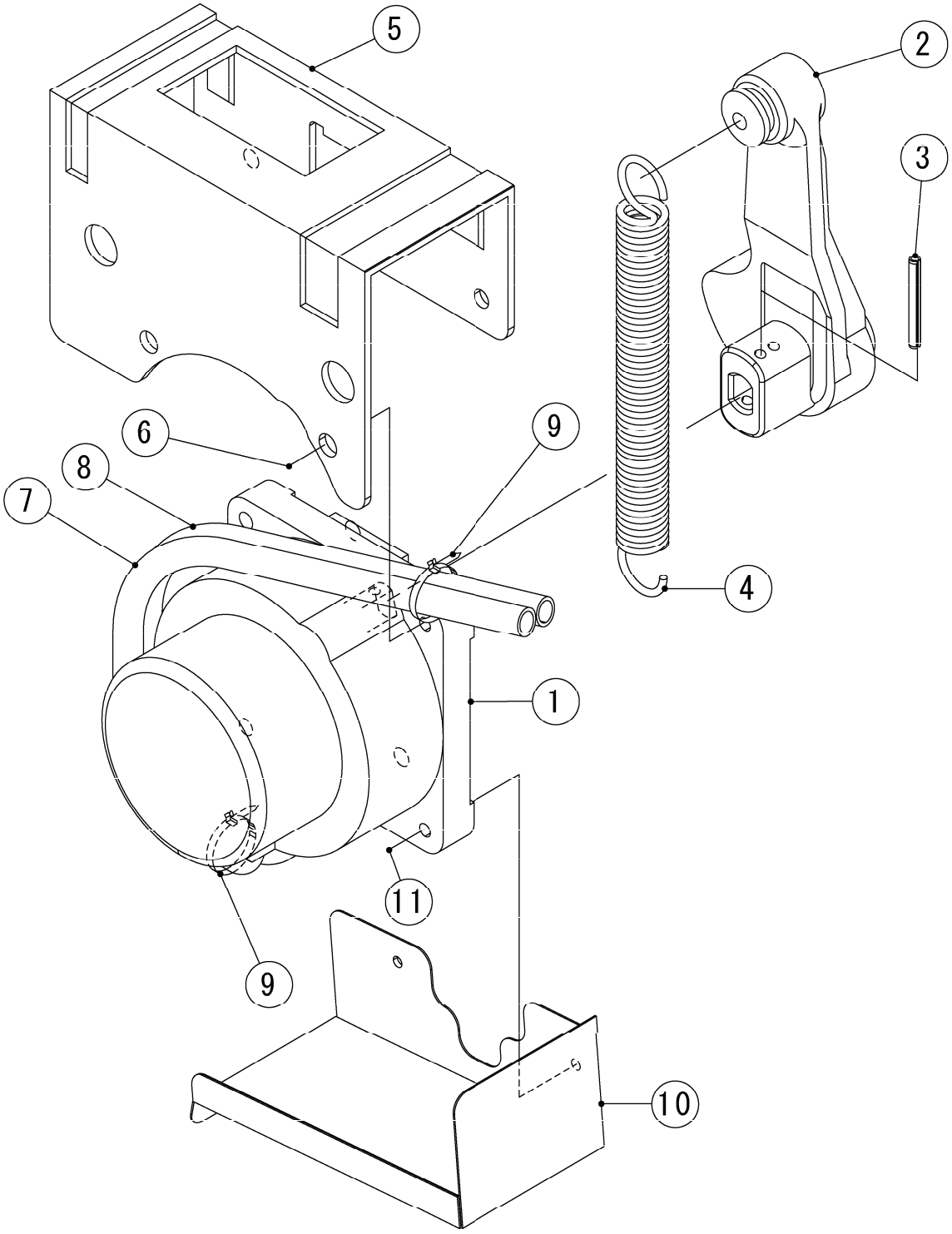

HE

MODEL: **IM-100CNE(-23,-21)** TITLE:**K.ACTUATOR MOTOR ASSY**

INDEX NO.	DESCRIPTION	MATERIAL OR MODEL NUMBER	PART NUMBER	REQ'D NUMBER			
				B-1			
1	ACTUATOR MOTOR		P01869-01	1			
2	CAM(A)		306543G03	1			
3	SPRING PIN 3*28		712S-0328	1			
4	SPRING		4H0287-01	1			
5	BRACKET - AM		3Y2924M01	1			
6	HEX HEAD BOLT (SPRING WASHER AND FLAT WASHER)		FBK0620S0	2			
7	TUBE - SILICONE		4Y6751Z02	1			
8	TUBE - SILICONE		4X8017-07	1			
9	TIE	CV-150	7920-0003	2			
10	COVER - AM		3Y5292M01	1			
11	HEX HEAD BOLT (SPRING WASHER AND FLAT WASHER)		FBK0416S0	2			

L. WATER PAN ASSY

(B−1) and later

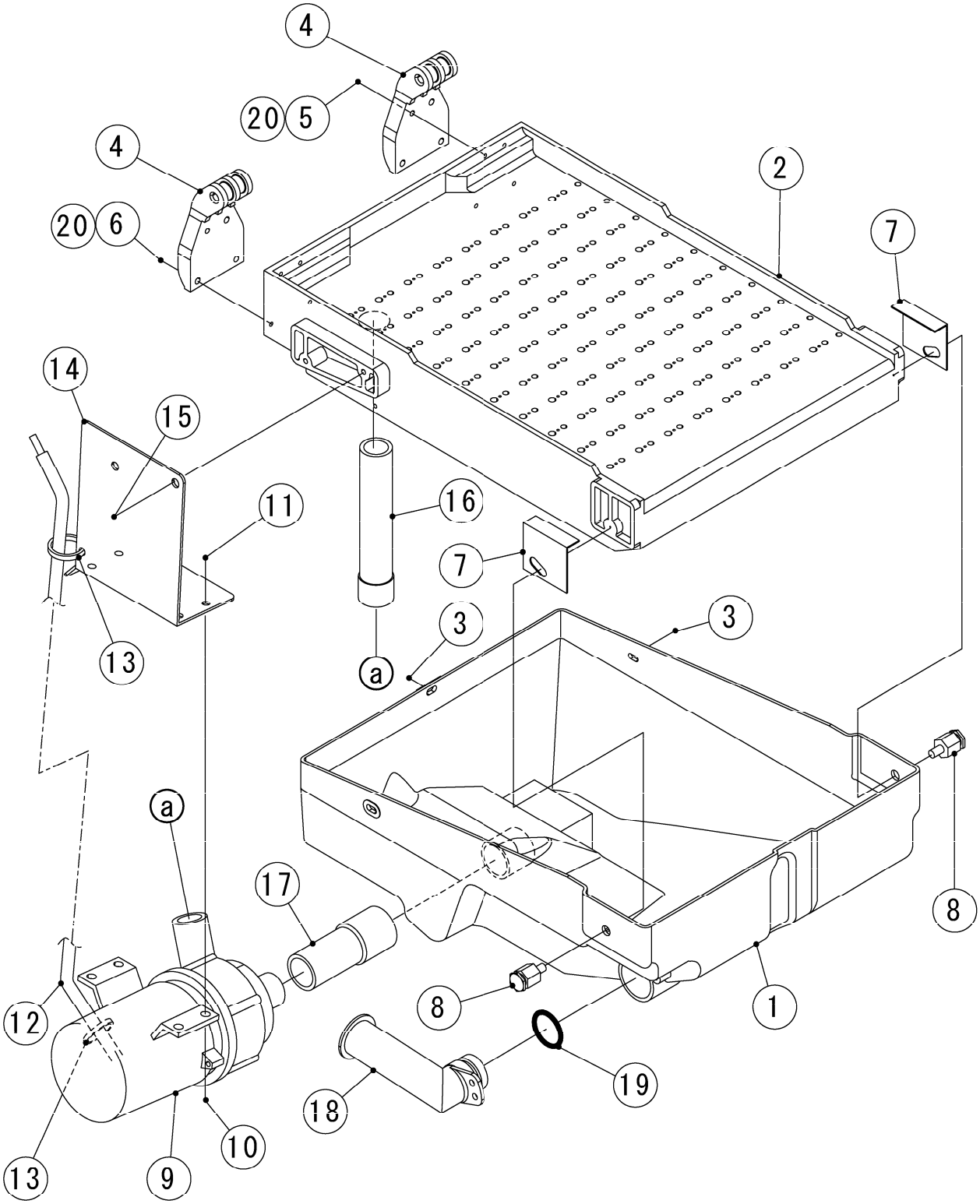

HE

MODEL: **IM-100CNE(-23,-21)** TITLE:**L.WATER PAN ASSY**

INDEX NO.	DESCRIPTION	MATERIAL OR MODEL NUMBER	PART NUMBER	REQ'D NUMBER			
				B-1			
1	WATER TANK		2H2286G01	1			
2	WATER PAN ASSY		2H0833G02	1			
	WATER PLATE	(IM-100CNE-21)	1H0291G01	1			
3	T2 TRUSS HEAD SCREW		FT20410M0	4			
	TRUSS HEAD SCREW	(IM-100CNE-21)	FST0410S0	4			
4	WATER PAN HANGER		3H2059-01	2			
5	TRUSS HEAD TAPPING SCREW T2	(IM-100CNE,-23)	FT20420M0	4			
6	T2 TRUSS HEAD SCREW	(IM-100CNE,-23)	FT20416M0	4			
7	BRACKET		402957-01	2			
8	SCREW SPRING HOOK		4H2582G01	2			
9	PUMP MOTOR		P01868-01	1			
10	HEX HEAD BOLT (SPRING WASHER AND FLAT WASHER)		FBK0412S0	4			
11	FLANGE NUT		FNHF04S0	4			
12	TUBE - SILICONE		4Y7388Z01	1			
13	TIE	CV-100	7920-0002	2			
14	BRACKET - PUMP		4Y7503M01	1			
15	TRUSS HEAD TAPPING SCREW T2		FT20516M0	4			
	TRUSS HEAD MACHINE SCRE	(IM-100CNE-21)	FST0512S0	4			
16	TUBING - PUMP DISCHARGE		4Y7517G01	1			
17	SUCTION TUBE		4Y7518G01	1			
18	PIPE - DRAIN		315530-01	1			
19	O-RING		7611-G025	1			
20	TRUSS HEAD MACHINE SCRE	(IM-100CNE-21)	FST0420S0	8			

M. BIN CONTROL SWITCH

(B－1) and later

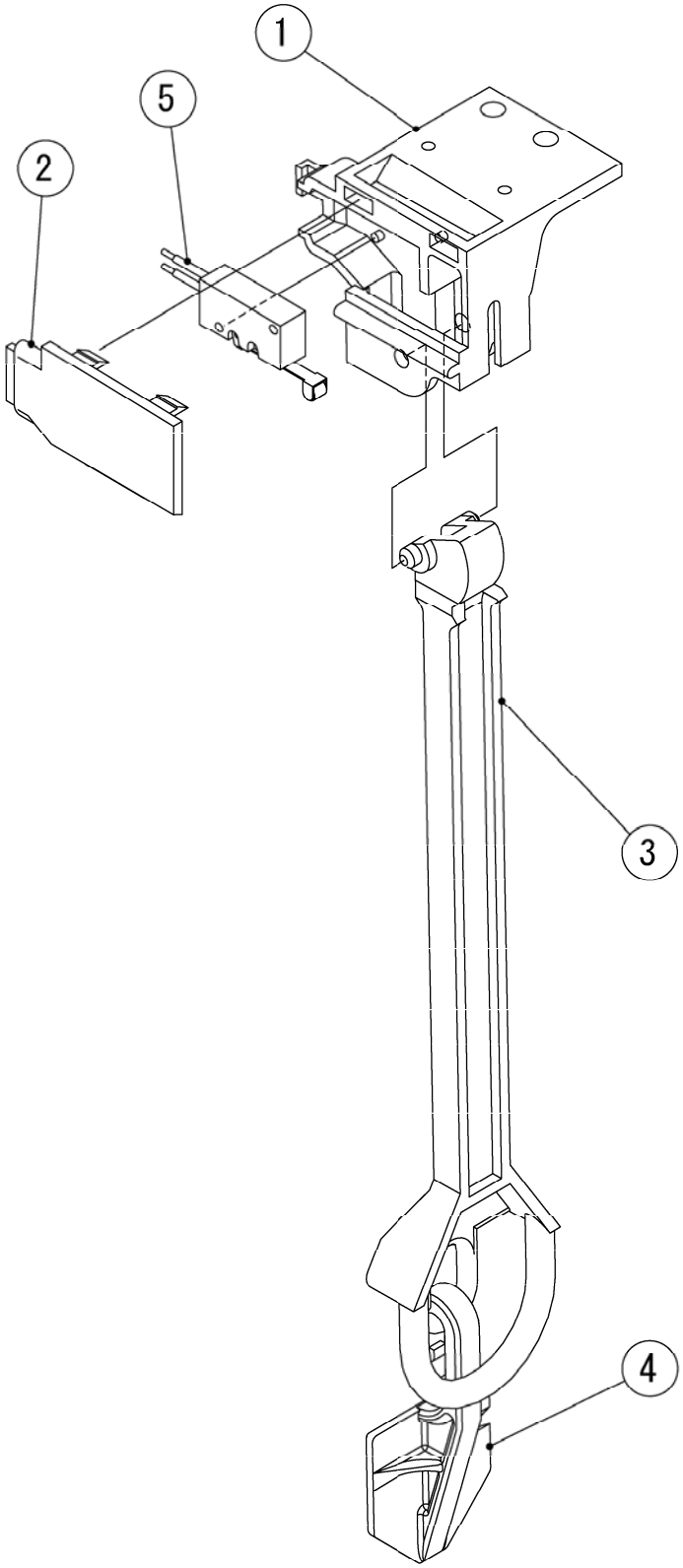

HE

MODEL: **IM-100CNE(-23,-21)** TITLE:**M.BIN CONTROL SWITCH**

INDEX NO.	DESCRIPTION	MATERIAL OR MODEL NUMBER	PART NUMBER	REQ'D NUMBER			
				B-1			
1	SWICH BOX		2H2043-01	1			
2	SWITCH BOX COVER		4H8785-01	1			
3	SWITCH ACTUATOR		3H1369-02	1			
4	DETECTOR		311044-01	1			
5	MICRO SWITCH		456432-02	1			

N. ACCESSORIES

(B−1) and later

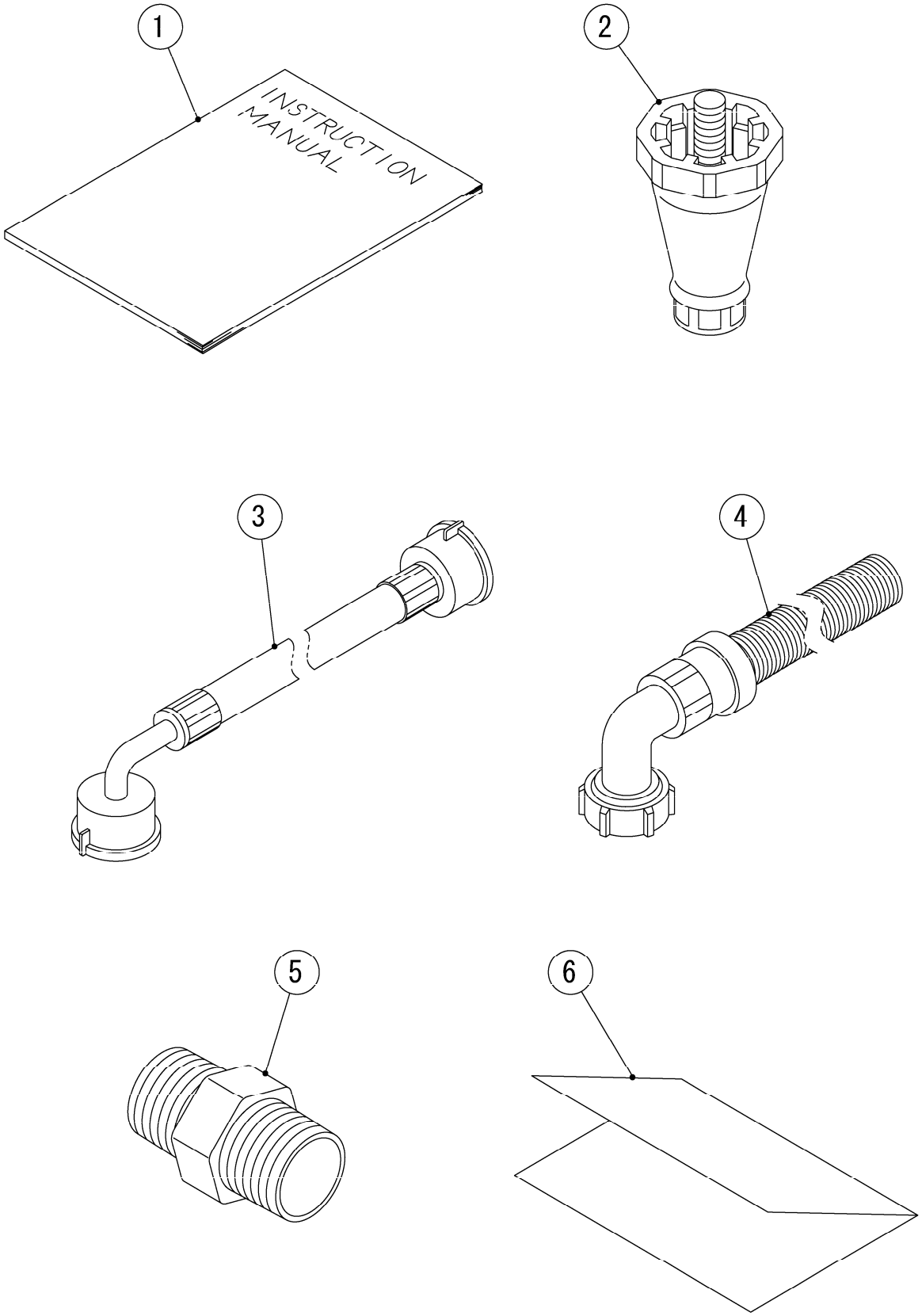

HE

MODEL: **IM-100CNE(-23,-21)** TITLE:**N.ACCESSORIES**

INDEX NO.	DESCRIPTION	MATERIAL OR MODEL NUMBER	PART NUMBER	REQ'D NUMBER			
				B-1			
1	INSTRUCTION MANUAL		L1E1EC201	1			
2	LEG		446729-01	5			
3	INLET HOSE		450722-01	1			
4	OUTLET HOSE		452365-01	1			
5	NIPPLE		4H6125-01	1			
6	INSTRUCTION MANUAL		121594L01	1			