EUHOMY

Car Refrigerator

Instruction Manual

SKU: CFJ-30

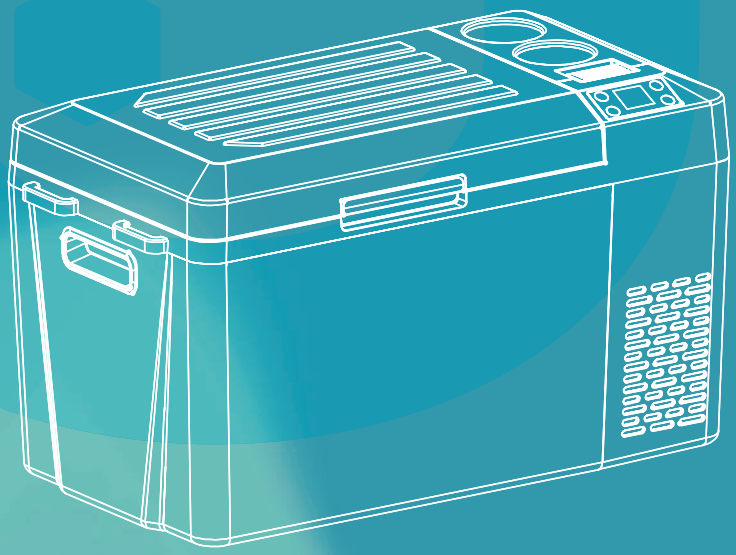

Email: support@euhomy.com

Facebook: @Euhomy.Official

Congratulations

Dear Customer:

Welcome to the Euhomy family. Thank you for purchasing one of our products.

Our goal is to provide you with superior service. If there is anything missing from or wrong with your order, or if you have any questions about using our ice maker, PLEASE contact us.

Email: support@euhomy.com
Facebook: @Euhomy.Official

The Euhomy team is available 24/7 to address your questions, comments, and concerns. Your satisfaction is our ultimate goal. We want to make everything right so you'll share your positive experience with other shoppers on Amazon.

If you experience any problems, please send an email to support@euhomy.com.

Our mission:
* To be the most trusted appliance brand.
* To create practical, compact appliances that better your life.

Be sure to register at

www.euhomy.com/register

for updates, warranty, and other relevant information.

Contents

Introduction to Product Functions	02
Car Refrigerator Operation	03-04
Optional Operation Method	05
Using the Detachable Battery and Solar Charging Port	06
Problems and Troubleshooting	07
Failures and Solutions	08
Technical Parameters	09
Standard Packing List	10
Safety Notice	10
Applications	11
Car Refrigerator Electrical Schematic	12

Introduction to Product Functions

▲ Before using the refrigerator, please read this manual carefully. Keep the manual for future reference.

- Before using your refrigerator for the first time, clean it inside and out with a damp cloth.
- Do not fill the refrigerator with corrosive liquids. Do not pour liquids directly into the refrigerator.
- When the refrigerator will not be used for a long time, please disconnect the power supply and keep the refrigerator dry.
- Please clean the inner compartment regularly to prevent bacteria and odors from forming, and to ensure food safety.
- Shut down the refrigerator and battery (if used) before pulling the refrigerator by the handle.

▲ Connect the power supply.

- Find the DC power cord in the box. Connect the DC plug to the power outlet of the car refrigerator.
- Please place the refrigerators in the back-up of the car, seats, etc....
- Lay out power cords to suit the interior space of your car. Insert the cigarette lighter plug (one side of the power cord) into the car cigarette lighter hole.
- Press the power button to turn it on.

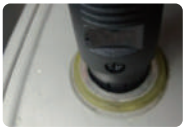

Connect the car cigarette lighter

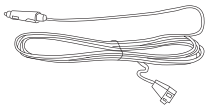

DC power cord

Connect the car refrigerator (Standard Style)

The refrigerator can be connected to more than one source of power.

The refrigerator can be directly connected to the 12V/24V DC power supply.

If the refrigerator is used with a 100–240V power supply, an AC adapter should be used.

Car Refrigerator Operation

Car battery protection: voltage reference

- The built-in Eco electronic control module can automatically monitor your car battery's voltage. The refrigerator will automatically shut off when excessive power is consumed, thereby preventing draining the battery or interfering with starting your car.

Voltage	Voltage protection (factory default is H)		
	H (High)	M(Medium)	L(Low)
12V	11.3V off / 12.5V on	10.1V off / 11.4V on	8.5V off/9.6V on
24V	24.6V off / 26V on	22.3V off / 23.7V on	21.3V off/22.7V on

- Note: When the refrigerator is running, "off "or "on" indicates the stop or start of the compressor.

▲ Parts schematic

① Compressor cover
② Power inlet
③ Recessed handle
④ Control panel
⑤ USB port
⑥ Battery slot
⑦ Battery slot cover
⑧ Door gasket
⑨ Storage compartment
⑩ Removable divider

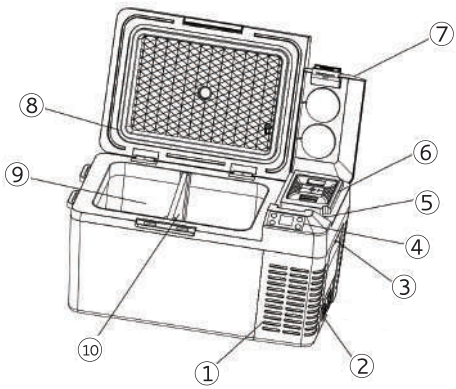

EUHOMY
Live the cool life

Optional Operation Method

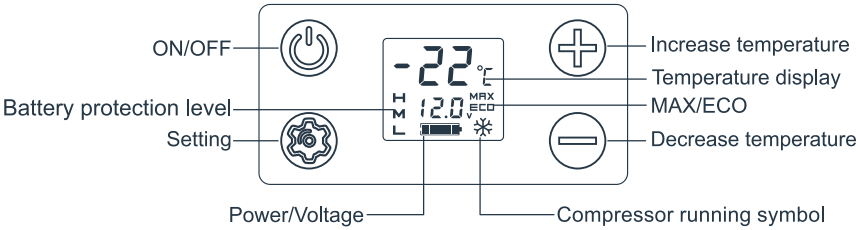

Item	Description	Explanation
	Power button	Press to switch the fridge on. Long-press the power button for 3 seconds to turn off the refrigerator.
	Settings button	Press the button to select MAX or ECO mode. • In MAX mode, the compressor runs quickly to reduce temperature. • In ECO mode, the compressor runs slowly to save energy.
	Temperature increase button	Press the button once to increase the set temperature by 1 degree. Press and hold the button to increase the set temperature quickly.
	Temperature decrease button	Press the button once to decrease the set temperature by 1 degree. Press and hold the button to decrease the set temperature quickly.
+	Temperature scale selection	Press and simultaneously for 3 seconds to change the temperature units between ℉ and ℃ Please be sure no any symbol is flashing when you use this function.

Battery protection setting (factory default voltage is H)

- Battery protection levels: H (high) > L (low) > M (medium)
- Press for 3 seconds to access the battery protection setting. Press the button again to switch between H, L, and M.
- The set level will flash for 3 seconds, then exit and save the current setting.

Battery Protection Setting (factory default voltage is H)

- The on-board refrigerator has the power failure memory function. When the refrigerator is powered off, the working state (ON/OFF, working mode, etc.) before the shutdown can be automatically restored at the next startup without resetting.

  ECO: Energy-saving cooling MAX: Powerful cooling

Optional Operation Method

Removable partition

- A partition can be inserted in the middle of the compartment. This partition serves only to divide the compartment for easy organization of items. It should be noted that the presence or absence of the partition does not change the function of the device or the temperature display.

EUHOMY
Live the *cool life*

Using the Detachable Battery and Solar Charging Port

Battery installation (Batteries need to be purchased separately.)

- Open battery slot cover.
- Press the battery button continuously until the indicator lights up.
- Press the power button to turn on the fridge.

  Tip: Please set battery protection level to "L" if you are using the battery. If the control panel displays "E1" then the charge in the battery is low.

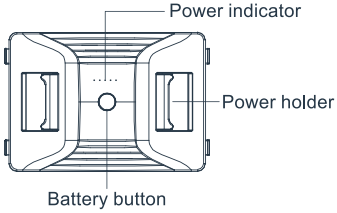

- Press battery button continuously to switch off the battery. Do this when you don't need the battery or plan to store the fridge.
- Squeeze the two battery holders to take out the battery.

Charge the battery

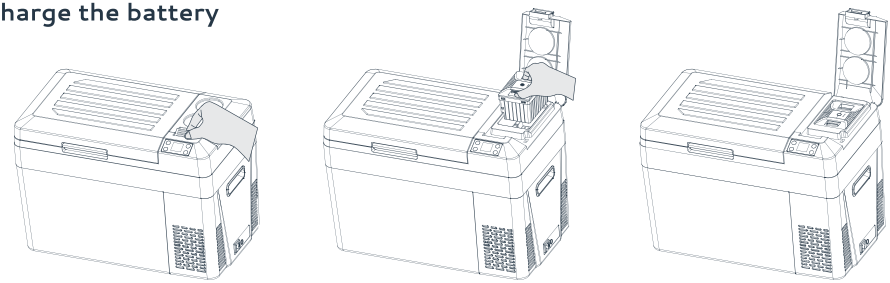

① ② ③

- Keep the battery in the slot.
- Connect the fridge with 12V/24V power by cigarette lighter power cable or home socket by AC/DC adapter.
  The battery will charge even though the fridge is not switched on.
  WARNING!!! Please do not charge the battery in temperatures higher than 109 ℉

Problems and Troubleshooting

Advice: In the case of any abnormal situation that cannot be resolved through simple fault analysis, please contact Customer Service for assistance.

▲ Car refrigerator does not work

- Check that the power is connected properly.(Check if the plug is loose or positive and negative poles are reversed.)
- Check that the power button on the control panel is turned on.
- Check that the cooling ventilation is normal.
- Check if the fuse is blown.

▲ Poor cooling performance

- Check that the lid is closed properly.
- Check if the door seal is damaged or deformed.
- Check if there is poor ventilation around the fridge.
- Check that the temperature is set properly.

▲ Abnormal noise

- Refrigerator is not set on a flat, level surface.
- Check for vibrations in surrounding objects.
- Parts inside the refrigerator have come loose or fallen off.

▲ Refrigerator condensation

- It is normal for some condensation to collect on the surface of the refrigerator when humidity is more than 75%.

▲ Definition of error codes

Error Code	Error Type
E1	Low input voltage
E2	Fan fault
E3	Input voltage fault due to compressor starting and stopping frequently
E4	Low rotational speed of compressor
E5	Overheating of controller chip
E6	Temperature sensor wire disconnected

Refrigerator is not put on a flat level surface.
Check for vibrations in surrounding objects.

Failures and Solutions

▲ E1:Low input voltage

- Failure 1: Refrigerator power cord was inserted into cigarette lighter before the car started.
  Solution 1: Wait to connect the fridge until after the car is started.
- Failure 2: Input voltage of the adapter is too low.
  Solution 2: Adjust the battery protection level to M or L. If this does not work, replace the adapter.

▲ E2: Fan fault

- Please replace the fan when a fan malfunction has been indicated.

▲ E3: Input voltage fault due to compressor starting and stopping frequently

- When the refrigerator is used in a car and E3 appears:

  ① Please shut down the refrigerator for 5 minutes and then restart it.

  ② If this does not work, please see E1 for solutions.

- When the refrigerator is connected via adapter and E3 appears:

  ① Please adjust battery protection level to M or L.

  ② If this does not work, please replace the adapter.

▲E4: Low rotational speed of compressor

- Please adjust the input voltage and restart the refrigerator.

▲ E5: Overheating of controller chip

- Please power off the refrigerator for 5 minutes. Check to see if the overheating may be caused by poor ventilation around the compressor.

Technical Parameters

SKU	CFJ-30
Input voltage	DC12V/24V, AC100–240V
Temp control range	-8°F to 50°F
Cryogen	R134a
Rated power	45W±20%
Rated current	5A/2.5A
Net weight	26.5pounds
Product size(L*W*H)	23.1*12.6*16.2in
Packing Size(L*W*H)	24.2*14.4*17.9in

Standard Packing List

1.Car Refrigerator

2.DC cable

3.AC cable and adapter

4.Towel

Safety Notice

- Ensure that the refrigerator is connected to the proper voltage at all times.
  (Specs label shows the approved voltage for the car refrigerator).
- Do not pour any liquid directly into the car refrigerator.
- Never modify the refrigerator on your own. To do so may be hazardous to your health.
- Do not expose the refrigerator to rain or other sources of water.

Applications

By keeping a battery on hand, you can ensure that the refrigerator maintains its set temperature in any situation.

When storing ice cream, please set the refrigerator to the lowest temperature and keep the power on constantly.

Prevent health problems from bottled water deterioration caused by high temperatures.

Keep fresh or frozen foods—even luxurious seafood—safe during long trips.

Your car refrigerator effectively preserves the freshness of tea leaves. You can enjoy fresh and delicious tea anytime during your road trip.

The ideal storage temperature for red wine is 50°F -64°F.
The precise temperature control of your Euhomy car refrigerator guarantees the proper storage temperature.

Fruits will not keep in a hot car for more than 2 hours, even with the air conditioning running. But your car refrigerator can keep fruit fresh for a long time.

Did you know? The coating on some sunglasses will peel off at high temperatures! Your car refrigerator is the best place to store your sunglasses.

Cosmetics easily melt and go bad at high temperatures. Keep makeup and other beauty products fresh and safe in your car refrigerator.

There are two closed-loop hooks on one side of the box. You can use these to hang bags or small tools, keeping your hands free when using the car refrigerator.

Car Refrigerator Electrical Schematic

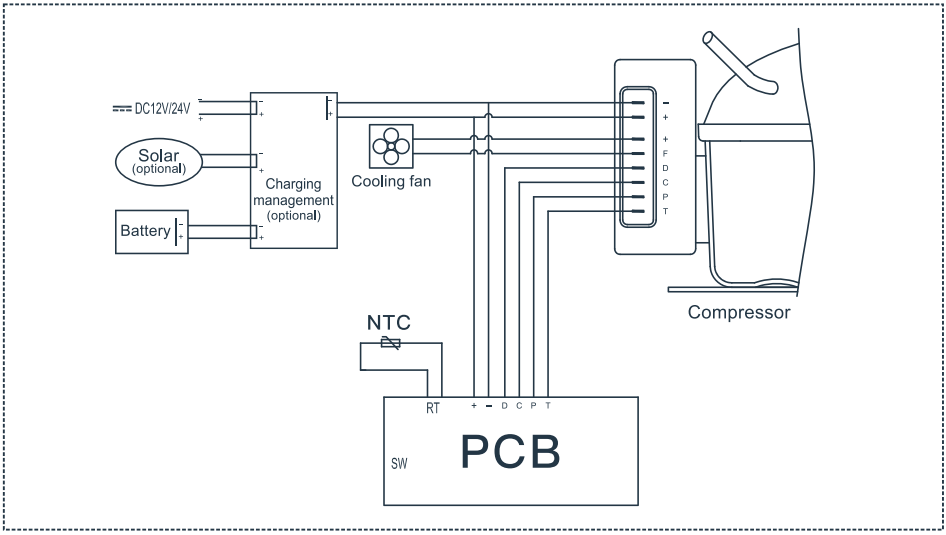

EUHOMY

Live the *cool life*

Email: support@euhomy.com

Facebook: @Euhomy.Official