XINJE **XD series PLC**

DISTRIBUIDOR AUTORIZADO
ventas1@imservo.com – ventas2@imservo.com
0992679083 0963733108

Fast manual

Thank you for purchasing Xinje XD series PLC. This manual mainly introduces the specifications, electrical characteristics and usage methods of XD series PLC for your reference at any time. Before using the product, please read this manual carefully, and safer wiring operation under the premise of fully understanding the content of the manual. For the design method and instructions of XD program, refer to "XD/XL Series Programmable Controller Instruction User Manual" and "XD/XL Series Programmable Controller Positioning User Manual". For the introduction of XD hardware, refer to XD/XL Series Programmable Controller Hardware User Manual.

XD series PLC features:

- Higher instruction processing speed (about 12 ~ 15 times of XC Series)
- XD3 series can expand up to 10 XD series digital and analog module; XD5/XDM/XDC series can expand up to 16 XD series digital and analog module; (XD1/XD2 does not support)
- At most, 2 BD boards and 1 left extended ED module can be expanded (XD1 series and full series 16 points PLC do not support extended BD and extended ED)
- Compatible with most common functions of XC series
- Please use V3.5.1 and later programming software for XD2 series PLC

Safety notes

Control system design notes

Danger!

- Make sure to design safe circuit for application, ensure the control system can work safe when the external power outages or PLC has fault.
- It is important to set emergency brake circuit, protection circuit, interlock circuit for forward reverse rotation, position upper and lower limit interlock switch to prevent from machinery damage.
- For the safe operation of equipment, please design external protection circuit and safety mechanism for output signal related to major accident.
- All the output will be shut down when PLC found system error. The output maybe out of control when the controller circuit has error, please design suitable external control circuit to ensure the normal working of equipment.
- If the PLC output unit is broken, they cannot be controlled to be ON or OFF.
- PLC is designed for indoor electric environment, the power supply system should have lightning protection device, ensure that lightning overvoltage is not applied to the power input or signal input, output terminal of PLC, avoid equipment damage.

Installation and wiring notes

Danger!

- Do not use the PLC in the following places: dust, lampblack, conductive dust, corrosive gas, flammable gas. Exposure to the environment of high temperature, dew, wind and rain. Electric shock, fire, vibration, malfunction, misoperation also can cause product damage.
- Do not make scrap metal and wire drop into the controller vent when wiring, it may cause fire, fault, wrong operation.
- After installing the PLC, make sure there is no foreign object covering the ventilation, otherwise the heat dissipation will be bad and cause fire, fault and wrong operation.
- The wiring of installation box must be solid and reliable, poor contact may result in wrong action.

Caution!

- Please use external power supply for extension module DC24V power.
- For serious interference occasions, please use shield cable for high frequency signal input and output to improve system anti-jamming capability.

Run and maintenance notes

Danger!

- Please connect and dismantle communication cable, extension card and control unit cable after the power supply is shut down, otherwise it may cause equipment damage or incorrect operation.
- It needs to understand the manual well and fully confirm the safety before operation for on-line modification, forced output, RUN, STOP and so on.

Caution!

- Please process the old product as industrial waste.
- Ensure to cut off the power supply when installing and uninstalling the extension card.
- It needs to replace the battery when power is on (ensure the memory data is not lost), when the equipment is running, it must be operated by a professional electrical technician wearing an insulating glove.

Product information

Naming rule

XD M – 60 P T 10 L – E

① ② ③ ④ ⑤ ⑥ ⑦ ⑧

①	Series	XD: XD series PLC
②	Type	1: XD series easy type 2: XD series basic type 3: XD series standard type 5: XD series enhanced type M: XD series motion control type C: XD series motion bus type
③	I/O points	10: 5 input/ 5 output 16: 8 input/ 8 output 24: 14 input/10 output (12input/12 output) 32: 18 input/14 output (16 input/ 16 output) 48: 28 input/ 20 output 60: 36 input/ 24 output
④	Input type	-: NPN input P: PNP input
⑤	Output type	R: relay output T: transistor output RT: hybrid relay and transistor output
⑥	Pulse channel	-: T/RT has 2 pulse output channels -: R has no pulse output channel 4: 4 pulse output channels 6: 6 pulse output channels 10: 10 pulse output channels
⑦	Program capacity	L: large capacity -: normal capacity
⑧	Power supply	E: AC220V C: DC24V

Basic parameters

Table 1: XD series PLC general specification

Item	Specification
Insulation voltage	Up DC500V 2MΩ
Anti-jamming	Noise voltage 1000Vp-p 1us pulse 1 minute
Air	No corrosive, flammable gas
Environment temperature	0℃~60℃
Environment humidity	5%RH~95%RH (no condensation)
USB port※1	USB fast download port, connect PC to download / upload / monitor
COM0※2	RS232 port, connect PC to download / upload / monitor
COM1	RS232, connect PC, HMI to programming or debug
COM2※3※4	RS485, connect intelligent instrument, frequency converter,
COM3	Used to connect the left expansion ED module
Installation	Install on the rail directly with screw M3※5
Ground (FG)	The third ground(cannot ground together with high voltage

※1: XD1, XD2, XDC series PLC have no USB port.
※2: Only XD1 and XD2 series PLC have COM0.
※3: XD1-10/16 has no COM2 which is RS485 port.
※4: For XDC series PLC, COM2 port is divided into RS232 and RS485 port. The two communication ports cannot be used at the same time
※5: The specification of guide rail is DIN46277 and the width is 35mm.
※6: grounding or common grounding should be adopted for grounding instead of public grounding.

Table 2: XD series PLC performance

Item		Specification					
Program execution mode		Cyclic scanning mode					
Programming mode		Instruction, ladder chart					
Processing speed		0.05us					
Memory		FlashROM and lithium battery (3V button battery)					
User program capacity ※1		256KB(XD1/XD2/XD3), 512KB(XD5/XDM), 384KB(XDC)					
		1.5MB(XDM-60T4L-E)					
I/O points ※2	Total points	10	16	24	32	48	60
	Input points	5	8	14 or 12	18 or 16	28	36
	Output points	5	8	10 or 12	14 or 16	20	24
Internal coil (X)※3		1280 points: X0~X77, X10000~X11777, X20000~X20177, X30000~X30077					
Internal coil (Y)※4		1280 points: Y0~Y77, Y10000~Y11777, Y20000~Y20177, Y30000~Y30077					
Internal coil (M, HM)		11008 points /87000 points	XD1/XD2/XD3: M0~M7999【HM0~HM959】※5 XD5/XDM/XDC: M0~M6999【HM0~HM11999】※5				
		Special use※6 XD1/XD2/XD3: SM0~SM2047 XD5/XDM/XDC: SM0~SM4999					
Process (S)		1152 points/ 9000 points	XD1/XD2/XD3: S0~S1023【HS0~HS127】※5 XD5/XDM/XDC: S0~S7999【HS0~HS999】※5				
Timer (T)	Points	672 points/ 7000 points	XD1/XD2/XD3: T0~T575 【HT0~HT95】※5 XD5/XDM/XDC: T0~T4999【HT0~HT1999】※5				
	Specification	100ms timer: 0.1~3276.7s; 10ms timer: 0.01~327.67s; 1ms timer: 0.001~32.767s					
Counter (C)	Points	672 points/ 7000 points	XD1/XD2/XD3: C0~C575【HC0~HC95】※5 XD5/XDM/XDC: C0~C4999【HC0~HC1999】※5				
	Specification	16-bit counter: K0~32,767; 32-bit counter: -2147483648~＋2147483647					
Data register (D)		11048 words/ 90000 words/ 100000 words	XD1/XD2/XD3: D0~D7999【HD0~HD999】※5 XD5/XDM/XDC: D0~D69999【HD0~HD24999】※5				
		Special use※6 XD1/XD2/XD3: SD0~SD2047 XD5/XDM/XDC: SD0~SD4999					
FlashROM register (FD)		7120 words/ 14192 words	XD1/XD2/XD3: FD0~FD5119 XD5/XDM/XDC: FD0~FD8191				
		Special use※6 XD1/XD2/XD3: SFD0~SFD1999 XD5/XDM/XDC: SFD0~SFD5999					
High speed processing ability		High speed counter, pulse output, external interruption					
Password protection		6-bit ASCII					
Self diagnostic function		Power on self-inspection, monitoring timer, syntax checking					

※1: User program capacity refers to the maximum capacity in secret download mode.
※2: Refers to the input and output points that can actually be connected to peripherals.
※3※4: I/O address assignment of expansion module and extended BD (Octal).
※5:【】register area is the default power-off holding area, which cannot be changed.
※6: Special use (non power down holding) refers to the special purpose registers occupied by the system, which can not be used for other purposes. For details, please refer to the relevant contents in the "list of special software components" in the appendix of the instruction manual.
※7: For XD5 series PLC with firmware version v3.4.5 and below, the range of register D is D0 ~ D59999.

Electrical design reference

What is listed here is the configuration of the main body input and output terminal of XD series PLC; the PLC terminal configuration of relay output and transistor output is the same.

Product structure

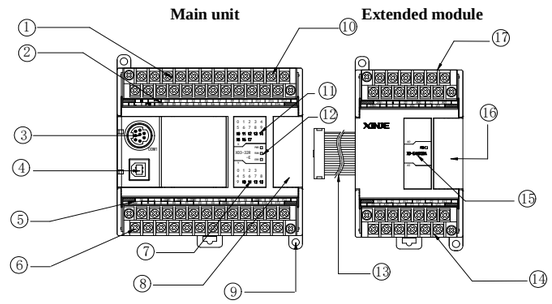

Part name:

①: input terminal, power supply input
②: input label
③: COM 1
④: USB port
⑤: output label
⑥: output terminal, 24V output
⑦: output indicator light
⑧: extended module interface
⑨: mounting hole (2 holes)
⑩: terminal mounting removal screws
⑪: input indicator light
⑫: system indicator light
PWR: power supply indicator light
RUN: running indicator light
ERR: error indicator light
⑬: extended module connection cable
⑭: input/output terminals
⑮: PWR: running indicator light
⑯: extended module interface
⑰: input/output terminals, power supply input terminal

Note: XD3/XD5/XDM series communication port ④ is USB port (for program download and monitoring only), XD1/XD2 series communication port ④ is serial port COM0, XDC series communication port ④ is serial port COM2 (the same port as AB terminal).

Communication port definition

- The XD series PLC has three communication ports (XDC series standard configuration is two communication ports), one USB port (XD1/XD2 series is serial port COM0, XDC is COM2), one RS232 serial port (COM1) and one RS485 port (COM2), one to two of RS232 or RS485 communication ports (COM4/COM5) can be extended through BD board (XD-NS-BD or XD-NE-BD).

Note: COM3 is used to extend the left extended ED module and cannot be used as a separate communication port.

- The USB communication port uses a common USB download cable to connect the PC programming software and PLC. Before the first time use, the USB driver needs to be installed.
- The RS232 serial port (COM1) can be used to connect the programming software of upper computer, PLC, HMI and some meters.

COM1, COM2 (RS232 of XDC) pin diagram:

Mini Din 8-core plug (hole)
Programming cable wiring diagram:

Mini Din 8-core plug (pin) DB9 plug (hole)

Note:
(1) The above figure shows the DVP wiring diagram. The colors of the inner wires of pins 2, 3 and 5 of the DB9 plug (hole) are brown, red and black.
(2) XVP cable needs to connect one more wire on the basis of DVP cable in the above figure, that is, pin 1 of Mini DIN8 connects to pin 7 of DB9.

- The RS485 port (COM2, A is RS485 +, B is RS485 -) can be used to connect HMI, meters, and the programming software of upper computer, PLC. Support MODBUS, X-NET fieldbus communication, free format communication.
- The extended communication port (COM3) can be used to communicate with some instruments. The XD-NES-ED interface of ED module is as follows:

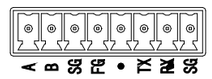

- The extended communication ports (COM4 and COM5) can be used to communicate with some instruments. The models and functions are shown in the table below:

Name	Function
XD-NE-BD	RS485/fieldbus/motion bus communication BD board
XD-NS-BD	RS232 communication BD board
XD-NO-BD	RS485/fieldbus optical fiber communication BD board

Interface diagram is shown as below:

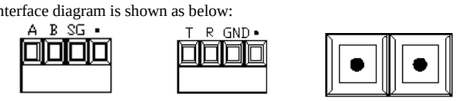

XD-NE-BD XD-NS-BD XD-NO-BD

Power supply specification

- The power supply specifications of XD series PLC basic unit (AC power supply type with "-E" and DC power supply type with "-C" in the model) are shown in the following table:

AC power supply

Item	Content
Rated voltage	AC100V~240V
Voltage allowable range	AC100V~240V
Rated frequency	50/60Hz
Allowable instant power outage time	Interruption time ≤0.5 AC period, space ≥1 second
Impact current	Max below 40A 5ms/AC100V max below 60A 5ms/AC200V
Max consumption power	15W (16 points) /30W (24 points and up)
Power supply for sensor	24VDC±10% 16 points max 200mA, 32 points max 400mA

1: The power cable should be more than 2 mm^2 in order to prevent voltage drop.
2: The programmable controller can continue to work even if there is a power failure

within 10 ms. When the power is cut off for a long time or the abnormal voltage drops, the programmable controller stops working and the output is also in the OFF state. When the power supply is restored, the programmable controller starts to run automatically.

3: The ground terminals of the basic unit and the expansion module are interconnected and reliable grounding.

DC power supply

Item	Content
Rated voltage	DC24V
Voltage allowable range	DC21.6V~26.4V
Rated frequency	120mA DC24V
Allowable instant power	10ms DC24V
Impact current	10A DC26.4V
Max consumption power	15W (16 points) /30W (24 points and up)
Power supply for sensor	24VDC±10% 16 points max 200mA, 32 points max 400mA

◆ The main body of PLC provides DC24V power output (24V, 0V terminals), which can be used as power supply for sensors, the DC24V of 16 points PLC is 200mA/DC24V, and that of 24/32/48/60 points PLC is 400mA/DC24V. Note that this terminal cannot be powered by an external power supply!

◆ [•] are empty terminals. Please do not connect them externally or use them as relay terminals.

◆ The [COM] terminals of the basic unit and the extension unit should be connected to each other.

■ **Input specification and wiring**

The input is divided into NPN and PNP modes. Below, we will introduce the internal structure and wiring mode of the two modes respectively.

● **NPN mode specification**

Item	Contents
Input signal voltage	DC24V±10%
Input signal current	7mA/DC24V
Input ON current	Above 4.5mA
Input OFF current	Below 1.5mA
Input response time	About 10ms
Input signal mode	Contactor input or NPN open collector transistor
Circuit insulation	Photocoupling insulation
Input action display	LED lights when the input is ON

● **NPN wiring example**

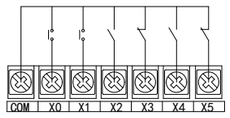

Switch button wiring

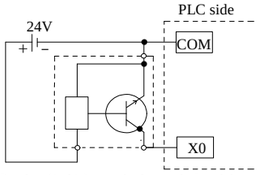

3-wire (NPN) proximity switch wiring

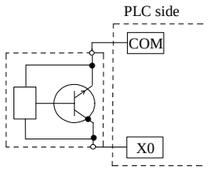

2-wire (NPN) proximity switch wiring

● **PNP mode specification**

Item	Contents
Input signal voltage	DC24V±10%
Input signal current	7mA/DC24V
Input ON current	Above 4.5mA
Input OFF current	Below 1.5mA
Input response time	About 10ms
Input signal mode	Contactor input or PNP open collector transistor
Circuit insulation	Photocoupling insulation
Input action display	LED lights when the input is ON

● **PNP wiring example**

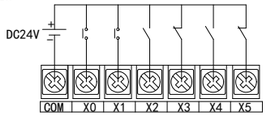

Switch button wiring

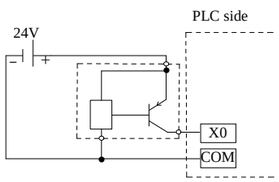

3-wire (PNP) proximity switch wiring

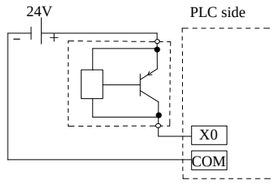

2-wire (PNP) proximity switch wiring

Note: if DC24 V is provided by PLC, it is unnecessary to connect DC0V to COM of input point; if external switching power supply is used, it must be connected.

■ **Output specification and wiring**

The output specification is transistor mode. The internal structure and wiring mode of this mode are described below.

◆ **Output specification**

Relay output

External power		Below AC250V, DC30V
Circuit insulation		Mechanical insulation
Action indicator		LED light
Max load	Resistant load	3A
	Inductive load	80VA
	Lamp load	100W
Min load		DC5V 2mA
Response time	OFF→ON	10ms
	ON→OFF	10ms

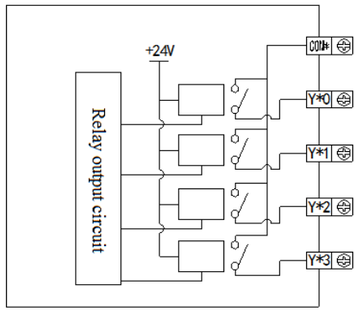

Transistor output

External power		DC5~30V
Circuit insulation		Light coupling insulation
Action indicator		LED light
Max load	Resistant load	0.3A
	Inductive load	8W/DC24V
	Lamp load	1.5W/DC24V
Min load		DC5V 2mA
Open circuit leakage current		Below 0.1mA
Response time	OFF→ON	Below 0.2ms
	ON→OFF	Below 0.2ms

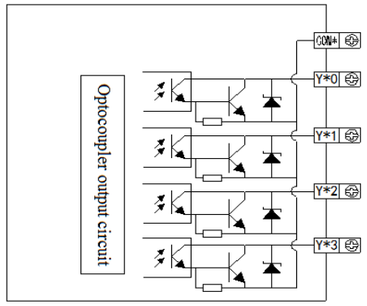

High speed pulse output

Model	RT/T	T4	T6	T10
High speed pulse output terminal	Y0~Y1	Y0~Y3	Y0~Y5	Y0~Y11
External power supply	Below DC5~30V			
Action indicator	LED light			
Max current	50mA			
Pulse max output frequency	100KHz			

Note: when using the high-speed pulse output function, if the pulse frequency is between 100kHz and 200kHz, the normal operation of the servo cannot be guaranteed. Please connect a resistance of about 500ohm between the output terminal and the 24V power supply.

◆ **Relay output processing**

● The relay output type has 2 ~ 4 common terminals. Therefore, each common terminal block unit can drive loads of different power supply voltage systems (such as AC200V, AC100V, DC24V, etc.).

● Between the relay output coil and contactor, the internal circuit of PLC and the load circuit of external circuit are electrically insulated; in addition, the common terminal blocks are also separated from each other.

● When the coil of the output relay is energized, the LED light is ON, and the output contactor is ON.

● The response time from power ON or OFF of output relay coil to ON or OFF of output contactor is about 10ms.

● For the current voltage below AC250V, the output current which can drive the resistance load is 3A/1 point, inductive load below 80VA (AC100V or AC200V) and lamp load below 100W (AC100V or AC200V).

● No leakage current is generated when the output contactor is OFF, and neon lamp can be directly driven.

● Standard service life of inductive AC load such as contactor and solenoid valve: according to the general standard of relay obtained from the service life test of our company, the load of 20VA is about 500000 times, the load of 35VA is about 300000 times, and the load action life of 80VA is about 100000 times. However, if the load is paralleled with the surge absorber, the service life will be significantly prolonged.

Relay output wiring diagram:

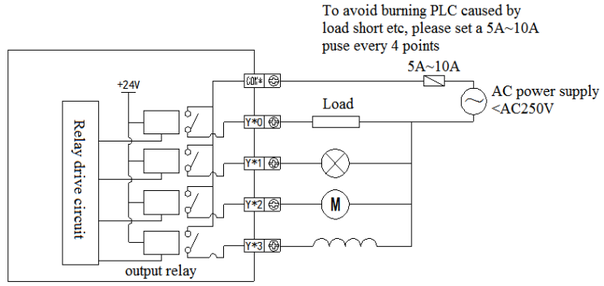

◆ **Transistor output processing**

● The transistor output of the basic unit has 1 ~ 4 common terminals.

● Please use DC5 ~ 30V regulated power supply for load driving.

● The internal circuit of PLC and the output transistor are isolated by photoelectric coupler; in addition, the common terminal blocks are also separated from each other.

● When driving optical coupling, the LED light is ON and the output transistor is ON.

● It takes less than 0.2ms for the PLC to drive (or cut off) the optocoupler to turn the transistor on (or off).

● The current of each output point is 0.3A; however, due to the temperature rise limit, the total current of 4 output points is 0.5A.

● Open circuit current below 0.1mA

Transistor output wiring diagram:

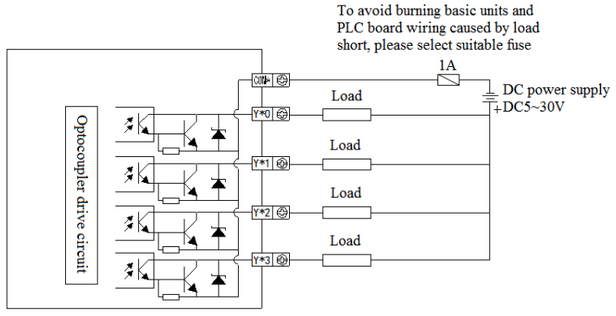

◆ **Output circuit protection**

For inductive load of AC circuit, RC instantaneous voltage absorption circuit should be considered for external circuit; freewheeling diode should be added for inductive load of DC circuit, as shown in the figure below:

● **DC load**

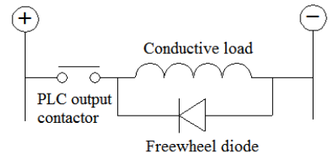

Note: freewheeling diode IN4007.

● **AC load**

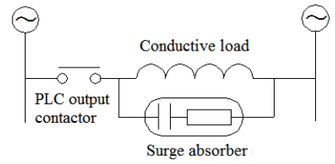

Note: surge absorber R=200Ω 2W, C=0.022uF 250V AC.

Product dimension and installation

■ **Installation**

The basic unit and expansion module can be installed by guide rail or screw.

Use DIN46277 rail

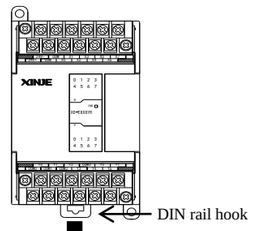

Screw installation

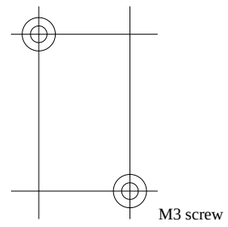

The PLC unit and expansion module are installed on DIN46277 rail (width 35mm); to remove, just pull down the assembly hook of DIN rail and take down the product.

■ **Product dimension** (unit: mm)

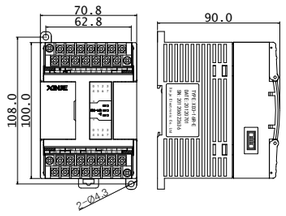

Suitable model

Series	Points
XD1	10/16
XD2	
XD3	
XD5	

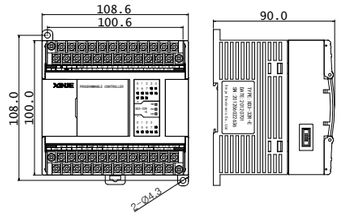

Suitable model

Series	Points
XD1	24/32
XD2	
XD3	
XD5	
XDM	
XDC	

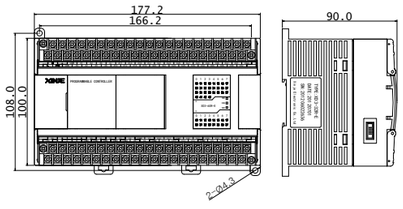

Suitable model

Series	Points
XD2	48/60
XD3	
XD5	
XDM	
XDC	