UniFi® Access Access Hub

ui.com/install

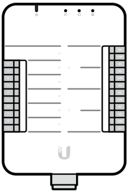

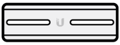

1

ui.com/install

A

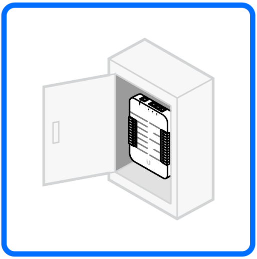

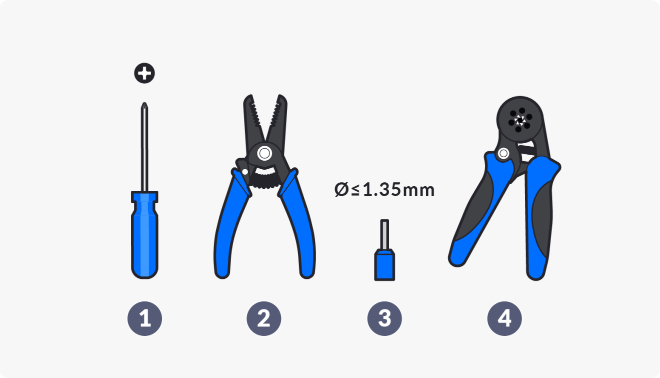
Ø≤1.35mm
1
2
3
4

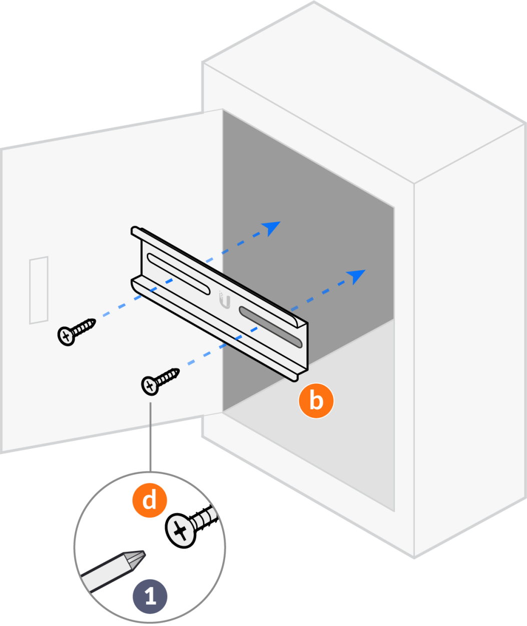

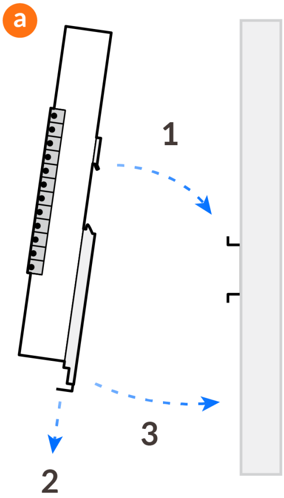

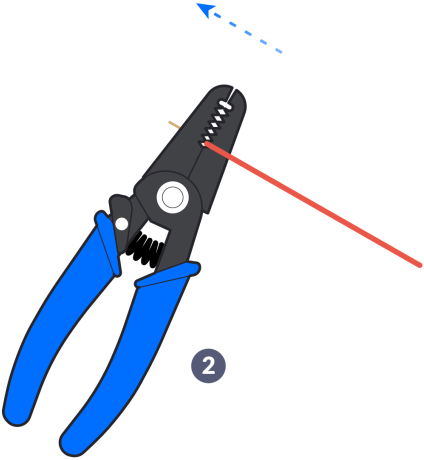

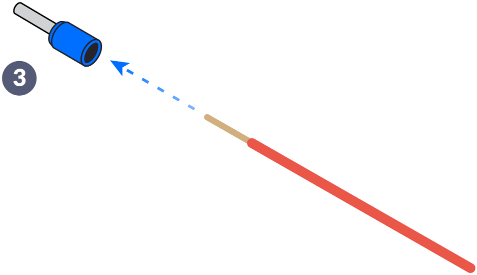

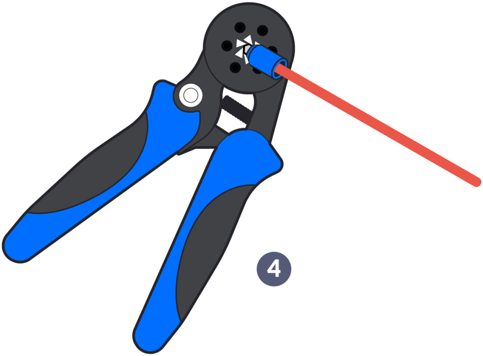

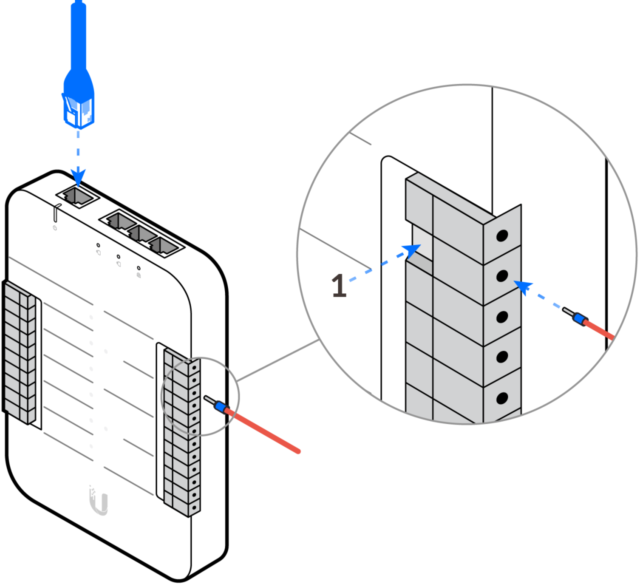

Ⓑ

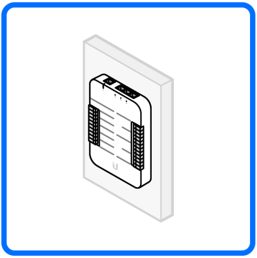

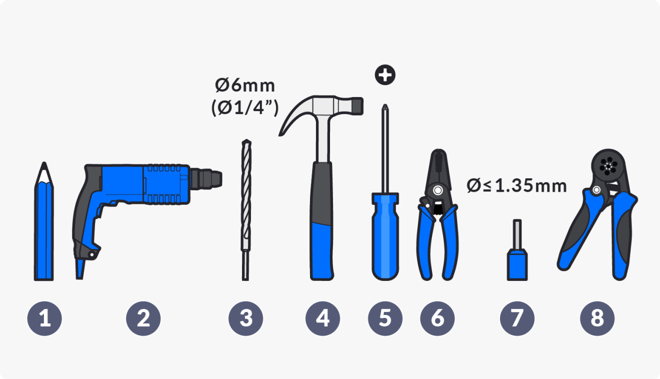
Ø6mm
(Ø1/4")
Ø≤1.35mm
1
2
3
4
5
6
7
8

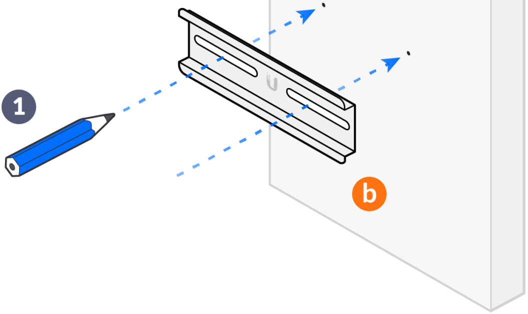

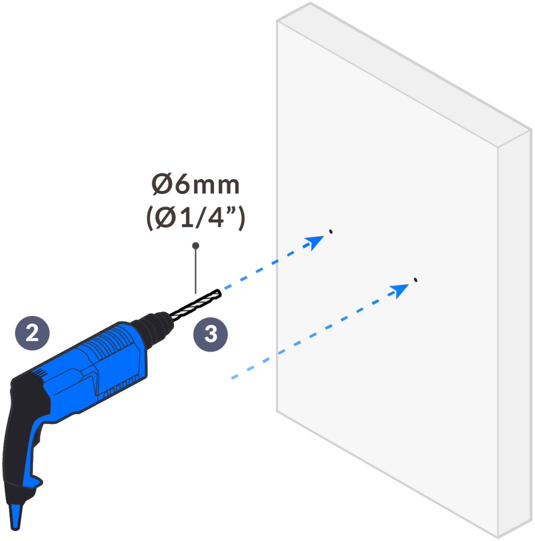

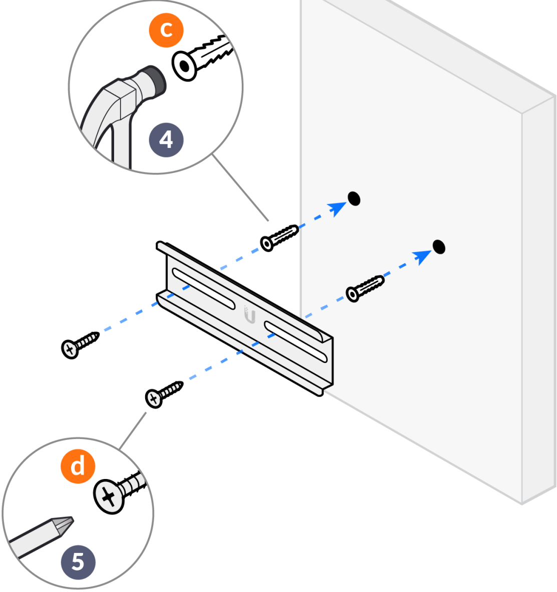

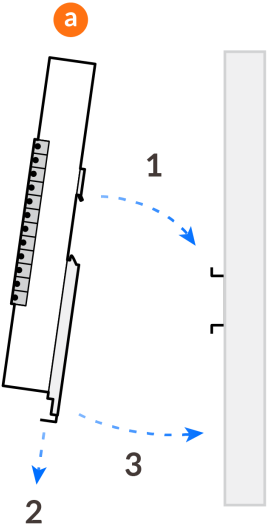

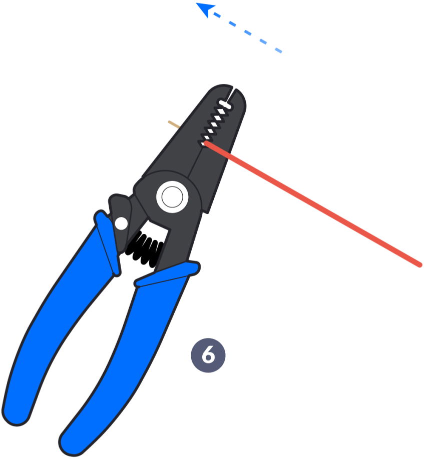

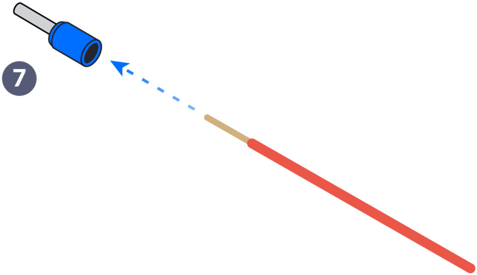

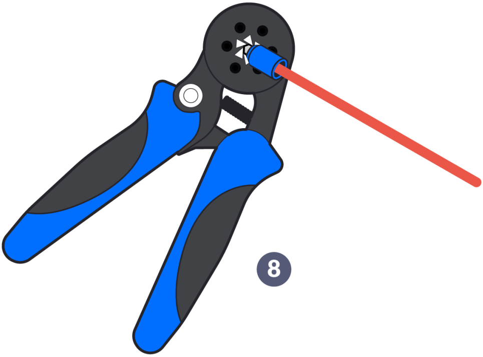

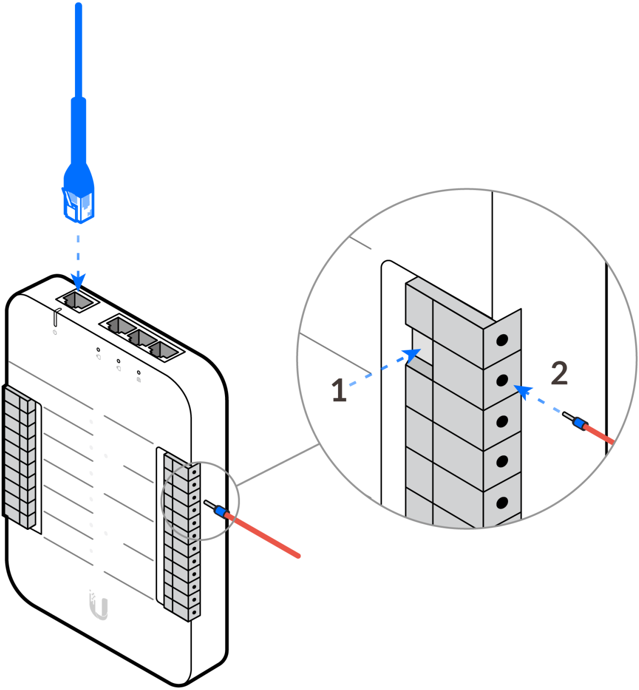

2

ui.com/install

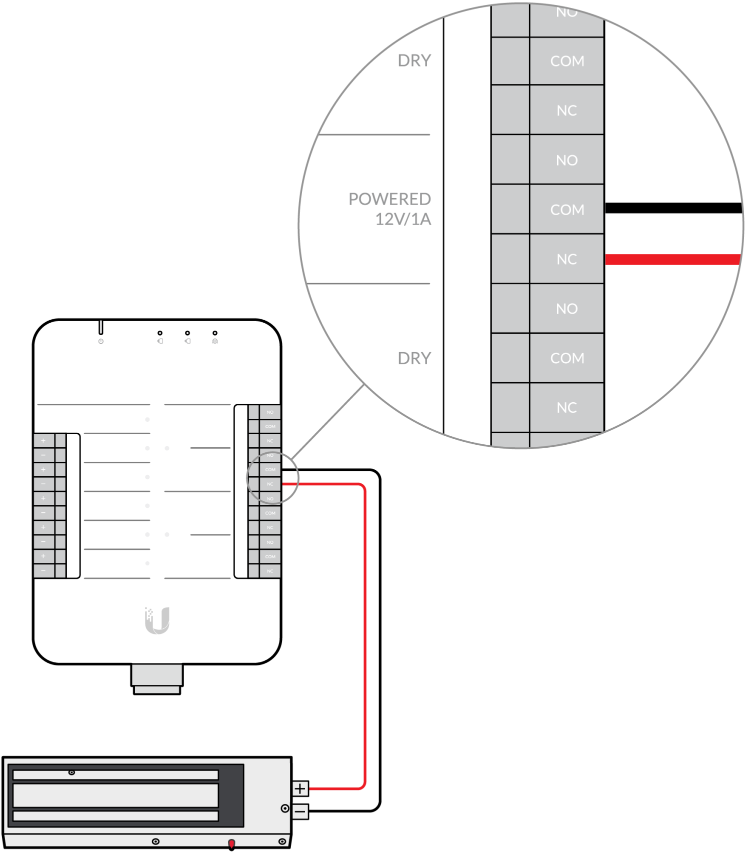
NO
DRY
COM
NC
NO
POWERED
12V/1A
COM
NC
NO
DRY
COM
NC
+
−

Fail-Safe Lock

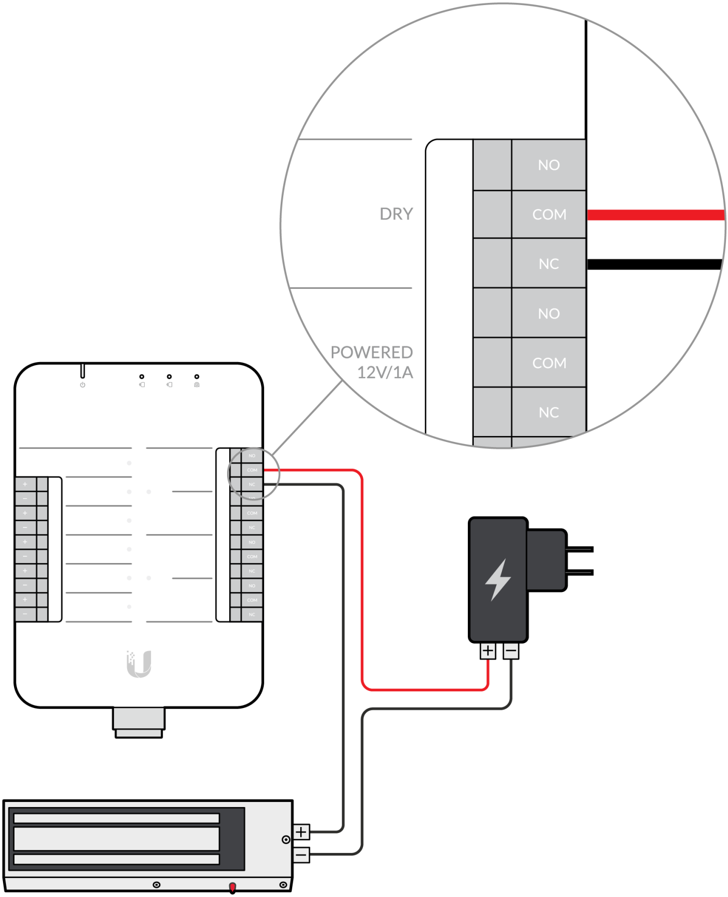
NO
COM
NC
NO
COM
NC
DRY
POWERED
12V/1A
+
−
+
−

Fail-Safe Lock

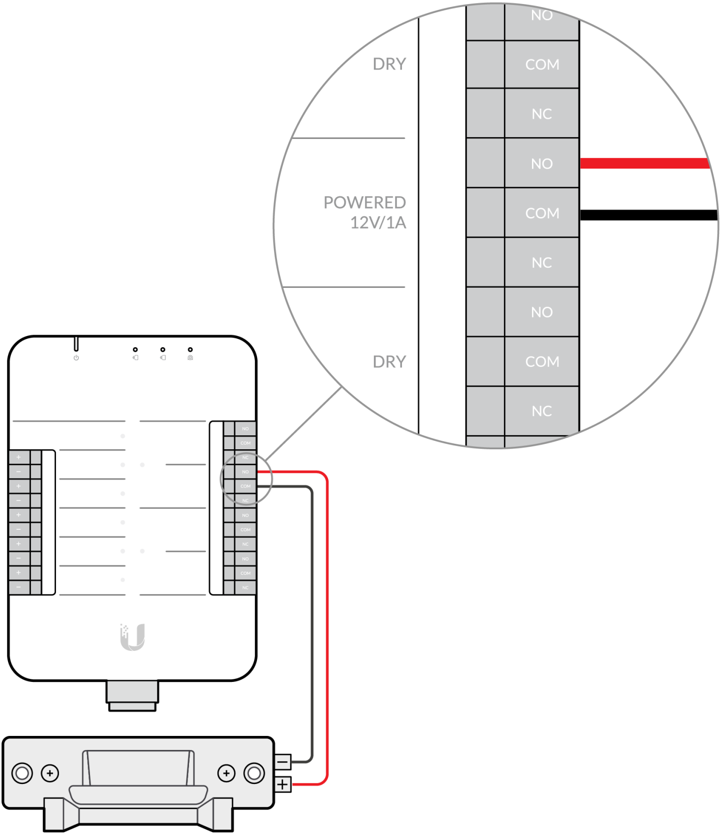
NO
DRY
COM
NC
NO
POWERED
12V/1A
COM
NC
NO
DRY
COM
NC

Fail-Secure Lock

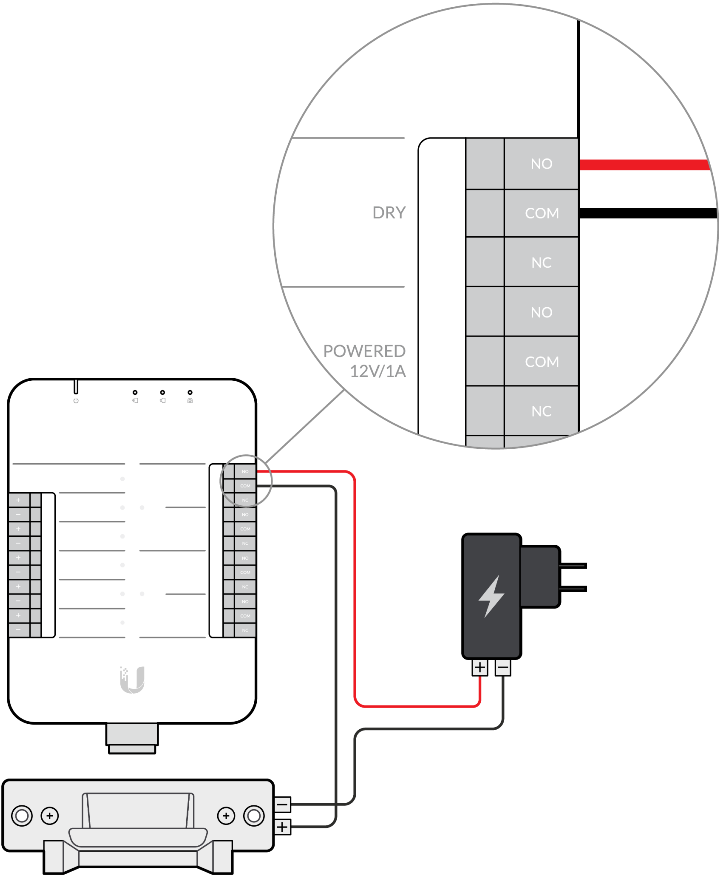
DRY
POWERED
12V/1A
NO
COM
NC
NO
COM
NC
+
−
−
+

Fail-Secure Lock

Push Button

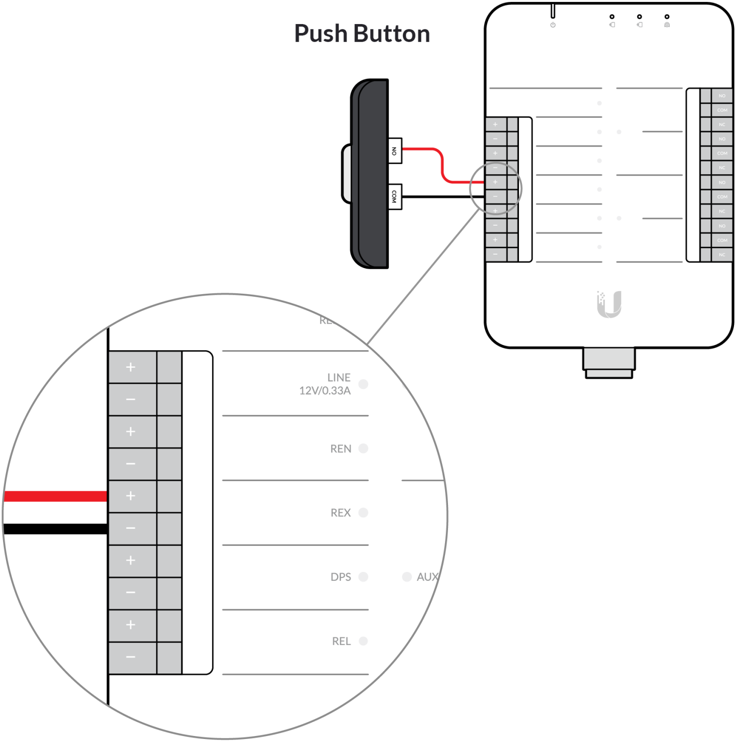
NO
COM
+
−
NO
COM
NC
LINE
12V/0.33A
REN
REX
DPS
AUX
REL

Door Position Switch (Door Sensor)

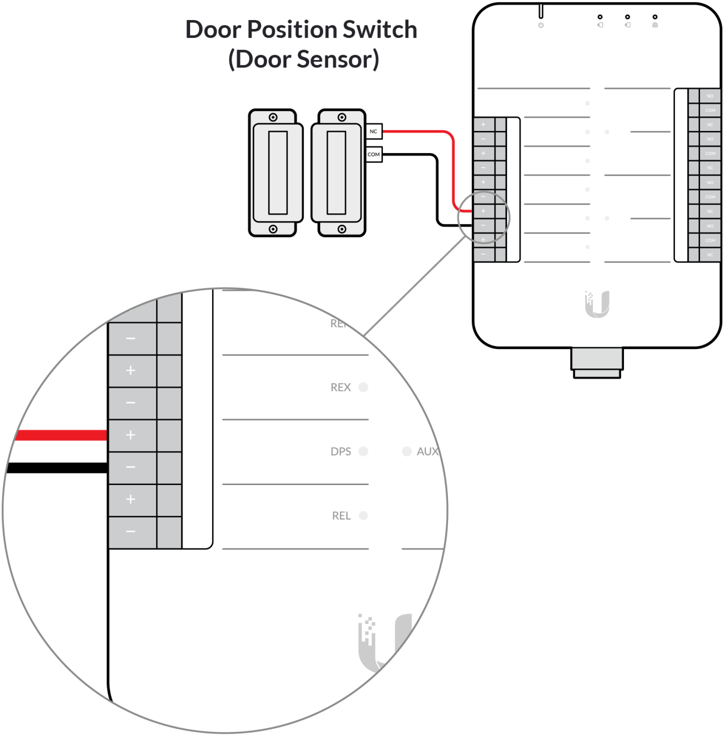
NC
COM
NO
REX
DPS
AUX
REL
+
−

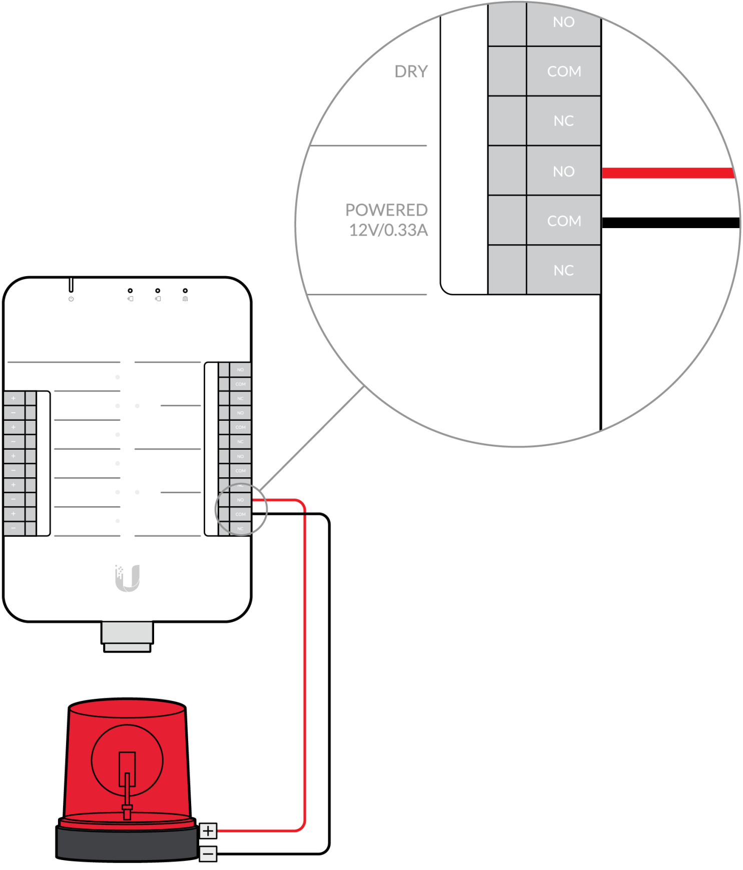
NO
COM
NC
DRY
NO
COM
NC
POWERED
12V/0.33A
+
−

Siren

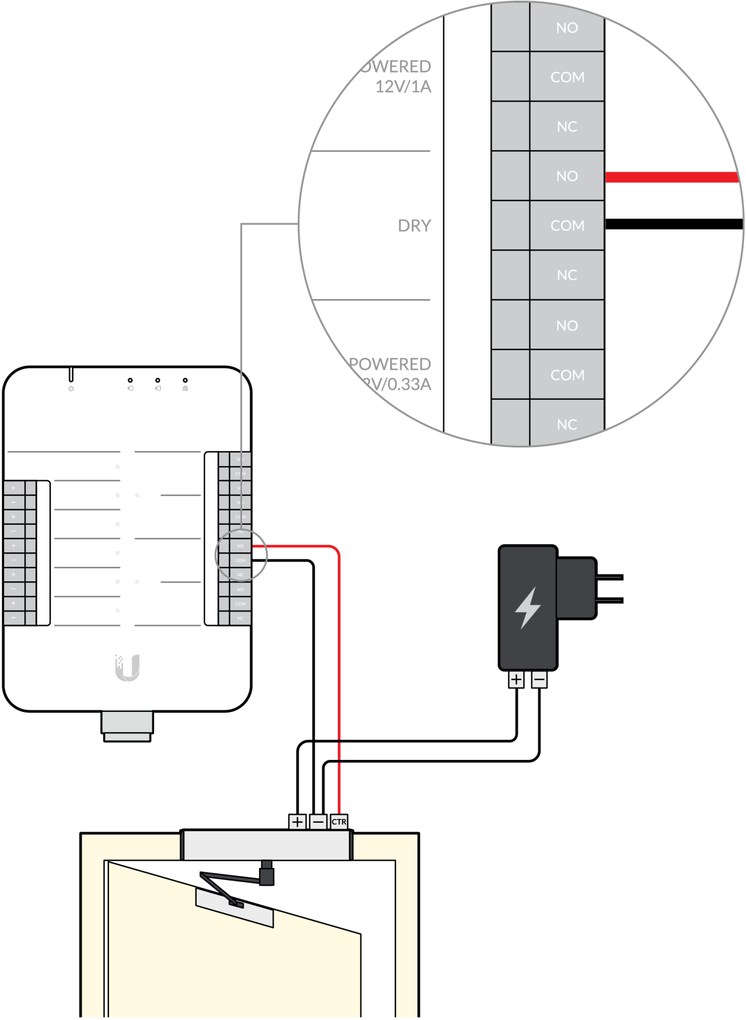
NO
COM
NC
OWERED
12V/1A
NO
DRY
COM
NC
NO
POWERED
2V/0.33A
COM
NC
+
−
+
−
CTR

Door Operator

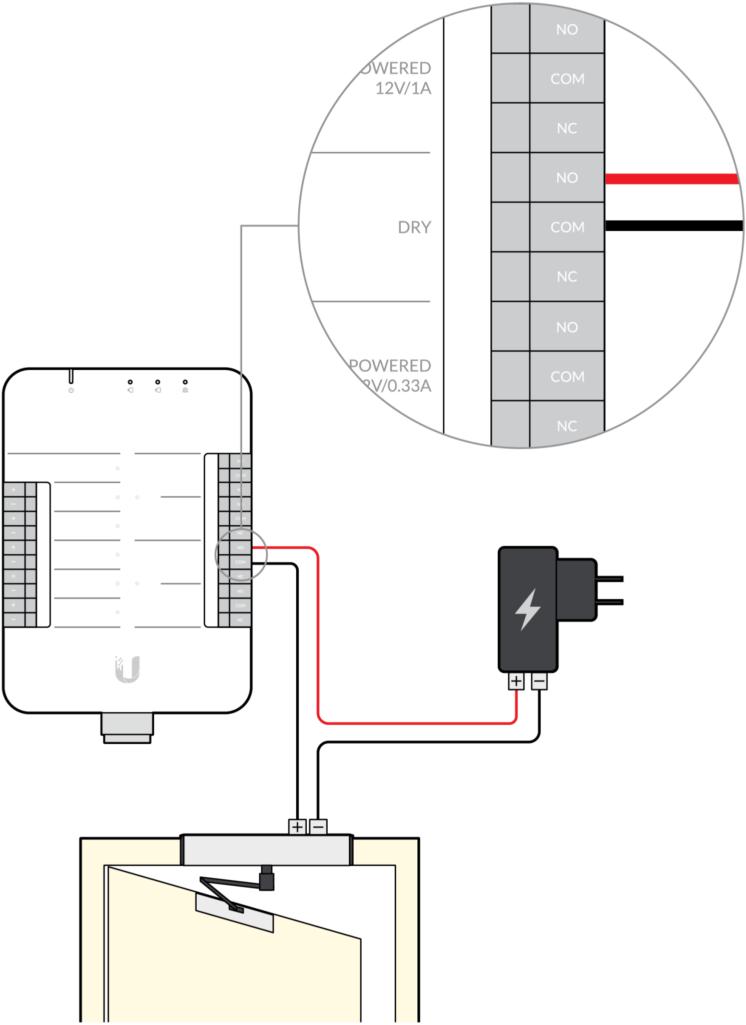
OWERED
12V/1A
DRY
POWERED
2V/0.33A
NO
COM
NC
NO
COM
NC
NO
COM
NC
+
−
+
−

Door Operator

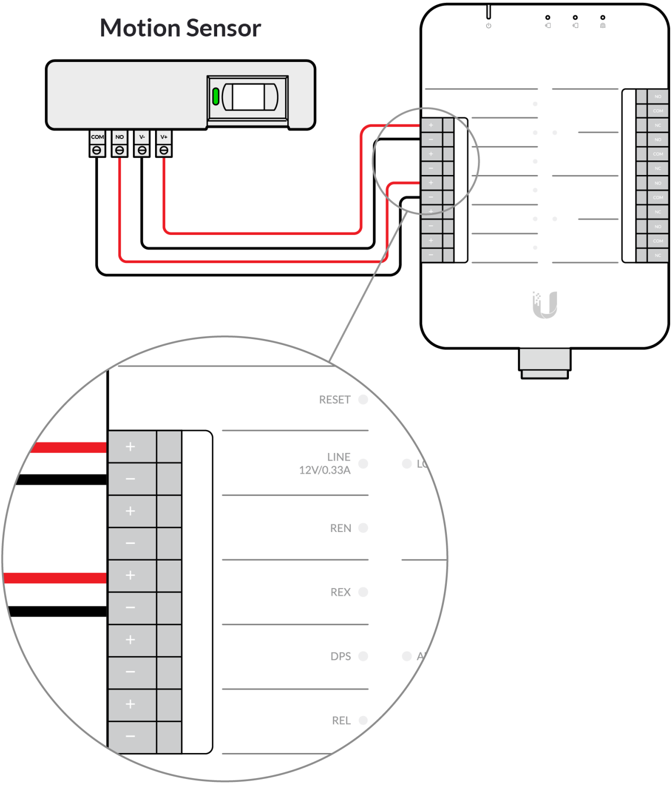
Motion Sensor
COM
NO
V-
V+
NO
COM
NC
NO
COM
NC
NO
COM
NC
NO
COM
NC
RESET
+
−
LINE
12V/0.33A
+
−
REN
+
−
REX
+
−
DPS
+
−
REL

3

ui.com/install

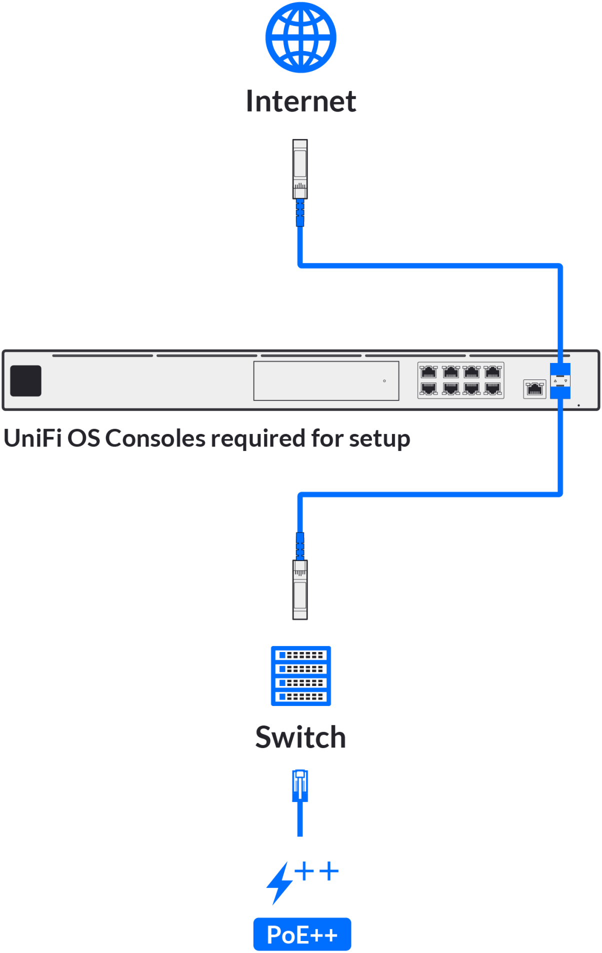

Internet
UniFi OS Consoles required for setup
Switch
PoE++

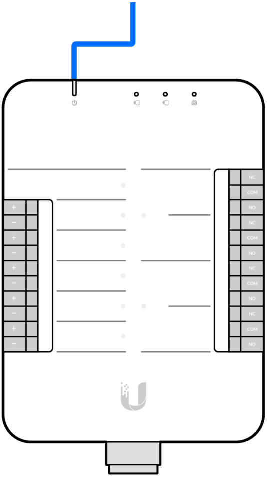
+
−
+
−
+
−
+
−
+
−
NC
COM
NO
NC
COM
NO
NC
COM
NO
NC
COM
NO

4

ui.com/install

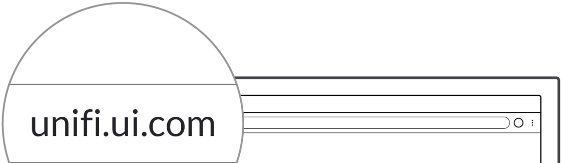
unifi.ui.com

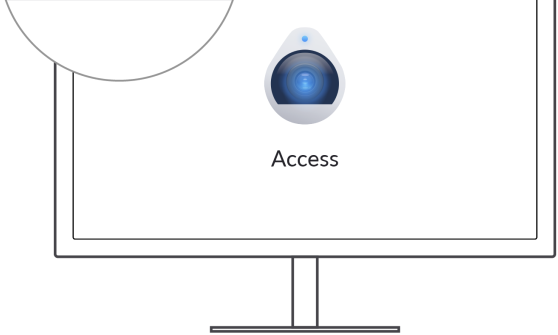

Installation Video

Get Answers
help.ui.com

UI Support

©2019-2020 Ubiquiti Inc. All rights reserved. Ubiquiti, Ubiquiti Networks, the Ubiquiti U logo, UniFi Access, and UniFi are trademarks or registered trademarks of Ubiquiti Inc. in the United States and in other countries. All other trademarks are the property of their respective owners.