■ Contents

Introduction to VLT 2800 4

Software version 4
High voltage warning 5
These rules concern your safety 5
Warning against unintended start 5
Technology 6
CE labelling 8
Motor coils 12
Ordering numbers for VLT 2800 200-240 V 16
Ordering numbers for VLT 2800 380-480V 17
PC Software tools 21
Accessories for the VLT 2800 22
Control unit 29
Manual initialisation 29
Hand Auto 30
Automatic motor tuning 31
The LCP 2 Control unit, option 32
Parameter selection 35

Installation 37

Mechanical dimensions 37
Mechanical installation 41
General information about electrical installation 42
EMC-correct electrical installation 44
Earthing of screened/armoured control cables 46
Diagram 47
Electrical installation 48
Safety clamp 50
Pre-fuses 50
Mains connection 50
Motor connection 51
RFI switch 51
Direction of motor rotation 51
Parallel connection of motors 52
Motor cables 52
Motor thermal protection 53
Brake connection 53
Earth connection 53
Load sharing 54
Tightening Torque, Power Terminals 54
Control of mechanical brake 54
Access to control terminals 54
Electrical installation, control cables 55
Tightening torques, control cables 56
Electrical installation, control terminals 56
Relay connection 56
VLT Software Dialog 56

Connection examples 57
Use of internal PID-controller - closed loop process control 59

Programming 61
Operation & Display 61
Setup configuration 62
Load and Motor 69
DC Braking 74
References & Limits 80
Handling of references 81
Reference function 84
Inputs and outputs 88
Special functions 98
PID functions 101
Handling of feedback 102
Enhanced Sleep Mode 110
Serial communication for VLT 2800 115
Control Word according to FC protocol 119
Status Word according to FC Profile 121
Control word according to Fieldbus Profile 122
Status word according to Profidrive protocol 123
Serial communication 126
Technical functions 134

All about VLT 2800 139
Special conditions 139
Galvanic Isolation (PELV) 139
Earth leakage currentand RCD relays 139
Extreme operating conditions 139
dU/dt on motor 140
Switching on the input 140
Peak voltage on motor 140
Acoustic noise 141
Temperature-dependent switch frequency 142
Derating for air pressure 142
Derating for running at low speed 142
Derating for long motor cables 142
Derating for high switching frequency - VLT 2800 142
Vibration and shock 143
Air humidity 143
UL Standard 143
Efficiency 143
Mains supply interference/harmonics 144
Power factor 144
Generic EMC standards/product standards 145
EMC emission 145
EMC Immunity 146
Harmonic Current Emission 147
Aggressive environments 147

Display readout 149
Warnings/alarm messages 149
Warning words, extended status words and Alarmwords 153
General technical data 154
Technical data, mains supply 1 x 220 - 240 V/3 x 200-240V 159
Technical data, mains supply 3 x 380 - 480 V 160
Available literature 161
Supplied with the unit 161

Index 169

VLT 2800
Design Guide
Software version: 3.1x

This Design Guide can be used for all VLT 2800 Series frequency converters with software version 3.1x.
The software version number can be seen from parameter 640.

NB!
This symbol indicates something that should be noted by the reader.

Indicates a general warning.

This symbol indicates a warning of high voltage.

High voltage warning

The voltage of the frequency converter is dangerous whenever the converter is connected to mains. Incorrect fitting of the motor or frequency converter may cause damage to the equipment, serious injury or death. Consequently, it is essential to comply with the instructions in this manual as well as local and national rules and safety regulations.

The Protective Extra Low Voltage (PELV) requirements stated in IEC 61800-5-1 are not fulfilled at altitudes above 2000 m (6562 ft.). For 200V frequency converters the requirements are not fulfilled at altitudes above 5000 m (16 404 ft.). Please contact Danfoss Drives for further information.

These rules concern your safety

1. The frequency converter must be disconnected from the mains if repair work is to be carried out. Check that the mains supply has been disconnected and that the prescribed time has passed before removing motor and mains plugs.
2. The [STOP/RESET] key on the control panel of the frequency converter does not disconnect the equipment from mains and is thus not to be used as a safety switch.
3. The unit must be properly connected to the earth, the user must be protected against the supply voltage and the motor must be protected against overloading pursuant to prevailing national and local regulations.
4. The earth leakage currents are higher than 3.5 mA.
5. Protection against motor overload is not included in the factory setting. If this function is required, set parameter 128 *Motor thermal protection* to data value *ETR trip* or data value *ETR warning*. For the North American market: The ETR functions provide overload protection of the motor, class 20, in accordance with NEC.
6. Do not remove the plugs for the motor - and mains supply while the frequency converter is connected to mains. Check that the mains supply has been disconnected and that the prescribed time has passed before removing motor and mains plugs.
7. Note that the frequency converter has more voltage inputs than L1, L2 and L3 when the DC bus terminals are used. Check that all voltage inputs are disconnected and that the prescribed time has passed before repair work is commenced.

Warning against unintended start

1. The motor can be brought to a stop by means of digital commands, bus commands, references or a local stop, while the frequency converter is connected to mains. If personal safety considerations make it necessary to ensure that no unintended start occurs, these stop functions are not sufficient.
2. While parameters are being changed, the motor may start. Consequently, the stop key [STOP/RESET] must always be activated, following which data can be modified.
3. A motor that has been stopped may start if faults occur in the electronics of the frequency converter, or if a temporary overload or a fault in the supply mains or the motor connection ceases.

Use on isolated mains

See section *RFI Switch* regarding use on isolated mains.

It is important to follow the recommendations regarding installation on IT-mains, since sufficient protection of the complete installation must be observed. Not taking care using relevant monitoring devices for IT-mains may result in damage.

Technology

Control principle

A frequency converter rectifies AC voltage from the mains supply into DC voltage, following which it changes this voltage to an AC voltage with variable amplitude and frequency.

The motor thus receives a variable voltage and frequency, which enables infinitely variable speed control of three-phase, standard AC motors.

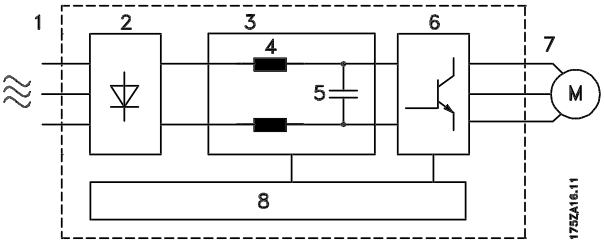

1. Mains voltage
1 x 220 - 240 V AC, 50 / 60 Hz
3 x 200 - 240 V AC, 50 / 60 Hz
3 x 380 - 480 V AC, 50 / 60 Hz

2. Rectifier
Three-phase rectifier bridge which rectifies AC voltage into DC voltage.

3. Intermediate circuit
DC voltage 2 x mains voltage [V].

4. Intermediate circuit coils
Evens out the intermediate circuit current and limits the load on mains and components (mains transformer, cables, fuses and contactors).

5. Intermediate circuit condenser
Evens out the intermediate circuit voltage.

6. Inverter
Converts DC voltage into a variable AC voltage with a variable frequency.

7. Motor voltage
Variable AC voltage depending on supply voltage.
Variable frequency: 0.2 - 132 / 1 - 1000 Hz.

8. Control card
Here is the computer that controls the inverter which generates the pulse pattern by which the DC voltage is converted into variable AC voltage with a variable frequency.

VLT 2800 control principle

A frequency converter is an electronic unit which is able to infinitely variably control the rpm of an AC motor. The frequency converter governs the motor speed by converting the regular voltage and frequency from mains, e.g. 400 V / 50 Hz, into variable magnitudes. Today the frequency converter controlled AC motor is a natural part of all types of automated plants.

The frequency converter has an inverter control system called VVC (Voltage Vector Control). VVC controls an induction motor by energizing with a variable frequency and a voltage suitable for it. If the motor load changes, so do its energizing and speed. That is why the motor current is measured on an ongoing basis, and a motor model is used to calculate the actual voltage requirement and slip of the motor.

Programmable inputs and outputs in four Setups

In the frequency converter is possible to program the different control inputs and signal outputs and to select four different user-defined Setups for most parameters. It is easy for the user to program the required functions on the control panel or via serial communication.

Mains protector

The frequency converter is protected against the transients that occur on the mains sometimes, e.g. if coupling with a phase compensation system, or if fuses blow when lightning strikes.

Rated motor voltage and full torque can be maintained down to approx. 10% undervoltage in the mains supply.

As all 400 V units in the VLT 2800 Series have intermediate circuit coils, there is only a low amount of harmonic mains supply interference. This gives a good power factor (lower peak current), which reduces the load on the mains installation.

Frequency converter protections

The current measurement in the intermediate circuit constitutes perfect protection of the frequency in case there is a short-circuit or an earth fault on the motor connection.

Constant monitoring of the intermediate circuit current enables switching on the motor output, e.g. by means of a contactor.

Efficient monitoring of the mains supply means that the unit will stop in the case of a phase drop-out. In this

way, the inverter and the condensers in the intermediate circuit are not overloaded, which would dramatically reduce the service life of the frequency converter. The frequency converter offers temperature protection as standard. If there is a thermal overload, this function cuts out the inverter.

Reliable galvanic isolation

In the frequency converter all digital inputs/outputs, analogue inputs/outputs and the terminals for serial communication are supplied from or in connection with circuits that comply with PELV requirements. PELV is also complied with in relation to relay terminals, so that they can be connected to the mains potential.
For further information see the section entitled *Galvanic Isolation (PELV)*.

Advanced motor protection

The frequency converter has integral electronic motor protection.
The frequency converter calculates the motor temperature on the basis of current, frequency and time.
As opposed to traditional, bimetallic protection, electronic protection takes account of reduced cooling at low frequencies because of reduced fan speed (motors with internal fan). This function cannot protect the individual motors when motors are connected in parallel. Thermal motor protection can be compared to a protective motor switch, CTI.
To give the motor maximum protection against overheating when it is covered or blocked, or if the fan should fail, you can install a thermistor and connect it to the frequency converter's thermistor input (Digital input), see parameter 128 *Thermal motor protection.*

See also the section entitled *Galvanic Isolation (PELV)* for further information.

NB!
This function cannot protect the individual motors in the case of motors linked in parallel.

CE labelling

What is CE labelling?

The purpose of CE labelling is to avoid technical obstacles to trade within EFTA and the EU. The EU has introduced the CE label as a simple way of showing whether a product complies with the relevant EU directives. The CE label says nothing about the specifications or quality of the product. Frequency converters are regulated by three EU directives:

•The machinery directive (98/37/EEC)

All machines with critical moving parts are covered by the machinery directive, which came into force on 1 January 1995. Since a frequency converter is largely electrical, it does not fall under the machinery directive. However, if a frequency converter is supplied for use in a machine, we provide information on safety aspects relating to the frequency converter. We do this by means of a manufacturer's declaration.

•The low-voltage directive (73/23/EEC)

Frequency converters must be CE labelled in accordance with the low-voltage directive, which came into force on 1 January 1997. The directive applies to all electrical equipment and appliances used in the 50 - 1000 Volt AC and the 75 - 1500 Volt DC voltage ranges. Danfoss CE labels in accordance with the directive and issues a declaration of conformity upon request.

•The EMC directive (89/336/EEC)

EMC is short for electromagnetic compatibility. The presence of electromagnetic compatibility means that the mutual interference between different components/appliances is so small that the functioning of the appliances is not affected.

The EMC directive came into force on 1 January 1996. Danfoss CE labels in accordance with the directive and issues a declaration of conformity upon request. In order that EMC-correct installation can be carried out, this manual gives detailed instructions for installation. In addition, we specify the standards which our different products comply with. We offer the filters that can be seen from the specifications and provide other types of assistance to ensure the optimum EMC result.

In the great majority of cases, the frequency converter is used by professionals of the trade as a complex component forming part of a larger appliance, system or installation. It must be noted that the responsibility for the final EMC properties of the appliance, system or installation rests with the installer.

Order form

This section makes it easier for you to specify and order a VLT 2800.

Choice of frequency converter

The frequency converter must be chosen on the basis of the present motor current at maximum loading of the unit. The frequency converter's rated output current $I_{INV.}$ must be equal to or greater than the required motor current.

Mains voltage

VLT 2800 is available for two mains voltage ranges: 200-240 V and 380-480 V.

Select whether the frequency converter is connected to a mains voltage of:

- 1 x 220 - 240 V single-phase AC voltage
- 3 x 200 - 240 V three-phase AC voltage
- 3 x 380 - 480 V three-phase AC voltage

1 x 220 - 240 Volt mains voltage

Typical shaft output $P_{INV.}$			Max. constant output current $I_{INV.}$	Max. constant output power at 230 V $S_{INV.}$
Type	[kW]	[HP]	[A]	[kVA]
2803	0.37	0.5	2.2	0.9
2805	0.55	0.75	3.2	1.3
2807	0.75	1.0	4.2	1.7
2811	1.1	1.5	6.0	2.4
2815	1.5	2.0	6.8	2.7
2822	2.2	3.0	9.6	3.8
2840	3.7	5.0	16	6.4

3 x 200 - 240 Volt mains voltage

Typical shaft output $P_{INV.}$			Max. constant output current $I_{INV.}$	Max. constant output power at 230 V $S_{INV.}$
Type	[kW]	[HP]	[A]	[kVA]
2803	0.37	0.5	2.2	0.9
2805	0.55	0.75	3.2	1.3
2807	0.75	1.0	4.2	1.7
2811	1.1	1.5	6.0	2.4
2815	1.5	2.0	6.8	2.7
2822	2.2	3.0	9.6	3.8
2840	3.7	5.0	16.0	6.4

3 x 380 - 480 Volt mains voltage

Typical shaft output $P_{INV.}$			Max. constant output current $I_{INV.}$	Max. constant output power at 400 V $S_{INV.}$
Type	[kW]	[HP]	[A]	[kVA]
2805	0.55	0.75	1.7	1.1
2807	0.75	1.0	2.1	1.7
2811	1.1	1.5	3.0	2.0
2815	1.5	2.0	3.7	2.6
2822	2.2	3.0	5.2	3.6
2830	3.0	4.0	7.0	4.8
2840	4.0	5.0	9.1	6.3
2855	5.5	7.5	12.0	8.3
2875	7.5	10.0	16.0	11.1
2880	11	15	24	16.6
2881	15	20	32	22.2
2882	18.5	25	37.5	26.0

Enclosure

All VLT 2800 units are supplied with IP 20 enclosure as standard.
This enclosure level is ideal for panel mounting in areas where a high degree of protection is required; at the same time IP 20 enclosures allow side-by-side installation without any need for extra cooling equipment.
IP 20 units can be upgraded with IP 21 / top cover and/ or NEMA 1 by fitting a terminal cover. See ordering number for terminal cover under *Accessories for VLT 2800* .

In addition, VLT 2880-82 and 2840 PD2 units are supplied with Nema 1 enclosure as standard.

Brake

VLT 2800 is available with or without an integral brake module. See also the section entitled *Brake resistors* for ordering a Brake resistor.

RFI filter

VLT 2800 is available with or without an integral 1A RFI-filter. The integral 1A RFI filter complies with EMC standards EN 55011-1A.

With an integral RFI filter there is compliance with EN 55011-1B with a max. 15-metre screened/armoured motor cable on VLT 2803-2815 1 x 220-240 Volt.
VLT 2880-82 with integral 1B filter comply with EMC standard EN 50011 - 1B

Harmonic filter

The harmonic currents do not affect power consumption directly, but they increase the heat losses in the installation (transformer, cables). That is why, in a system with a relatively high percentage of rectifier load, it is important to keep the harmonic currents at a low level so as to avoid a transformer overload and high cable temperature. For the purpose of ensuring low harmonic currents, VLT 2822-2840 3 x 200-240 V and VLT 2805-2882 380-480 V are fitted with coils in their intermediate circuit as standard. This reduces the input current I_{RMS} by typically 40 %.
Please note that 1 x 220-240 V units up to 1.5 kW are not supplied with coils in their intermediate circuit.

Control unit

The frequency converter is always supplied with an integral control unit.
All displays are in the form of a six-digit LED display capable of showing one item of operating data continuously during normal operation. As a supplement to the display, there are three indicator lamps for voltage (ON), warning (WARNING) and alarm (ALARM). Most of the frequency converter's parameter Setups can be changed immediately via the integral control panel.

An LCP 2 control panel to be connected via a plug to the front of the frequency converter is available as an option. The LCP 2 control panel can be installed up to 3 metres away from the frequency converter, e.g. on a front panel, by means of the accompanying mounting kit.
All displays of data are via a 4-line alpha-numerical display, which in normal operation is able to show 4 operating data items and 3 operation modes continuously. During programming, all the information required for quick, efficient parameter Setup of the frequency converter is displayed. As a supplement to the display, there are three indicator lamps for voltage (ON), warning (WARNING) and alarm (ALARM). Most of the frequency converter's parameter Setups can be changed immediately via the LCP 2 control panel. See also the section entitled *The LCP 2 control unit* in the Design Guide.

FC protocol

Danfoss frequency converters are able to fulfill many different functions in a monitoring SYSTEM. The frequency converter can be integrated directly in an overall surveillance SYSTEM, which will allow detailed process data to be transferred via serial communication.
The protocol standard is based on an RS 485 bus SYSTEM with a maximum transmission speed of 9600 baud. The following Drive profiles are supported as standard:

- FC Drive, which is a profile adapted to Danfoss.
- Profidrive, which supports the profidrive profile.

See *Serial communication* for further details of telegram structure and Drive profile.

Fieldbus option

The increasing information requirements in industry make it necessary to collect or visualize many different process data. Important process data help the system technician with the daily monitoring of the system. The large amounts of data involved in major systems make a higher transmission speed than 9600 baud desirable.
Fieldbus option

Profibus
Profibus is a fieldbus system, which can be used for linking automation devices such as sensors and actuators with the controls by means of a two-conductor cable. Profibus DP is a very fast communication protocol, made specially for communication between the automation system and various types of equipment.
Profibus is a registered trade mark.

DeviceNet
DeviceNet fieldbus systems can be used for linking automation devices such as sensors and actuators with the controls by means of a four-wire conductor cable.
DeviceNet is a medium speed communication protocol, made specially for communication between the automation system and various types of equipment.
Units with DeviceNet protocol cannot be controlled by FC protocol and Profidrive protocol.

VLT Software Dialog can be used on the Sub D plug.

Motor coils

By fitting the motor coil module between the frequency converter and the motor it is possible to use up to 200 metres of unscreened/unarmoured motor cable or 100 metres of screened/armoured motor cable. The motor coil module has an enclosure of IP 20 and can be installed side-by-side.

NB!
To have long motor cables and still comply with EN55011-1A, motor coil and *EMC filter for long motor cables* are needed.

NB!
To comply with EN55011-1A *the EMC filter for long motor cables* can only be fitted to a VLT 2800 with integral 1A filter (R1 option).
See also the section EMC Emission.

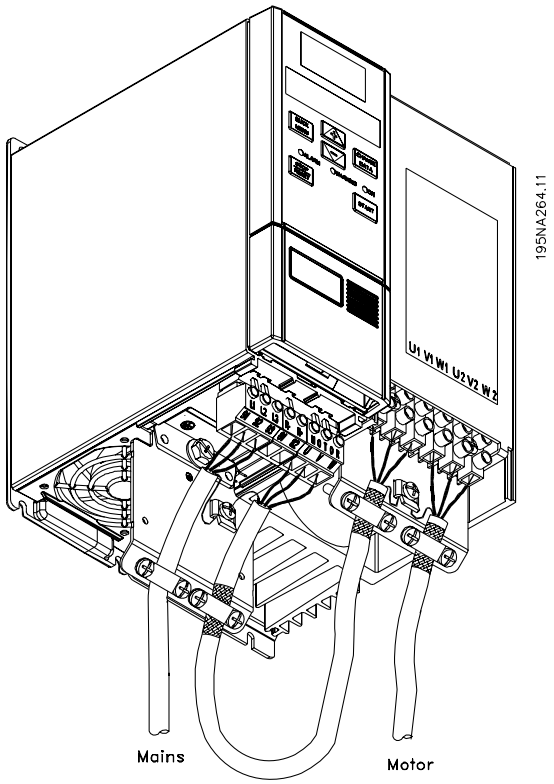

Technical data for VLT 2803-2875 Motor coils	
Max. cable length (unscreened/unarmoured) [1]	200 m
Max. cable length (screened/armoured) [1]	100 m
Enclosure	IP 20
Max. rated current [1]	16 A
Max. voltage[1]	480 V AC
Min. distance between VLT and motor coil	Side-by-side
Min. distance above and below motor coil	100 mm
Mounting	Vertical mounting only
Dimensions H x W x D (mm)[2]	200 x 90 x 152
Weight	3.8 kg

[1] Parameter 411 *Switching frequency* = 4500 Hz. [2] For mechanical dimensions see under *Mechanical dimensions*.
See ordering number for motor coil module under *Accessories for VLT 2800*.

RFI 1B filter

All frequency converters will cause electromagnetic noise in the mains supply when they are operating. An RFI (Radio Frequency Interference) filter will reduce the electromagnetic noise in the mains supply.
Without an RFI filter there is a risk that a frequency converter will disrupt other electrical components that are connected to the mains and might thus cause operating disruption.

By fitting an RFI 1B filter module between the mains supply and the VLT 2800, the VLT 2800 complies with the EMC norm EN 55011-1B.

NB!
To comply with EN 55011-1B the RFI 1B filter module must be fitted together with a VLT 2800 with integral 1A RFI filter.

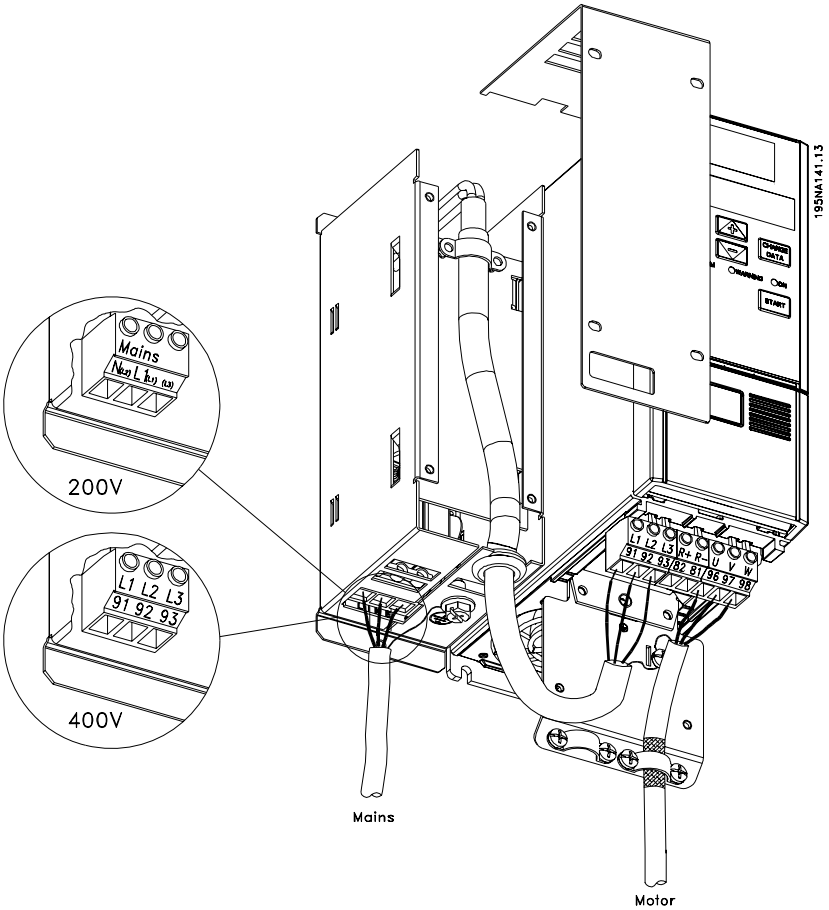

Technical data for VLT 2803–2875 RFI 1B filter	
Max. cable length (screened/armoured) 200-240 V	100 m (At 1A: 100 m)
Max. cable length (screened/armoured) 380-480 V	25 m (At 1A: 50 m)
Enclosure	IP 20
Max. rated current	16 A
Max. Voltage	480 V AC
Max. voltage to earth	300 V AC
Min. distance between VLT and RFI 1B filter	Side-by-Side
Min. distance above and below RFI 1B filter	100 mm
Mounting	Vertical mounting only
Dimensions H x W x D (mm)	200 x 60 x 87
Weight	0.9 kg

See ordering number for RFI 1B filter module under *Accessories for VLT 2800*.

■ RFI 1B/LC filter

The RFI 1B/LC filter contains both an RFI module that complies with EN 55011-1B and an LC filter that reduces the acoustic noise.

LC filter

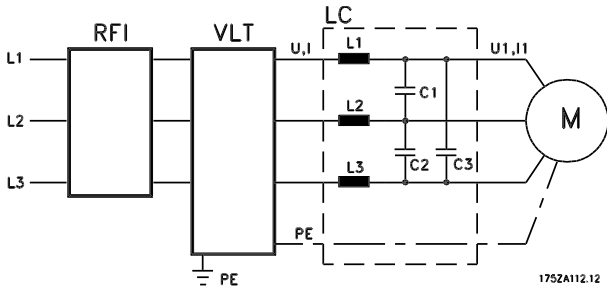

When a motor is controlled by a frequency converter, at times you will be able to hear the acoustic noise from the motor. The noise, which is caused by the design of the motor, is generated every time one of the inverter contacts in the frequency converter is activated. The frequency of the acoustic noise therefore corresponds to the frequency converter's connection frequency.

The filter reduces the voltage's du/dt, the peak voltage U_{peak} and ripple current ΔI to the motor, so that the current and voltage are almost sine-shaped. The acoustic motor noise is thus reduced to a minimum.

Because of the ripple current in the coils some noise will be emitted by the coils. This problem can be solved completely by fitting the filter inside a cabinet or equivalent.

Danfoss can supply an LC filter for the VLT series 2800, which muffles the acoustic motor noise . Before the filters are put into use you must ensure that:

- rated current is observed
- mains voltage is 200-480 V
- parameter 412 *Variable switching frequency* is set to *LC filter attached* [3]
- output frequency is max. 120 Hz

See drawing on the next page.

Installation of thermistor (PTC)

The RFI 1B/LC filter has an integral thermistor (PTC), which is activated if an overtemperature arises. The frequency converter can be programmed to stop the motor and activatee an alarm via a relay output or a digital output if the thermistor is activated.

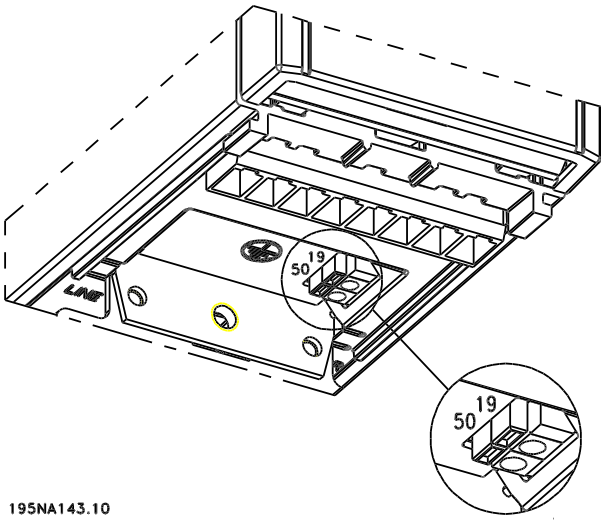

The thermistor must be connected between terminal 50 (+10V) and one of the digital inputs 18, 19, 27 and 29.

In parameter 128 *Motor thermal protection*, *Thermistor warning* [1] or *Thermistor trip* [2] are selected

The thermistor is connected as follows:

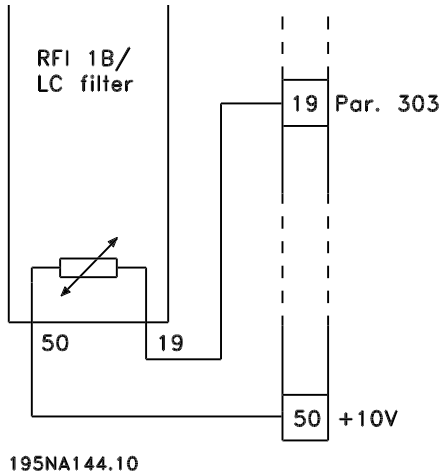

■ RFI 1B/LC filter

NB!
To comply with EN 55011-1B the RFI 1B filter module must be fitted to a VLT 2800 with integral 1A RFI filter.

NB!
The 1B/LC filter is not suitable for 200 V devices due to the high 1Ø input current.

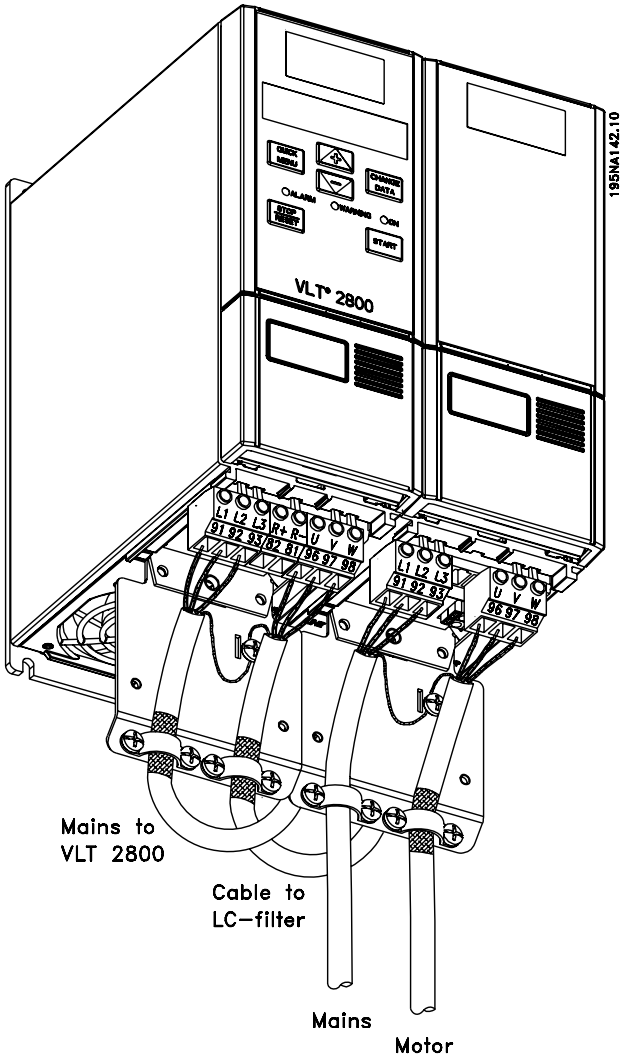

Technical data for VLT 2803–2875 RFI 1B/LC filter	
Max. cable length (screened/armoured) 380-480 V	25 m (At 1A: 50 m)
Enclosure	IP 20
Max. rated current	4.0 (Order no.: 195N3100); 9.1 (Order no.: 195N3101)
Max. voltage	480 V AC
Max. voltage to earth	300 V AC
Min. distance between VLT and RFI 1B/LC filter	Side-by-Side
Min. distance above and below RFI 1B/LC filter	100 mm
Mounting	Vertical mounting only
Dimensions 195N3100 4.0 A H x W x D (mm)	200 x 75 x 168
Dimensions 195N3101 9.1 A H x W x D (mm)	267.5 x 90 x 168
Weight 195N3100 4.0 A	2.4 kg
Weight 195N3101 9.1 A	4.0 kg

Ordering numbers for VLT 2800 200-240 V

0,37 kW		VLT 2803 1 x 220-240 V / 3 x 200-240 V		
RFI	Unit	Profibus DP[1)] 3 MBits/s	DeviceNet	Ordering no.
-	ST	-	-	195N0001
-	SB	-	-	195N0002
R1	ST	-	-	195N0003
R1	SB	-	-	195N0004
-	ST	✓	-	195N0005
-	SB	✓	-	195N0006
R1	ST	✓	-	195N0007
R1	SB	✓	-	195N0008
-	ST	-	✓	195N0009
-	SB	-	✓	195N0010
R1	ST	-	✓	195N0011
R1	SB	-	✓	195N0012

0,55 kW		VLT 2805 1 x 220-240 V / 3 x 200-240 V		
RFI	Unit	Profibus DP[1)] 3 MBits/s	DeviceNet	Ordering no.
-	ST	-	-	195N0013
-	SB	-	-	195N0014
R1	ST	-	-	195N0015
R1	SB	-	-	195N0016
-	ST	✓	-	195N0017
-	SB	✓	-	195N0018
R1	ST	✓	-	195N0019
R1	SB	✓	-	195N0020
-	ST	-	✓	195N0021
-	SB	-	✓	195N0022
R1	ST	-	✓	195N0023
R1	SB	-	✓	195N0024

0,75 kW		VLT 2807 1 x 220-240 V / 3 x 200-240 V		
RFI	Unit	Profibus DP[1)] 3 MBits/s	DeviceNet	Ordering no.
-	ST	-	-	195N0025
-	SB	-	-	195N0026
R1	ST	-	-	195N0027
R1	SB	-	-	195N0028
-	ST	✓	-	195N0029
-	SB	✓	-	195N0030
R1	ST	✓	-	195N0031
R1	SB	✓	-	195N0032
-	ST	-	✓	195N0033
-	SB	-	✓	195N0034
R1	ST	-	✓	195N0035
R1	SB	-	✓	195N0036

1,1 kW		VLT 2811 1 x 220-240 V / 3 x 200-240 V		
RFI	Unit	Profibus DP[1)] 3 MBits/s	DeviceNet	Ordering no.
-	ST	-	-	195N0037
-	SB	-	-	195N0038
R1	ST	-	-	195N0039
R1	SB	-	-	195N0040
-	ST	✓	-	195N0041
-	SB	✓	-	195N0042
R1	ST	✓	-	195N0043
R1	SB	✓	-	195N0044
-	ST	-	✓	195N0045
-	SB	-	✓	195N0046
R1	ST	-	✓	195N0047
R1	SB	-	✓	195N0048

1,5 kW		VLT 2815 1 x 220-240 V / 3 x 200-240 V		
RFI	Unit	Profibus DP[1)] 3 MBits/s	DeviceNet	Ordering no.
-	ST	-	-	195N0049
-	SB	-	-	195N0050
R1	ST	-	-	195N0051
R1	SB	-	-	195N0052
-	ST	✓	-	195N0053
-	SB	✓	-	195N0054
R1	ST	✓	-	195N0055
R1	SB	✓	-	195N0056
-	ST	-	✓	195N0057
-	SB	-	✓	195N0058
R1	ST	-	✓	195N0059
R1	SB	-	✓	195N0060

2,2 kW		VLT 2822 PD2 1 x 220-240 V / 3 x 200-240 V		
RFI	Unit	Profibus DP[1)] 3 MBits/s	DeviceNet	Ordering no.
-	ST	-	-	178F5167
-	ST	✓	-	178F5168
-	ST	-	✓	178F5169

2,2 kW		VLT 2822 3 x 200-240 V		
RFI	Unit	Profibus DP[1)] 3 MBits/s	DeviceNet	Ordering no.
-	ST	-	-	195N0061
-	SB	-	-	195N0062
R1	ST	-	-	195N0063
R1	SB	-	-	195N0064
-	ST	✓	-	195N0065
-	SB	✓	-	195N0066
R1	ST	✓	-	195N0067
R1	SB	✓	-	195N0068
-	ST	-	✓	195N0069
-	SB	-	✓	195N0070
R1	ST	-	✓	195N0071
R1	SB	-	✓	195N0072

3,7 kW		VLT 2840 PD2 1 x 220-240 V / 3 x 200-240 V		
RFI	Unit	Profibus DP[1)] 3 MBits/s	DeviceNet	Ordering no.
-	ST	-	-	178F5170
-	ST	✓	-	178F5171
-	ST	-	✓	178F5172

3,7 kW		VLT 2840 3 x 200-240 V		
RFI	Unit	Profibus DP[1)] 3 MBits/s	DeviceNet	Ordering no.
-	ST	-	-	195N0073
-	SB	-	-	195N0074
R1	ST	-	-	195N0075
R1	SB	-	-	195N0076
-	ST	✓	-	195N0077
-	SB	✓	-	195N0078
R1	ST	✓	-	195N0079
R1	SB	✓	-	195N0080
-	ST	-	✓	195N0081
-	SB	-	✓	195N0082
R1	ST	-	✓	195N0083
R1	SB	-	✓	195N0084

ST: Standard unit.

SB: Standard unit with integral brake.

R1: With RFI filter that complies with EN 55011-1A.

NB!

For VLT 2803-2815 with an R1 filter it is only possible to connect single-phase mains voltage 1 x 220 - 240 Volt.

1) Also available in 12 MBit/s version.

■ Ordering numbers for VLT 2800 380-480V

0,55 kW		VLT 2805 3 x 380-480 V		
RFI	Unit	Profibus DP[1)] 3 MBit/s	DeviceNet	Ordering no.
-	ST	-	-	195N1001
-	SB	-	-	195N1002
R1	ST	-	-	195N1003
R1	SB	-	-	195N1004
-	ST	✓	-	195N1005
-	SB	✓	-	195N1006
R1	ST	✓	-	195N1007
R1	SB	✓	-	195N1008
-	ST	-	✓	195N1009
-	SB	-	✓	195N1010
R1	ST	-	✓	195N1011
R1	SB	-	✓	195N1012

0,75 kW		VLT 2807 3 x 380-480 V		
RFI	Unit	Profibus DP[1)] 3 MBit/s	DeviceNet	Ordering no.
-	ST	-	-	195N1013
-	SB	-	-	195N1014
R1	ST	-	-	195N1015
R1	SB	-	-	195N1016
-	ST	✓	-	195N1017
-	SB	✓	-	195N1018
R1	ST	✓	-	195N1019
R1	SB	✓	-	195N1020
-	ST	-	✓	195N1021
-	SB	-	✓	195N1022
R1	ST	-	✓	195N1023
R1	SB	-	✓	195N1024

1,1 kW		VLT 2811 3 x 380-480 V		
RFI	Unit	Profibus DP[1)] 3 MBit/s	DeviceNet	Ordering no.
-	ST	-	-	195N1025
-	SB	-	-	195N1026
R1	ST	-	-	195N1027
R1	SB	-	-	195N1028
-	ST	✓	-	195N1029
-	SB	✓	-	195N1030
R1	ST	✓	-	195N1031
R1	SB	✓	-	195N1032
-	ST	-	✓	195N1033
-	SB	-	✓	195N1034
R1	ST	-	✓	195N1035
R1	SB	-	✓	195N1036

1,5 kW		VLT 2815 3 x 380-480 V		
RFI	Unit	Profibus DP[1)] 3 MBit/s	DeviceNet	Ordering no.
-	ST	-	-	195N1037
-	SB	-	-	195N1038
R1	ST	-	-	195N1039
R1	SB	-	-	195N1040
-	ST	✓	-	195N1041
-	SB	✓	-	195N1042
R1	ST	✓	-	195N1043
R1	SB	✓	-	195N1044
-	ST	-	✓	195N1045
-	SB	-	✓	195N1046
R1	ST	-	✓	195N1047
R1	SB	-	✓	195N1048

2,2 kW		VLT 2822 3 x 380-480 V		
RFI	Unit	Profibus DP[1)] 3 MBit/s	DeviceNet	Ordering no.
-	ST	-	-	195N1049
-	SB	-	-	195N1050
R1	ST	-	-	195N1051
R1	SB	-	-	195N1052
-	ST	✓	-	195N1053
-	SB	✓	-	195N1054
R1	ST	✓	-	195N1055
R1	SB	✓	-	195N1056
-	ST	-	✓	195N1057
-	SB	-	✓	195N1058
R1	ST	-	✓	195N1059
R1	SB	-	✓	195N1060

3,0 kW		VLT 2830 3 x 380-480 V		
RFI	Unit	Profibus DP[1)] 3 MBit/s	DeviceNet	Ordering no.
-	ST	-	-	195N1061
-	SB	-	-	195N1062
R1	ST	-	-	195N1063
R1	SB	-	-	195N1064
-	ST	✓	-	195N1065
-	SB	✓	-	195N1066
R1	ST	✓	-	195N1067
R1	SB	✓	-	195N1068
-	ST	-	✓	195N1069
-	SB	-	✓	195N1070
R1	ST	-	✓	195N1071
R1	SB	-	✓	195N1072

4,0 kW		VLT 2840 3 x 380-480 V		
RFI	Unit	Profibus DP[1)] 3 MBit/s	DeviceNet	Ordering no.
-	ST	-	-	195N1073
-	SB	-	-	195N1074
R1	ST	-	-	195N1075
R1	SB	-	-	195N1076
-	ST	✓	-	195N1077
-	SB	✓	-	195N1078
R1	ST	✓	-	195N1079
R1	SB	✓	-	195N1080
-	ST	-	✓	195N1081
-	SB	-	✓	195N1082
R1	ST	-	✓	195N1083
R1	SB	-	✓	195N1084

5,5 kW		VLT 2855 3 x 380-480 V		
RFI	Unit	Profibus DP[1)] 3 MBit/s	DeviceNet	Ordering no.
-	ST	-	-	195N1085
-	SB	-	-	195N1086
R1	ST	-	-	195N1087
R1	SB	-	-	195N1088
-	ST	✓	-	195N1089
-	SB	✓	-	195N1090
R1	ST	✓	-	195N1091
R1	SB	✓	-	195N1092
-	ST	-	✓	195N1093
-	SB	-	✓	195N1094
R1	ST	-	✓	195N1095
R1	SB	-	✓	195N1096

7,5 kW		VLT 2875 3 x 380-480 V		
RFI	Unit	Profibus DP[1)] 3 MBit/s	DeviceNet	Ordering no.
-	ST	-	-	195N1097
-	SB	-	-	195N1098
R1	ST	-	-	195N1099
R1	SB	-	-	195N1100
-	ST	✓	-	195N1101
-	SB	✓	-	195N1102
R1	ST	✓	-	195N1103
R1	SB	✓	-	195N1104
-	ST	-	✓	195N1105
-	SB	-	✓	195N1106
R1	ST	-	✓	195N1107
R1	SB	-	✓	195N1108

11 kW		VLT 2880 3 x 380-480 V		
RFI	Unit	Profibus DP[1)] 3 MBit/s	DeviceNet	Ordering no.
-	ST	-	-	195N1109
-	SB	-	-	195N1110
R3	ST	-	-	195N1111
R3	SB	-	-	195N1112
-	ST	✓	-	195N1113
-	SB	✓	-	195N1114
R3	ST	✓	-	195N1115
R3	SB	✓	-	195N1116
-	ST	-	✓	195N1117
-	SB	-	✓	195N1118
R3	ST	-	✓	195N1119
R3	SB	-	✓	195N1120

15 kW		VLT 2881 3 x 380-480 V		
RFI	Unit	Profibus DP[1)] 3 MBit/s	DeviceNet	Ordering no.
-	ST	-	-	195N1121
-	SB	-	-	195N1122
R3	ST	-	-	195N1123
R3	SB	-	-	195N1124
-	ST	✓	-	195N1125
-	SB	✓	-	195N1126
R3	ST	✓	-	195N1127
R3	SB	✓	-	195N1128
-	ST	-	✓	195N1129
-	SB	-	✓	195N1130
R3	ST	-	✓	195N1131
R3	SB	-	✓	195N1132

18.5 kW		VLT 2882 3 x 380-480 V		
RFI	Unit	Profibus DP[1)] 3 MBit/s	DeviceNet	Ordering no.
-	ST	-	-	195N1133
-	SB	-	-	195N1134
R3	ST	-	-	195N1135
R3	SB	-	-	195N1136
-	ST	✓	-	195N1137
-	SB	✓	-	195N1138
R3	ST	✓	-	195N1139
R3	SB	✓	-	195N1140
-	ST	-	✓	195N1141
-	SB	-	✓	195N1142
R3	ST	-	✓	195N1143
R3	SB	-	✓	195N1144

ST: Standard unit.
SB: Standard unit with integral brake.
R1: With RFI filter that complies with EN 55011-1A.
R3: With RFI filter that complies with EN 55011-1B.
1) Also available in 12 MBit/s.

VLT 2 8 - P - - B 2 0 - S - R - D B - F

Power Sizes
e.g. 2815

Application range
Process — P

Mains voltage

1x220–240 V	S2	1)
1x220–240 V 3x200–240 V	D2	2)
3x200–240 V	T2	
3x380–480 V	T4	

2803 0.37 KW
2805 0.55 KW
2807 0.75 KW
2811 1.1 KW
2815 1.5 KW
2822 2.2 KW 5)
2840 3.7 KW 6)

2822 2.2 KW
2840 3.7 KW

2805 0.55 KW
2807 0.75 KW
2811 1.1 KW
2815 1.5 KW
2822 2.2 KW
2830 3.0 KW
2840 4.0 KW
2855 5.5 KW
2875 7.5 KW
2880 11.0 KW
2881 15.0 KW
2882 18.5 KW

Enclosure
IP 20 — B20

Hardware variant
Standard — ST
Standard with brake — SB

RFI–filter
Without filter — R0
With integral 1A filter (2803–2875) — R1
With integral 1B filter (2880–2882) — R3
With integral 1A filter For RCD use — R4 3)
With integral 1A filter For IT mains (2805–2840) — R5 4)

Display unit
With built–in display unit — DB
LCP display unit is an option
Code no.: 175N0131
Cable for LCP – Code no.: 175Z0929

Fieldbus
Without fieldbus — F00
With Profibus DP 3 MBit/s — F10
With Profibus DP 12 MBit/s — F12
With DeviceNet — F30

No. unit of this type

Required delivery date

Ordered by:

Date:

Please take a copy of the ordering form.
Fill it in and send or fax your order
to the nearest Danfoss rep. office.

1) S2 = Unit can only be ordered with RFI filter
2) D2 = Unit cannot be ordered with RFI filter
3) = Unit can only be ordered with S2
4) = Unit can only be ordered with T4
5) = Only available in 2822PD2 STR0 version
6) = Only available in 2840PD2 STR0 version

195NA026.22

■ PC Software tools

PC Software - MCT 10

All drives are equipped with a serial communication port. We provide a PC tool for communication between PC and frequency converter, VLT Motion Control Tool MCT 10 Set-up Software.

MCT 10 Set-up Software

MCT 10 has been designed as an easy to use interactive tool for setting parameters in our frequency converters.

The MCT 10 Set-up Software will be useful for:

- Planning a communication network off-line. MCT 10 contains a complete frequency converter database
- Commissioning frequency converters on line
- Saving settings for all frequency converters
- Replacing a drive in a network
- Expanding an existing network
- Future developed drives will be supported

MCT 10 Set-up Software support Profibus DP-V1 via a Master class 2 connection. It makes it possible to on line read/write parameters in a frequency converter via the Profibus network. This will eliminate the need for an extra communication network.

The MCT 10 Set-up Software Modules

The following modules are included in the software package:

MCT 10 Set-up Software
Setting parameters
Copy to and from frequency converters
Documentation and print out of parameter settings incl. diagrams

SyncPos
Creating SyncPos programme

Ordering number:

Please order your CD containing MCT 10 Set-up Software using code number 130B1000.

MCT 31

The MCT 31 harmonic calculation PC tool enables easy estimation of the harmonic distortion in a given application. Both the harmonic distortion of Danfoss frequency converters as well as non-Danfoss frequency converters with different additional harmonic reduction measurements, such as Danfoss AHF filters and 12-18-pulse rectifiers, can be calculated.

Ordering number:

Please order your CD containing the MCT 31 PC tool using code number 130B1031.

Accessories for the VLT 2800

Type	Description	Ordering no.
Motor coil	The motor coil module can be used for VLT 2803-2875	195N3110
RFI 1B filter	The RFI 1B filter module can be used for VLT 2803-2875	195N3103
RFI 1B/LC filter 4 A	The RFI 1B/LC filter 4 A can be used for VLT 2803-2805 200-240 V and VLT 2805-2815 380-400 V	195N3100
RFI 1B/LC filter 9.1 A	RFI 1B/LC filter 9.1 A can be used for VLT 2807-2815 200-240 V and VLT 2822-2840 380-400 V	195N3101
EMC filter	EMC filter for long motor cables can be used for VLT 2805-2815 380-480 V	192H4719
EMC filter	EMC filter for long motor cables can be used for VLT 2822-2840 380-480 V	192H4720
EMC filter	EMC filter for long motor cables can be used for VLT 2855-2875 380-480 V	192H4893
NEMA 1 terminal cover	VLT 2803-2815 200-240 V, VLT 2805-2815 380-480 V	195N1900
NEMA 1 terminal cover	VLT 2822 200-240 V, VLT 2822-2840 380-480 V	195N1901
NEMA 1 terminal cover	VLT 2840, VLT 2840 PD2 200-240 V, VLT 2855-2875 380-480 V	195N1902
IP 21 top cover	VLT 2803-2815 200-240 V, VLT 2805-2815 380-480 V	195N2179
IP 21 top cover	VLT 2822 200-240 V, VLT 2822-2840 380-480 V	195N2180
IP 21 top cover	VLT 2840 200-240 V, VLT 2822 PD2, VLT 2855-2875 380-480 V	195N2181
IP 21 top cover	VLT 2880-2882 380-480 V, VLT 2840 PD2	195N2182
LCP 2 control unit	LCP 2 for programming the frequency converter	175N0131
Cable for LCP 2 control unit	Cable from LCP 2 to frequency converter	175Z0929
DeviceNet cable	Cable for DeviceNet connection	195N3113
LCP 2 remote-mounting kit	Kit for remote-mounting of LCP 2 (incl. 3 m cable, excl. LCP 2)	175Z0850
LOP (Local Operation Pad)	LOP can be used for setting the reference and start/stop via the control terminals.	175N0128
VLT Software Dialog	CD-ROM version[1]	175Z0967
MCT 10	Set-up Software	130B1000
External heat sink, small[2]	W x H x D = 222 x 450 x 65mm[3]	195N3111
External heat sink, large[2]	W x H x D = 288 x 450 x 71mm[3]	195N3112

[1)] Incl. the modules Basis, Logging, Template, Guided Tour in 6 languages (Danish, English, German, Italian, Spanish and French). [2)] For further information see VLT 2800 Cold Plate Instruction MI.28.DX.02.

Dynamic braking

With the VLT 2800 the dynamic braking quality in an application can be improved in two ways, either with the aid of brake resistors or AC braking.

Danfoss offers a complete range of brake resistors for all VLT 2800 frequency converters.
It is the job of the *brake resistor* to apply a load to the intermediate circuit during braking, thereby ensuring that the brake power can be absorbed by the brake resistor.
Without a brake resistor, the intermediate circuit voltage of the frequency converter would go on rising, until cutting out for protection. The advantage of using a brake resistor is that you can brake quickly with large loads, e.g. on a conveyor belt.

Danfoss has chosen a solution in which the brake resistor is not integrated into the frequency converter. This gives the user the following advantages:

- The resistor's cycle time can be selected as required.
- The heat generated during braking can be diverted outside the panel cabinet, where the energy can possibly be utilised.
- No overheating of the electronic components, even if the brake resistor is overloaded.

AC braking is an integrated function that is used for applications in which there is a need for limited dynamic braking. The AC braking function makes it possible to reduce the brake power in the motor instead of in a brake resistor. The function is intended for applications where the required braking torque is less than 50% of rated torque. AC braking is selected in par. 400 *Brake function*.

NB!
The AC brake cannot be used if the required braking torque is more than 50% of rated braking torque. In such instances a brake resistor must be used.

Brake Setup

The figure shows a brake Setup with a frequency converter.
In the following paragraphs, expressions and acronyms are used about brake Setups that can be seen from the figure.

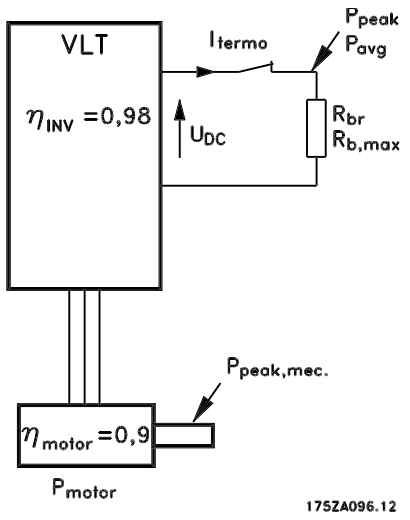

Calculation of brake resistance

The following example and formula only apply to VLT 2800 Series.
To ensure that the frequency converter does not cut out for safety reasons when the motor brakes, the resistance value is selected on the basis of the peak braking effect and the intermediate circuit voltage:

$$R_{br} = \frac{U_{DC^2}}{P_{PEAK}} \ [\Omega]$$

It can be seen that the brake resistance depends on the intermediate circuit voltage (UDC).
With frequency converters that have a mains voltage of 3 x 380 - 480 Volt, the brake will be active at 770 Volt (UDC); if the frequency converter has a mains voltage of 3 x 200 - 240 Volt, the brake will be active at 385 Volt (UDC).
You can also choose to use the brake resistance recommended by Danfoss (R_{REC}). This is a guarantee that the frequency converter is able to brake at the highest braking torque (M_{BR}). The recommended brake resistance can be seen from the ordering table for brake resistors.
R_{REC} calculated as:

$$R_{REC} = \frac{U_{DC^2} \times 100}{P_{motor} \times M\ br\ (\%) \times \eta_{motor} \times \eta_{inv}} \ [\Omega]$$

NB!
Remember to check that the brake resistance can manage a voltage of 850 Volt or 430 Volt, if Danfoss brake resistors are not being used.

$\bullet_{motor}$ is typically 0.90 and $\bullet_{INV}$ is typically 0.98. For 400 Volt and 200 Volt frequency converters, respectively, R_{REC} at 160% braking torque can be written as:

$$400\ volt\ R_{REC} = \frac{420139}{P_{motor}}\ [\Omega]$$

$$200\ volt\ R_{REC} = \frac{105035}{P_{motor}}\ [\Omega]$$

NB!
The brake resistance selected should have an ohmic value no more than 10% lower than that recommended by Danfoss. If a lower brake resistance is selected there is a risk of overcurrent, which can destroy the unit.

Calculation of braking power

When calculating the braking power, it must be ensured that the mean and peak powers can be dissipated to the brake resistor. The mean power is determined by the period time of the process, i.e. for how long the brake is applied in relation to the period time of the process. The peak power is determined by the braking torque, which means that during braking the brake resistor must be able to dissipate the energy input. The figure shows the relation between mean power and peak power.

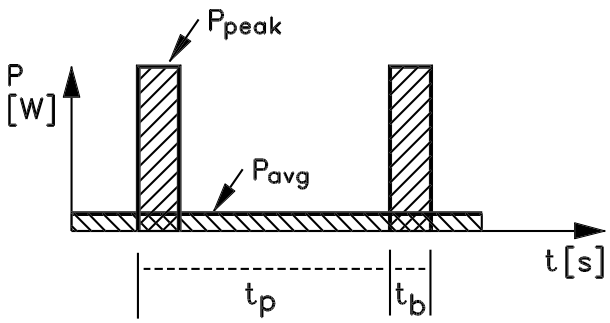

175ZA094.11

Calculation of peak power of brake resistor

$P_{PEAK,\ MEC}$ is the peak power at which the motor brakes on the motor shaft. It is calculated as follows:

$$P_{PEAK,\ MEC} = \frac{P_{MOTOR} \times M_{BR\ (\%)}}{100}\ [W]$$

P_{peak} is the term describing the braking power that is applied to the brake resistor when the motor applies the brakes. P_{PEAK} is smaller than $P_{PEAK,\ MEC}$, as the power is reduced by the efficiency of the motor and the frequency converter. The peak effect is calculated as follows:

$$P_{PEAK} = \frac{P_{MOTOR} \times M_{BR\ (\%)} \times \eta_{INV} \times \eta_{MOTOR}}{100}\ [W]$$

If you select Danfoss' recommended braking resistor (R_{REC}), you are certain that the braking resistance can generate a braking torque of 160% on the motor shaft.

Calculation of mean power on brake resistor

The mean power is determined by the period of the process, i.e. how long you brake in relation to the period of the process.
Duty-cycle for braking is calculated as follows:

$$Duty-cycle = \frac{T_b \times 100}{T_p}\ [\%]$$

T_p = The process time in seconds.
T_b = The braking time in seconds.

Danfoss sells brake resistors with variable duty-cycles up to 40%. For example, with a 10% duty-cycle, brake resistors can take up P_{peak} in 10% of the process period. The remaining 90% of the period time is spent on redirecting surplus heat.
The mean power at 10% duty cycle can be calculated as follows:

$$P_{avg} = P_{peak} \times 10\%\ [W]$$

The mean power at 40% duty cycle can be calculated as follows:

$$P_{avg} = P_{peak} \times 40\%\ [W]$$

These calculations apply to intermittent braking with period times of up to 120 seconds.

NB!
Period times longer than 120 sec. may lead to overheating of the resistor.

Continuous braking

For continuous braking, a brake resistor should be selected in which the constant braking power does not exceed the mean power P_{AVG} of the brake resistor. Please contact your Danfoss supplier for further information.

D.C. injection braking

If the three-phase winding of the stator is fed with direct current, a stationary magnetic field will be set up in the stator bore causing a voltage to be induced in the bars of the cage rotor as long as the rotor is in motion. Since the electrical resistance of the rotor cage is very low, even small induced voltages can create a high rotor current. This current will produce a strong braking effect on the bars and hence on the rotor. As the speed falls, the frequency of the induced voltage falls and with it the inductive impedance. The ohmic resistance of the rotor gradually becomes dominant and so increases the braking effect as the speed comes down. The braking torque generated falls away steeply just before standstill and finally ceases when there is no further movement. Direct current injection braking is therefore not suitable for actually holding a load at rest.

AC-braking

When the motor acts as a brake the DC-link voltage will increase because energy is fed back to the DC-link. The principle in AC-brake is to increase the magnetisation during the braking and thereby increase the thermal losses of the motor. Using par. 144 in VLT 2800 it is possible to adjust the size of the generator torque that can be applied to the motor without the intermediate circuit voltage exceeding the warning level.

The braking torque depends on the speed. With the AC-brake function enabled and parameter 144 = 1,3 (factory setting) it is possible to brake with about 50 % of rated torque below 2/3 of rated speed and with about 25 % at rated speed. The function is not working at low speed (below 1/3 of nominal motor speed). It is only possible to run for about 30 seconds with parameter 144 greater than 1.2.

NB!
If the value in parameter 144 is increased, the motor current will simultaneously increase significantly when generator loads are applied. The parameter should therefore only be changed if it is guaranteed during measurement that the motor current in all operating situations will never exceed the maximum permitted current in the motor. Please note: The current can not be read out from the display.

Optimal braking using resistor

Dynamic braking is useful from maximum speed down to a certain frequency. Below this frequency DC braking is to be applied as required. The most efficient way of doing this is by using a combination of dynamic and DC braking. See the illustration.

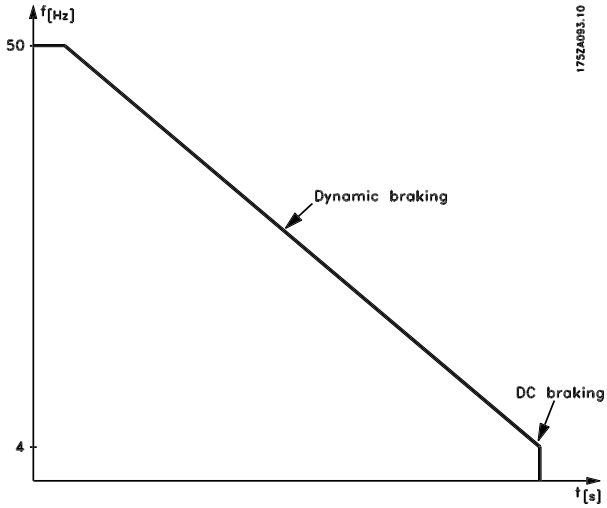

NB!
When changing from dynamic to DC braking, there will be a short period (2-6 milliseconds) with very low braking torque.

How to calculate optimum DC-brake cut in frequency:

$$Slip\ S = \frac{n_0 - n_n}{n_0} \times 100\ [\%]$$

$$Synchronous\ speed\ n_0 = \frac{f \times 60}{p}\ [1/min]$$

f = frequency
p = no. of pole pairs
n_n = speed of the rotor

$$DC-brake\ cut\ in\ frequency = 2 \times \frac{s \times f}{100}\ [Hz]$$

Brake cable

Max. length [m]: 20 m

The connection cable to the brake resistor must be screened/armoured. Connect the screen to the conductive backplate at the frequency converter and to the brake resistor metal cabinet by means of cable clamps.

NB!
If Danfoss brake resistors are not used, it must be ensured that the brake resistor is induction-free.

Protective functions during installation

When a brake resistor is installed, the best possible endeavors should be made to avoid overloads, as the heat generating from a brake resistor may involve a fire risk.

NB!
The brake resistor should be fitted to a nonflammable material.

For protection of the installation, a thermal relay should be fitted that cuts off the frequency converter if the brake current becomes too high. Flat pack resistors are self-protecting.

Calculate the brake current setting of the thermal relay as follows:

$$Itherm\ relay = \sqrt{\frac{P_{avg}}{R_{brakeresistor}}}$$

$R_{br}$is the current brake resistor value calculated in the section on “Calculation of brake resistance”. The figure shows an installation with a thermal relay.

The brake current setting of thermal relay for Danfoss 40% brakeresistors can be found in the table further on.

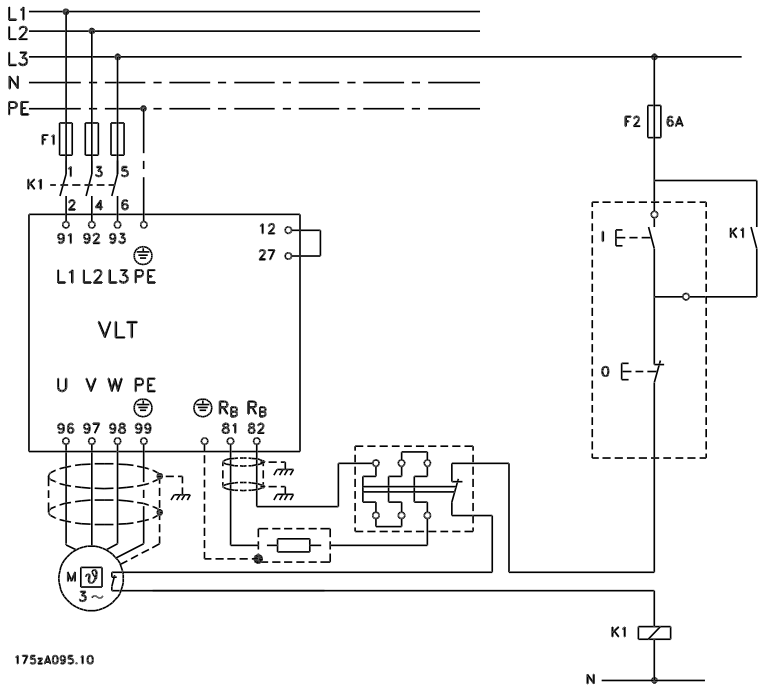

Some of the Danfoss Brakeresistors contain a thermal switch (see table further on). This switch is NC (normally closed) and can be used e.g. coasting stop reverse between terminal 12 and 27. The drive will then coast, if the thermal switch is opened.

NB!
The thermal switch is not a protective device. For protection, use a thermal switch as shown in the figure.

Brake resistors

Flatpack brake resistors IP 65

Type	P_{motor} [kW]	R_{MIN} [Ω]	Size [Ω] / [W] per item	Duty cycle %	Order no. 175Uxxxx
2803 (200 V)	0.37	297	330 Ω / 100 W	30	1003
2805 (200 V)	0.55	198	220 Ω / 100 W	20	1004
2807 (200 V)	0.75	135	150 Ω / 100 W	14	1005
2811 (200 V)	1.10	99	100 Ω / 100 W	8	1006
2815 (200 V)	1.50	69	72 Ω / 200 W	16	0992
2822 (200 V)	2.20	43	50 Ω / 200 W	9	0993
2840 (200 V)	3.70	21	50 Ω / 200 W	11	2x0993[1]
2805 (400 V)	0.55	747	830 Ω / 100 W	20	1000
2807 (400 V)	0.75	558	620 Ω / 100 W	14	1001
2811 (400 V)	1.10	387	430 Ω / 100 W	8	1002
2815 (400 V)	1.50	297	310 Ω / 200 W	16	0984
2822 (400 V)	2.20	198	210 Ω / 200 W	9	0987
2830 (400 V)	3.00	135	150 Ω / 200 W	5.5	0989
2830 (400 V)	3.00	135	300 Ω / 200 W	11	2x0985[1]
2840 (400 V)	4.00	99	240 Ω / 200 W	11	2x0986[1]

[1]These two resistors must be connected in parallel. Order two pieces.
See dimensions of Flatpack brake resistors on the next page.

Brake resistor for VLT 2803-2882 duty-cycle 40% data and codenumber

VLT type	Intermittent braking period time [seconds]	P_{motor} [kW]	R_{min} [Ω]	R_{rec} [Ω]	$P_{b, max}$ [kW]	Therm.relay [Amp]	Code number 175Uxxxx	Cable cross section [mm ^{2}]
2803 (200 V)	120	0,37	297	330	0,16	0,7	1900*	1,5**
2805 (200 V)	120	0,55	198	220	0,25	1,1	1901*	1,5**
2807 (200 V)	120	0,75	135	150	0,32	1,5	1902*	1,5**
2811 (200 V)	120	1,1	99	110	0,45	2,0	1975*	1,5**
2815 (200 V)	120	1,5	74	82	0,85	3,2	1903*	1,5**
2822 (200 V)	120	2,2	50	56	1,00	4,2	1904*	1,5**
2840 (200 V)	120	3,7	22	25	3,00	11,0	1925	1,5**
2805 (400 V)	120	0,55	747	830	0,45	0,7	1976*	1,5**
2807 (400 V)	120	0,75	558	620	0,32	0,7	1910*	1,5**
2811 (400 V)	120	1,1	387	430	0,85	1,4	1911*	1,5**
2815 (400 V)	120	1,5	297	330	0,85	1,6	1912*	1,5**
2822 (400 V)	120	2,2	198	220	1,00	2,1	1913*	1,5**
2830 (400 V)	120	3,0	135	150	1,35	3,0	1914*	1,5**
2840 (400 V)	120	4,0	99	110	1,60	3,8	1979*	1,5**
2855 (400 V)	120	5,5	80	80	2,00	5,0	1977*	1,5**
2875 (400 V)	120	7,5	56	56	3,00	6,8	1978*	1,5**
2880 (400 V)	120	11	40	40	5,00	11,2	1997*	1,5**
2881 (400 V)	120	15	30	30	10,0	18,3	1998	2,5**
2882 (400 V)	120	18,5	25	25	13,0	22,8	1999	4**

*With KLIXON switch
**Always observe national and local regulations

P_{motor}	: Rated motor size for VLT type
R_{min}	: Minimum permissible brake resistor
R_{rec}	: Recommended brake resistor (Danfoss)
$P_{b, max}$	: Brake resistor rated power as stated by supplier
Therm. relay	: Brake current setting of thermal relay
Code number	: Order numbers for Danfoss brake resistors
Cable cross section	: Recommended minimum value based upon PVC insulated copper cable, 30 degree Celsius ambient temperature with normal heat dissipation

See dimensions of brake resistor for VLT 2803-2882 duty cycle 40% in instruction MI.90.FX.YY.

■ **Dimensions of Flatpack brake resistors**

100 W 200 W

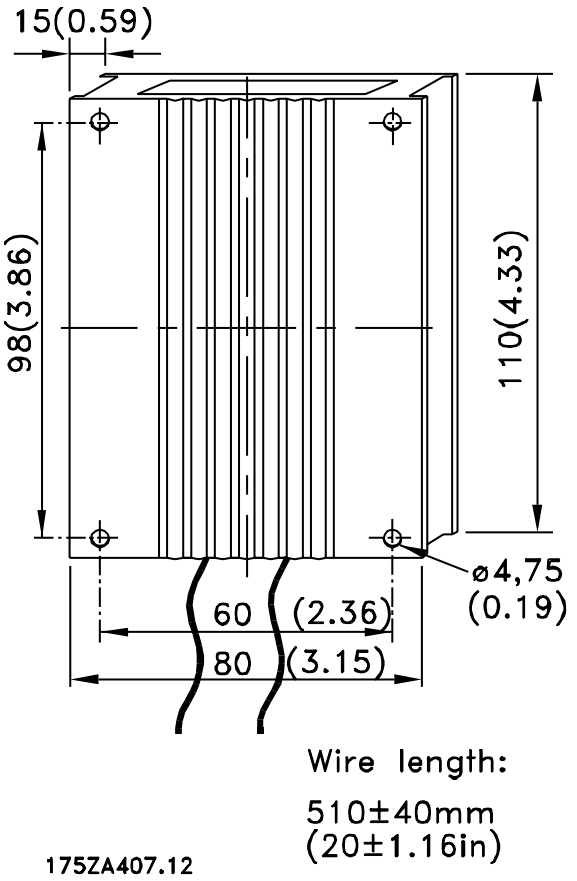

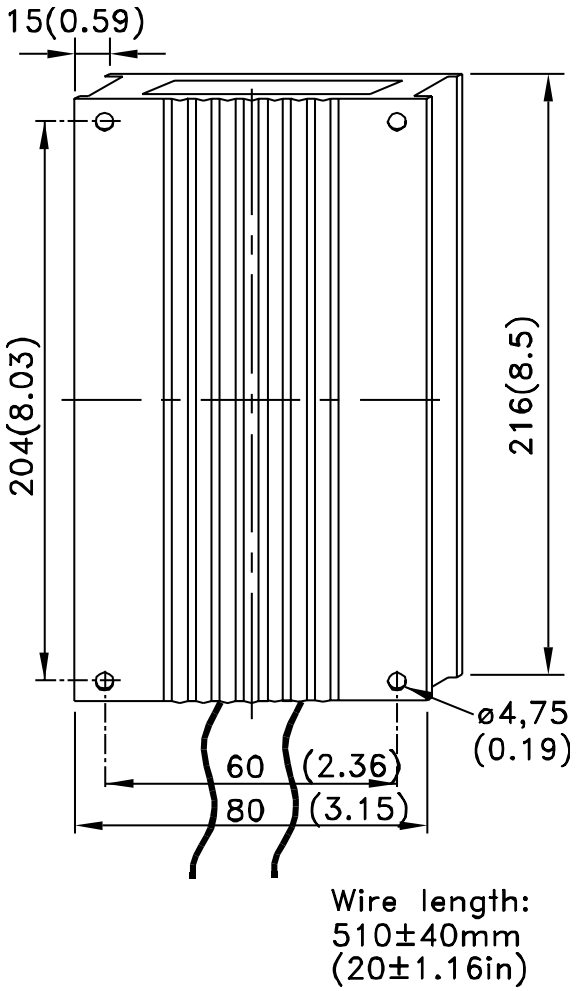

Control unit

On the front of the frequency converter there is a control panel.

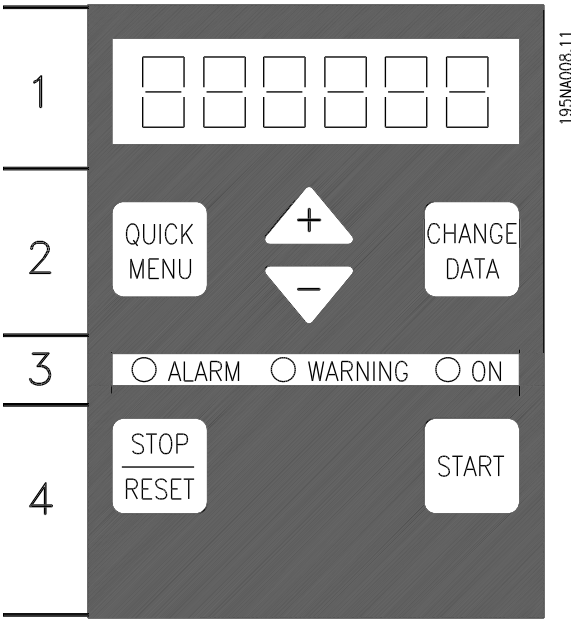

The control panel is divided into four function groups:

1. Six-digit LED display.
2. Keys for changing parameters and shifting display function.
3. Indicator lamps.
4. Keys for local operation.

All displays of data are in the form of a six-digit LED display capable of showing one item of operating data continuously during normal operation. As a supplement to the display, there are three indicator lamps for indication of mains connection (ON), warning (WARNING) and alarm (ALARM). Most of the frequency converter's parameter Setups can be changed immediately via the control panel, unless this function has been programmed as *Locked* [1] via parameter 018 *Lock for data changes*.

Control keys

[QUICK MENU] allows access to the parameters used for the Quick menu.
The[QUICK MENU] key is also used if a change to a parameter value is not to be implemented.
See also [QUICK MENU] + [+].

[CHANGE DATA] is used for changing a setting.
The [CHANGE DATA] key is also used for confirming a change of parameter settings.

[+] / [-] are used for selecting parameters and for changing parameter values.
These keys are also used in Display mode for selecting the display of an operating value.

The **[QUICK MENU] + [+]** keys must be pressed at the same time to give access to all parameters. See *Menu mode.*

[STOP/RESET] is used for stopping the connected motor or for resetting the frequency converter after a trip.
Can be selected as *Active* [1] or *Not active* [0] via parameter 014 *Local stop/reset*. In Display mode, the display will flash if the stop function is activated.

NB!
If the [STOP/RESET] key is set at *Not active* [0] in parameter 014 *Local stop/reset,* and there is no stop command via the digital inputs or serial communication, the motor can only be stopped by disconnecting the mains voltage to the frequency converter.

[START] is used for starting the frequency converter. It is always active, but the [START] key cannot override a stop command.

Manual initialisation

Disconnect mains voltage. Hold the [QUICK MENU] + [+] + [CHANGE DATA] keys down while simultaneously reconnecting the mains voltage. Release the keys; the frequency converter has now been programmed for the factory setting.

Display readout states

Display mode

In normal operation, one item of operating data can be displayed continuously at the operator's own choice. By means of the [+/-] keys the following options can be selected in Display mode:

- Output frequency [Hz]
- Output current [A]
- Output voltage [V]
- Intermediate circuit voltage [V]
- Output power [kW]
- Scaled output frequency f_{out} x p008

Menu mode

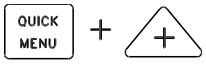

In order to enter the Menu mode [QUICK MENU] + [+] must be activated at the same time.
In Menu mode, most of the frequency converter parameters can be changed. Scroll through the parameters using the [+/-] keys. While scrolling in the Menu mode proceeds, the parameter number will flash.

The display shows that the setting in parameter 102 *Motor power $P_{M,N}$* is 0.75. In order to change the value of 0.75, [CHANGE DATA] must first be activated; the parameter value can then be changed using the [+/-] keys.

If for a given parameter the display shows three dots at the right, it means that the parameter value has more than three digits. In order to see the value, activate [CHANGE DATA].

The display shows that in parameter 128 *Motor thermal protection* the selection made is *Thermistor trip* [2].

Quick menu

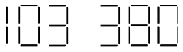

Using the [QUICK MENU] key, it is possible to access the 12 most important parameters of the frequency converter. After programming, the frequency converter is in most cases ready for operation. When the [QUICK MENU] key is activated in Display mode, the Quick menu starts. Scroll through the quick menu using the [+/-] keys and change the data values by first pressing [CHANGE DATA] and then changing the parameter value with the [+/-] keys.
TheQuick menu parameters are:

- Par. 100 *Configuration*
- Par. 101 *Torque characteristic*
- Par. 102 *Motor power $P_{M,N}$*
- Par. 103 *Motor voltage $U_{M,N}$*
- Par. 104 *Motor frequency $f_{M,N}$*
- Par. 105 *Motor current $I_{M,N}$*
- Par. 106 *Rated motor speed $n_{M,N}$*
- Par. 107 *Automatic motor adaptation*
- Par. 202 *Output frequency high limit f_{MAX}*
- Par. 203 *Reference range*
- Par. 204 *Minimum reference Ref_{MIN}*
- Par. 205 *Maximum reference Ref_{MAX}*
- Par. 207 *Ramp-up time*
- Par. 208 *Ramp-down time*
- Par. 002 *Local/remote operation*
- Par. 003 *Local reference*

Parameter 102 - 106 can be read out from the motor's nameplate.

Hand Auto

During normal operation the frequency converter is in Auto mode, where the reference signal is given externally, analog or digital via the control terminals. However, in Hand mode, it is possible to give the reference signal locally via the control panel.

On the control terminals, the following control signals will remain active when Hand mode is activated:

- Hand Start (LCP2)
- Off Stop (LCP2)
- Auto Start (LCP2)

- Reset
- Coasting Stop Inverse
- Reset and Coasting Stop Inverse
- Quick Stop Inverse
- Stop Inverse
- Reversing
- DC Braking Inverse
- Setup Select LSB
- Setup Select MSB
- Thermistor
- Precise Stop Inverse
- Precise Stop/Start
- Jog
- Stop Command Via Serial Comm.

Switching between Auto- and Hand mode:
By activating the [Change Data] key in [Display Mode], the display will indicate the mode of the frequency converter.

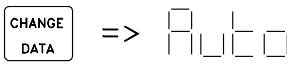

Scroll up/down in order to switch to Hand mode:

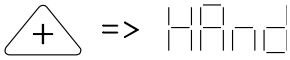

When the frequency converter is in Hand mode the readout will be like:

and the reference can be changed by using the following keys:

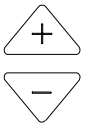

NB!
Please note, that parameter 020 may block the choice of mode.

Automatic motor tuning
Automatic motor tuning (AMT) is performed as follows:

1. In parameter 107 *Automatic motor tuning* select data value [2]. “107” will now flash, and “2” will not flash.
2. AMT is activated by pressing start. “107” will now flash and dashes will move from left to right in the data value field.
3. When “107” appears once more with the data value [0], AMT is complete. Press [STOP/ RESET] to save the motor data.
4. “107” will then continue to flash with the data value [0]. You can now proceed.

NB!
VLT 2880-2882 do not have AMT function.

The LCP 2 Control unit, option

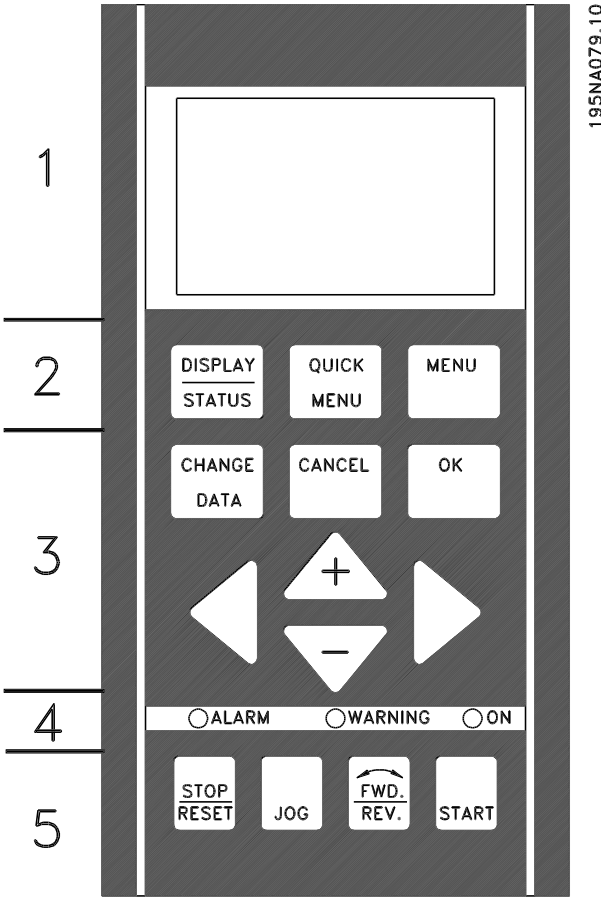

The frequency converter can be combined with an LCP control unit (Local Control Panel - LCP 2) which makes up a complete interface for operation and programming of the frequency converter. The LCP 2 control unit can be attached up to three metres from the frequency converter, e.g. on a front panel, using an accessory kit.

The control panel is divided into five functional groups:

1. Display.
2. Keys used to change the display function.
3. Keys used to change the programme parameters.
4. Indicator lamps.
5. Local control keys.

All data is displayed via a 4-line alphanumeric display, which during normal operation will be able to continuously display 4 items of operating data and 3 operating modes. During programming all information needed for quick, effective parameter setup of the frequency converter will be displayed. As a supplement to the display, there are three indicator lamps for voltage (ON), warning (WARNING) and alarm (ALARM). All frequency converter parameter Setups can be changed immediately from the control panel, unless this function has been programmed as *Locked* [1] via parameter 018 *Lock for data changes*.

Control keys for parameter Setup

The control keys are divided into functions, in such a way that the keys between the display and the indicator lamps are used for parameter Setup, including selection of the display's view mode during normal operation.

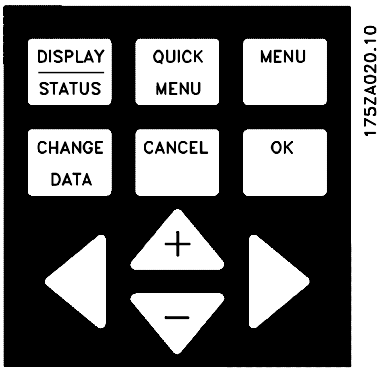

[DISPLAY/STATUS] is used to select the display's view mode or to change back to Display mode from either Quick Menu or Menu mode.

[QUICK MENU] provides access to the parameters used in the Quick Menu. It is possible to switch between Quick Menu and Menu mode.

[MENU] gives access to all parameters. It is possible to switch between Menu mode and Quick Menu.

[CHANGE DATA] is used to change a parameter that has been selected either in Menu mode or Quick Menu.

[CANCEL] is used if a change to the selected parameter is not to be implemented.

[OK] is used to confirm a change to a selected parameter.

[+ / -] are used for selecting parameters and for changing parameter values.
These keys are also used in Display mode to switch between the readouts of operating variables.

[< >] are used for selecting parameter group and to move the cursor when changing a numerical value.

Indicator lamps

At the bottom of the control panel are a red alarm lamp, a yellow warning lamp and a green voltage indicator lamp.

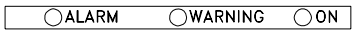

If certain threshold values are exceeded, the alarm and/or warning lamp are activated, while a status or alarm text is shown on the display.

NB!
The voltage indicator lamp is activated when voltage is connected to the frequency converter.

Local control

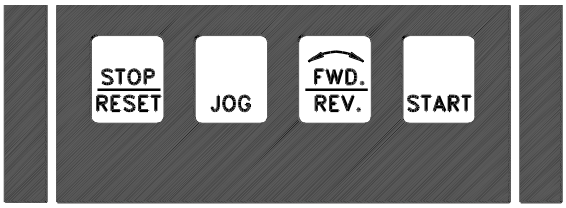

[STOP/RESET] is used for stopping the motor connected or for resetting the frequency converter after a drop-out (trip). Can be set to active or inactive via parameter 014 *Local stop*.
If stop is activated Display line 2 will flash.

NB!
If an external stop function is not selected and the [STOP/RESET] key is set to inactive, the motor can only be stopped by disconnecting the voltage to the motor or the frequency converter.

[JOG] changes the output frequency to a preset frequency while the key is held down. Can be set to active or inactive via parameter 015 *Local jog*.

[FWD / REV] changes the direction of rotation of the motor, which is indicated by means of the arrow on the display. Can be set to active or inactive via parameter 016 *Local reversing*. The [FWD/REV] key is only active when parameter 002 *Local/remote operation* is set to *Local control*.

[START] is used to start the frequency converter. Is always active, but cannot override a stop command.

NB!
If the local control keys are set to inactive, these will both become active when the frequency converter is set to *Local control* and *Remote control* via parameter 002 *Local/remote operation*, with the exception of [FWD/REV], which is only active in Local control.

Display mode

In normal operation, up to 4 different display data items can optionally be shown continuously: 1,1, 1,2, 1,3 and 2. The present operation status or alarms and warnings that have been generated are displayed in line 2 in the form of a number.
In the event of alarms this is displayed in lines 3 and 4 with explanatory text.
A warning will appear flashing in line 2 with explanatory text in line 1. The active Setup will also appear on the display.
The arrow indicates the selected direction of rotation. Here the frequency converter shows that it has an active reversing signal. The body of the arrow will disappear if a stop command is given, or if the output frequency drops below 0.1 Hz.
The bottom line displays the frequency transformer's status. The scrollbar shows which operating values can be displayed in lines 1 and 2 in Display mode. Changes are made using the [+ / -] keys.

Operating data	Unit
Resulting reference	[%]
Resulting reference	[unit]
Feedback	[unit]
Output frequency	[Hz]
Output frequency x scaling	[-]
Motor current	[A]
Torque	[%]
Power	[kW]
Power	[HP]
Motor voltage	[V]
DC link voltage	[V]
Thermal load motor	[%]
Thermal load	[%]
Hours run	[hours]
Digital input	[binary]
Pulse reference	[Hz]
External reference	[%]
Status word	[hex]
Heatsink temperature	[°C]
Alarm word	[hex]
Control word	[hex]
Warning word	[hex]
Extended status word	[hex]
Analogue input 53	[V]
Analogue input 60	[mA]

Three operating data items can be shown in the first display line, and one operating variable can be shown in the second display line. Is programmed via parameters 009, 010, 011 and 012 *Display readout* .

Display modes

The LCP control unit has different display modes, which depend on the mode selected for the frequency converter.

Display mode I:
This display mode is standard after startup or initialisation.

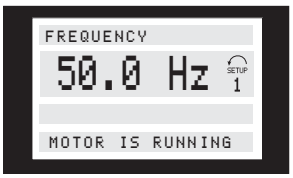

Line 2 shows the data value of an operating data item with unit, and line 1 contains a text that explains line 2. In the example, *Frequency* has been selected as readout via parameter 009 *Large display readout*. In normal operation, another variable can be entered immediately using the [+ / -] keys.

Display mode II:
Switch between Display modes I and II is performed by briefly pressing the [DISPLAY / STATUS] key.

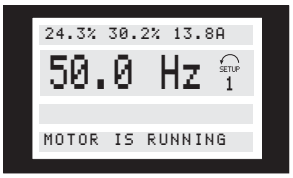

In this mode, all data values for four operating data items with any pertaining units are shown, see table. In the example, the following have been selected: *Frequency*, *Reference*, *Torque* and *Current* as readout in the first and second line.

Display mode III:
This display mode is called up as long as the [DISPLAY / STATUS] key is held down. When the key is released it switches back to Display mode II, unless the key is held down for less than approx. 1 sec., in which case the system always reverts to Display mode I.

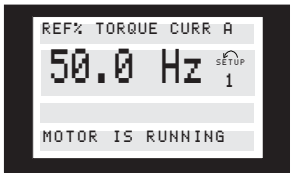

Here you can read out the parameter names and units for operating data in the first and second lines. Line 2 in the display remains unchanged.

Display mode IV:
This display mode can be called up during operation if a change has to be made in another Setup without stopping the frequency converter. This function is activated in parameter 005 *Programming Setup*.

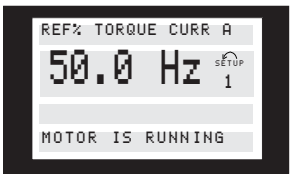

Here the programming Setup number 2 will flash to the right of the active Setup.

Parameter Setup

A frequency converter's comprehensive work area can be accessed via a large number of parameters, making it possible to adapt its functionality for a specific application. To provide a better overview of the many parameters, there is a choice of two programming modes - Menu mode and Quick Menu mode. The former provides access to all parameters. The latter takes the user through the parameters, which make it possible to start operating the frequency converter in most cases, in accordance with the Setup made. Regardless of the mode of programming, a change of a parameter will take effect and be visible both in the Menu mode and in the Quick menu mode.

Structure for Quick menu mode v Menu mode
In addition to having a name, each parameter is linked up with a number which is the same regardless of the programming mode. In Menu mode, parameters will be split into groups, with the first digit (left) of the parameter number indicating the group number of the parameter in question.

- Using the [QUICK MENU] key, it is possible to get access to the most important parameters of the frequency converter. After programming, the frequency converter is in most cases ready for operation. Scroll through the Quick menu using the [+ / -] keys and change the data values by pressing [CHANGE DATA] + [OK].
- The Menu mode allows choosing and changing all parameters as required. However, some parameters will be "shaded off", depending on the choice in parameter 100 *Configuration* .

Quick menu with LCP 2 control unit

Start Quick Setup by pressing the [QUICK MENU] key, which will bring out the following display values:

At the bottom of the display, the parameter number and name are given together with the status/value of the first parameter under the Quick menu. The first time the [QUICK MENU] key is pressed after the unit has been switched on, the readouts always start in pos. 1 - see table below.

Pos.	Parameter no.	Unit
1	001 Language	
2	102 Motor power	[kW]
3	103 Motor voltage	[V]
4	104 Motor frequency	[Hz]
5	105 Motor current	[A]
6	106 Rated motor speed	[rpm]
7	107 AMT	
8	204 Minimum reference	[Hz]
9	205 Maximum reference	[Hz]
10	207 Ramp-up time	[sec]
11	208 Ramp-down time	[sec]
12	002 Local/remote operation	
13	003 Local reference	[Hz]

Parameter selection

Menu mode is started by pressing the [MENU] key, which produces the following readout on the display:

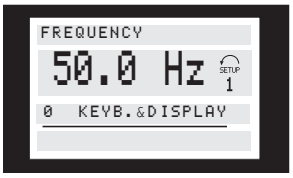

Line 3 on the display shows the parameter group number and name.

In Menu mode, the parameters are divided into groups. Selection of parameter group is effected using the [< >] keys.
The following parameter groups will be accessible:

Group no.	Parameter group
0	Operation & Display
1	Load & Motor
2	References & Limits
3	Inputs & Outputs
4	Special functions
5	Serial communication
6	Technical functions

When the required parameter group has been selected, each parameter can be chosen by means of the [+ / -] keys:

The 3rd line of the display shows the parameter number and name, while the status/value of the selected parameter is shown in line 4.

Changing data

Regardless of whether a parameter has been selected under the Quick menu or the Menu mode, the procedure for changing data will be the same. Pressing the [CHANGE DATA] key gives access to changing the selected parameter, following which the underlining in line 4 will flash on the display. The procedure for changing data depends on whether the selected parameter represents a numerical data value or a text value.

Changing a data value

If the selected parameter is a text value, the text value is changed by means of the [+ / -] keys.

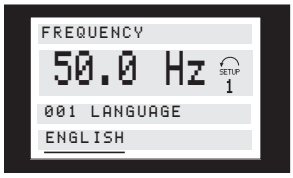

The bottom display line will show the value that will be entered (saved) when acknowledgment is given [OK].

Change of numeric data value

If the selected parameter is represented by a numerical data value, a digit is first chosen using the [< >] keys.

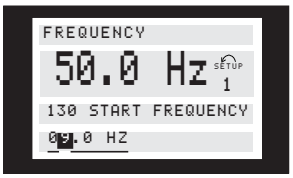

The selected digit can then be changed infinitely variably using the [+ / -] keys:

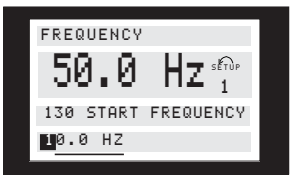

The chosen digit is indicated by the digit flashing. The bottom display line shows the data value that will be entered (saved) when signing off with [OK].

■ Manual initialisation

NB!
Manual initialisation is not possible on the LCP 2 175N0131 control unit. It is, however, possible to perform an initialisation via par. 620 *Operation mode*:

The following parameters are not set to zero when initialising via par. 620 *Operation mode*.

- par. 500 *Address*
- par. 501 *Baud rate*
- par. 600 *Operating hours*
- par. 601 *Hours run*
- par. 602 *kWh counter*
- par. 603 *Number of power-ups*
- par. 604 *Number of overtemperatures*
- par. 605 *Number of overvoltages*
- par. 615-617 *Fault log*

Mechanical dimensions

The drawings below describe the mechanical dimensions. All dimensions are in mm.

NB!
Please note that all filter options must be vertically mounted.

VLT 2803-2815 200-240 Volt
VLT 2805-2815 380-480 Volt

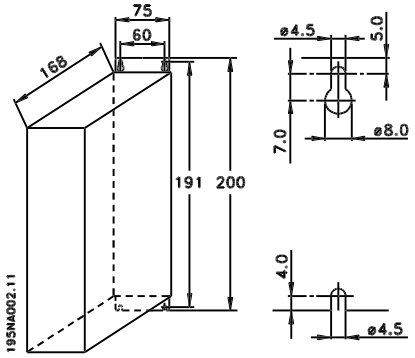

VLT 2822 200-240 Volt
VLT 2822-2840 380-480 Volt

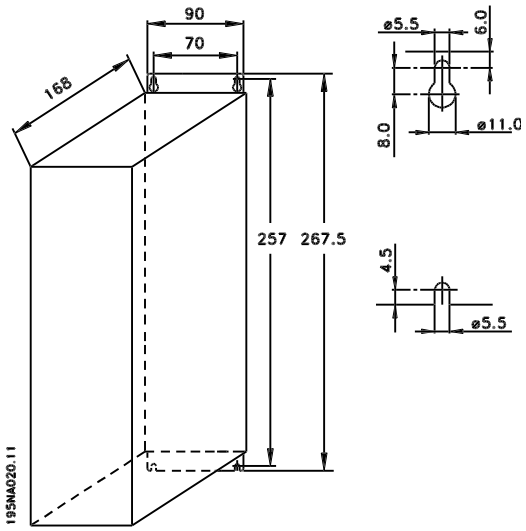

VLT 2822 220 - 240 V, PD2
VLT 2840 200-240 Volt
VLT 2855-2875 380-480 Volt

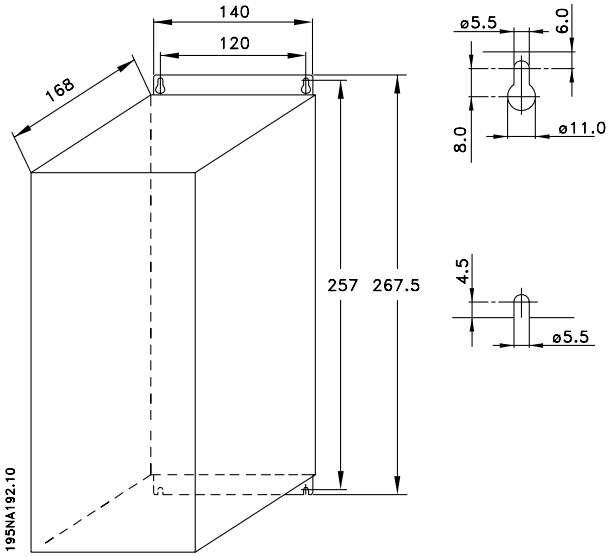

VLT 2840 220-240 V, PD2
VLT 2880-82 380-480V

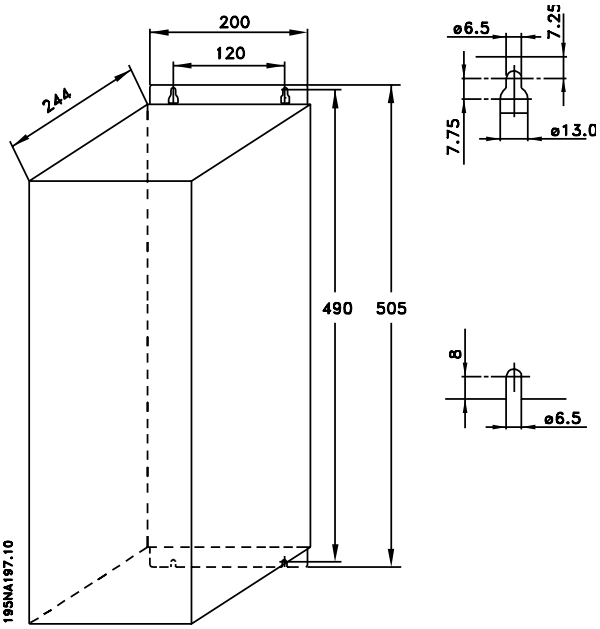

Motor coils (195N3110)

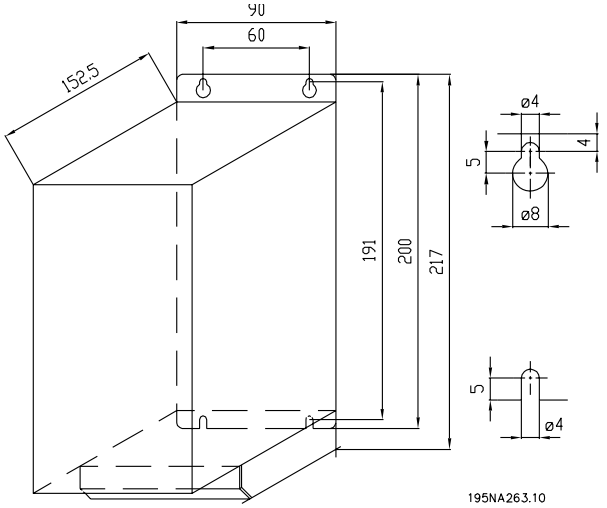

RFI 1B filter (195N3103)

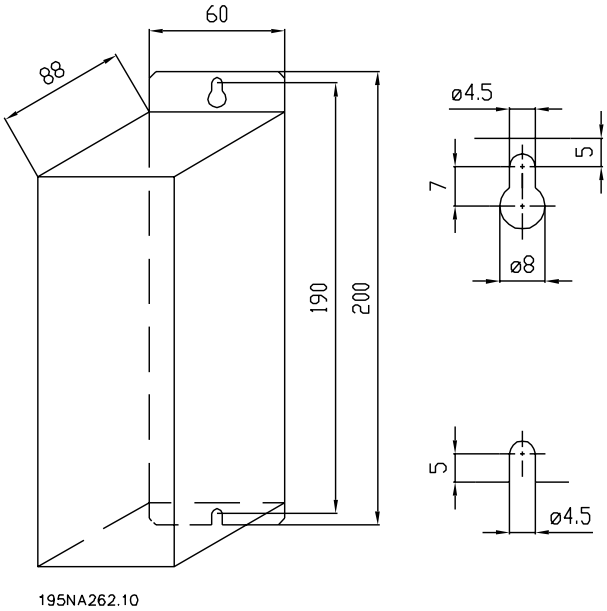

Terminal cover

The drawing below gives the dimensions for NEMA 1 terminal covers for VLT 2803-2875.
Dimension 'a' depends on the unit type.

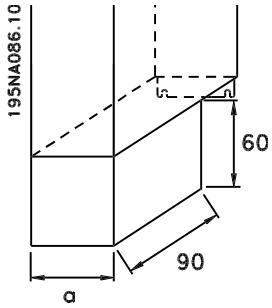

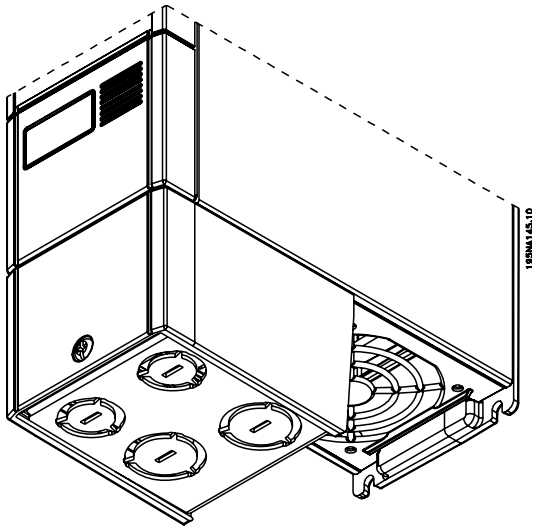

IP 21 solution

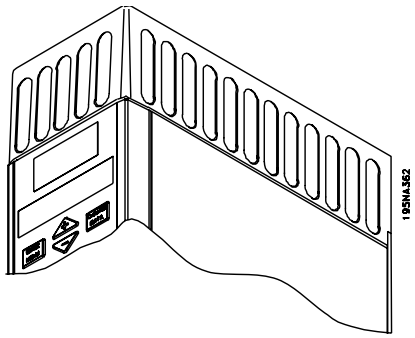

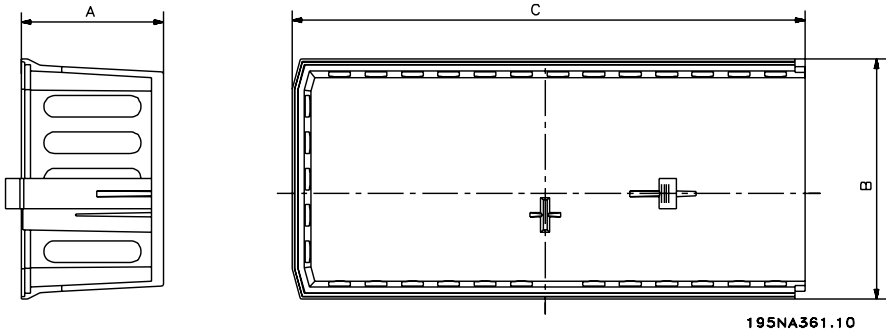

Dimensions

Type	Code number	A	B	C
VLT 2803-2815 200-240 V, VLT 2805-2815 380-480 V	195N2118	47	80	170
VLT 2822 200-240 V, VLT 2822-2840 380-480 V	195N2119	47	95	170
VLT 2840 200-240 V, VLT 2822 PD2, TR1 2855-2875 380-480 V	195N2120	47	145	170
TR1 2880-2882 380-480 V, VLT 2840 PD2	195N2126	47	205	245

■ **EMC filter for long motor cables**

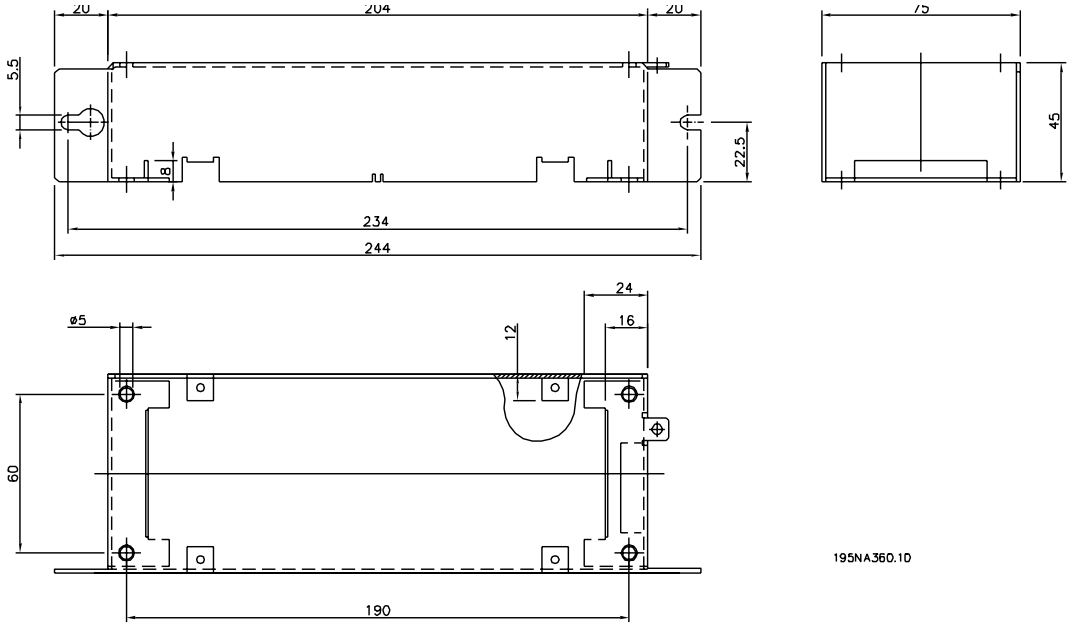

192H4719

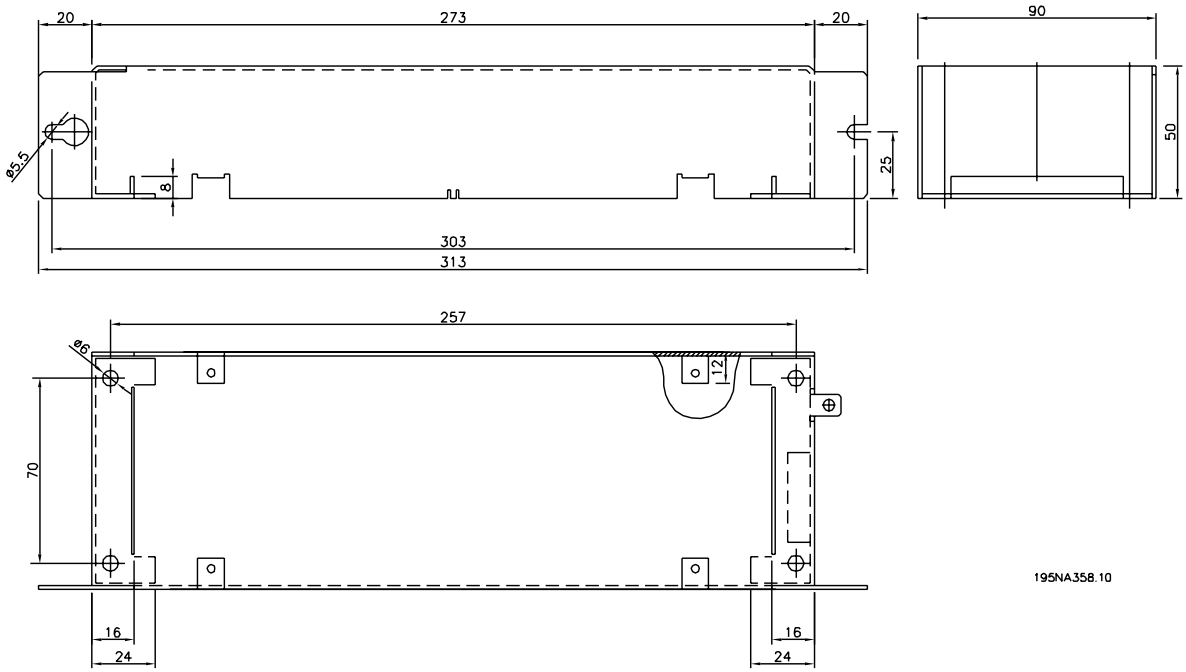

192H4720

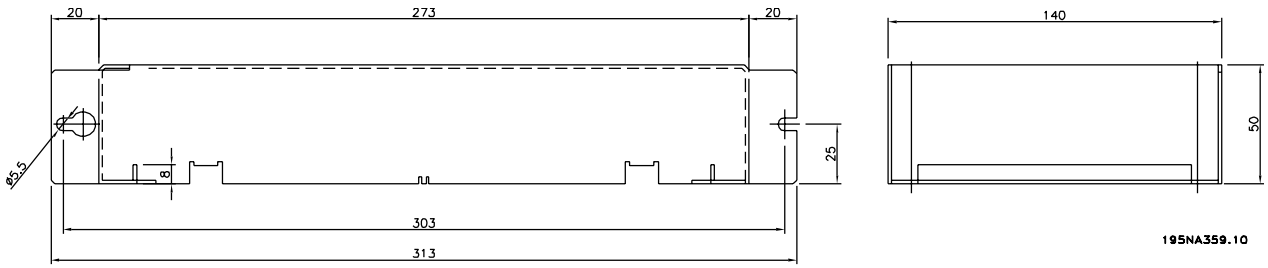
20
273
20
140
ø5.5
8
25
50
303
313
195NA359.10

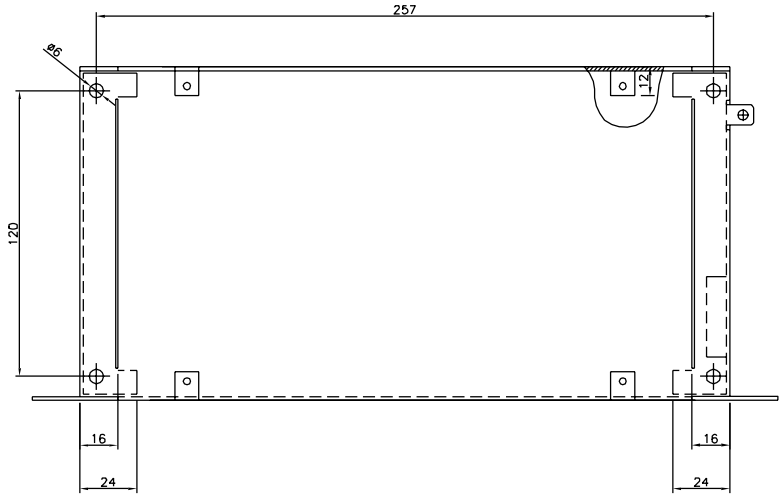
257
ø6
12
120
16
24
16
24

192H4893

Mechanical installation

Please pay attention to the requirements that apply to installation.

The frequency converter is cooled by means of air circulation. For the unit to be able to release its cooling air, the minimum free distance above and below the unit must be minimum 100 mm . To protect the unit from overheating, it must be ensured that the ambient temperature does not rise above the max. temperature stated for the frequency converter and that the 24-hour average temperature is not exceeded. The max. temperature and 24-hour average can be seen in *General technical data*. If the ambient temperature is in the range of 45 °C - 55 °C, derating of the frequency converter is to be carried out. See *Derating for ambient temperature*. Please note that the service life of the frequency converter will be reduced if no allowance is made for the derating for ambient temperature.

Integration

All units with enclosure IP 20 must be integrated in cabinets and panels. IP 20 is not suitable for remote mounting. In some countries, e.g. in the USA, units with enclosure NEMA 1 are approved for remote mounting.

Spacing for mechanical installation

All units require a minimum of 100 mm air between other components and vents of the enclosure.

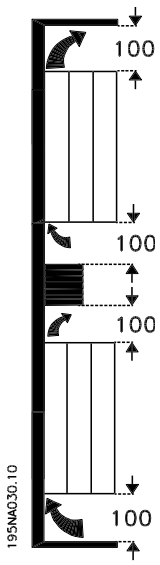

Side-by-side

All VLT 2800 units can be installed side-by-side and in any position, as the units do not require ventilation on the side.

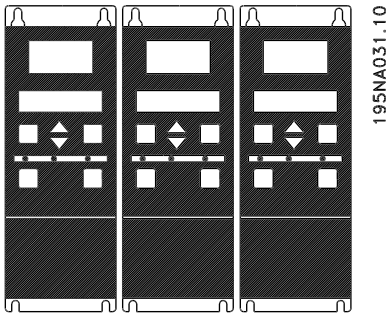

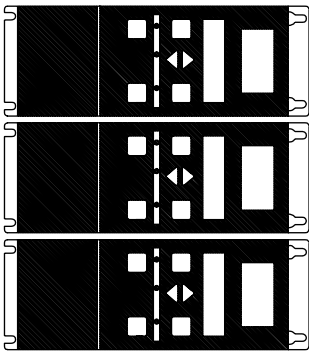

NB!
With the IP 21 solution all units require a minimum of 100 mm air on each side. This means that side-by-side mounting is not allowed.

Installation

High voltage warning

The voltage of the frequency converter is dangerous whenever the equipment is connected to mains. Incorrect installation of the motor or frequency converter may cause damage to the equipment, serious injury or death. Comply with the instructions in this manual, as well as national and local rules and safety regulations.
Touching the electrical parts may be fatal - even after the equipment has been disconnected from mains: Wait at least 4 minutes for current dissipate.

NB!
It is the responsibility of the user or installer to ensure correct earthing and protection in accordance with national and local standards.

Earthing

Comply with the following at installation:

- Safety earthing: The drive has a high leakage current and must be earthed properly for safety. Follow all local safety regulations.
- High frequency earthing: Keep earthing connections as short as possible.

Connect all earthing SYSTEMs to ensure the lowest possible conductor impedance. The lowest possible conductor impedance is achieved by keeping the conductor as short as possible and by grounding with the greatest possible surface area. If multiple drives are installed in a cabinet, the cabinet backplate, which must be made of metal, should be used as a joint earth reference plate. The drives must be fitted to the backplate at the lowest possible impedance.

To achieve low impedance, connect the drive to the backplate with the drive fastening bolts. Remove all paint from the contact points.

Cables

The control cable and the mains cable should be installed separately from motor cables to prevent noise transfer. As a rule a distance of 20 cm is sufficient, but it is recommended that the distance is as great as possible, particularly when cables are installed in parallel over large distances.

For sensitive signal cables such as telephone or data cables the greatest possible distance is recommended. Please note that the required distance depends on the installation and the sensitivity of the signal cables, and that for this reason exact values cannot be given.

When being placed in cable trays, sensitive cables may not be placed in the same cable tray as the motor cable. If signal cables run across power cables, this is done at an angle of 90 degrees. Remember that all noise-filled inlet and outlet cables to a cabinet must be screened/armoured.
See also *EMC-correct electrical installation*.

Screened/armoured cables

The screen must have low HF impedance, which is achieved by a braided screen of copper, aluminium or iron. Screen reinforcement intended for mechanical protection, for example, is not suitable for EMC-correct installation. See also *Use of EMC-correct cables*.

Extra protection

RCD relays, multiple protective earthing or earthing can be used as extra protection, provided that local safety regulations are complied with. In the case of an earth fault, a DC content may develop in the faulty current. Never use an RCD (ELCB relay), type A, as it is not suitable for DC faulty currents. If RCD relays are used, local regulations must be complied with.If RCD relays are used, they must be:

- Suitable for protecting equipment with a DC content in the faulty current (3-phase bridge rectifier).
- Suitable for a pulse-shaped, brief discharge on power-up.
- Suitable for a high leakage current.

N must be connected before L1 for single phase 200 V reduced leakage current units (type code R4).

High voltage test

A high voltage test can be performed by short-circuiting terminals U, V, W, L1, L2 and L3, and applying max. 2160 V DC in 1 sec. between this short-circuit and terminal 95.

Do not perform a high voltage test between the control terminals and the chassis, because the voltage potential of the

control card cannot exceed approx. 100 volt with respect to chassis due to a voltage limiting circuitry.
The terminals are protected against direct hazardous access through barriers.

■ EMC-correct electrical installation

General points to be observed to ensure EMC-correct electrical installation.

- Use only screened/armoured motor cables and screened/armoured control cables.
- Connect the screen to earth at both ends.
- Avoid installation with twisted screen ends (pigtails), since this ruins the screening effect at high frequencies. Use cable clamps instead.
- It is important to ensure good electrical contact from the installation plate through the installation screws to the metal cabinet of the frequency converter.
- Use starwashers and galvanically conductive installation plates.
- Do not use unscreened/unarmoured motor cables in the installation cabinets.

The illustration below shows EMC-correct electrical installation, in which the frequency converter has been fitted in an installation cabinet and connected to a PLC.

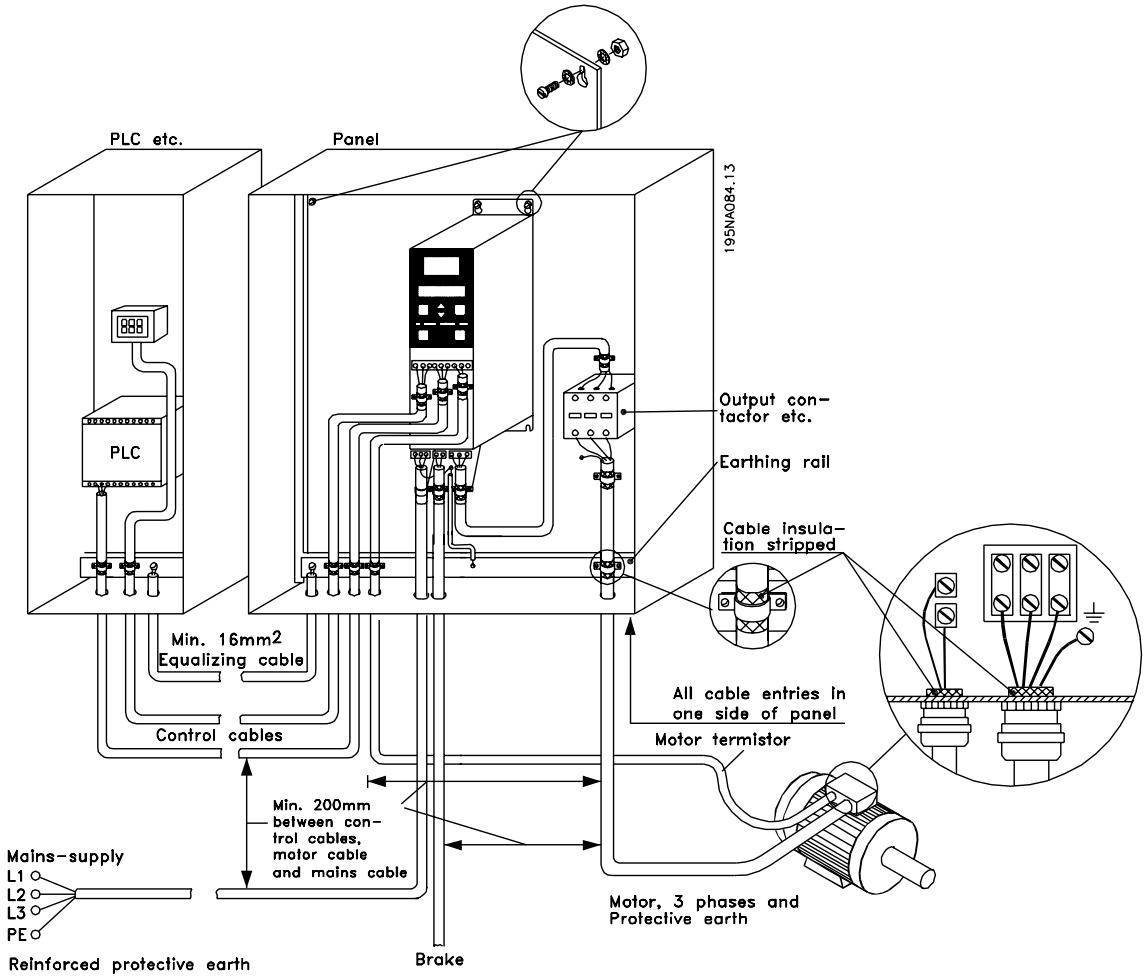

Use of EMC compliant cables

In order to comply with requirements for EMC immunity of the control cables and EMC emissions from the motor cables screened/armoured cables must be used.

The ability of a cable to reduce the amount of ingoing and outgoing radiation of electric noise depends on the transfer impedance (Z_T). The screen of a cable is normally designed to reduce the transfer of electric noise, and a screen with a lower Z_T is more effective than a screen with a higher Z_T.

Z_T is rarely stated by cable manufacturers, but it is often possible to estimate Z_T by looking at and assessing the physical design of the cable.

Z_T can be assessed on the basis of the following factors:

- the contact resistance between the individual screen conductors.
- Screen coverage, i.e. the physical area of the cable covered by the screen. Is often stated as a percentage and should be no less than 85%.
- The screen type, i.e. braided or twisted pattern. A braided pattern or closed pipe is recommended.

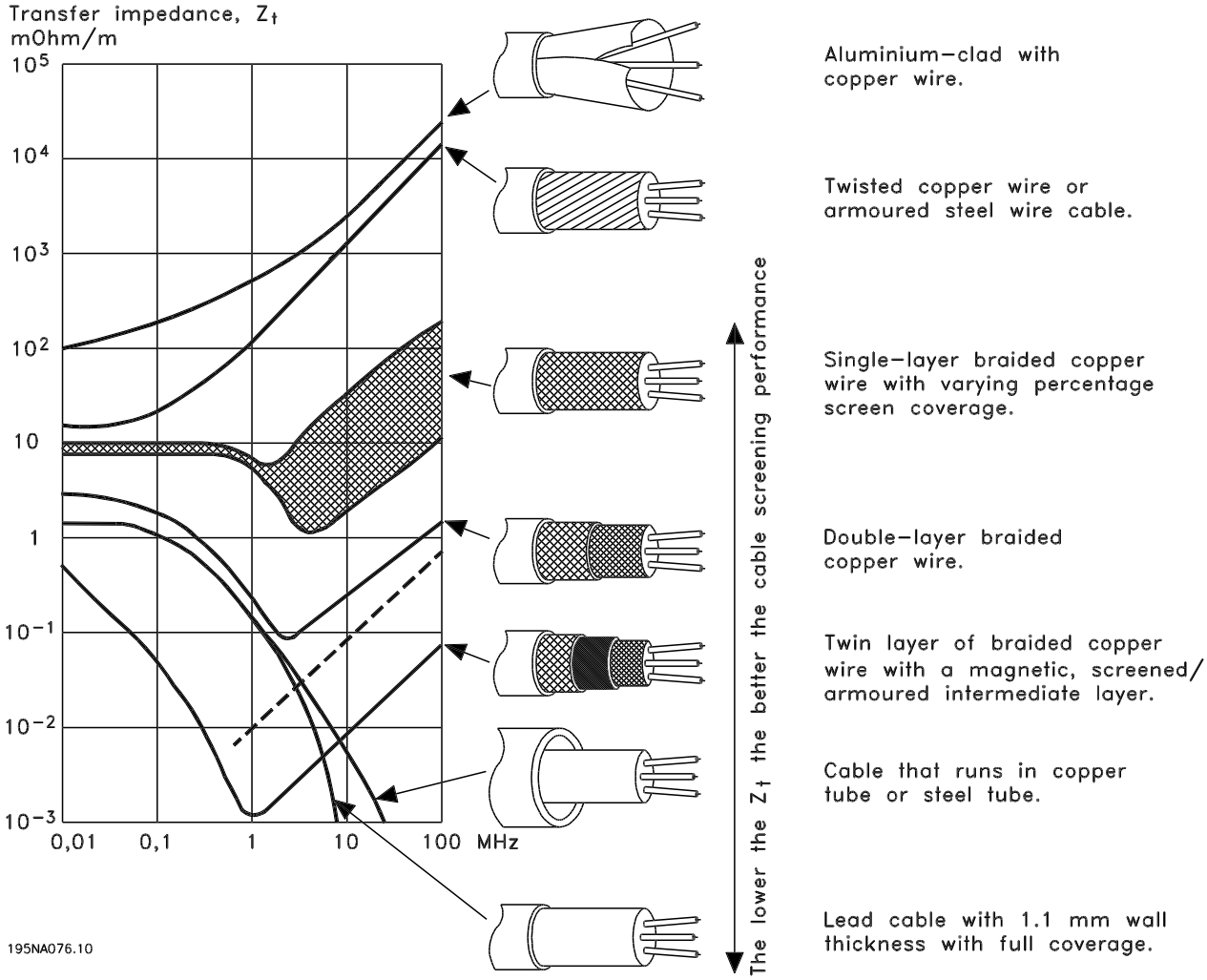

Installation

■ Earthing of screened/armoured control cables

In general control cables must be screened/armoured, and the screen must be connected to the unit's metal cabinet with a cable clamp at each end.

The drawing below shows the correct way to perform the earthing, and what to do when in doubt.

1. **Correct earthing**
   Control cables and cables for serial communication must be attached with cable clamps at both ends to ensure maximum possible electrical contact.
2. **Incorrect earthing**
   Do not use twisted screen ends that are plaited together (pigtails), as these increase screen impedance at higher frequencies.
3. **Protection with respect to earth potential between PLC and VLT**
   If the earth potential between the VLT frequency converter and the PLC (etc.) is different, electric noise may occur that will disturb the whole system. This problem can be solved by fitting an equalising cable, to be placed next to the control cable. Minimum cable cross-section: 16 mm^2.
4. **In the event of a 50/60 Hz earth loop**
   If very long control cables are used, 50/60 Hz earth loops can arise, and these can interfere with the whole system. This problem is resolved by attaching one end of the screen to the earth via a 100 nF capacitor (short pin length).

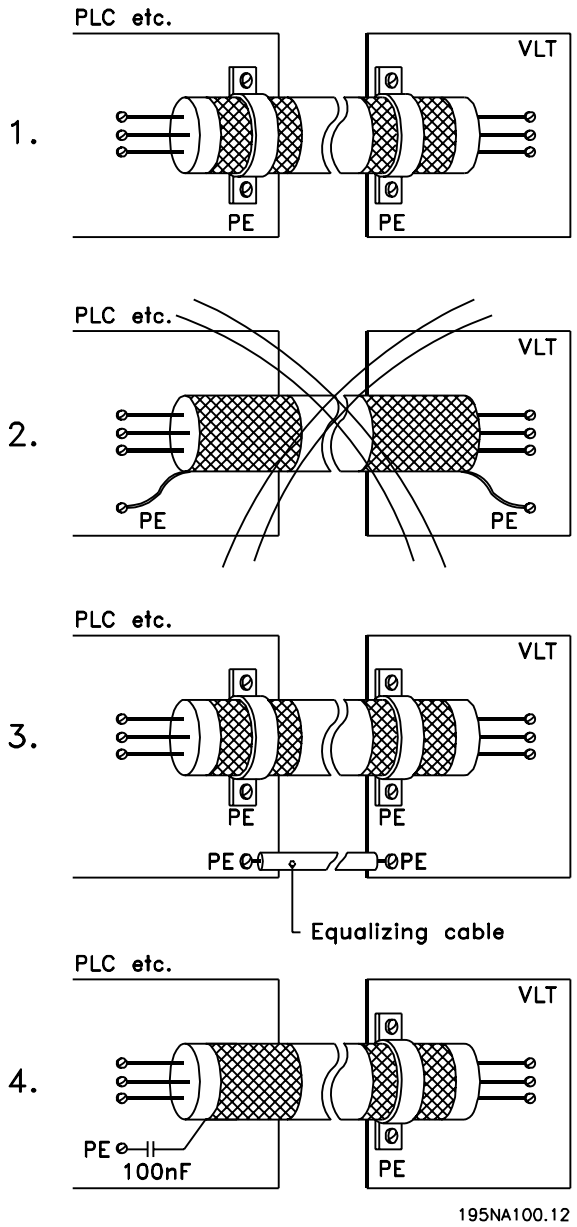

■ Diagram

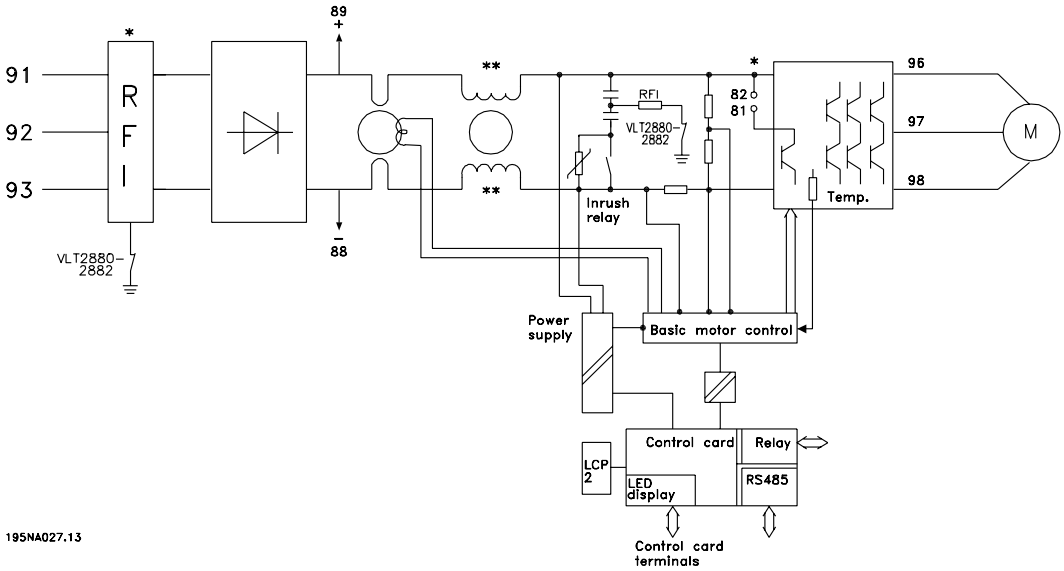

* Integrated 1A RFI filter and brake is an option.
** VLT 2803-2815 200-240 V is not supplied with intermediate circuit coils.

Electrical installation

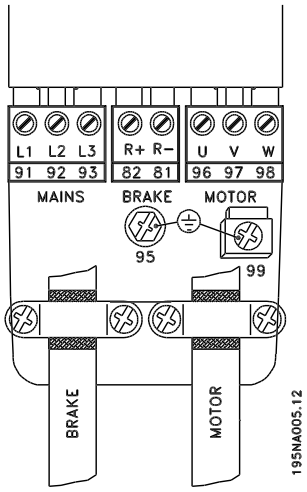

See also the section Brake Connection.

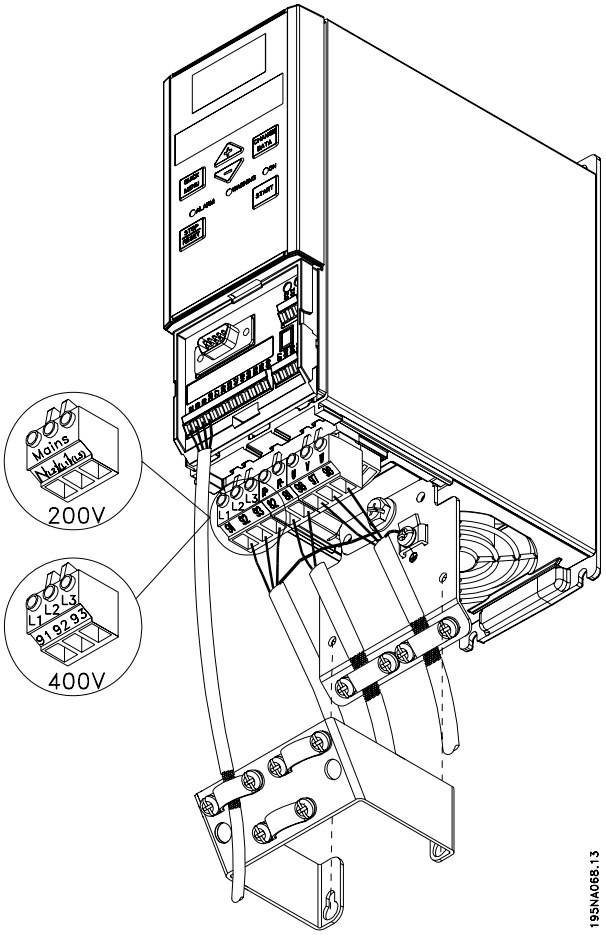

VLT 2803-2815 200-240 V, 2805-2815 380-480 V

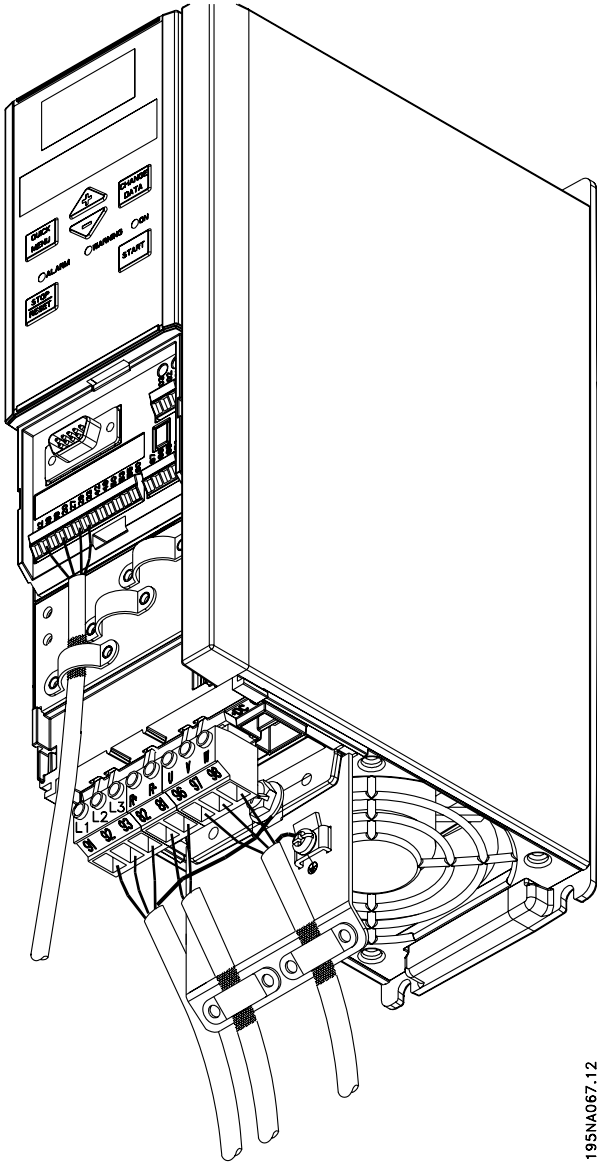

VLT 2822 200-240 V, 2822-2840 380-480 V

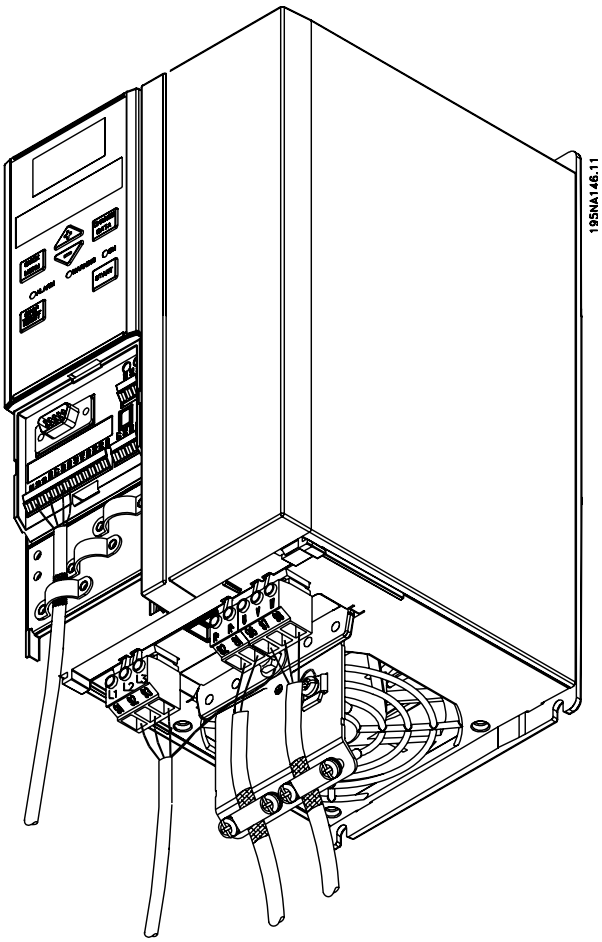

VLT 2840 200-240 V, VLT 2822 PD2, 2855-2875 380-480 V

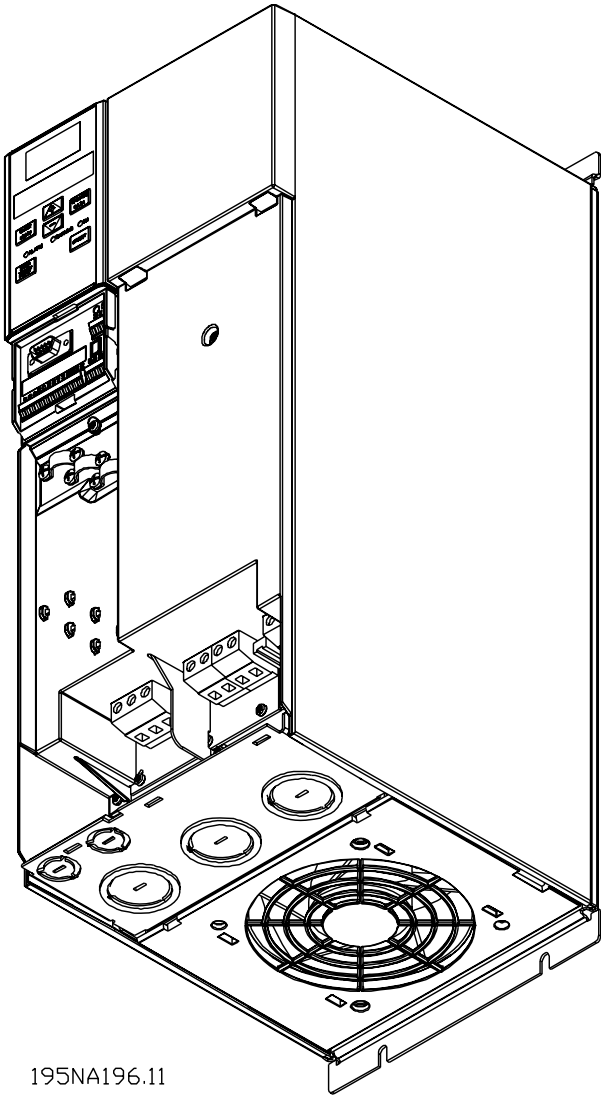

VLT 2880-2882 380-480 V, VLT 2840 PD2

Please note that the units will be supplied with two bottom plates; one for metric glands and one for conduits.

Safety clamp

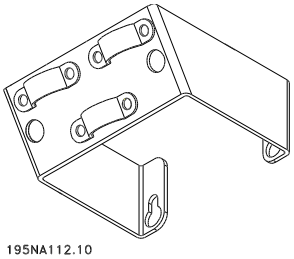

If the galvanic isolation (PELV) between control terminals and high-voltage terminals is to be maintained, the accompanying safety clamp must be fitted to VLT 2803-2815, 200-240 V, and VLT 2805-2815, 380-480 V.

Pre-fuses

For all unit types, external pre-fuses must be fitted in the mains supply to the frequency converter. For UL/cUL applications with a mains voltage of 200-240 Volt, use pre-fuses type Bussmann KTN-R (200-240 Volt) or Ferraz Shawmut type ATMR (max. 30A). For UL/cUL applications with a mains voltage of 380-480 Volt, use pre-fuses type Bussmann KTS-R (380-480 Volt).

Prefuses for UL application /cUL

Alternative fuses 380-500 V drives										
VLT 2800	**Bussmann E52273**	**Bussmann E4273**	**Bussmann E4273**	**Bussmann E4273**	**Bussmann E4273**	**Bussmann E4273**	**SIBA E180276**	**Little Fuse E81895**	**Ferraz-Shawmut E163267/ E2137**	**Ferraz-Shawmut E163267/ E2137**
	RK1/JDDZ	J/JDDZ	T/JDDZ	CC/JDDZ	CC/JDDZ	CC/JDDZ	RK1/JDDZ	RK1/JDDZ	CC/JDDZ	RK1/JDDZ
2805-2820	KTS-R20	JKS-20	JJS-20	FNQ-R-20	KTK-R-20	LP-CC-20	5017906-020	KLS-R20	ATM-R25	A6K-20R
2855-2875	KTS-R25	JKS-25	JJS-25				5017906-025	KLS-R25	ATM-R20	A6K-25R
2880-2882	KTS-R50	JKS-50	JJS-50				5014006-050	KLS-R50	-	A6K-50R
Alternative Fuses 200-240 V drives										
VLT 2800	**Bussmann E52273**	**Bussmann E4273**	**Bussmann E4273**				**SIBA E180276**	**Little Fuse E81895**	**Ferraz-Shawmut E163267/ E2137**	**Ferraz-Shawmut E163267/ E2137**
	RK1/JDDZ	J/JDDZ	T/JDDZ				RK1/JDDZ	RK1/JDDZ	CC/JDDZ	RK1/JDDZ
2803-2822	KTN-R20	JKS-20	JJN-20				5017906-020	KLS-R20	ATM-R25	A6K-20R
2840	KTN-R25	JKS-25	JJN-25				5017906-025	KLS-R25	ATM-R20	A6K-25R

Mains connection

Please note that at 1 x 220-240 Volt the neutral wire must be attached to terminal N $_{(L2)}$ and the phase wire must be connected to terminal L1 $_{(L1)}$.

No.	N$_{(L2)}$ L1$_{(L1)}$ $_{(L3)}$ N L1	Mains voltage 1 x 220-240 V
No.	95	Earth connection

No.	N$_{(L2)}$ L1$_{(L1)}$ $_{(L3)}$ L2 L1 L3	Mains voltage 3 x 220-240 V
No.	95	Earth connection

No.	91 92 93 L1 L2 L3	Mains voltage 3 x 380-480 V
No.	95	Earth connection

NB!
Please check that the mains voltage fits the mains voltage of the frequency converter, which can be seen from the nameplate.

400-Volt units with RFI-filters may not be connected to mains supplies in which the voltage between phase and earth is more than 300 Volts. Please note that for the IT mains and the delta earth the mains voltage can exceed 300 Volts between phase and earth. Units with type code R5 can be connected to mains supplies with up to 400 V between phase and earth.

See *Technical data* for correct dimensioning of cable cross-section. See also the section entitled *Galvanic isolation* for further details.

Motor connection

Connect the motor to terminals 96, 97, 98. Connect earth to terminal 99.

No.	96	97	98	Motor voltage 0-100% of mains voltage.
	U	V	W	3 wires of motor
	U1 W2	V1 U2	W1 V2	6 wires out of motor, Delta connected
	U1	V1	W1	6 wires out of motor, Star connected U2, V2, W2 to be interconnected separely (optional terminal block)
No.	PE			Earth connection

See *Technical data* for correct dimensioning of cable cross-section.

All types of three-phase asynchronous standard motors can be connected to a frequency converter. Normally, small motors are star-connected (230/400 V, Δ/ Y). Large motors are delta-connected (400/690 V, Δ/ Y). The correct connection mode and voltage can be read from the motor nameplate.

NB!
In motors without phase insulation paper, an LC filter should be fitted on the output of the frequency converter.

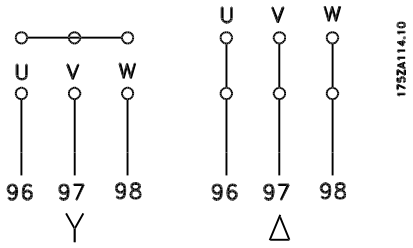

RFI switch

Mains supply isolated from earth:
If the frequency converter is supplied from an isolated mains source (IT mains) or TT/TN-S mains with grounded leg, the RFI switch is recommended to be turned off (OFF). For further reference, see IEC 364-3. In case optimum EMC performance is needed, parallel motors are connected or the motor cable length is above 25 m, it is recommended to set the switch in ON position.
In OFF position, the internal RFI capacities (filter capacitors) between the chassis and the intermediate circuit are cut off to avoid damage to the intermediate circuit and to reduce the earth capacity currents (according to IEC 61800-3).
Please also refer to the application note *VLT on IT mains*, MN.90.CX.02. It is important to use isolation monitors that are capable for use together with power electronics (IEC 61557-8).

NB!
The RFI switch is not to be operated with mains connected to the unit. Check that the mains supply has been disconnected before operating the RFI switch.

NB!
The RFI switch disconnects the capacitors galvanically from ground.

The switch Mk9, placed next to terminal 96, should be removed to disconnect the RFI-filter.
The RFI switch is only available on VLT 2880-2882.

Direction of motor rotation

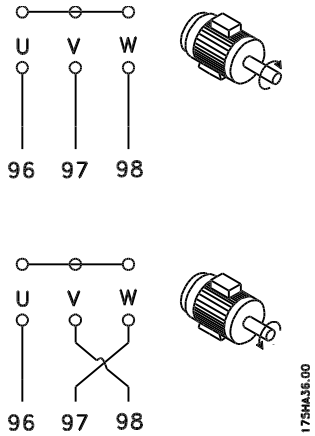

The factory setting is for clockwise rotation with the frequency converter transformer output connected as follows:

Terminal 96 connected to U-phase.

Terminal 97 connected to V-phase.

Terminal 98 connected to W-phase.

The direction of rotation can be changed by switching two phases on the motor terminals.

Parallel connection of motors

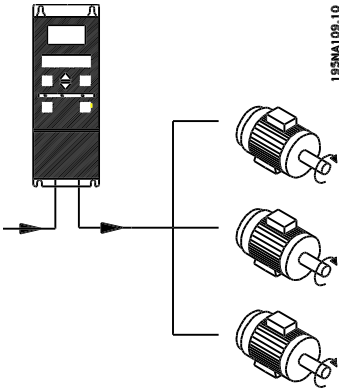

The frequency converter is able to control several motors connected in parallel. If the motors are to have different rpm values, use motors with different rated rpm values. Motor rpm is changed simultaneously, which means that the ratio between the rated rpm values is maintained across the range. The total current consumption of the motors is not to exceed the maximum rated output current I_{INV} for the frequency converter.

Problems may arise at the start and at low rpm values if the motor sizes are widely different. This is because the small motors' relatively high ohmic resistance in the stator calls for a higher voltage at the start and at low rpm values.

In systems with motors connected in parallel, the electronic thermal relay (ETR) of the frequency converter cannot be used as motor protection for the individual motor. For this reason further motor protection must be used, e.g. thermistors in each motor or an individual thermal relay. (Circuit breakers are not suitable as protection).

NB!
Parameter 107 *Automatic motor adaption, AMT* cannot be used when motors are connected in parallel. Parameter 101 *Torque characteristic* must be set to *Special motor characteristics* [8] when motors are connected in parallel.

Motor cables

See Technical data for correct dimensioning of motor cable cross-section and length. Always comply with national and local regulations on cable cross-section.

NB!
If an unscreened/unarmoured cable is used, some EMC requirements are not complied with, see *EMC test results* in the Design Guide.

If the EMC specifications regarding emission are to be complied with, the motor cable must be screened/armoured, unless otherwise stated for the RFI filter in question. It is important to keep the motor cable as short as possible so as to reduce the noise level and leakage currents to a minimum. The motor cable screen must be connected to the metal cabinet of the frequency converter and to the metal cabinet of the motor. The screen connections are to be made with the biggest possible surface area (cable clamp). This is enabled by different installation devices in different frequency converters. Mounting with twisted screen ends (pigtails) is to be avoided, since these spoil the screening effect at high frequencies. If it is necessary to break the screen to install a motor isolator or motor relay, the screen must be continued at the lowest possible HF impedance.

Motor thermal protection

The electronic thermal relay in UL-approved frequency converters has received the UL-approval for single motor protection, when parameter 128 *Motor thermal protection* has been set for *ETR Trip* and parameter 105 *Motor current,* $I_{M,N}$ has been programmed to the rated motor current (see motor nameplate).

Brake connection

No.	81	82	Brake resistor
	R-	R+	terminals

The connection cable to the brake resistor must be screened/armoured. Connect the screen to the metal cabinet of the frequency converter and to the metal cabinet of the brake resistor by means of cable clamps. Dimension the cross-section of the brake cable to match the brake torque.

See the *Design Guide* for dimensioning of brake resistors.

NB!
Please note that voltages up to 850 V DC occur on the terminals.

Earth connection

As leak current to the earth is higher than 3.5 mA, the frequency converter must always be earthed according to prevailing national and local regulations. To guarantee that the earth cable has a good mechanical connection to terminal 95, the cable cross section must be at least 10 mm^2 or 2 rated earth wires that are terminated separately. To increase safety you can install an RCD (Residual Current Device), which guarantees that the frequency converter trips when leak current becomes too high. See also RCD Application Note MN.90.GX.02.

Load sharing

Load sharing provides the facility to connect several frequency converters' DC intermediate circuits. This requires that the installation is extended using extra fuses and AC coils (see drawing below). For load sharing parameter 400 *Brake function* must be set to *Load sharing* [5].

Use 6.3 mm Faston Plugs for DC (Load Sharing). Contact Danfoss or see instructions no. MI.50.NX.02 for further information.

No.	88	89	Loadsharing
	-	+	

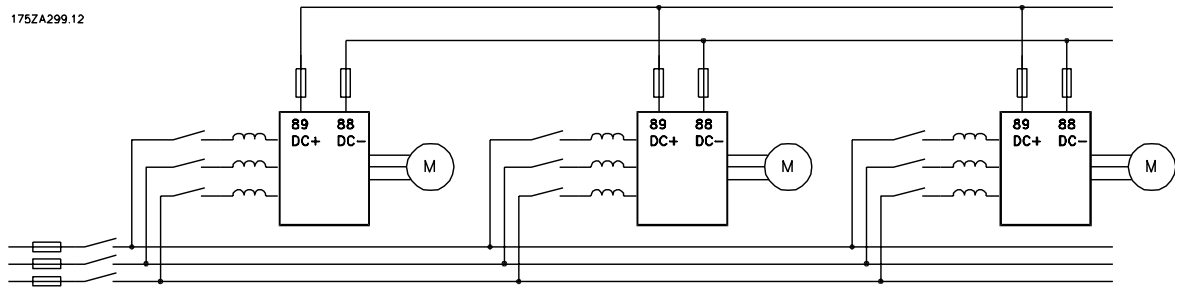

Note that voltage levels of up to 850 V DC may occur between terminals 88 and 89.

Tightening Torque, Power Terminals

Power and earth terminals must be tightened with the following torques:

VLT	Terminals	Torque [Nm]
2803-2875	Power mains brake	0.5-0.6
	Earth	2-3
2880-2882, 2840 PD2	Power mains brake	1.2-1.5
	Earth	2-3

Control of mechanical brake

In lifting/lowering applications you need to be able to control an electromagnetic brake. The brake is controlled using a relay output or digital output (terminal 46). The output must be kept closed (voltage-free) for the period of time during which the frequency converter is not able to 'support' the motor, for example due to the load being too great. Select *Mechanical brake control* in parameter 323 or 341 for applications with an electromagnetic brake.

When the output frequency exceeds the brake cut out value set in par. 138, the brake is released if the motor current exceeds the preset value in parameter 140. The brake is engaged when the output frequency is less than the brake engaging frequency, which is set in par. 139.

If the frequency converter is placed at alarm status or in an overvoltage situation the mechanical brake is cut in immediately.

NB!
This application is only for lifting/lowering without a counterbalance.

Access to control terminals

All terminals to the control cables are located underneath the protective plate on the front of the frequency converter. Remove the protective plate by pulling it downwards (see drawing).

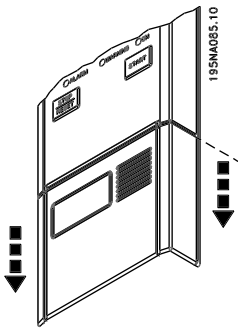

■ Electrical installation, control cables

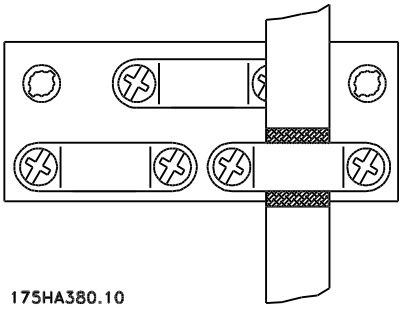

Control cables must be screened/armoured. The screen must be connected to the frequency converter chassis by means of a clamp. Normally, the screen must also be connected to the chassis of the controlling unit (use the instructions for the unit in question). In connection with very long control cables and analogue signals, in rare cases depending on the installation, 50/60 Hz earth loops may occur because of noise transmitted from mains supply cables. In this connection, it may be necessary to break the screen and possibly insert a 100 nF capacitor between the screen and the chassis.

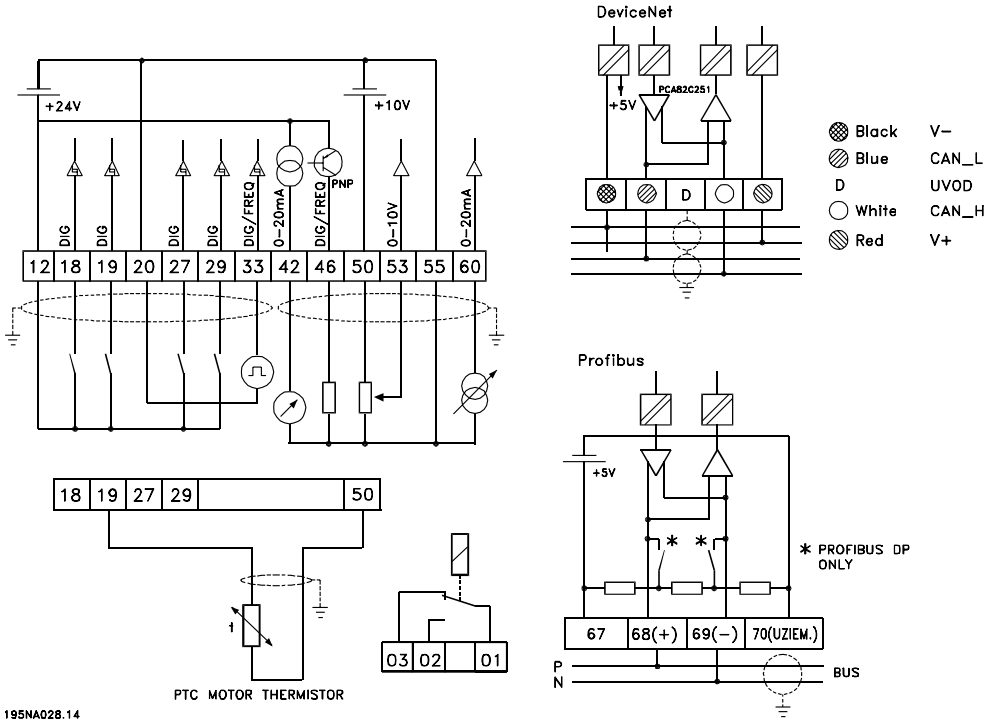

Tightening torques, control cables

Control wires must be connected with a tightening torque of 0.22-0.25 Nm.

Electrical installation, control terminals

See section entitled *Earthing of screened/armoured control cables* in the VLT 2800 Design Guide for the correct termination of control cables.

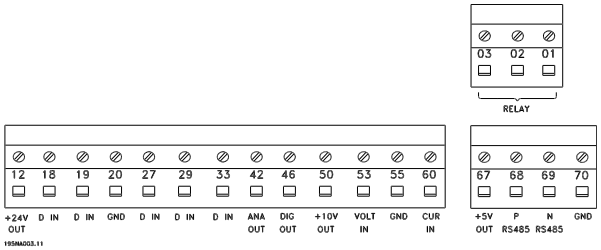

No.	Function
01-03	Relay outputs 01-03 can be used for indicating status and alarms/warnings.
12	24 V DC voltage supply.
18-33	Digital inputs.
20, 55	Common frame for input and output terminals.
42	Analog output for displaying frequency, reference, current or torque.
46[1]	Digital output for displaying status, warnings or alarms, as well as frequency output.
50	+10 V DC supply voltage for potentiometer or thermistor.
53	Analogue voltage input 0 - 10 V DC.
60	Analogue current input 0/4 - 20 mA.
67[1]	+ 5 V DC supply voltage to Profibus.
68, 69[1]	RS 485, Serial communication.
70[1]	Frame for terminals 67, 68 and 69. Normally this terminal is not to be used.

1. The terminals are not valid for DeviceNet/CANopen. See also the DeviceNet manual, MG.90.BX.YY for further details.

Relay connection

See parameter 323 *Relay output* for programming of relay output.

Nr.		
	01 - 02	1 - 2 make (normally open)
	01 - 03	1 - 3 break (normally closed)

NB!
Please note that the cable jacket for the relay must cover the first row of control card terminals - otherwise the galvanic isolation (PELV) cannot be maintained. Max. cable diameter: 4 mm. See drawing.

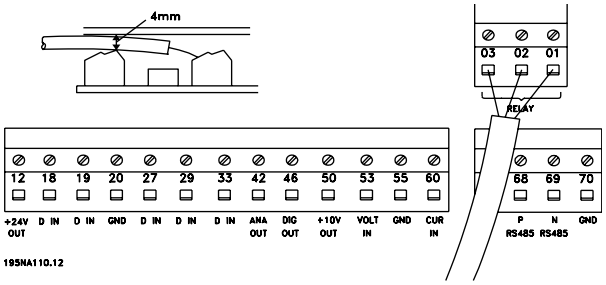

Switches 1-4

The dip switch is only on the control card with Profibus DP communication.
The switch position shown is the factory setting.

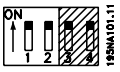

Switches 1 and 2 are used as cable termination for the RS 485 interface. If the frequency converter is located as the first or last unit in the bus SYSTEM, switches 1 and 2 must be ON. On the remaining frequency converters, switches 1 and 2 must be OFF.
Switches 3 and 4 are not applied.

VLT Software Dialog

Connection to terminals 68-70 or
Sub D:

- PIN 3 GND
- PIN 8 P-RS 485
- PIN 9 N-RS 485

Sub D plug

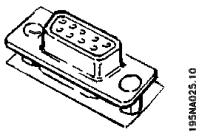

An LCP 2 control unit can be connected to the Sub D plug on the control card. Ordering number: 175N0131. LCP control unit with ordering number 175Z0401 is not to be connected.

Connection examples

Start/stop

Start/stop using terminal 18 and coasting stop using terminal 27.

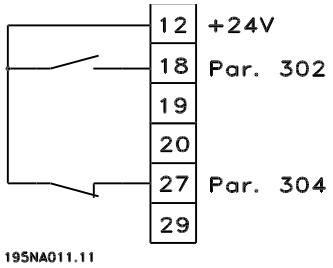

Par. 302 *Digital input* = *Start* [7]

Par. 304 *Digital input* = *Coasting stop inverted* [2]

For Precise start/stop the following settings are made:

Par. 302 *Digital input* = *Precise start/stop* [27]

Par. 304 *Digital input* = *Coasting stop inverted* [2]

Pulse start/stop

Pulse start using terminal 18 and pulse stop using terminal 19. In addition, the jog frequency is activated via terminal 29.

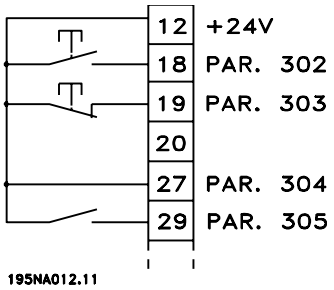

Par. 302 *Digital input* = *Pulse start* [8]

Par. 303 *Digital input* = *Stop inverted* [6]

Par. 304 *Digital input* = *Coasting stop inverted* [2]

Par. 305 *Digital input* = *Jog* [13]

Speed up/down

Speed up/down using terminals 29/33.

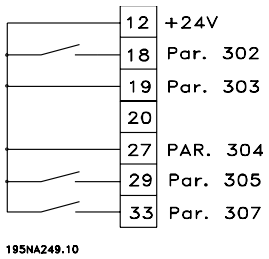

Par. 302 *Digital input* = *Start* [7]

Par. 303 *Digital input* = *Freeze reference* [14]

Par. 305 *Digital input* = *Speed up* [16]

Par. 307 *Digital input* = *Speed down* [17]

Potentiometer reference

Voltage reference via a potentiometer.

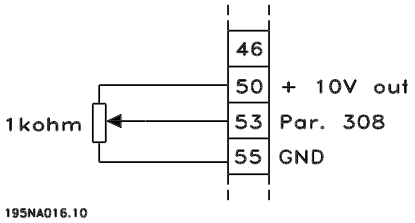

Par. 308 *Analog input* = *Reference* [1]

Par. 309 *Terminal 53, min. scaling* = 0 Volt

Par. 310 *Terminal 53, max. scaling* = 10 Volt

Connection of a 2-wire transmitter

Connection of a 2-wire transmitter as feedback to terminal 60.

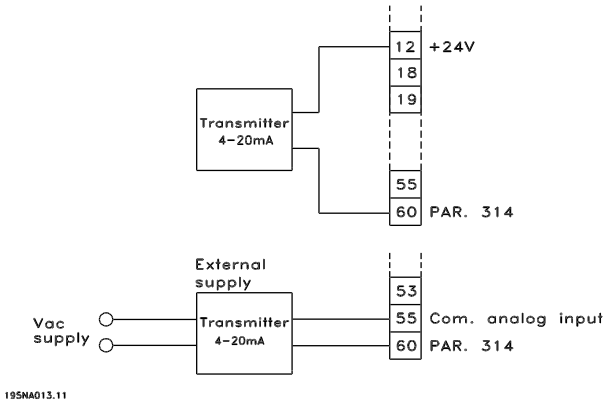

Par. 314 *Analog input* = *Feedback* [2]

Par. 315 *Terminal 60, min. scaling* = 4 mA

Par. 316 *Terminal 60, max. scaling* = 20 mA

4-20 mA reference

4-20 mA reference on terminal 60 and speed feedback signal on terminal 53.

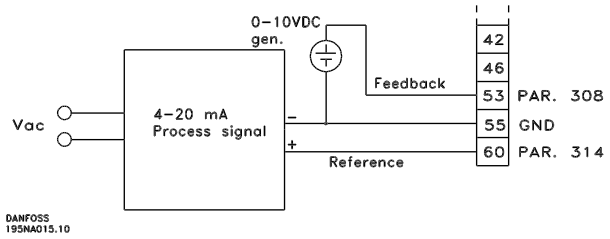

Par. 100 *Configuration* = *Speed closed loop* [1]

Par. 308 *Analog input* = *Feedback* [2]

Par. 309 *Terminal 53, min. scaling* = 0 Volt

Par. 310 *Terminal 53, max. scaling* = 10 Volt

Par. 314 *Analog input* = *Reference* [1]

Par. 309 *Terminal 60, min. scaling* = 4 mA

Par. 310 *Teminal 60, max. scaling* = 20 mA

50 Hz counter-clockwise to 50 Hz clockwise

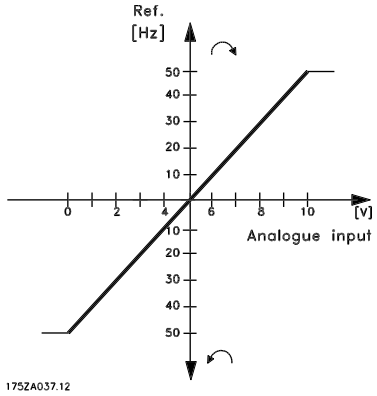

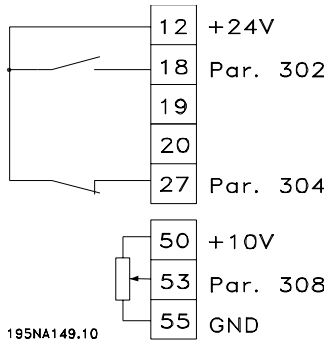

Par. 100 *Configuration* = *Speed regulation open loop* [0]

Par. 200 *Output frequency range* = *Both directions, 0-132 Hz* [1]

Par. 203 *Reference range* = *Min. ref. - Max. ref.* [0]

Par. 204 *Min. reference* = - 50 Hz

Par. 205 *Max. reference* = 50 Hz

Par. 302 *Digital input* = *Start* [7]

Par. 304 *Digital input* = *Coasting stop inverted* [2]

Par. 308 *Analogue input* = *Reference* [1]

Par. 309 *Terminal 53, min. scaling* = 0 Volt

Par. 310 *Terminal 53, max. scaling* = 10 Volt

Preset references

Switch between 8 preset references via two digital inputs and Setup 1 and Setup 2.

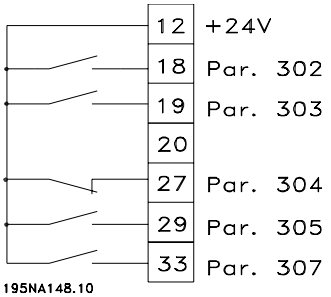

Par. 004 *Active Setup* = *Multisetup 1* [5]

Par. 204 *Min. reference* = 0 Hz

Par. 205 *Max. reference* = 50 Hz

Par. 302 *Digital input* = *Start* [7]

Par. 303 *Digital input* = Choice of Setup, lsb [31]

Par. 304 *Digital input* = *Coasting stop inverted* [2]

Par. 305 *Digital input* = Preset ref., lsb [22]

Par. 307 *Digital input* = Preset ref., msb [23]

Setup 1 contains the following preset references:

Par. 215 *Preset reference 1* = 5.00%

Par. 216 *Preset reference 2* = 10.00%

Par. 217 *Preset reference 3* = 25.00%

Par. 218 *Preset reference 4* = 35.00%

Setup 2 contains the following preset references:

Par. 215 *Preset reference 1* = 40.00%

Par. 216 *Preset reference 2* = 50.00%

Par. 217 *Preset reference 3* = 70.00%

Par. 218 *Preset reference 4* = 100.00%

This table shows what the output frequency is:

Preset ref., msb	Preset ref., lsb	Selection of Setup	Output frequency [Hz]
0	0	0	2.5
0	1	0	5
1	0	0	10
1	1	0	17.5
0	0	1	20
0	1	1	25
1	0	1	35
1	1	1	50

Connection of mechanical brake

Use of the relay for 230V AC brake

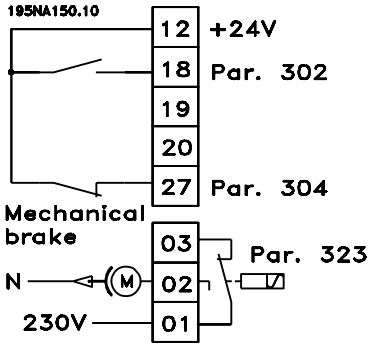

Par. 302 *Digital input = Start* [7]

Par. 304 *Digital input = Coasting stop inverted* [2]

Par. 323 *Relay output = Mechanical brake control* [25]

Mechanical brake control [25] = '0' => Brake is closed.
Mechanical brake control [25] = '1' => The brake is open.
See more detailed parameter settings under *Control of mechanical brake* .

NB!
Do not use the internal relay for DC brakes or brake voltages > 250 V.

Counter stop via terminal 33

The start signal (terminal 18) must be active, i.e. logical '1', until the output frequency is equal to the reference. The start signal (terminal 18 = logical '0') must then be removed before the counter value in parameter 344 has managed to stop the VLT frequency converter.

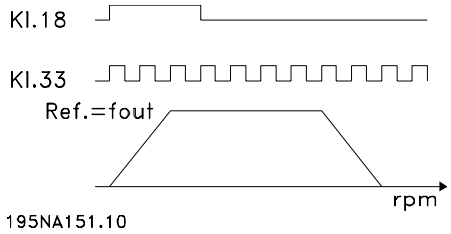

Par. 307 *Digital input = Pulse input* [30]

Par. 343 *Precise stop function = Counter stop with reset* [1]

Par. 344 *Counter value* = 100000

Use of internal PID-controller - closed loop process control

1. Connect the frequency converter to mains and motor cables as usual.
2. Connect transmitter (feedback signal) to + terminal 12 and - terminal 60 (applies to 2-wire transmitters 4-20 mA). (Connect transmitters with 0-10 V DC to + terminal 53 and - terminal 55).

NB!
Connect terminal 55 as - and terminal 60 as + for current signal (0/4-20 mA) and terminal 53-55 for voltage signal (0-10 V DC) if transmitters with separate voltage supply are used.

3. Connect the start signal between terminal 12 and 18, 12-27 must be connected or set to no function (parameter 304 = 0).
4. Set all parameters in the Quick Menu and enter the Main Menu (to enter the Main Menu: Press Quick Menu and + simultaneously).
5. Set the following parameters:

   100 = Process controller closed loop [3]

101 = Variable torque medium [3]

If used with centrifugal pumps and fans.

308 = Feedback [2] (for 0-10 V DC transmitters) or

314 = Feedback [2] (for 4-20 mA transmitters)

414 = Minimum feedback scaling, must be set to the minimum feedback value

415 = Maximum feedback scaling, must be set to the maximum feedback value

Example: Pressure transmitter 0-10 bar: 414 = 0 and 415 = 10

416 = Process units: As shown on the local control panel (example: bar [4])

437 = Normal [0]: The output frequency should be reduced when the feedback signal increases
Inverse [1]: The output frequency should increase when the feedback signal increases

440 = Proportional gain (P-gain) 0.3-1.0 (experienced value)

441 = Integration time (I-time) 3-10 sec. (experienced value)

442 = Differentiation time (D-time) 0-10 sec. (experienced value)

205 = Max. reference is to be set equal to parameter 415 (example: 10 bar)

215 = Preset reference 1. Set the preset reference to the wanted min. reference value (example: 5 bar)

(Parameter 205 and 215 are shown in the process unit chosen in parameter 416).

The value in brackets [ ] are data values corresponding to the wanted function. Example: Parameter 308 Feedback signal = [2]

If the motor is supposed to always run at a minimum speed, a such can be selected in parameter 204 = output frequency low limit. (For pump works it is typically 15-20 Hz).

With the above connections and settings all normal pump and fan applications will work properly. In certain cases it might be necessary to optimize the PID-controllerr (parameter 440, 441 and 442) beyond the mentioned experienced values.

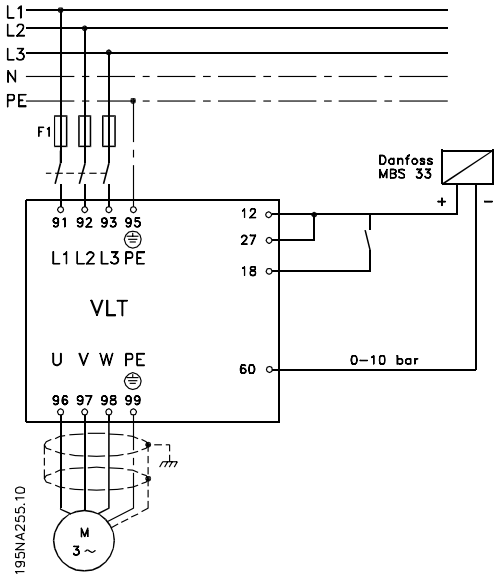

Operation & Display

001	Language
	(language)

Value:

✯ English (english)	[0]
German (deutsch)	[1]
French (francais)	[2]
Danish (dansk)	[3]
Spanish (espanol)	[4]
Italian (italiano)	[5]

Function:

This parameter is used to choose the language to be shown in the display whenever the LCP control unit is connected.

Description of choice:

There is a choice of the languages shown. The factory setting may vary.

002	Local/remote operation
	(OPERATION SITE)

Value:

✯ Remote operation (REMOTE)	[0]
Local operation (LOCAL)	[1]

Function:

There is a choice of two different modes of operation of the frequency converter; *Remote operation* [0] or *Local operation* [1]. See also parameter 013 *Local control* if *Local operation* [1] is selected.

Description of choice:

If *Remote operation* [0] is selected, the frequency converter is controlled via:

1. the control terminals or via serial communication.
2. the [START] key. This cannot, however, override stop commands transmitted via the digital inputs or via serial communication.
3. the [STOP/RESET] and [JOG] keys, on the condition that these are active.

If *Local operation* [1], is selected, the frequency converter is controlled via:

1. the [START] key. This cannot, however, override stop commands via the digital inputs (see parameter 013 *Local control*).
2. the [STOP/RESET] and [JOG] keys, on the condition that these are active.
3. the [FWD/REV] key, on the condition that is has been selected as active in parameter 016 *Local reversing*, and that parameter 013 *Local control* is set at *Local control and open loop* [1] or *Local control as parameter 100* [3]. Parameter 200 *Output frequency range* is set at *Both directions*.
4. parameter 003 *Local reference* where the reference can be set using the [+] and [-] keys.
5. an external control command that can be connected to the digital inputs (see parameter 013 *Local control*).

NB!
The [JOG] and [FWD/REV] keys are located on the LCP control unit.

003	Local reference
	(LOCAL REFERENCE)

Value:

Par. 013 *Local control* must be set to [1] or [2]:
0 - f_{MAX} (par. 205) ✯ 50 Hz
Par. 013 *Local control* must be set to [3] or [4].
Ref_{MIN} - Ref_{MAX} (par. 204-205) ✯ 0,0

Function:

In this parameter, the local reference can be set manually. The unit of the local reference depends on the configuration selected in parameter 100 *Configuration*.

Description of choice:

In order to protect the local reference, parameter 002 *Local/remote operation* must be set to *Local operation* [1]. Local reference cannot be set via serial communication.

Programming

✯ = factory setting, () = display text, [] = value for use in communication via serial communication port

Setup configuration

There is a choice of four Setups (parameter Setups), which can be programmed independently of one another. The active Setup can be selected in parameter 004 *Active Setup*. When an LCP 2 control unit is connected, the active Setup number will be appear in the display under “Setup”. It is also possible to preset the frequency converter to *Multisetup*, so that it is possible to shift Setups using the digital inputs or serial communication. Setup shift can be used in a plant in which, for example, one Setup is used for daytime operation and another one at night time.In parameter 006 *Setup copying* it is possible to copy from one Setup to another. Using parameter 007 *LCP copy* all Setups can be transferred from one frequency converter to another by moving the LCP 2 control panel. First all parameter values are copied to the LCP 2 control panel, which can then be moved to another frequency converter. Here all parameter values can be copied from the LCP 2 control unit to the frequency converter.

Setup shift

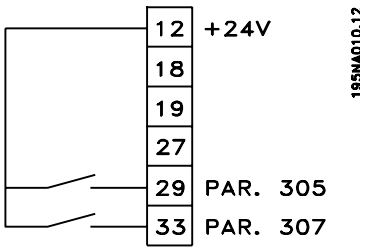

- Selection of Setup via terminals 29 and 33.

  Par. 305 *Digital input = Selection of Setup, lsb* [31]

  Par. 307 *Digital input = Selection of Setup, msb* [32]

  Par. 004 *Active setup = Multi Setup* [5]

004	Active Setup (active Setup)	
Value:		
	Factory Setup (FACTORY SETUP)	[0]
☆	Setup 1 (setup 1)	[1]
	Setup 2 (setup 2)	[2]
	Setup 3 (setup 3)	[3]
	Setup 4 (setup 4)	[4]
	Multi Setup (MULTI SETUP)	[5]

Function:

The active parameter Setup is selected here. All parameters can be programmed in four individual parameter Setups. Shifts between Setups can be made in this parameter via a digital input or via serial communication.

Description of choice:

Factory Setup [0] contains the factory-set parameter values. *Setup 1-4* [1]-[4] are four individual Setups which can be selected as required. *Multi Setup* [5] is used where remote-controlled shifts between the four Setups via a digital input or via serial communication is required.

005	Programming Setup (EDIT SETUP)	
Value:		
	Factory Setup (FACTORY SETUP)	[0]
	Setup 1 (setup 1)	[1]
	Setup 2 (setup 2)	[2]
	Setup 3 (setup 3)	[3]
	Setup 4 (setup 4)	[4]
☆	Active Setup (ACTIVE SETUP)	[5]

Function:

You can select which Setup you want to programme during operation (applies both via the control panel and the serial communication port). It is, for example, possible to programme *Setup 2* [2], while the active Setup is set to *Setup 1* [1] in parameter 004 *Active Setup* .

Description of choice:

Factory Setup [0] contains the factory-set data and can be used as a source of data if the other Setups are to be reset to a known status. *Setup 1-4* [1]-[4] are individual Setups that can be programmed freely during operation. If *Active Setup* [5] is selected, the programming Setup will be equal to parameter 004 *Active Setup*.

NB!
If data is modified or copied to the active Setup, the modifications have an immediate effect on the unit's operation.

☆ = factory setting, () = display text, [] = value for use in communication via serial communication port

006 Setup copying
(SETUP COPY)

Value:

★ No copying (NO COPY)	[0]
Copy to Setup 1 from # (COPY TO SETUP 1)	[1]
Copy to Setup 2 from # (COPY TO SETUP 2)	[2]
Copy to Setup 3 from # (COPY TO SETUP 3)	[3]
Copy to Setup 4 from # (COPY TO SETUP 4)	[4]
Copy to all Setups from # (copy to all)	[5]

Function:

You can copy from the selected active Setup in parameter 005 *Programming setup* to the selected Setup or Setups in this parameter.

NB!
Copying is only possible in Stop (motor stopped in connection with a stop command).

Description of choice:

Copying begins when the required copying function has been selected and the [OK]/[CHANGE DATA] key has been pushed. The display indicates when copying is in progress.

007 LCP copy
(LCP COPY)

Value:

★ No copying (NO COPY)	[0]
Upload all parameters (UPL. ALL PAR.)	[1]
Download all parameters (DWNL. ALL PAR.)	[2]
Download size-independent parameters (DWNL.OUTPIND.PAR.)	[3]

Function:

Parameter 007 *LCP copy* is used if you want to use the LCP 2 control panel's integral copy function. The function is used if you want to copy all parameter setups from one frequency converter to another by moving the LCP 2 control panel.

Description of choice:

Select *Upload all parameters* [1] if you want all parameter values to be transferred to the control panel. Select *Download all parameters* [2] if all parameter values transferred are to be copied to the frequency converter to which the control panel is attached. Select *Download size-independent par.* [3] if you only want to downloade the size-independent parameters. This is used when downloading to a frequency converter with a different rated power size than that from which the parameter setup originates.

NB!
Upload/download can only be performed in stop mode. Download can only be performed to a frequency converter with the same software version number, see parameter 626 *Database identification no.*

008 Display scaling of output frequency
(FREQUENCY SCALE)

Value:

0.01 - 100.00 ★ 1.00

Function:

In this parameter, the factor is selected by which the output frequency is to be multiplied. The value is shown in the display, provided parameters 009-012 *Display readout* have been set to *Output frequency x scaling* [5].

Description of choice:

Set the required scaling factor.

009 Large display readout
(DISPLAY LINE 2)

Value:

No readout (none)	[0]
Resulting reference [%] (reference [%])	[1]
Resulting reference [unit] (reference [unit])	[2]
Feedback [unit] (feedback [unit])	[3]
★ Frequency [Hz] (Frequency [Hz])	[4]
Output frequency x scaling (frequency x scale)	[5]
Motor current [A] (Motor current [A])	[6]
Torque [%] (Torque [%])	[7]
Power [kW] (Power [kW])	[8]
Power [HP] (Power [HP][US])	[9]
Motor voltage [V]	[11]

Programming

★ = factory setting, () = display text, [] = value for use in communication via serial communication port

(Motor voltage [V])	
DC link voltage [V] (DC link voltage [V])	[12]
Thermal load motor [%] (Motor thermal [%])	[13]
Thermal load [%] (FC. thermal[%])	[14]
Running hours [Hours] (RUNNING HOURS])	[15]
Digital input [Bin] (Digital input[bin])	[16]
Analog input 53 [V] (analog input 53 [V])	[17]
Analog input 60 [mA] (analog input 60 [mA])	[19]
Pulse reference [Hz] (Pulse ref. [Hz])	[20]
External reference [%] (external ref. [%])	[21]
Status word [Hex] (Status word [hex])	[22]
Heatsink temperature [°C] (Heatsink temp [°C])	[25]
Alarm word [Hex] (Alarm word [hex])	[26]
Control word [Hex] (Control word [Hex])	[27]
Warning word [Hex] (warning word [Hex])	[28]
Extended status word [Hex] (Ext. status [hex])	[29]
Communication option card warning (COMM OPT WARN [HEX])	[30]
Pulse count (PULSE COUNTER)	[31]
Power [W] (POWER [W])	[32]

Function:

In this parameter you can select the data value that you wish to display in the LCP 2 control unit display line 2 when the frequency converter is switched on. The display will also be included in the scrollbar in display mode. In parameters 010-012 *Display readout* you can select a further three data values, which are displayed in display line 1.

Description of choice:

No readout can only be selected in parameters 010-012 *Small display readout*.

Resulting reference [%] gives, as a percentage, the resulting reference in the range from Minimum reference, Ref_{MIN} to Maximum reference, Ref_{MAX}.

Reference [unit] gives the resulting reference with unit Hz in *Open loop*. In *Closed loop* the reference unit is selected in parameter 416 *Process units*.

Feedback [unit] gives the resulting signal value using the unit/scaling selected in parameter 414 *Minimum feedback, FB_{LOW}*, 415 *Maximum feedback, FB_{HIGH}* and 416 *Process units*.

Frequency [Hz] gives the output frequency of the frequency converter.

Output frequency x scaling [-] equals the present output frequency f_M multiplied by the factor set in parameter 008 *Display scaling of output frequency* .

Motor current [A] gives the phase current of the motor measured as an effective value.

Torque [%] denotes the motor's present load in relation to the motor's rated torque.

Power [kW] gives the present power that the motor is absorbing in kW.

Power [HP] gives the present power that the motor is absorbing in HP.

Motor voltage[V] gives the voltage supplied to the motor.

DC link voltage [V] gives the intermediate circuit voltage of the frequency converter.

Thermal load motor [%] gives the calculated/estimated load on the motor. 100 % is the cut-out limit.

Thermal load [%] gives the calculated/estimated thermal load on the frequency converter. 100 % is the cut-out limit.

Running hours [Hours] gives the number of hours that the motor has tun since the last reset in parameter 619 *Reset of running hours counter*.

Digital input [Binary code] gives the signal status from the 5 digital inputs (18, 19, 27, 29 and 33). Terminal 18 corresponds to the bit on the extreme left. `0' = no signal, `1' = signal connected.

Analog input 53 [V] gives the voltage value of terminal 53.

Analog input 60 [mA] gives the present value of terminal 60.

Pulse reference [Hz] gives the reference in Hz connected to terminal 33.

External reference [%] gives the sum of external references as a percentage (sum of analogue/pulse/serial communication) in the range from Minimum reference, Ref_{MIN} to Maximum reference, Ref_{MAX}.

★ = factory setting, () = display text, [] = value for use in communication via serial communication port

Status word [Hex] gives one or several status conditions in a Hex code. See *Serial communication* in the *Design Guide* for further information.

Heatsink temp.[°C] gives the present heatsink temperature of the frequency converter. The cut-out limit is 90-100°C, while cutting back in occurs at 70 ± 5°C.

Alarm word [Hex] gives one or several alarms in hex code. See *Serial communication* in the *Design Guide* for further information.

Control word [Hex] gives the control word for the frequency converter. See *Serial communication* in the *Design Guide* for further information.

Warning word [Hex] gives one or several warnings in hex code. See *Serial communication* in the *Design Guide* for further information.

Extended status word [Hex] gives one or several status modes in Hex code. See *Serial communication* in the *Design Guide* for further information.

Communication option card warning [Hex] gives a warning word if there is a fault in the communication bus. Only active if communication options are installed.
If there are no communication options 0 Hex is displayed.

Pulse count gives the number of pulses that the unit has registered.

Power [W] gives the present power that the motor is absorbing in W.

---

010 Small display line 1.1
(DISPLAY LINE 1.1)

Value:

See par. 009 *Large display readout* ★ Analog input 53 [V] [17]

Function:

In this parameter, the first of three data values can be selected that is to be displayed in the LCP control unit display, line 1, position 1. This is a useful function, e.g. when setting the PID regulator, as it gives a view of process reactions to reference changes. The display readout is activated by pushing the [DISPLAY STATUS] key.

Description of choice:

See parameter 009 *Large display readout*.

---

011 Small display readout 1.2
(DISPLAY LINE 1.2)

Value:

See parameter 009 *Large display readout* ★ Motor current [A][6]

Function:

See the functional description given under parameter 010 *Small display readout*.

Description of choice:

See parameter 009 *Large display readout*.

---

012 Small display readout 1.3
(DISPLAY LINE 1.3)

Value:

See parameter 009 *Large display readout* ★ Feedback [unit] [3]

Function:

See the functional description given under parameter 010 *Small display readout*.

Description of choice:

See parameter 009 *Large display readout*.

---

013 Local control
(LOC CTRL/CONFIG.)

Value:

Local not active (DISABLE) [0]
Local control and open loop without slip compensation
(LOC CTRL/OPEN LOOP) [1]
Remote-operated control and open loop without slip compensation
(LOC+DIG CTRL) [2]
Local control as parameter 100
(LOC CTRL/AS P100) [3]
★ Remote-operated control as parameter 100
(LOC+DIG CTRL/AS P100) [4]

Function:

This is where the required function is selected if, in parameter 002 *Local/remote operation, Local operation* [1] has been chosen.

Description of choice:

If *Local not active* [0] is selected, it is not possible to set a reference via parameter 003 *Local reference*.

Programming

★ = factory setting, () = display text, [] = value for use in communication via serial communication port

In order to enable a shift to *Local not active* [0], parameter 002 *Local/remote operation* must be set to *Remote operation* [0].

Local control and open loop [1] is used if the motor speed is to be set via parameter 003 *Local reference*. When this choice is made, parameter 100 *Configuration* automatically shifts to *Speed regulation, open loop* [0].

Remote-operated control and open loop [2] functions in the same way as *Local control and open loop* [1]; however, the frequency converter can also be controlled via the digital inputs.

For selections [1-2] control is shifted to open loop, no slip compensation.

Local control as parameter 100 [3] is used when the motor speed is to be set via parameter 003 *Local reference*, but without parameter 100 *Configuration* automatically shifting to *Speed regulation, open loop* [0].

Remote-operated control as parameter 100 [4] works the same way as *Local control as parameter 100* [3]; however, the frequency converter can also be controlled via the digital inputs.

Shifting from *Remote operation* to *Local operation* in parameter 002 *Local/remote operation*, while this parameter has been set to *Remote-operated control and open loop* [1]: The present motor frequency and direction of rotation will be maintained. If the present direction of rotation does not respond to the reversing signal (negative reference), the reference will be set to 0.

Shifting from *Local operation* to *Remote operation* in parameter 002 *Local/remote control*, while this parameter has been set to *Remote-operated control and open loop* [1]: The configuration selected in parameter 100 *Configuration* will be active. The shift will be smooth.

Shifting from *Remote control* to *Local control* in parameter 002 *Local/remote operation*, while this parameter has been set to *Remote-operated control as parameter 100* [4]: the present reference will be maintained. If the reference signal is negative, the local reference will be set to 0.

Shifting from *Local operation* to *Remote operation* in parameter 002 *Local/remote operation*, while this parameter has been set to *Remote operation*: The local reference will be replaced by the remote-operated reference signal.

---

014 Local stop (LOCAL STOP)

Value:

Not active (DISABLE)	[0]
★ Active (ENABLE)	[1]

Function:

In this parameter, the local [STOP]-key can be engaged or disengaged on the control panel and on the LCP control panel.

Description of choice:

If *Not active* [0] is selected in this parameter, the [STOP]-key will be inactive.

NB!
If *Not active* [0] is selected, the motor cannot be stopped by means of the [STOP]-key.

---

015 Local jog (LOCAL JOGGING)

Value:

★ Not active (DISABLE)	[0]
Active (ENABLE)	[1]

Function:

In this parameter, the jog function on the LCP control panel can be engaged/disengaged.

Description of choice:

If *Not active* [0] is selected in this parameter, the [JOG]-key will be inactive.

★ = factory setting, () = display text, [] = value for use in communication via serial communication port

016 Local reversing
(LOCAL REVERSING)

Value:

★ Not active (DISABLE)	[0]
Active (ENABLE)	[1]

Function:

In this parameter you can select/deselect the reversing function on the LCP control panel. The key can only be used if parameter 002 *Local/remote operation* is set to *Local operation* [1] and parameter 013 *Localcontrol* to *Local control, open loop* [1] or *Local control as parameter 100* [3].

Description of choice:

If *Disable* [0] is selected in this parameter, the [FWD/REV] key will be disabled. See also parameter 200 *Output frequency range*.

---

017 Local reset of trip
(LOCAL RESET)

Value:

Not active (DISABLE)	[0]
★ Active (ENABLE)	[1]

Function:

In this parameter, the reset function on the control panel can be engaged/disengaged.

Description of choice:

If *Not active* [0] is selected in this parameter, the reset function will be inactive.

NB!
Select *Not active* [0], only if an external reset signal has been connected via the digital inputs.

---

018 Lock for data changes
(DATA CHANGE LOCK)

Value:

★ Not locked (NOT LOCKED)	[0]
Locked (LOCKED)	[1]

Function:

In this parameter, it is possible to 'lock' the controls to disable data changes via the control keys.

Description of choice:

If *Locked* [1] is selected, data changes in the parameters cannot be made; however, it will still be possible to make data changes via serial communication. Parameter 009-012 *Display readout* can be changed via the control panel.

---

019 Operating mode at power-up, local operation
(POWER UP ACTION)

Value:

Auto restart, use saved reference (AUTO RESTART)	[0]
★ Forced stop, use saved reference (LOCAL=STOP)	[1]
Forced stop, set ref. to 0 (LOCAL=STOP, REF=0)	[2]

Function:

Setting of the required operating mode when the mains voltage is engaged. This function can only be active if *Local operation* [1] has been selected in parameter 002 *Local/remote operation*.

Description of choice:

Auto restart, use saved ref. [0] is selected if the frequency converter is to start using the local reference (set in parameter 003 *Local reference*) and the start/stop state given via the control keys immediately prior to the mains voltage being cut out.
Forced stop, use saved ref. [1] is selected if the frequency converter is to remain stopped when the mains voltage is engaged, until the [START]-key is activated. After a start command the motor speed is ramped up to the saved reference in parameter 003 *Local reference*.
Forced stop, set ref. to 0 [2] is selected if the frequency converter is to remain stopped when the mains voltage is cut back in. Parameter 003 *Local reference* is to be zeroed.

NB!
In remote operation (parameter 002 *Local/remote operation*) the start/stop state at the time of mains connection will depend on the external control signals. If *Pulse start* [8] is selected in parameter 302 *Digital input*, the motor will remain stopped after mains connection.

Programming

★ = factory setting, () = display text, [] = value for use in communication via serial communication port

020	Hand operation
	(HAND OPERATION)

Value:

☆ Not active (DISABLE)	[0]
Active (ENABLE)	[1]

Function:

In this parameter you can select whether it should be possible or not to switch between Auto- and Hand mode. In Auto mode the frequency converter is controlled by external signals whereas the frequency converter in Hand mode is controlled via a local reference directly from the control unit.

Description of choice:

If *Not active* [0] is selected in this parameter, the Hand mode function will be inactive. If *Active* [1] is selected you can switch between Auto- and Hand mode. For further information, see the *Control Unit* section.

024	Userdefined Quick Menu
	(user quickmenu)

Value:

☆ Not active (Disable)	[0]
Active (Enable)	[1]

Function:

In this parameter you can select the standard setup of the Quick menu key on the control panel and the LCP 2 control panel.
Using this function, in parameter 025 *Quick Menu setup* the user can select up to 20 parameters for the Quick Menu key.

Description of choice:

If *not active* [0] is selected, the standard setup of the Quick Menu key is active.
If *Active* [1] is selected, the user-defined Quick Menu is active.

025	Quick Menu setup
	(quick menu setup)

Value:

[Index 1 - 20] Value: 0 - 999	☆ 000

Function:

In this parameter you define which parameters are required in the Quick Menu when parameter 024 *User-defined Quick Menu* is set to *Active* [1].
Up to 20 parameters can be selected for the user-defined Quick Menu.

NB!
Please note that this parameter can only be set using an LCP 2 control panel. See *Order form*.

Description of choice:

The Quick Menu is set up as follows:

1. Select parameter 025 *Quick Menu setup* and press [CHANGE DATA].
2. Index 1 indicates the first parameter in Quick Menu. You can scroll between the index numbers using the [+ / -] keys. Select Index 1.
3. Using [< >] you can scroll between the three figures. Press the [<] key once ad the last number in the parameter number can be selected using the [+ / -] keys. Set Index 1 to 100 for parameter 100 *Configuration*.
4. Press [OK] when Index 1 has been set to 100.
5. Repeat steps 2 - 4 until all parameters required have been set to the Quick Menu key.
6. Press [OK] to complete the Quick Menu setup.

If parameter 100 *Configuration* is selected at Index 1, Quick Menu will start with this parameter every time Quick Menu is activated.

Please note that parameter 024 *User-defined Quick Menu* and parameter 025 *Quick Menu setup* are reset to the factory setting during initialisation.

☆ = factory setting, () = display text, [] = value for use in communication via serial communication port

- **Load and Motor**
- **Configuration**

Selection of configuration and torque characteristics has an effect on which parameters can be seen in the display. If *Open loop* [0] is selected, all parameters relating to PID regulation will be filtered out. This means that the user only sees the parameters that are relevant for a given application.

100	Configuration
	(Configuration)

Value:

★ Speed control, open loop (SPEED OPEN LOOP)	[0]
Speed control, closed loop (SPEED CLOSED LOOP)	[1]
Process control, closed loop (PROCESS CLOSED LOOP)	[3]

Function:

This parameter is used to select the configuration to which the frequency converter is to be adapted. This makes adaptation to a given application simple, since the parameters not used in a given configuration are hidden (not active).

Description of choice:

If *Speed control, open loop* [0] is selected, normal speed control is obtained (without feedback signal) with automatic load and slip compensation to ensure a constant speed at varying loads. Compensations are active, but may be disabled in parameter 134 *Load compensation* and parameter 136 *Slip compensation* as required.

If *Speed control, closed loop* [1] is selected, better speed accuracy is obtained. A feedback signal must be added, and the PID regulator must be set in parameter group 400 *Special functions*.

If *Process control, closed loop* [3] is selected, the internal process regulator is activated to enable precise control of a process in relation to a given process signal. The process signal can be set to the relevant process unit or as a percentage. A feedback signal must be added from the process and the process regulator must be set in parameter group 400 *Special functions*. Process closed loop is not active if a DeviceNet card is mounted and Instance 20/70 or 21/71 is chosen in parameter 904 *Instance types*.

101	Torque characteristic
	(TORQUE CHARACT)

Value:

★ Constant torque (Constant torque)	[1]
Variable torque low (torque: low)	[2]
Variable torque medium (torque: med)	[3]
Variable torque high (torque: high)	[4]
Variable torque low with CT start (VT LOW CT START)	[5]
Variable torque medium with CT start (VT MED CT START)	[6]
Variable torque high with CT start (VT HIGH CT START)	[7]
Special motor mode (Special motor mode)	[8]

CT = Constant torque

Function:

This parameter enables a choice of principle for adaptation of the U/f ratio of the frequency converter to the torque characteristic of the load. See par. 135 *U/f ratio.*

Description of choice:

If *Constant torque* [1] is selected, a load-dependent U/f characteristic is obtained, in which output voltage and output frequency are increased at increasing loads in order to maintain constant magnetization of the motor.

Select *Variable torque low* [2], *Variable torque medium* [3] or *Variable torque high* [4], if the load is square (centrifugal pumps, fans).
Variable torque - low with CT start [5], *- medium with CT start* [6] or *high with CT start* [7], are selected if you need a greater breakaway torque than can be achieved with the three first characteristics.

NB!
Load and slip compensation are not active if variable torque or special motor mode have been selected.

Programming

★ = factory setting, () = display text, [] = value for use in communication via serial communication port

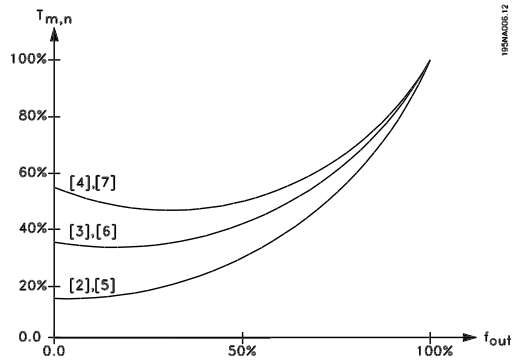

Select *Special motor mode* [8], if a special U/f setting is needed that is to be adapted to the present motor. The break points are set in parameters 423-428 *Voltage/frequency* .

NB!
Please note that if a value set in the nameplate parameters 102-106 is changed, there will be an automatic change of parameter 108 *Stator resistance* and 109 *Stator reactance*.

102	Motor power $P_{M,N}$
	(motor power)

Value:

0.25 - 22 kW ★ Depends on unit

Function:

Here you must set a power value [kW] $P_{M,N}$, corresponding to the motor's rated power. The factory sets a rated power value [kW] $P_{M,N}$, that depends on the type of unit.

Description of choice:

Set a value that matches the nameplate data on the motor. Settings between one size below and one size over the factory setting are possible.

103	Motor voltage $U_{M,N}$
	(MOTOR VOLTAGE)

Value:

For 200 V units: 50 - 999 V ★ 230 V

For 400 V units: 50 - 999 V ★ 400 V

Function:

This is where to set the rated motor voltage $U_{M,N}$ for either star Y or delta Δ.

Description of choice:

Select a value that corresponds to the nameplate data on the motor, regardless of the frequency converter's mains voltage.

104	Motor frequency $f_{M,N}$
	(MOTOR FREQUENCY)

Value:

24-1000 Hz ★ 50 Hz

Function:

This is where to select the rated motor frequency $f_{M,N}$.

Description of choice:

Select a value that corresponds to the nameplate data on the motor.

105	Motor current $I_{M,N}$
	(MOTOR CURRENT)

Value:

0,01 - I_{MAX} ★ Depends on choice of motor

Function:

The nominal, rated current of the motor $I_{M,N}$ forms part of the frequency converter calculation of features such as torque and motor thermal protection.

Description of choice:

Set a value that corresponds to the nameplate data on the motor. Set the motor current $I_{M,N}$ taking into account whether the motor is star-connected Y or delta-connected Δ.

106	Rated motor speed
	(MOTOR NOM. SPEED)

Value:

100 - $f_{M,N}$ x 60 (max. 60000 rpm) ★ Depends on parameter 104 *Motor frequency, $f_{M,N}$*

Function:

This is where to set the value that corresponds to the rated motor speed $n_{M,N}$ that can be seen from the nameplate data.

Description of choice:

Select a value that corresponds to the nameplate data on the motor.

★ = factory setting, () = display text, [] = value for use in communication via serial communication port

NB!
The max. value equals $f_{M,N}$ x 60. $f_{M,N}$ to be set in parameter 104 *Motor frequency, $f_{M,N}$* .

107	Automatic motor tuning, AMT (auto motor tun.)

Value:

✯ Optimisation off (AMT off)	[0]
Optimisation on (AMT start)	[2]

Function:

NB!
AMT is not possible on VLT 2880-82.

Automatic motor tuning is an algorithm that measures stator resistance R_S without the motor axle turning. This means that the motor is not delivering any torque. AMT can be used with benefit when initialising units where the user wishes to optimise adjustment of the frequency converter to the motor being used. This is used in particular when the factory setting does not sufficiently cover the motor.

For the best possible tuning of the frequency converter it is recommended that AMT is performed on a cold motor. It should be noted that repeated AMT runs can cause heating of the motor, resulting in an increase in the stator resistance R_S. As a rule, however, this is not critical.

AMT is performed as follows:

Start AMT:

1. Give a STOP signal.
2. Parameter 107 *Automatic motor tuning* is set at value [2] *Optimisation on*.
3. A START signal is given and parameter 107 *Automatic motor tuning* is reset to [0] when AMT has been completed.

Complete AMT:
AMT is completed by giving a RESET signal. Parameter 108 *Stator resistance, Rs* is updated with the optimised value.

Interrupting AMT:
AMT can be interrupted during the optimisation procedure by giving a STOP signal.

When using the AMT function the following points should be observed:

- For AMT to be able to define the motor parameters as well as possible, the correct type plate data for the motor connected to the frequency converter must be keyed into parameters 102 to 106.
- Alarms will appear in the display if faults arise during tuning of the motor.
- As a rule the AMT function will be able to measure the R_S values for motors that are 1-2 times larger or smaller than the frequency converter's nominal size.
- If you wish to interrupt automatic motor tuning, press the [STOP/RESET] key.

NB!
AMT may not be performed on motors connected in parallel, nor may setup changes be made while AMT is running.
The procedure for AMT controlled from the SLCP:
See section entitled *Control unit*.

Description of choice:
Select *Optimisation on* [2] if you want the frequency converter to perform automatic motor tuning.

108	Stator resistance R_S (STATOR RESISTAN)

Value:

0.000 - X.XXX Ω ✯ Depends on choice of motor

Function:
After setting of parameters 102-106 *Nameplate data,* a number of adjustments of various parameters is carried out automatically, including stator resistance R_S. A manually entered R_S must apply to a cold motor. The shaft performance can be improved by fine-tuning R_S and X_S, see procedure below.

NB!
Parameters 108 *Stator resistance R_S* and 109 *Stator reactance X_S* are normally not to be changed if nameplate data has been set.

Description of choice:
R_S can be set as follows:

Programming

✯ = factory setting, () = display text, [] = value for use in communication via serial communication port

1. Use the factory settings of R_S which the frequency converter itself chooses on the basis of the motor nameplate data.
2. The value is stated by the motor supplier.
3. The value is obtained through manual measurements: R_S can be calculated by measuring the resistance $R_{PHASE-PHASE}$ between two phase terminals. Where $R_{PHASE-PHASE}$ is lower than 1-2 Ohms (typical for motors > 5.5 kW, 400 V), a special Ohm-meter should be used (Thomson-bridge or similar). **R_S = 0.5 x $R_{PHASE-PHASE}$** .
4. R_S is set automatically when AMT has been completed. See parameter 107 *Auto motor adaption.*

109 Stator reactance X_S (STATOR REACTANCE)

Value:

0.00 - X,XX Ω ★ Depends on choice of motor

Function:

After setting of parameters 102-106 *Nameplate data*, a number of adjustments of various parameters are made automatically, including stator reactance X_S. The shaft performance can be improved by fine-tuning R_S and X_S, see procedure below.

Description of choice:

X_S can be set as follows:

1. The value is stated by the motor supplier.
2. The value is obtained through manual measurements X_S is obtained by connecting a motor to mains and measuring the phase-phase voltage U_M and the idle current $_\varphi$.

$$X_s = \frac{U_M}{\sqrt{3} \times I_\varphi} - \frac{X_L}{2}$$

X_L: See parameter 142.

3. Use the factory settings of X_S which the frequency converter itself chooses on the basis of the motor nameplate data.

117 Resonance damping (resonance damping)

Value:

OFF - 100%	[OFF - 100]
★ OFF %	[OFF]

Function:

It is possible to optimise the resonance damping in CT mode. The grade of the influence is adjusted in this parameter.
The value may be set between 0% (OFF) and 100%. 100% corresponds to 50% reduction of U/F ratio. Default value is OFF.

Internal settings (fixed):
The resonance filter is active from 10% of nominal speed and above.
In this case 5Hz and above.
Speed to go from 0 to nominal flux level: 500ms
Speed to go from nominal to 0 flux level: 500ms

Description of functionality:
The filter monitors the active motor current and changes the motor voltage according to the figure below. The filter reacts on levels referring to the nominal motor current.

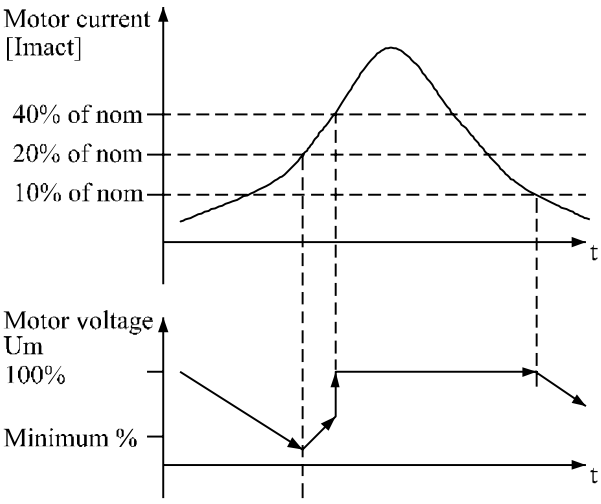

If the active motor current is below 10%, the motor voltage will be decreased by the speed mentioned above until the voltage reaches the setting for Par. 117. If the active motor current comes over 20% the voltage will be increased by the above mentioned speed. If the active motor current reaches 40% the motor voltage will be increased immediately to normal motor voltage.
The reduction in motor voltage depends on the parameter 117 setting.

Description of choice:

Set the grade of Motor current [Imact] influence on the U/F ratio between 0% (OFF) and 100%. 100% corresponds to 50% reduction of U/F ratio. Default value is OFF.

★ = factory setting, () = display text, [] = value for use in communication via serial communication port

119 High start torque
(High start torq.)

Value:

0.0 - 0.5 sec. ★ 0.0 sec.

Function:

To ensure a high start torque approx. 1.8 x $I_{INV.}$ can be permitted for max. 0.5 sec. The current is, however, limited by the frequency converter's (inverter's) safety limit. 0 sec. corresponds to no high start torque.

Description of choice:

Set the necessary time for which a high start torque is required.

---

120 Start delay
(START DELAY)

Value:

0.0 - 10.0 sec. ★ 0.0 sec.

Function:

This parameter enables a delay of the start-up time after the conditions for start have been fulfilled. When the time has passed, the output frequency will start by ramping up to the reference.

Description of choice:

Set the necessary time before commencing to accelerate.

---

121 Start function
(START FUNCTION)

Value:

DC hold during start delay time (DC HOLD/DELAY TIME) [0]

DC brake during start delay time (DC BRAKE/DELAY TIME) [1]

★ Coasting during start delay time (COAST/DELAY TIME) [2]

Start frequency/voltage clockwise (CLOCKWISE OPERATION) [3]

Start frequency/voltage in reference direction (VERTICAL OPERATION) [4]

Function:

This is where to choose the required mode during the start delay time (parameter 120 *Start delay time*).

Description of choice:

Select *DC hold during start delay time* [0] to energize the motor with a DC hold voltage during the start delay time. Set voltage in parameter 137 *DC hold voltage*.

Choose *DC brake during start delay time* [1] to energize the motor with a DC brake voltage during the start delay time. Set voltage in parameter 132 *DC brake voltage*.

Choose *Coasting during start delay time* [2] and the motor will not be controlled by the frequency converter during the start delay time (inverter turned off).

Choose *Start frequency/voltage clockwise* [3] to obtain the function described in parameter 130 *Start frequency* and 131 *Voltage at start* during start delay time. Regardless of the value assumed by the reference signal, the output frequency equals the setting in parameter 130 *Start frequency* and the output voltage will correspond to the setting in parameter 131 *Voltage at start* .
This functionality is typically used in hoist applications. It is used in particular in applications in which a cone anchor motor is applied, where the direction of rotation is to start clockwise followed by the reference direction.

Select *Start frequency/voltage in reference direction* [4] to obtain the function described in parameter 130 *Start frequency* and 131 *Voltage at start* during the start delay time.
The direction of rotation of the motor will always follow in the reference direction. If the reference signal equals zero, the output frequency will equal 0 Hz, while the output voltage will correspond to the setting in parameter 131 *Voltage at start*. If the reference signal is different from zero, the output frequency will equal parameter 130 *Start frequency* and the output voltage will equal parameter 131 *Voltage at start*. This functionality is used typically for hoist applications with counterweight. It is used in particular for applications in which a cone anchor motor is applied. The cone anchor motor can break away using parameter 130 *Start frequency* and parameter 131 *Voltage at start*.

Programming

★ = factory setting, () = display text, [] = value for use in communication via serial communication port

122	Function at stop
	(FUNCTION AT STOP)

Value:

✯ Coasting (COAST)	[0]
DC hold (DC HOLD)	[1]

Function:

This is where to choose the function of the frequency converter after the output frequency has become lower than the value in parameter 123 *The min. frequency for activation of function at stop* or after a stop command and when the output frequency has been ramped down to 0 Hz.

Description of choice:

Select *Coasting* [0] if the frequency converter is to 'let go' of the motor (inverter turned off).

Select DC hold [1] if parameter 137 *DC hold voltage* is to be activated.

123	Min. frequency for activation of function at stop
	(MIN.F.FUNC.STOP)

Value:

0,1 - 10 Hz	✯ 0,1 Hz

Function:

In this parameter, the output frequency is set at which the function selected in parameter 122 *Function at stop* is to be activated.

Description of choice:

Set the required output frequency.

NB!
If parameter 123 is set higher than parameter 130, then the start delay function (parameter 120 and 121) will be skipped.

NB!
If parameter 123 is set too high, and DC hold has been chosen in parameter 122, the output frequency will jump to the value in parameter 123 without ramping up. This may cause an overcurrent warning / alarm.

■ DC Braking

During DC braking DC voltage is supplied to the motor, and this will cause the shaft to be brought to a standstill. In parameter 132 *DC brake voltage* DC brake voltage can be preset from 0-100%. Max. DC brake voltage depends on the motor data selected.
In parameter 126 *DC braking time* DC braking time is determined and in parameter 127 *DC brake cut-in frequency* the frequency at which DC braking becomes active is selected. If a digital input is programmed to *DC braking inverse* [5] and shifts from logic '1' to logic '0', DC braking will be activated. When a stop command becomes active, DC braking is activated when the output frequency is less than the brake cut-in frequency.

NB!
DC braking may not be used if the inertia in the motor shaft is more than 20 times greater than the motor's internal inertia.

126	DC brake time
	(DC BRAKING TIME)

Value:

0 - 60 sec.	✯ 10 sec

Function:

In this parameter, the DC brake time is set at which parameter 132 *DC brake voltage* is to be active.

Description of choice:

Set the required time.

127	DC brake cut-in frequency
	(DC BRAKE CUT-IN)

Value:

0.0 (OFF) - par. 202 *Output frequency high limit, f_{MAX}*	✯ OFF

Function:

In this parameter, the DC brake cut-in frequency is set at which the DC brake is to be activated in connection with a stop command.

Description of choice:

Set the required frequency.

✯ = factory setting, () = display text, [] = value for use in communication via serial communication port

128 Thermal motor protection (MOT.THERM PROTEC)

Value:

★ No protection (NO PROTECTION)	[0]
Thermistor warning (THERMISTOR WARN)	[1]
Thermistor trip (THERMISTOR TRIP)	[2]
ETR warning 1 (ETR WARNING 1)	[3]
ETR trip 1 (ETR TRIP 1)	[4]
ETR warning 2 (ETR WARNING 2)	[5]
ETR trip 2 (ETR TRIP 2)	[6]
ETR warning 3 (ETR WARNING 3)	[7]
ETR trip 3 (ETR TRIP 3)	[8]
ETR warning 4 (ETR WARNING 4)	[9]
ETR trip 4 (ETR TRIP 4)	[10]

Function:

The frequency converter can monitor the motor temperature in two different ways:

- Via a PTC thermistor that is mounted on the motor. The thermistor is connected between terminal 50 (+10V) and one of the digital input terminals 18, 19, 27 or 29. See parameter 300 *Digital inputs.*
- Thermal load calculation (ETR - Electronic Thermal Relay), based on present load and time. This is compared with the rated motor current $I_{M,N}$ and rated motor frequency $f_{M,N}$. The calculations take into account the need for lower loading at low speeds due to the motor's internal ventilation being reduced.

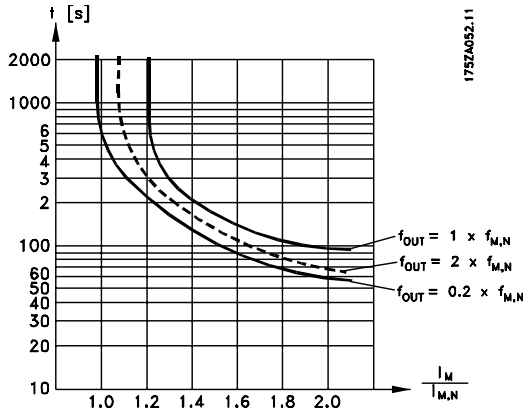

ETR functions 1-4 do not begin to calculate the load until you switch to the Setup in which they have been selected. This means that you can use the ETR function even when changing between two or more motors.

Description of choice:

Select *No protection* [0] if you do not want a warning or trip when a motor is overloaded.
Select *Thermistor warning* [1] if you want a warning when the connected thermistor becomes too hot.
Select *Thermistor trip* [2] if you want a trip when the connected thermistor becomes too hot.
Select *ETR warning 1-4* if you want a warning when the motor is overloaded according to the calculations. You can also programme the frequency converter to give a warning signal via one of the digital outputs. Select *ETR Trip 1-4* if you want a trip when the motor is overloaded according to the calculations.

NB!
This function cannot protect the individual motors in the case of motors linked in parallel.

130 Start frequency (Start frequency)

Value:

0.0 - 10.0 Hz	★ 0.0 Hz

Function:

The start frequency is active for the time set in parameter 120 *Start delay*, after a start command. The output frequency will 'jump' to the next preset frequency. Certain motors, such as conical anchor motors, need an extra voltage/start frequency (boost) at start to disengage the mechanical brake. To achieve this parameters 130 *Start frequency* and 131 *Initial voltage* are used.

Description of choice:

Set the required start frequency. It is a precondition that parameter 121 *Start function*, is set to *Start frequency/voltage clockwise* [3] or *Start frequency voltage in reference direction* [4] and that in parameter 120 *Start delay* a time is set and a reference signal is present.

NB!
If parameter 123 is set higher than parameter 130, the start delay function (parameter 120 and 121) will be skipped.

131 Initial voltage (INITIAL VOLTAGE)

Value:

0.0 - 200.0 V	★ 0.0 V

Programming

★ = factory setting, () = display text, [] = value for use in communication via serial communication port

Function:

Initial voltage is active for the time set in parameter 120 *Start delay* , after a start command. This parameter can be used for example for lifting/dropping applications (conical anchor motors).

Description of choice:

Set the required voltage necessary to cut out the mechanical brake. It is assumed that parameter 121 *Start function*, is set to *Start frequency/voltage clockwise* [3] or *Start frequency/voltage in reference direction* [4] and that in parameter 120 *Start delay* a time is set, and that a reference signal is present.

132	DC brake voltage
	(DC BRAKE VOLTAGE)

Value:

0 - 100% of max. DC brake voltage ☆ 0%

Function:

In this parameter, the DC brake voltage is set which is to be activated at stop when the DC brake frequency set in parameter 127 *DC brake cut-in frequency* is reached, or if *DC braking inverse* is active via a digital input or via serial communication. Subsequently, the DC brake voltage will be active for the time set in parameter 126 *DC brake time*.

Description of choice:

To be set as a percentage value of the max. DC brake voltage, which depends on the motor.

133	Start voltage
	(START VOLTAGE)

Value:

0.00 - 100.00 V ☆ Depends on unit

Function:

A higher start torque can be obtained by increasing the start voltage. Small motors (< 1.0 kW) normally require a high start voltage.

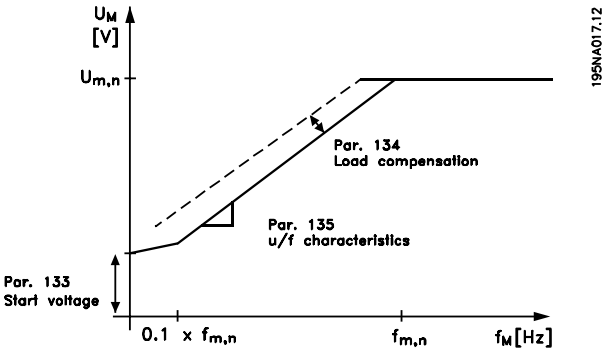

Description of choice:

The factory setting will be suitable for must applications, the value may need to be increase gradually for high torque application.

Warning: If the use of start voltage is exaggerated, this may lead to over-energizing and overheating of the motor and the frequency converter may cut out.

134	Load compensation
	(LOAD COMPENSATIO)

Value:

0.0 - 300.0% ☆ 100.0%

Function:

In this parameter, the load characteristic is set. By increasing the load compensation, the motor is given an extra voltage and frequency supplement at increasing loads. This is used e.g. in motors/applications in which there is a big difference between the full-load current and idle-load current of the motor.

NB!
If this value is set too high, the frequency converter may cut out because of overcurrent.

Description of choice:

If the factory setting is not adequate, load compensation must be set to enable the motor to start at the given load.

Warning: Should be set to 0% in connection with synchronous and parallel-coupled motors and in the case of quick load changes. Too high load compensation may lead to instability.

☆ = factory setting, () = display text, [] = value for use in communication via serial communication port

135 U/f-ratio
(U/f RATIO)

Value:
0.00 - 20.00 at Hz ★ Depends on unit

Function:
This parameter enables a shift in the ratio between output voltage (U) and output frequency (f) linearly, so as to ensure correct energizing of the motor and thus optimum dynamics, accuracy and efficiency. The U/f-ratio only affects the voltage characteristic if a selection has been made of *Constant torque* [1] parameter 101 *Torque characteristic.*

Description of choice:
The U/f-ratio is only to be changed if it is not possible to set the correct motor data in parameter 102-109. The value programmed in the factory settings is based on idle operation.

136 Slip compensation
(SLIP COMP.)

Value:
-500 - +500% of rated slip compensation ★ 100%

Function:
Slip compensation is calculated automatically, on the basis of such data as the rated motor speed $n_{M,N}$. In this parameter, the slip compensation can be fine-tuned, thereby compensating for tolerances on the value for $n_{M,N}$. Slip compensation is only active if a selection has been made of *Speedregulation, open loop* [0] in parameter 100 *Configuration* and *Constant torque* [1] in parameter 101 *Torque characteristic*.

Description of choice:
Key in a % value.

137 DC hold voltage
(DC HOLD VOLTAGE)

Value:
0 - 100% of max. DC hold voltage ★ 0%

Function:
This parameter is used to keep the motor (holding torque) at start/stop.

Description of choice:
This parameter can only be used if a selection has been made of *DC hold* in parameter 121 *Start function* or 122 *Function at stop* . To be set as a percentage value of the max. DC hold voltage, which depends on the choice of motor.

138 Brake cut out value
(Brake cut out)

Value:
0.5 - 132.0/1000.0 Hz ★ 3.0 Hz

Function:
Here you can select the frequency at which the external brake is released, via the output defined in parameter 323 *Relay output 1-3* or 341 *Digital output, terminal 46*.

Description of choice:
Set the required frequency.

139 Brake cut in frequency
(Brake cut in)

Value:
0.5 - 132.0/1000.0 Hz ★ 3.0 Hz

Function:
Here you can select the frequency at which the external brake is activated; this takes place via the output defined in parameter 323 *Relay output 1-3* or 341 *Digital output terminal 46*.

Description of choice:
Set the required frequency.

140 Current, minimum value
(CURRENT MIN VAL)

Value:
0 % - 100 % of inverter output current ★ 0 %

Function:
This is where the user selects the minimum motor current running for the mechanical brake to be released. Current monitoring is only active from stop until the point when the brake is released.

Description of choice:
This is an extra safety precaution, aimed at guaranteeing that the load is not lost during start of a lifting/lowering operation.

★ = factory setting, () = display text, [] = value for use in communication via serial communication port

142 Leakage reactance X_L
(LEAK. REACTANCE)

Value:

0.000 - XXX,XXX Ω ✯ Depends on choice of motor

X_L is sum of rotor and stator leakage reactance.

Function:

After setting of parameters 102-106 *Nameplate data*, a number of adjustments of various parameter is made automatically, including the leakage reactance X_L. The shaft performance can be improved by fine-tuning the leakage reactance X_L.

NB!
Parameter 142 *The leakage reactance X_L* is normally not to be changed if the nameplate data have been set, parameters 102-106.

Description of choice:

X_L can be set as follows:

1. The value is stated by the motor supplier.
2. Use the factory settings of X_L which the frequency converter itself chooses on the basis of the motor nameplate data.

---

143 Internal fan control
(fan control)

Value:

✯ Automatic (automatic)	[0]
Always switched on (always on)	[1]
Always switched off (always off)	[2]

Function:

This parameter can be set so that the internal fan is automatically switched on and off. You can also set the internal fan to be permanently switched on or off.

Description of choice:

If *Automatic* [0] is selected, the internal fan is switched on or off depending on the ambient temperature and the loading of the frequency converter.
If *Always switched on* [1] *Always switched off* [2] are selected, the internal fan will be permanently switched on or off.

NB!
If *Always switched off* [2] is selected in combination with high switch frequency, long motor cables or high output power, the frequency converter's life span is reduced.

---

144 Gain AC brake
(Gain AC brake)

Value:

1.00 - 1.50 ✯ 1.30

Function:

This parameter is used to set the AC brake. Using par. 144 it is possible to adjust the size of the generator torque that can be applied to the motor without the intermediate circuit voltage exceeding the warning level.

Description of choice:

The value is increased if a greater possible brake torque is required. If 1.0 is selected, this corresponds to the AC brake being inactive.

NB!
If the value in par. 144 is increased, the motor current will simultaneously increase significantly when generator loads are applied. The parameter should therefore only be changed if it is guaranteed during measurement that the motor current in all operating situations will never exceed the maximum permitted current in the motor. *Please note*: that the current cannot be read out from the display.

---

146 Reset voltage vector
(RESET VECTOR)

Value:

*Off (OFF)	[0]
Reset (RESET)	[1]

Function:

When the voltage vector is reset it is set to the same starting point each time a new process commences.

Description of choice:

Select reset (1) when running unique processes each time they arise. This will enable repetitive precision when stopping to be improved. Select Off (0) for ex-

✯ = factory setting, () = display text, [] = value for use in communication via serial communication port

ample for lifting/lowering operations or synchronous motors. It is an advantage that the motor and the frequency converter are always synchronized.

■ References & Limits

200 Output frequency range (OUT FREQ. RNG/ROT)

Value:

☆ Only clockwise, 0 - 132 Hz (132 Hz CLOCKWISE) [0]

Both directions, 0 - 132 Hz (132 Hz BOTH DIRECT) [1]

Anti-clockwise only, 0 - 132 Hz (132 Hz COUNTER CLOCK) [2]

Clockwise only, 0 - 1000 Hz (1000 Hz CLOCK WISE) [3]

Both directions, 0 - 1000 Hz (1000 Hz BOTH DIRECT) [4]

Anti-clockwise only, 0 - 1000 Hz (1000 Hz COUNTER CLOCK) [5]

Function:

This parameter guarantees protection against unwanted reversing. Furthermore, the maximum output frequency can be selected that is to apply regardless of the settings of other parameters. This parameter has no function if *Process regulation, closed loop* has been selected in parameter 100 *Configuration*.

Description of choice:

Select the required direction of rotation as well as the maximum output frequency. Please note that if *Clockwise only* [0]/[3] or *Anti-clockwise only* [2]/[5] is selected, the output frequency will be limited to the range f_{MIN}-f_{MAX}. If *Both directions* [1]/[4] is selected, the output frequency will be limited to the range ± f_{MAX} (the minimum frequency is of no significance).

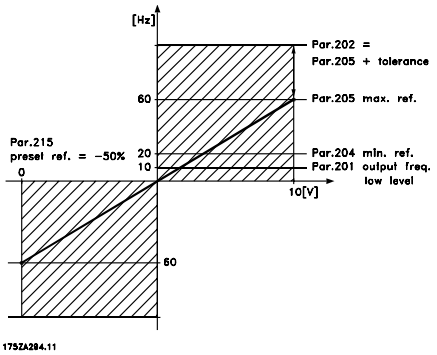

201 Output frequency low limit, f_{MIN} (MIN OUTPUT FREQ)

Value:

0.0 - f_{MAX} ☆ 0.0 Hz

Function:

In this parameter, a minimum motor frequency limit can be selected that corresponds to the minimum speed at which the motor is allowed to run. If *Both directions* has been selected in parameter 200 *Output frequency range*, the minimum frequency is of no significance.

Description of choice:

The value chosen can range from 0.0 Hz to the frequency set in parameter 202 *Output frequency high limit, f_{MAX}* .

202 Output frequency high limit, f_{MAX} (max. output freq)

Value:

f_{MIN} - 132/1000 Hz (par. 200 *Output frequency range*) ☆ 132 Hz

Function:

In this parameter, a maximum output frequency limit can be selected that corresponds to the highest speed at which the motor is allowed to run.

NB!
The output frequency of the frequency converter can never assume a value higher than 1/10 of the switching frequency (parameter 411 *Switching frequency*).

Description of choice:

A value can be selected from f_{MIN} to the value chosen in parameter 200 *Output frequency range*.

☆ = factory setting, () = display text, [] = value for use in communication via serial communication port

■ Handling of references

Handling of references is described in the block diagram below. The block diagram shows how a change in one parameter can affect the resulting reference.

Parameters 203 to 205 *Reference* and parameter 214 *Reference function* define how the handling of references can be performed. The parameters mentioned can be active in both closed and open loop.

Remote controlled references are defined as:

- External references, such as analogue inputs 53 and 60, pulse references via terminal 33 and references from serial communication.
- Preset references.

The resulting reference can be shown on the LCP control unit's display by selecting *Reference* [%] in parameters 009-012 *Display readout* and can be shown as one unit by selecting *Reference [unit]*. The sum of the external references can be shown on the LCP control unit's display as a % of the area from *Minimum reference, Ref $_{MIN}$* to *Maximum reference, Ref $_{MAX}$* . Select *External reference, %* [25] in parameters 009-012 *Display readout* if a readout is desired.

It is possible to have both references and external references simultaneously. In parameter 214 *Reference function* a selection can be made to determine how preset references should be added to the external references.

There is also an independent local reference in parameter 003 *Local reference*, in which the resulting reference is set using the [+/-] keys. When the local reference has been selected, the output frequency range is limited by parameter 201 *Output frequency low limit, f_{MIN}* and parameter 202 *Output frequency high limit, f_{MAX}* .

The local reference unit depends on the selection in parameter 100 *Configuration.*

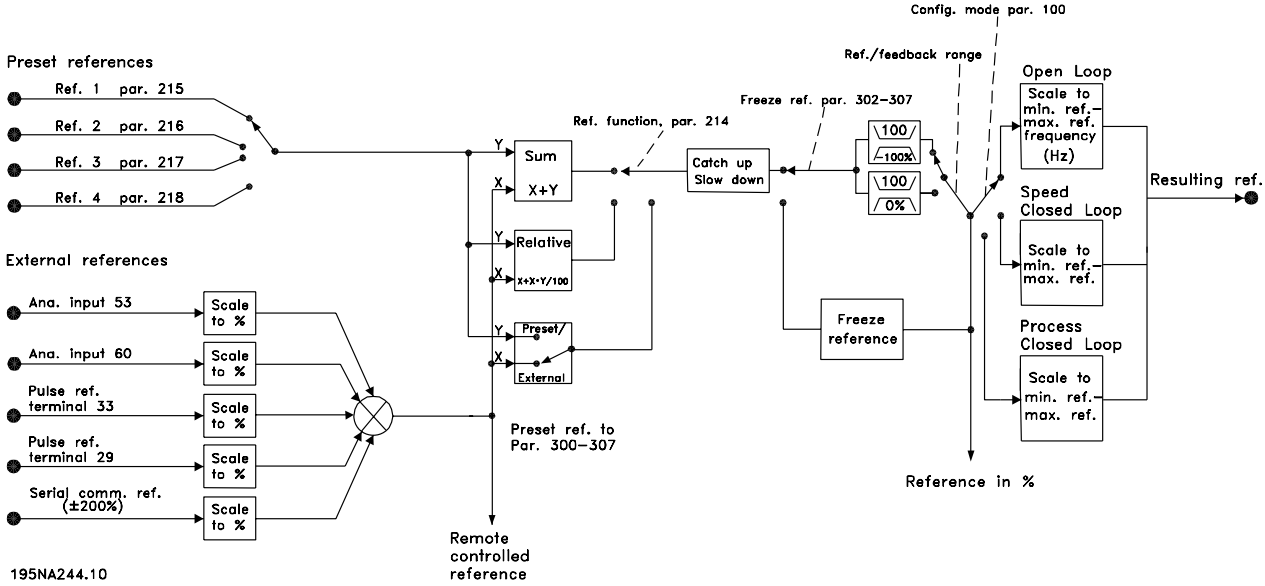

Programming

☆ = factory setting, () = display text, [] = value for use in communication via serial communication port

203 Reference range (REFERENCE RANGE)

Value:

★ Min. reference - Max reference (min - max)	[0]
-Max. reference - Max. reference (-max - +max)	[1]

Function:

In this parameter you select whether the reference signal must be positive or whether it can be both positive and negative. The minimum limit may be a negative value, unless in parameter 100 *Configuration* a selection has been made of *Speed regulation, closed loop*. You should select *Min ref. - Max. ref.* [0], if *Process regulation, closed loop* [3] has been selected in parameter 100 *Configuration*.

Description of choice:

Select the required range.

204 Minimum reference, Ref_{MIN} (Min.reference)

Value:

Par. 100 *Config.* = *Open loop* [0].-100,000.000 - par. 205 Ref_{MAX}	★ 0.000 Hz
Par. 100 *Config.* = *Closed loop* [1]/[3].-Par. 414 *Minimum feedback* - par. 205 Ref_{MAX}	★ 0.000 rpm/par 416

Function:

Minimum reference is an expression of the minimum possible value of the total of all references. If in parameter 100 *Configuration*, *Speed regulation, closed loop* [1] or *Process regulation, closed loop* [3] is selected, the minimum reference is limited by parameter 414 *Minimum feedback*. Minimum reference is ignored if the local reference is active.

The reference unit can be defined from the following table:

Par. 100 *Configuration*	Unit
Open loop [0]	Hz
Speed reg, closed loop [1]	rpm
Process reg, closed loop [3]	Par. 416

Description of choice:

The minimum reference is preset if the motor has to run at a minimum speed, regardless of whether the resulting reference is 0.

205 Maximum reference, Ref_{MAX} (max.reference)

Value:

Par. 100 *Config.* = *Open loop* [0].Par. 204 Ref_{MIN} - 1000.000 Hz	★ 50.000 Hz
Par. 100 *Config.* = *Closed loop* [1]/[3]. Par. 204 Ref_{MIN} - Par. 415 *Max. feedback*	★ 50.000 rpm/par 416

Function:

The maximum reference gives the highest value that can be assumed by the sum of all references. If *Closed loop* [1]/[3] is selected in parameter 100 *Configuration* the maximum reference cannot exceed the value in parameter 415 *Maximum feedback*.
Maximum reference is ignored if the local reference is active.

The reference unit can be defined from the following table:

Par. 100 *Configuration*	Unit
Open loop [0]	Hz
Speed reg, closed loop [1]	rpm
Process reg, closed loop [3]	Par. 416

Description of choice:

Maximum reference is set, if the speed of the motor is to be max. the set value, regardless of the whether the resulting reference is greater than the maximum reference.

206 Ramp type (Ramp type)

Value:

★ Linear (Linear)	[0]
Sin shaped (SIN SHAPED)	[1]
Sin^2 shaped (S-SHAPED 2)	[2]

Function:

You can choose between a linear, an S-shaped and an S^2 ramp process.

Description of choice:

Select the required ramp type depending on the required acceleration/deceleration process.

★ = factory setting, () = display text, [] = value for use in communication via serial communication port

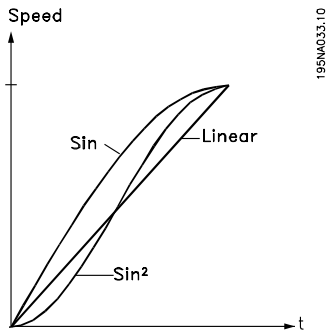

207 Ramp-up time 1
(ramp-up time 1)

Value:

0.02 - 3600.00 sec ☆ 3.00 sec (VLT 2803-2875)
10.00 sec (VLT 2880-2882)

Function:

The ramp-up time is the acceleration time from 0 Hz to the rated motor frequency $f_{M,N}$ (parameter 104 *Motor frequency, $f_{M,N}$*). It is assumed that the output current will not reach the current limit (set in parameter 221 *Current limit I_{LIM}*).

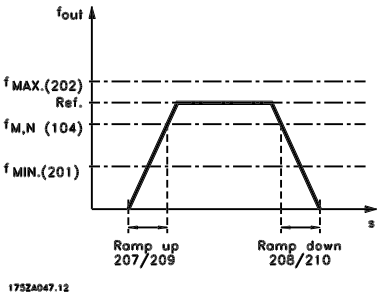

Description of choice:

Set the required ramp-up time.

208 Ramp-down time 1
(ramp down time 1)

Value:

0.02 - 3600.00 sec ☆ 3.00 sec (VLT 2803-2875)
10.00 sec (VLT 2880-2882)

Function:

The ramp-down time is the deceleration time from the rated motor frequency $f_{M,N}$ (parameter 104 *Motor frequency, $f_{M,N}$*) to 0 Hz, provided no overvoltage arises in the inverter because of generating operation of the motor.

Description of choice:

Set the required ramp-down time.

209 Ramp-up time 2
(ramp up time 2)

Value:

0.02 - 3600.00 sec. ☆ 3.00 sec (VLT 2803-2875)
10.00 sec (VLT 2880-2882)

Function:

See description of parameter 207 *Ramp-up time 1*.

Description of choice:

Set the required ramp-up time. Shift from ramp 1 to ramp 2 by activating *Ramp 2* via a digital input.

210 Ramp-down time 2
(RAMP DOWN TIME 2)

Value:

0.02 - 3600.00 sec. ☆ 3.00 sec (VLT 2803-2875)
10.00 sec (VLT 2880-2882)

Function:

See description of parameter 208 *Ramp-down time 1*.

Description of choice:

Set the required ramp-down time. Shift from ramp 1 to ramp 2 by activating *Ramp 2* via a digital input.

211 Jog ramp time
(jog ramp time)

Value:

0.02 - 3600.00 sec. ☆ 3.00 sec (VLT 2803-2875)
10.00 sec (VLT 2880-2882)

Function:

The jog ramp time is the acceleration/deceleration time from 0 Hz to the rated motor frequency $f_{M,N}$ (parameter 104 *Motor frequency, $f_{M,N}$*). It is assumed that the output current will not reach the current limit (set in parameter 221 *Current limit I_{LIM}*).

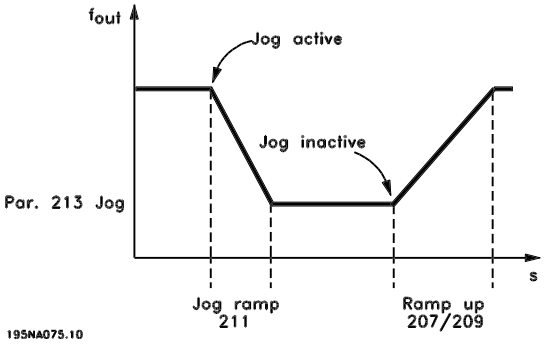

Programming

☆ = factory setting, () = display text, [] = value for use in communication via serial communication port

The jog ramp time starts if a jog-signal is given via the LCP control panel, one of the digital inputs or the serial communication port.

Description of choice:
Set the required ramp time.

212 Quick-stop ramp-down time (Q STOP RAMP TIME)

Value:

0.02 - 3600.00 sec. ★ 3.00 sec (VLT 2803-2875)
10.00 sec (VLT 2880-2882)

Function:
The quick-stop ramp-down time is the deceleration time from the rated motor frequency to 0 Hz, provided no overvoltage arises in the inverter because of generating operation of the motor, or if the generated current exceeds the current limit in parameter 221 *Current limit* I_{LIM} . Quick-stop is activated via one of the digital inputs or the serial communication.

Description of choice:
Set the required ramp-down time.

213 Jog frequency (Jog frequency)

Value:

0.0 - Par. 202 Output frequency high limit, f_{MAX} ★ 10.0 Hz

Function:
Jog frequency f_{JOG} means a fixed output frequency that the frequency converter supplies to the motor when the Jog function is activated. Jog can be activated via the digital inputs, serial communication or via the LCP control panel, on the condition that this is active in parameter 015 *Local jog*.

Description of choice:
Set the required frequency.

■ Reference function

The example shows how the resulting reference is calculated when *Preset references* is used together with *Sum* and *Relative* in parameter 214 *Reference function*. The formula for the calculation of the resulting reference can be seen in the section entitled *All about the VLT 2800*. See also the drawing in *Handling of references*.

The following parameters are preset:

Par. 204	*Minimum reference*	10 Hz
Par. 205	*Maximum reference*	50 Hz
Par. 215	*Preset reference*	15 %
Par. 308	*Term. 53, Analogue input*	Reference
Par. 309	*Term. 53, min. scaling*	0 V
Par. 310	*Term. 53, max. scaling*	10 V

When parameter 214 *Reference function* is set to *Sum* [0] one of the preset *Preset references*(par. 215-218) is added to the external references as a percentage of the reference range. If terminal 53 is applied an analogue input voltage of 4 Volt will be the resulting reference:

Par. 214 *Reference function* = Sum [0]:	
Par. 204 *Minimum reference*	10.0 Hz
Reference contribution at 4 Volt	16.0 Hz
Par. 215 *Preset reference*	6.0 Hz
Resulting reference	32.0 Hz

When parameter 214 *Reference function* is set to *Relative* [1] the defined Preset references (par. 215-218) are added as a percentage of the total of the present external references. If terminal 53 is applied to an analogue input voltage of 4 Volt the resulting reference will be:

Par. 214 *Reference function* = Relative [1]:	
Par. 204 *Minimum reference*	10.0 Hz
Reference effect at 4 Volt	16.0 Hz
Par. 215 *Preset reference*	2.4 Hz
Resulting reference	28.4 Hz

The graph shows the resulting reference in relation to the external reference, which varies from 0-10 Volt. Parameter 214 *Reference function* is programmed to *Sum* [0] and *Relative* [1] respectively. Also shown is a graph in which parameter 215 *Preset reference 1* is programmed to 0 %.

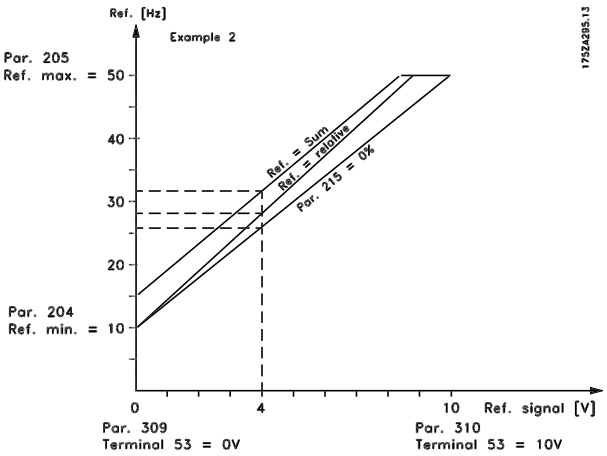

★ = factory setting, () = display text, [] = value for use in communication via serial communication port

214 Reference function (Ref function)

Value:

★ Sum (sum)	[0]
Relative (relative)	[1]
External/preset (external/preset)	[2]

Function:

It is possible to define how preset references are to be added to the other references; for this purpose, use *Sum* or *Relative*. It is also possible by using the *External/preset* to select whether a shift between external references and preset references is required.
External reference is the sum of the analogue references, pulse references and any references from serial communication.

Description of choice:

If *Sum* [0] is selected, one of the adjusted preset references (parameters 215-218 *Preset reference*) is summarized as a percentage of the reference range (Ref_{MIN} - Ref_{MAX}), added to the other external references.
If *Relative* [1] is selected, one of the added preset references (parameters 215-218 *Preset reference*) is summarized as a percentage of the sum of present external references.
If *External/preset* [2] is selected, it is possible via a digital input to shift between external references or preset references. Preset references will be a percentage value of the reference range.

NB!
If Sum or Relative is selected, one of the preset references will always be active. If the preset references are to be without influence, they must be set to 0% (factory setting).

215 Preset reference 1 (PRESET REF. 1)
216 Preset reference 2 (PRESET REF. 2)
217 Preset reference 3 (PRESET REF. 3)
218 Preset reference 4 (PRESET REF. 4)

Value:

-100.00% - +100.00% ★ 0.00%
of the reference range/external reference

Function:

Four different preset references can be programmed in parameters 215-218 *Preset reference*.

The preset reference is stated as a percentage of the reference range (Ref_{MIN} - Ref_{MAX}) or as a percentage of the other external references, depending on the choice made in parameter 214 *Reference function*.
The choice between preset references can be made via the digital inputs or via serial communication.

Preset ref., msb	Preset ref. lsb	
0	0	Preset ref. 1
0	1	Preset ref. 2
1	0	Preset ref. 3
1	1	Preset ref. 4

Description of choice:

Set the preset reference(s) that is/are to be the options.

219 Catch up/Slow down reference (Catch up/Slw dwn)

Value:

0.00 - 100% of the given reference ★ 0.00%

Function:

In this parameter, the percentage value can be set which will either be added to or deducted from the remote-controlled references.
The remote-controlled reference is the sum of preset references, analogue references, pulse reference and any references from serial communication.

Description of choice:

If *Catch up* is active via a digital input, the percentage value in parameter 219 *Catch up/Slow down reference* will be added to the remote-controlled reference.
If *Slow down* is active via a digital input, the percentage value in parameter 219 *Catch up/Slow down reference* will be deducted from the remote-controlled reference.

221 Current limit, I_{LIM} (current limit)

Value:

0 - XXX.X % of par. 105 ★ 160 %

Function:

In this parameter, the maximum output current I_{LIM} is set. The factory-set value corresponds to the maximum output current I_{MAX}. If the current limit is to be used as motor protection, set the rated motor current. If the current limit is set above 100% (the rated output current of the frequency converter, $I_{INV.}$), the frequency converter can only handle a load intermittently, i.e. for

Programming

★ = factory setting, () = display text, [] = value for use in communication via serial communication port

short periods at a time. After the load has been higher than $I_{INV.}$, it must be ensured that for a period the load is lower than $I_{INV.}$ Please note that if the current limit is set at a lower value than $I_{INV.}$, the acceleration torque will be reduced to the same extent.

Description of choice:

Set the required maximum output current I_{LIM}.

---

223 Warning: Low current, I_{LOW} (warn. current lo)

Value:

0.0 - par. 224 *Warning: High current, I_{HIGH}* ★ 0.0 A

Function:

If the output current falls below the preset limit I_{LOW} a warning is given.
The signal outputs can be programmed to give a warning signal via terminal 46 and via the relay output.

Description of choice:

The lower signal limit of the output current I_{LAV} must be programmed within the normal working range of the frequency converter.

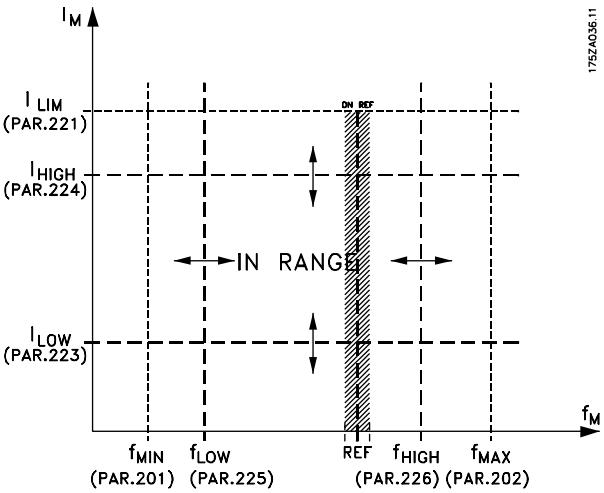

---

224 Warning: High current, I_{HIGH} (warn. current hi)

Value:

0 - I_{MAX} ★ I_{MAX}

Function:

If the output current exceeds the preset limit I_{HIGH} a warning is given.
The warning functions are activated when the output frequency has reached the resulting reference. The signal outputs can be programmed to give a warning signal via terminal 46 and via the relay output.

Description of choice:

The output current's upper signal limit I_{HIGH} must be programmed within the frequency converter's normal operating range. See drawing at parameter 223 *Warning: Low current, I_{LOW}* .

---

225 Warning: Low frequency, f_{LOW} (warn.freq. low)

Value:

0.0 - par. 226 *Warn.: High frequency, f_{HIGH}* ★ 0.0 Hz

Function:

If the output frequency falls below the preset limit f_{LOW}, a warning is given.
Parameters 223-228 *Warning functions* are out of function during ramp-up after a start command and after stop command or during stop. The warning functions are activated when the output frequency has reached the resulting reference. The signal outputs can be programmed to give a warning signal via terminal 46 and via the relay output.

Description of choice:

The lower signal limit of the output frequency f_{LOW} must be programmed within the normal operating range of the frequency converter. See drawing at parameter 223 *Warning: Low current, I_{LOW}.*

---

226 Warning: High frequency f_{HIGH} (warn.freq.high)

Value:

Par. 200 *Frequency range* = 0-132 Hz [0]/[1].par. 225 f_{LOW} - 132 Hz ★ 132.0 Hz
Par. 200 *Frequency range* = 0-1000 Hz [2]/[3].par. 225 f_{LOW} - 1000 Hz ★ 132.0 Hz

Function:

If the output frequency exceeds the preset limit f_{HIGH} a warning is given.
Parameters 223-228 *Warning functions* do not work during ramp-up after a start command and after stop command or during stop. The warning functions are activated when the output frequency has reached the

★ = factory setting, () = display text, [] = value for use in communication via serial communication port

resulting reference. The signal outputs can be programmed to give a warning signal via terminal 46 and via the relay output.

Description of choice:

The output frequency's upper signal limit f_{HIGH} must be programmed within the frequency converter's normal operating range. See drawing at parameter 223 *Warning: Low current, I_{LOW}* .

---

227 Warning: Low feedback, FB_{LOW} (warn.feedb. low)

Value:

-100,000.000 - par. 228 *Warn.:FB_{HIGH}* ✯ -4000.000

Function:

If the feedback signal falls below the preset limit FB_{LOW}, a warning is given.
Parameters 223-228 *Warning functions* are out of function during ramp-up after a start command and after a stop command or during stop. The warning functions are activated when the output frequency has reached the resulting reference.The signal outputs can be programmed to give a warning signal via terminal 46 and via the relay output.The unit for feedback in Closed loop is programmed in parameter 416 *Process units*.

Description of choice:

Set the required value within the feedback range (parameter 414 *Minimum feedback, FB_{MIN}* and 415 *Maximum feedback, FB_{MAX}*).

---

228 Warning: High feedback, FB_{HIGH} (warn.feedb high)

Value:

Par. 227 *Warn.: FB_{LOW}* - 100,000.000 ✯ 4000.000

Function:

If the feedback signal gets above the preset limit FB_{HIGH}, a warning is given.
Parameters 223-228 *Warning functions* are out of function during ramp-up after a start command and after a stop command or during stop. The warning functions are activated when the output frequency has reached the resulting reference. The signal outputs can be programmed to give a warning signal via terminal 46 and via the relay output. The unit for feedback in Closed loop is programmed in parameter 416 *Process units*.

Description of choice:

Set the required value within the feedback range (parameter 414 *Minimum feedback, FB_{MIN}* and 415 *Maximum feedback, FB_{MAX}*).

---

229 Frequence bypass, bandwidth (FREQ BYPASS B.W.)

Value:

0 (OFF) - 100 Hz ✯ 0 Hz

Function:

Some systems call for some output frequencies to be avoided because of mechanical resonance problems in the system. In parameters 230-231 *Frequency bypass* these output frequencies can be programmed. In this parameter a bandwidth can be defined on either side of these frequencies.

Description of choice:

The frequency set in this parameter will be centered around parameters 230 *Frequency bypass 1* and 231 *Frequency bypass 2*.

---

230 Frequency bypass 1 (FREQ. BYPASS 1)
231 Frequency bypass 2 (FREQ. BYPASS 2)

Value:

0 - 1000 Hz ✯ 0.0 Hz

Function:

Some SYSTEMs call for some output frequencies to be avoided because of mechanical resonance problems in the SYSTEM.

Description of choice:

Enter the frequencies to be avoided. See also parameter 229 *Frequency bypass, bandwidth*.

Programming

✯ = factory setting, () = display text, [] = value for use in communication via serial communication port

Inputs and outputs

Digital inputs	Term. no.	18[1]	19[1]	27	29	33
	par. no.	302	303	304	305	307
Value:						
No function	(NO OPERATION)	[0]	[0]	[0]	[0]	★ [0]
Reset	(RESET)	[1]	[1]	[1]	[1]	[1]
Coasting stop inverse	(MOTOR COAST INVERSE)	[2]	[2]	[2]	[2]	[2]
Reset and coasting inverse	(RESET AND COAST INV.)	[3]	[3]	★ [3]	[3]	[3]
Quick-stop inverse	(QUICK-STOP INVERSE)	[4]	[4]	[4]	[4]	[4]
DC braking inverse	(DC-BRAKE INVERSE)	[5]	[5]	[5]	[5]	[5]
Stop inverse	(STOP INVERSE)	[6]	[6]	[6]	[6]	[6]
Start	(START)	★ [7]	[7]	[7]	[7]	[7]
Pulse start	(LATCHED START)	[8]	[8]	[8]	[8]	[8]
Reversing	(REVERSING)	[9]	★ [9]	[9]	[9]	[9]
Reversing and start	(START REVERSING)	[10]	[10]	[10]	[10]	[10]
Start clockwise	(ENABLE FORWARD)	[11]	[11]	[11]	[11]	[11]
Start counterclockwise	(ENABLE REVERSE)	[12]	[12]	[12]	[12]	[12]
Jog	(JOGGING)	[13]	[13]	[13]	★ [13]	[13]
Freeze reference	(FREEZE REFERENCE)	[14]	[14]	[14]	[14]	[14]
Freeze output frequency	(FREEZE OUTPUT)	[15]	[15]	[15]	[15]	[15]
Speed up	(SPEED UP)	[16]	[16]	[16]	[16]	[16]
Speed down	(SPEED DOWN)	[17]	[17]	[17]	[17]	[17]
Catch-up	(CATCH-UP)	[19]	[19]	[19]	[19]	[19]
Slow-down	(SLOW-DOWN)	[20]	[20]	[20]	[20]	[20]
Ramp 2	(RAMP 2)	[21]	[21]	[21]	[21]	[21]
Preset ref, LSB	(PRESET REF, LSB)	[22]	[22]	[22]	[22]	[22]
Preset ref, MSB	(PRESET REF, MSB)	[23]	[23]	[23]	[23]	[23]
Preset reference on	(PRESET REFERENCE ON)	[24]	[24]	[24]	[24]	[24]
Thermistor	(THERMISTOR)	[25]	[25]	[25]	[25]	
Precise stop, inverse	(PRECISE STOP INV.)	[26]	[26]			
Precise start/stop	(PRECISE START/STOP)	[27]	[27]			
Pulse reference	(PULSE REFERENCE)					[28]
Pulse feedback	(PULSE FEEDBACK)					[29]
Pulse input	(PULSE INPUT)					[30]
Selection of Setup, lsb	(SETUP SELECT LSB)	[31]	[31]	[31]	[31]	[31]
Selection of Setup, msb	(SETUP SELECT MSB)	[32]	[32]	[32]	[32]	[32]
Reset and start	(RESET AND START)	[33]	[33]	[33]	[33]	[33]
Pulse counter start	(PULSE COUNTER START)	[34]	[34]			

1. All functions on terminal 18 and 19 are controlled by an interrupter, which means that the repetitive accuracy of the response time is constant. Can be used for start/stop, setup switch and especially for changing digital preset, i.e. to obtain a reproducable stop point when using creep speed. For further information see VLT 2800 Precise Stop Instruction, MI.28.CX.02.

Function:

In these parameters 302-307 *Digital inputs* it is possible to choose between the different enabled functions related to the digital inputs (terminals 18-33).

Description of choice:

No operation is selected if the frequency converter is not to react to signals transmitted to the terminal.

Reset resets the frequency converter after an alarm; however, a few alarms cannot be reset (trip locked) without first disconnecting the mains supply and reconnecting it. See table under *List of warnings and alarms*. Reset is activated on the leading edge of the signal.

Coasting stop inverse is used for making the frequency converter "let go" of the motor immediately (output

★ = factory setting, () = display text, [] = value for use in communication via serial communication port

transistors are "turned off"), which means that the motor runs freely to stop. Logic '0' leads to coasting to stop.

Reset and coasting inverse are used to activate motor coast simultaneously with reset. Logical '0' means motor coast stop and reset. Reset is activated on the falling edge.

Quick stop inverse is used for activating the quick-stop ramp down set in parameter 212 *Quick stop ramp-down time.* Logic '0' leads to quick stop.

DC-braking inverse is used for stopping the motor by energizing it with a DC voltage for a given time, see parameters 126, 127 and 132 *DC brake*. Please note that this function is only active if the value in parameter 126 *DC braking time* and 132 *DC brake voltage* is different from 0. Logic '0' leads to DC braking.

Stop inverse, a logic '0' means that the motor speed is ramped down to stop via the selected ramp.

None of the stop commands mentioned above are to be used as repair switches. Note that the frequency converter has more voltage inputs than L1, L2 and L3 when the DC bus terminals are used. Check that all voltage inputs are disconnected and that the prescribed time (4 mins.) has passed before repair work is commenced.

Start is selected if a start/stop command is required. Logic '1' = start, logic '0' = stop.

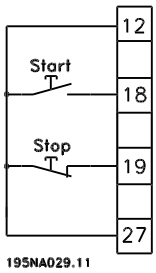

Latched start, if a pulse is applied for min. 14 ms, the frequency converter will start the motor, provided no stop command has been given. The motor can be stopped by briefly activating *Stop inverse*.

Reversing is used for changing the direction of rotation of the motor shaft. Logic '0' will not lead to reversing. Logic '1' will lead to reversing. The reverse signal only changes the direction of rotation, it does not activate the start. Is not active at *Process regulation, closed loop* . See also parameter 200 *Output frequency range/direction*.

Reversing and start is used for start/stop and for reversing with the same signal. No active start command is allowed at the same time. Acts as latch start reversing, provided latch start has been chosen for terminal 18. Is not active for *Process regulation, closed loop*. See also parameter 200 *Output frequency range/direction*.

Start clockwise is used if you want the motor shaft only to be able to rotate clockwise when started. Should not be used for *Process regulation, closed loop*.

Start anticlockwise is used if you want the motor shaft only to be able to rotate anticlockwise when started. Should not be used for *Process regulation, closed loop*. See also parameter 200 *Output frequency range/direction*.

Jog is used to override the output frequency to the jog frequency set in parameter 213 *Jog frequency*. Jog is active regardless of whether a start command has been given, yet not when *Coast stop*, *Quick-stop* or *DC braking* are active.

Freeze reference freezes the present reference. The reference can now only be changed via *Speed up* and *Speed down*. If *freeze reference* is active, it will be saved after a stop command and in the event of mains failure.

Freeze output freezes the present output frequency (in Hz). The output frequency can now only be changed via *Speed up* and *Speed down* .

NB!
If *Freeze output* is active the frequency converter can only be stopped if you select *Motor coast*, *Quick stop* or *DC braking* via a digital input.

Speed up and *Speed down* are selected if digital control of the up/down speed is required. This function is only active if *Freeze reference* or *Freeze output frequency* has been selected.
If *Speed up* is active the reference or output frequency will be increased, and if *Speed down* is active the reference or output frequency will be reduced. The output frequency is changed via the preset ramp times in parameters 209-210 *Ramp 2*.
One pulse (logic '1' minimum high for 14 ms and a minimum break time of 14 ms) will lead to a speed change of 0.1 % (reference) or 0.1 Hz (output frequency). Example:

Programming

★ = factory setting, () = display text, [] = value for use in communication via serial communication port

Term .29	Term. 33	Freeze ref/ freeze outp.	Function
0	0	1	No speed change
0	1	1	Speed up
1	0	1	Speed down
1	1	1	Speed down

Freeze reference can be changed even if the frequency converter has stopped. The reference will also be saved if the mains are disconnected.

Catch-up/Slow-down is selected if the reference value is to be increased or reduced by a programmable percentage value set in parameter 219 *Catch-up/Slow-down reference* .

Slow-down	Catch-up	Function
0	0	Unchanged speed
0	1	Increase by % value
1	0	Reduce by % value
1	1	Reduce by % value

Ramp 2 is selected if a shift between ramp 1 (parameters 207-208) and ramp 2 (parameters 209-210) is required. Logic '0' leads to ramp 1 and logic '1' leads to ramp 2.

Preset reference, lsb and *Preset reference, msb* makes it possible to select one of the four preset references, see the table below:

Preset ref. msb	Preset ref. lsb	Function
0	0	Preset ref. 1
0	1	Preset ref. 2
1	0	Preset ref. 3
1	1	Preset ref. 4

Preset reference on is used for shifting between remote-controlled reference and preset reference. It is assumed that External/preset [2] has been selected in parameter 214 *Reference function*. Logic '0' = remote-controlled references are active, logic '1' = one of the four preset references is active, as can be seen from the table above.

Thermistor is to be selected if a possibly integrated thermistor in the motor is to be able to stop the frequency converter if the motor overheats. The cut-out value is 3 kΩ.

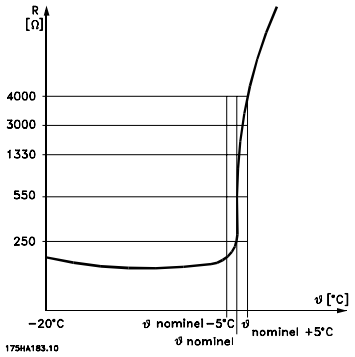

If a motor features a Klixon thermal switch instead, this can also be connected to the input. If motors operate in parallel, the thermistors/thermal switches can be connected in series (total resistance lower than 3 kΩ). Parameter 128 *Motor thermal protection* must be programmed for *Thermistor warning* [1] or *Thermistor trip* [2] and the thermistor is to be connected between a digital input and terminal 50 (+ 10 V supply).

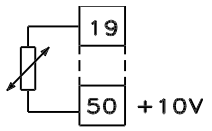

Precise stop, inverse is selected to obtain a high degree of accuracy when a stop command is repeated. A logic 0 means that the motor speed is ramped down to stop via the selected ramp.

Precise start/stop is selected to obtain a high degree of accuracy when a start and stop command is repeated.

Pulse reference is selected if the reference signal applied is a pulse train (frequency). 0 Hz corresponds to parameter 204 *Minimum reference, Ref_{MIN}* . The frequency set in parameter 327 *Pulse reference/feedback* corresponds to parameter 205 *Maximum reference Ref_{MAX}* .

Pulse feedback is selected if the feedback signal used is a pulse train (frequency). In parameter 327 *Pulse reference/feedback* the maximum pulse feedback frequency is set.

Pulse input is selected if a specific number of pulses must lead to a *Precise stop*, see parameter 343 *Precise stop* and parameter 344 *Counter value*.

Selection of Setup, lsb and *Selection of Setup, msb* gives the possibility to select one of the four setups. It is, however, a condition that parameter 004 is set to *Multisetup*.

Reset and start can be used as a start function. If 24 V are connected to the digital input, this will cause the

★ = factory setting, () = display text, [] = value for use in communication via serial communication port

frequency converter to reset and the motor will ramp up to the preset reference.

Pulse counter start is used to start a counter stop sequence with a pulse signal. The pulse width must at least be 14 ms and not longer than the count period. See also parameter 343 and the instruction, MI28CXYY.

308	Terminal 53, analogue input voltage (AI [V]53FUNCT.)

Value:

No function (NO OPERATION)	[0]
★ Reference (reference)	[1]
Feedback (feedback)	[2]
Wobble (WOBB.DELTA FREQ [%])	[10]

Function:

In this parameter it is possible to select the function required to be connected to terminal 53. Scaling of the input signal is made in parameter 309 *Terminal 53, min. scaling* and parameter 310 *Terminal 53, max. scaling*.

Description of choice:

No function [0]. Is selected if the frequency converter is not to react to signals connected to the terminal.
Reference [1]. If this function is selected, the reference can be changed by means of an analogue reference signal. If reference signals are connected to more than one input, these reference signals must be added up.If a voltage feedback signal is connected, select *Feedback* [2] on terminal 53.
Wobble [10]
The delta frequency can be controlled by the analog input. If *WOBB.DELTA FREQ* is selected as analog input (par. 308 or par. 314) the value selected in par. 702 equals 100 % analog input.
Example: Analog input = 4-20 mA, Delta freq. par. 702 = 5 Hz • 4 mA = 0 Hz and 20 mA = 5 Hz. If this function is chosen, see Wobble Instruction MI28JXYY for further information.

309	Terminal 53 Min. scaling (AI 53 SCALE LOW)

Value:

0.0 - 10.0 Volt ★ 0.0 Volt

Function:

This parameter is used for setting the signal value that is to correspond to the minimum reference or the minimum feedback, parameter 204 *Minimum reference, Ref_{MIN}* / 414 *Minimum feedback, FB_{MIN}*.

Description of choice:

Set the required voltage value. For reasons of accuracy, compensation should be made for voltage loss in long signal cables. If the Time out function is to be used (parameter 317 *Time out* and 318 *Function after time out*), the value set must be higher than 1 Volt.

310	Terminal 53 Max. scaling (AI 53 SCALE HIGH)

Value:

0 - 10.0 Volt ★ 10.0 Volt

Function:

This parameter is used for setting the signal value that is to correspond to the maximum reference value or maximum feedback, parameter 205 *Maximum reference, Ref_{MAX}* / 414 *Maximum feedback, FB_{MAX}* .

Description of choice:

Set the required voltage value. For reasons of accuracy, compensation should be made for voltage losses in long signal cables.

314	Terminal 60, analogue input current (AI [mA] 60 FUNCT)

Value:

No function (no operation)	[0]
Reference (reference)	[1]
★ Feedback (feedback)	[2]
Wobble (WOBB.DELTA FREQ [%])	[10]

Function:

This parameter allows a choice between the different functions available for the input, terminal 60. Scaling of the input signal is effected in parameter 315 *Terminal 60, min. scaling* and parameter 316 *Terminal 60, max. scaling*.

Description of choice:

No function [0]. Is selected if the frequency converter is not to react to signals connected to the terminal.
Reference [1]. If this function is selected, the reference can be changed by means of an analogue reference

Programming

★ = factory setting, () = display text, [] = value for use in communication via serial communication port

signal. If reference signals are connected to more than one input, these reference signals must be added up. If one current feedback signal is connected, select *Feedback* [2] on terminal 60.
Wobble [10]
The delta frequency can be controlled by the analog input. If *WOBB.DELTA FREQ* is selected as analog input (par. 308 or par. 314) the value selected in par. 702 equals 100 % analog input.
Example: Analog input = 4-20 mA, Delta freq. par. 702 = 5 Hz • 4 mA = 0 Hz and 20 mA = 5 Hz. If this function is chosen, see Wobble Instruction MI28JXYY for further information.

315 Terminal 60 Min. scaling
(AI 60 SCALE LOW)

Value:

0.0 - 20.0 mA ★ 4.0 mA

Function:

In this parameter you can set the signal value that will correspond to the minimum reference or minimum feedback, parameter 204 *Minimum reference, Ref_{MIN}* / 414 *Minimum feedback, FB_{MIN}* .

Description of choice:

Set the required current value. If the Time out function is to be used (parameter 317 *Time out* and 318 *Function after time out*) the value set must be higher than 2 mA.

316 Terminal 60 Max. scaling
(AI 60 SCALE HIGH)

Value:

0.0 - 20.0 mA ★ 20.0 mA

Function:

This parameter is used for setting the signal value that is to correspond to the maximum reference value, parameter 205 *Maximum reference value, Ref_{MAX}* .

Description of choice:

Set the required current value.

317 Time out
(LIVE ZERO TIME O)

Value:

1 - 99 sec. ★ 10 sec.

Function:

If the signal value of the reference or feedback signal connected to one of the input terminals 53 or 60 falls below 50 % of the minimum scaling for a period longer than the time set, the function selected in parameter 318 *Function after time out* will be activated. This function is only active if in parameter 309 *Terminal 53, min. scaling* a value higher than 1 Volt has been selected, or if in parameter 315 *Terminal 60, min. scaling* a value higher than 2 mA has been selected.

Description of choice:

Set the required time.

318 Function after time out
(LIVE ZERO FUNCT.)

Value:

★ No operation (NO OPERATION)	[0]
Freeze output frequency (FREEZE OUTPUT FREQ.)	[1]
Stop (stop)	[2]
Jog (jog)	[3]
Max. speed (MAX SPEED)	[4]
Stop and trip (STOP AND TRIP)	[5]

Function:

This parameter allows a choice of the function to be activated after the expiry of the Time out (parameter 317 *Time out*). If a time-out function occurs at the same time as a bus time-out function (parameter 513 *Bus time interval function*), the time-out function in parameter 318 will be activated.

Description of choice:

The output frequency of the frequency converter can be:

- frozen at the present frequency [1]
- overruled to stop [2]
- overruled to jog frequency [3]
- overruled to max. output frequency [4]
- overruled to stop with subsequent trip [5]

★ = factory setting, () = display text, [] = value for use in communication via serial communication port

319 Analogue output terminal 42 (AO 42 FUNCTION)

Value:

No function (NO OPERATION)	[0]
External reference min.-max. 0-20 mA (ref min-max = 0-20 mA)	[1]
External reference min.-max. 4-20 mA (ref min-max = 4-20 mA)	[2]
Feedback min.-max. 0-20 mA (fb min-max = 0-20 mA)	[3]
Feedback min.-max. 4-20 mA (fb min-max = 4-20 mA)	[4]
Output frequency 0-max 0-20 mA (0-fmax = 0-20 mA)	[5]
Output frequency 0-max 4-20 mA (0-fmax = 4-20 mA)	[6]
✯ Output current 0-I_{INV} 0-20 mA (0-iinv = 0-20 mA)	[7]
Output current 0-I_{IINV} 4-20 mA (0-iinv = 4-20 mA)	[8]
Output power 0-$P_{M,N}$ 0-20 mA (0-Pnom = 0-20 mA)	[9]
Output power 0-$P_{M,N}$ 4-20 mA (0-Pnom = 4-20 mA)	[10]
Inverter temperature 20-100 °C 0-20 mA (TEMP 20-100 C=0-20 mA)	[11]
Inverter temperature 20-100 °C 4-20 mA (TEMP 20-100 C=4-20 mA)	[12]

Function:

The analogue output can be used for stating a process value. It is possible to choose two types of output signals 0 - 20 mA or 4 - 20 mA.
If used as a voltage output (0 - 10 V), a pull-down resistor of 500 Ω must be fitted to common (terminal 55).
If the output is used as a current output the resulting resistance from the equipment connected may not exceed 500 Ω.

Description of choice:

No function. Is selected if the analogue output is not to be used.

External Ref_{MIN} - Ref_{MAX} 0-20 mA/4-20 mA.
An output signal is obtained, which is proportional to the resulting reference value in the interval Minimum reference, Ref_{MIN} - Maximum reference, Ref_{MAX} (parameters 204/205).

FB_{MIN}-FB_{MAX} 0-20 mA/ 4-20 mA.
An output signal is obtained, which is proportional to the feedback value in the interval Minimum feedback, FB_{MIN} - Maximum feedback, FB_{MAX} (parameter 414/415).

0-f_{MAX} 0-20 mA/4-20 mA.
An output signal is obtained, which is proportional to the output frequency in the interval 0 - f_{MAX} (parameter 202 *Output frequency, high limit, f_{MAX}*).

0 - I_{INV} 0-20 mA/4-20 mA.
An output signal is obtained, which is proportional to the output current in the interval 0 - I_{INV}

0 - $P_{M,N}$ 0-20 mA/4-20 mA.
An output signal is obtained, which is proportional to the present output power. 20 mA corresponds to the value set in parameter 102 *Motor power, $P_{M,N}$.*

0 - $Temp._{MAX}$ 0-20 mA/4-20 mA.
An output signal is obtained, which is proportional to the present heatsink temperature. 0/4 mA corresponds to a heatsink temperature of less than 20 °C, and 20 mA corresponds to 100 °C.

323 Relay output 1-3 (RELAY 1-3 FUNCT.)

Value:

No function (no operation)	[0]
✯ Unit ready (unit ready)	[1]
Enable/no warning (enable/no warning)	[2]
Running (RUNNING)	[3]
Running in reference, no warning (run on ref/no warn)	[4]
Running, no warnings (RUNNING/NO WARNING)	[5]
Running in reference range, no warnings (RUN IN RANGE/ NO WARN)	[6]
Ready - mains voltage within range (RDY NO OVER/UNDERVOL)	[7]
Alarm or warning (ALARM OR WARNING)	[8]
Current higher than current limit, par. 221 (Current limit)	[9]
Alarm (ALARM)	[10]
Output frequency higher than f_{LOW} par. 225 (above frequency low)	[11]
Output frequency lower than f_{HIGH} par. 226 (below frequency high)	[12]
Output current higher than I_{LOW} par. 223 (above current low)	[13]

Programming

✯ = factory setting, () = display text, [] = value for use in communication via serial communication port

Output current lower than I_{HIGH} par. 224 (below current high)	[14]
Feedback higher than FB_{LOW} par. 227 (above feedback low)	[15]
Feedback lower than FB_{HIGH} par. 228 (under feedback high)	[16]
Relay 123 (RELAY 123)	[17]
Reversing (REVERSE)	[18]
Thermal warning (THERMAL WARNING)	[19]
Local operation (LOCAL MODE)	[20]
Out of frequency range par. 225/226 (out of freq range)	[22]
Out of current range (out of current range)	[23]
Out of feedback range (out of fdbk. range)	[24]
Mechanical brake control (Mech. brake control)	[25]
Control word bit 11 (control word bit 11)	[26]
Sleep Mode (sleep mode)	[27]

Function:

The relay output can be used for giving the present status or warning. The output is activated (1-2 make) when a given condition is fulfilled.

Description of choice:

No function. Is selected if the frequency converter is not to react to signals.

Unit ready, there is a supply voltage on the control card of the frequency converter, and the frequency converter is ready for operation.

Enable, no warning, the frequency converter is ready for operation, but no start command has been given. No warning.

Running is active when there is a start command or the output frequency is above 0.1 Hz. Also active during ramp-down.

Running in reference, no warning speed according to reference.

Running, no warning, a start command has been given. No warning.

Ready - mains voltage within range, the frequency converter is ready for use; the control card is receiving a supply voltage; and there are no active control signals on the inputs. The mains voltage lies within the voltage limits.

Alarm or warning, the output is activated by an alarm or warning.

Current limit, the output current is higher than the value programmed in parameter 221 Current limit I_{LIM}.

Alarm, The output is activated by an alarm.

Output frequency higher than f_{LOW} , the output frequency is higher than the value set in parameter 225 *Warning: Low frequency, f_{LOW}* .

Output frequency lower than f_{HIGH}, the output frequency is lower than the value set in parameter 226 *Warning: High frequency, f_{HIGH}* .

Output current higher than I_{LOW} , the output current is higher than the value set in parameter 223 *Warning: Low current, I_{LOW}* .

Output current lower than I_{HIGH} , the output current is lower than the value set in parameter 224 *Warning: High current, I_{HIGH}* .

Feedback higher than FB_{LOW} , the feedback value is higher than the value set in parameter 227 *Warning: Low feedback, FB_{LOW}* .

Feedback lower than FB_{HIGH} , the feedback value is lower than the value set in parameter 228 *Warning: High current, I_{HIGH}* .

Relay 123 is only used in connection with Profidrive.

Reversing, The relay output is activated when the direction of motor rotation is counterclockwise. When the direction of motor rotation is clockwise, the value is 0 V DC.

Thermal warning, above the temperature limit in either the motor or the frequency converter, or from a thermistor connected to a digital input.

Local operation, the output is active when in parameter 002 *Local/remote operation, Local operation* [1] has been selected.

Out of the frequency range, the output frequency is out of the programmed frequency range in parameters 225 and 226.

Out of the current range, the motor current is out of the programmed range in parameters 223 and 224.

Out of the feedback range, the feedback signal is out of the programmed range in parameters 227 and 228.

Mechanical brake control, enables you to control an external mechanical brake (see section about control of mechanical brake in the Design Guide).

★ = factory setting, () = display text, [] = value for use in communication via serial communication port

Control word bit 11, is active if bit 11 is high on the Bus Communication.

Sleep Mode, is active of the frequency is lower than 0.1 Hz.

327 Pulse reference/feedback (PULSE REF/FB MAX)

Value:

150 - 67600 Hz ★ 5000 Hz

Function:

This parameter is used for setting the signal value that corresponds to the maximum value set in parameter 205 *Maximum reference, Ref_{MAX}* or to the maximum feedback value set in parameter 415 *Maximum feedback, FB_{MAX}* .

Description of choice:

Set the required pulse reference or pulse feedback to be connected to terminal 33.

328 Maximum Pulse 29 (MAX PULSE 29)

Value:

150 - 67600 Hz ★ 5000 Hz

Function:

This parameter is used for setting the signal value that corresponds to the maximum value set in parameter 205 *Maximum reference, Ref_{MAX}* or to the maximum feedback value set in parameter 415 *Maximum feedback, FB_{MAX}* .

NB!
Only relevant for DeviceNet. See MG90BXYY for further information.

341 Digital / pulse output terminal 46 (DO 46 FUNCTION)

Value:

Unit ready (UNIT READY)	[0]
Parameter [0] - [20] see parameter 323	
Pulse reference (PULSE REFERENCE)	[21]
Parameter [22] - [25] see parameter 323	
Pulse feedback (PULSE FEEDBACK)	[26]
Output frequency (PULSE OUTPUTFREQ)	[27]
Pulse current (PULSE CURRENT)	[28]
Pulse power (PULSE POWER)	[29]
Pulse temperature (PULSE TEMP)	[30]
Control Word Bit 12 (control word bit 12)	[31]
Sleep Mode (sleep mode)	[32]

Function:

The digital output can be used for giving the present status or warning. The digital output (terminal 46) gives a 24 V DC signal when a given condition is fulfilled. Terminal can also be used for frequency output. Parameter 342 sets the maximum pulse frequency.

Description of choice:

Pulse reference Ref_{MIN} - Ref_{MAX}
An output signal is obtained, which is proportional to the resulting reference value in the interval Minimum reference, Ref_{MIN} - Maximum reference, Ref_{MAX} (parameters 204/205).

Pulse feedback FB_{MIN}-FB_{MAX} .
An output signal is obtained, which is proportional to the feedback value in the interval Minimum feedback, FB_{MIN} - Maximum feedback, FB_{MAX} (parameter 414/415).

Output frequency 0-f_{MAX}.
An output signal is obtained, which is proportional to the output frequency in the interval 0 - f_{MAX} (parameter 202 *Output frequency, high limit, f_{MAX}*).

Pulse current 0 - I_{INV}..
An output signal is obtained, which is proportional to the output current in the interval 0 - I_{INV}.

Pulse power 0 - $P_{M,N}$.
An output signal is obtained, which is proportional to the present output power. Par. 342 corresponds to the value set in parameter 102 *Motor power, $P_{M,N}$.*

Pulse temperature 0 - $Temp._{MAX}$.
An output signal is obtained, which is proportional to the present heatsink temperature. 0 Hz corresponds to a heatsink temperature of less than 20° C, and parameter 342 corresponds to 100° C.

NB!
Output terminal 46 is not available on DeviceNet. Minimum output frequency at frequency output = 16 Hz

Control word bit 12,
Output is active if bit 12 is high on the Bus Communication.

Sleep Mode,

Programming

★ = factory setting, () = display text, [] = value for use in communication via serial communication port

Is active if the frequency is lower than 0.1 Hz.

342	Terminal 46, max. pulse scaling (DO 46 MAX. PULS)

Value:

150 - 10000 Hz ★ 5000 Hz

Function:

This parameter is used for setting the pulse output signal's maximum frequency.

Description of choice:

Set the required frequency.

343	Precise stop function (Precise stop)

Value:

★ Precise ramp stop (normal)	[0]
Counter stop with reset (Count stop reset)	[1]
Counter stop without reset (Count stop no reset)	[2]
Speed-compensated stop (Spd cmp stop)	[3]
Speed-compensated counter stop with reset (Spd cmp cstop w. res)	[4]
Speed-compensated counter stop without reset (Spd cmp cstop no res)	[5]

Function:

In this parameter you select which stop function is performed in response to a stop command. All six data selections contain a precise stop routine, thus ensuring a high level of repeat accuracy.
The selections are a combination of the functions described below.

NB!
Pulse start [8] may not be used together with the precise stop function.

Description of choice:

Precise ramp stop [0] is selected to achieve high repetitive precision at the stopping point.
Counter stop. Once it has received a pulse start signal the frequency converter runs until the number of pulses programmed by the user have been received at input terminal 33. In this way an internal stop signal will activate the normal ramp down time (parameter 208).
The counter function is activated (starts timing) at the flank of the start signal (when it changes from stop to start).
Speed compensated stop. To stop at precisely the same point, regardless of the present speed, a stop signal received is delayed internally when the present speed is lower than the maximum speed (set in parameter 202).
Reset. *Counter stop* and *Speed-compensated stop* can be combined with or without reset.
Counter stop with reset [1]. After each precise stop the number of pulses counted during ramp down 0 Hz is reset.
Counter stop without reset [2]. The number of pulses counted during ramp down to 0 Hz is deducted from the counter value in parameter 344.

344	Counter value (Pulse count pre.)

Value:

0 - 999999 ★ 100000 pulses

Function:

In this parameter you can select the counter value to be used in the integrated precise stop function (parameter 343).

Description of choice:

The factory setting is 100000 pulses. The highest frequency (max. resolution) that can be registered at terminal 33 is 67.6 kHz.

349	Speed comp delay (SPEED COMP DELAY)

Value:

0 ms - 100 ms ★ 10 ms

Function:

In this parameter the user can set the SYSTEM's delay time (Sensor, PLC, etc.). If you are running speed-compensated stop, the delay time at different frequencies has a major influence on the way in which you stop.

Description of choice:

The factory setting is 10 ms. This means that it is assumed that the total delay from the Sensor, PLC and other hardware corresponds to this setting.

★ = factory setting, () = display text, [] = value for use in communication via serial communication port

NB!
Only active for speed-compensated stop.

Special functions

400	Brake function
	(Brake function)

Value:

Off (off)	[0]
Resistor brake (Resistor)	[1]
AC brake (AC Brake)	[4]
Load sharing (load sharing)	[5]

Factory setting depends on unit type.

Function:

Resistor brake [1] is selected if the frequency converter has an integral brake transistor and brake resistor is connected to terminals 81, 82. A higher intermediate circuit voltage is permitted during braking (generated operation) when a brake resistor is connected.
AC brake [4] can be selected to improve braking without using brake resistors. Please note that *AC brake* [4] is not as effective as *Resistor brake* [1].

Description of choice:

Select *Resistor brake* [1] if a brake resistor is connected.
Select *AC brake* [4] if short-term generated loads occur. See parameter 144 *Gain AC brake* to set the brake.

Select *Load sharing* [5] if this is used.

NB!
A change of selection will not become active until the mains voltage has been disconnected and reconnected.

405	Reset function
	(reset mode)

Value:

☆ Manual reset (manual reset)	[0]
Automatic reset x 1 (AUTOMATIC x 1)	[1]
Automatic reset x 3 (AUTOMATIC x 3)	[3]
Automatic reset x 10 (AUTOMATIC x 10)	[10]
Reset at power-up (RESET AT POWER UP)	[11]

Function:

This parameter makes it possible to select whether reset and restart after a trip are to be manual or whether the frequency converter is to be reset and restarted automatically. Furthermore, it is possible to select the number of times a restart is to be attempted. The time between each attempt is set in parameter 406 *Automatic restart time*.

Description of choice:

If *Manual reset* [0] is selected, reset is to be carried out via the [STOP/RESET] key, a digital input or serial communication. If the frequency converter is to carry out an automatic reset and restart after a trip, select data value [1], [3] or [10].
If *Reset at power-up* [11] is selected, the frequency converter will carry out a reset if there has been a fault in connection with the mains failure.

The motor may start without warning.

406	Automatic restart time
	(autorestart time)

Value:

0 - 1800 sec.	☆ 5 sec.

Function:

This parameter allows setting of the time from tripping until the automatic reset function begins. It is assumed that automatic reset has been selected in parameter 405 *Reset function*.

Description of choice:

Set the required time.

409	Trip delay overcurrent, I_{LIM}
	(trip delay cur.)

Value:

0 - 60 sec. (61=OFF)	☆ OFF

Function:

When the frequency converter registers that the output current has reached the current limit I_{LIM} (parameter 221 *Current limit*) and remains there for the preset time, it is disconnected. Can be used to protect the application, like the ETR will protect the motor if selected.

☆ = factory setting, () = display text, [] = value for use in communication via serial communication port

Description of choice:

Select how long the frequency converter should maintain the output current at the current limit I_{LIM} before it disconnects. At OFF parameter 409 *Trip delay overcurrent, I_{LIM}* is not working, i.e. disconnection will not take place.

---

411 Switching frequency (Switch freq.)

Value:

3000 - 14000 Hz (VLT 2803 - 2875)	★ 4500 Hz
3000 - 10000 Hz (VLT 2880 - 2882)	★ 4500 Hz

Function:

The set value determines the switching frequency of the inverter. If the switching frequency is changed, this may help to minimise possible acoustic noise from the motor.

NB!
The output frequency of the frequency converter can never assume a value higher than 1/10 of the switching frequency.

Description of choice:

When the motor is running, the switching frequency is adjusted in parameter 411 *Switching frequency* until the frequency has been obtained at which the motor is as low-noise as possible.

NB!
The switching frequency is reduced automatically as a function of the load. See *Temperature-Dependent Switching Frequency* under *Special Conditions* .
When *LC-filter connected* is selected in parameter 412, the minimum switching frequency is 4.5 kHz.

---

412 Variable switching frequency (Var carrier freq.)

Value:

★ Without LC-filter (WITHOUT LC-FILTER)	[2]
LC-filter connected (LC-filter connected)	[3]

Function:

The parameter must be set to *LC-filter connected* if an LC-filter is connected between the frequency converter and the motor.

Description of choice:

The LC-filter connected [3] must be used if an LC-filter is connected between the frequency converter and the motor, as otherwise the frequency converter cannot protect the LC-filter.

NB!
When the LC filter is selected the switching frequency is changed to 4.5 kHz.

---

413 Overmodulation function (OVERMODULATION)

Value:

Off (off)	[0]
★ On (on)	[1]

Function:

This parameter allows connection of the overmodulation function for the output voltage.

Description of choice:

Off [0] means that there is no overmodulation of the output voltage, which means that torque ripple on the motor shaft is avoided. This can be a good feature, e.g. on grinding machines. *On* [1] means that an output voltage can be obtained which is greater than the mains voltage (up to 5 %).

---

414 Minimum feedback, FB_{MIN} (Min. feedback)

Value:

-100,000.000 - par. 415 FB_{MAX}	★ 0.000

Function:

Parameter 414 *Minimum feedback, FB_{MIN}* and 415 *Maximum feedback, FB_{MAX}* are used to scale the display text to make it show the feedback signal in a process unit proportionally to the signal on the input.

Description of choice:

Set the value to be shown on the display as the minimum feedback signal value on the selected feedback input (parameters 308/314 *Analogue inputs*).

★ = factory setting, () = display text, [] = value for use in communication via serial communication port

415 Maximum feedback, FB_{MAX} (Max. feedback)

Value:

FB_{MIN} - 100,000.000 ★ 1500.000

Function:

See description of parameter 414 *Minimum feedback, FB_{MIN}* .

Description of choice:

Set the value to be shown on the display when the maximum feedback has been obtained on the selected feedback input (parameter 308/314 *Analogue inputs*).

416 Process units (REF/FEEDB. UNIT)

Value:

★ No unit (No unit)	[0]
% (%)	[1]
ppm (ppm)	[2]
rpm (rpm)	[3]
bar (bar)	[4]
Cycles/min (CYCLE/MI)	[5]
Pulses/s (PULSE/S)	[6]
Units/s (UNITS/S)	[7]
Units/min. (UNITS/MI)	[8]
Units/h (Units/h)	[9]
°C (°C)	[10]
Pa (pa)	[11]
l/s (l/s)	[12]
m^3/s (m3/s)	[13]
l/min. (l/m)	[14]
m^3/min. (m3/min)	[15]
l/h (l/h)	[16]
m^3/h (m3/h)	[17]
Kg/s (kg/s)	[18]
Kg/min. (kg/min)	[19]
Kg/hour (kg/h)	[20]
Tons/min. (T/min)	[21]
Tons/hour (T/h)	[22]
Metres (m)	[23]
Nm (nm)	[24]
m/s (m/s)	[25]
m/min. (m/min)	[26]
°F (°F)	[27]
In wg (in wg)	[28]
gal/s (gal/s)	[29]
Ft^3/s (ft3/s)	[30]
Gal/min. (gal/min)	[31]
Ft^3/min. (Ft3/min)	[32]
Gal/h (gal/h)	[33]
Ft^3/h (Ft3/h)	[34]
Lb/s (lb/s)	[35]
Lb/min. (lb/min)	[36]
Lb/hour (lb/h)	[37]
Lb ft (lb ft)	[38]
Ft/s (ft/s)	[39]
Ft/min. (ft/min)	[40]
Psi (Psi)	[41]

Function:

Select among different units to be shown on the display. The unit is read out if an LCP control unit can be connected, and if *Reference [unit]* [2] or *Feedback [unit]* [3] has been selected in one of parameters 009-012 *Display read-out*, and in Display mode. The unit is used in *Closed loop* also as a unit for Minimum/Maximum reference and Minimum/Maximum feedback.

Description of choice:

Select the required unit for the reference/feedback signal.

VLT 2800 Regulators

The VLT 2800 has two integrated PID regulators, one to regulate speed and one to regulate processes.
Speed regulation and process regulation require a feedback signal back to an input. There are a number of settings for both PID regulators that are made in the same parameters, but selection of regulator type will affect the selections that have to be made in the shared parameters.
In parameter 100 *Configuration* it is possible to select regulator type, *Speed regulation, closed loop* [1] or *Process regulation, closed loop* [3].

Speed regulation

This PID regulation is optimised for use in applications in which there is a need to maintain a particular motor speed. The parameters that are specific for the speed regulator are parameter 417 to parameter 421.

Process regulation

The PID regulator maintains a constant process mode (pressure, temperature, flow, etc.) and adjusts the mo-

★ = factory setting, () = display text, [] = value for use in communication via serial communication port

tor speed on the basis of the reference/setpoint and feedback signal.
A transmitter provides the PID regulator with a feedback signal from the process as an expression of the process's actual mode. The feedback signal varies as the process load varies.
This means that there is a variance between the reference/setpoint and the actual process mode. This variance is compensated by the PID regulator by means of the output frequency being regulated up or down in relation to the variance between the reference/setpoint and the feedback signal.

The integrated PID regulator in the frequency converter has been optimised for use in process applications. This means that there are a number of special functions available in the frequency converter.
Previously it was necessary to obtain a system to handle these special functions by installing extra I/O modules and programming the system. With the frequency converter the need to install extra modules can be avoided. The parameters that are specific to the Process Regulator are parameter 437 to parameter 444.

■ PID functions

Unit of reference/feedback

When *Speed regulation, closed loop* is selected in parameter 100 *Configuration* the unit of reference/feedback is always rpm.
When *Process regulation, closed loop* is selected in parameter 100 *Configuration* the unit is defined in parameter 416 *Process units.*

Feedback
A feedback range must be preset for both regulators. At the same time this feedback range limits the potential reference range so that if the sum of all references lies outside the feedback range, the reference will be limited to lie within the feedback range.
The feedback signal must be connected to a terminal on the frequency converter. If feedback is selected on two terminals simultaneously, the two signals will be added together.
Use the overview below to determine which terminal is to be used and which parameters are to be programmed.

Feedback type	Terminal	Parameters
Pulse	33	307, 327
Voltage	53	308, 309, 310
Current	60	314, 315, 316

A correction can be made for loss of voltage in long signal cables when a transmitter with a voltage output is used. This is done in parameter group 300 *Min./Max scaling*.

Parameters 414/415 *Minimum/Maximum feedback* must also be preset to a value in the process unit corresponding to the minimum and maximum scaling values for signals that are connected to the terminal.

Reference
In parameter 205 *Maximum reference, Ref_{MAX}* it is possible to preset a maximum reference that scales the sum of all references, i.e. the resulting reference.
The minimum reference in parameter 204 is an expression of the minimum value that the resulting reference can assume.
All references will be added together and the sum will be the reference against which regulation will take place. It is possible to limit the reference range to a range that is smaller than the feedback range. This can be an advantage if you want to avoid an unintentional change to an external reference making the sum of the references move too far away from the optimal reference. The reference range cannot exceed the feedback range.
If preset references are desired, they are preset in parameters 215 to 218 *Preset reference*. See description *Reference Function* and *Handling of References*.
If a current signal is used as the feedback signal, it will only be possible to use voltage as an analogue reference. Use the overview below to determine which terminal is to be used and which parameters are to be programmed.

Reference type	Terminal	Parameters
Pulse	33	307, 327
Voltage	53	308, 309, 310
Current	60	314, 315, 316
Preset references		215-218
Bus reference	68+69	

Note that the bus reference can only be preset via serial communication.

NB!
It is best to preset terminals that are not being used to *No function* [0].

Differentiator gain limit
If very rapid variations occur in an application in either the reference signal or the feedback signal, the deviation between the reference/setpoint and the process's actual mode will change quickly. The differentiator can then become too dominant. This is because it is reacting to the deviation between the reference and the process's actual mode, and the quicker the var-

Programming

★ = factory setting, () = display text, [] = value for use in communication via serial communication port

iance changes the more powerful the differentiator's frequency contribution becomes. The differentiator's frequency contribution can therefore be limited in such a way that both a reasonable differentiation time for slow changes and an appropriate frequency contribution for quick changes can be preset. This is done using the speed regulation in parameter 420 *Speed PID Differentiator gain limit* and Process regulation in parameter 443 *Process PID Differentiator gain limit*.

Lowpass filter

If there is a lot of noise in the feedback signal, these can be dampened using an integrated lowpass filter. A suitable lowpass filter time constant is preset.

If the lowpass filter is preset to 0.1 s, the cut-off frequency will be 10 RAD/sec, corresponding to (10 / 2 x) = 1.6 Hz. This will mean that all currents/voltages that vary by more than 1.6 oscillations per second will be dampened. In other words, there will only be regulation on the basis of a feedback signal that varies by a frequency of less than 1.6 Hz. The appropriate time constant is selected in Speed Regulation in parameter 421 *Speed PID lowpass filter time* and in Process Regulation in parameter 444 *Process PID lowpass filter time*.

Inverse regulation

Normal regulation means that the motor speed is increased when the reference/setpoint is greater than the feedback signal. If it is necessary to run inverse regulation, in which the speed is reduced when the reference/setpoint is greater than the feedback signal, parameter 437 *PID normal/inverted control* must be programmed at *Inverted* .

Anti Windup

In the factory the process regulator is preset with an active anti windup function. This function means that when either a frequency limit, a current limit or a voltage limit is reached, the integrator is initialised at a frequency corresponding to the present output frequency. This is a means of avoiding the integration of a variance between the reference and the process's actual mode that cannot be deregulated by means of a change of speed. This function can be deselected in parameter 438 *Process PID anti windup*.

Starting conditions

In some applications the optimal setting of the process regulator will mean that a relatively long period of time will pass before the required process condition is achieved. In these applications it can be a good idea to define an output frequency to which the frequency converter must run the motor before the process regulator is activated. This is done by programming a start frequency in parameter 439 *Process PID start frequency*.

■ Handling of feedback

Feedback handling is depicted in this flowchart.

The flowchart shows which parameters can affect the handling of feedback and how. A choice can be made between voltage, current and pulse feedback signals.

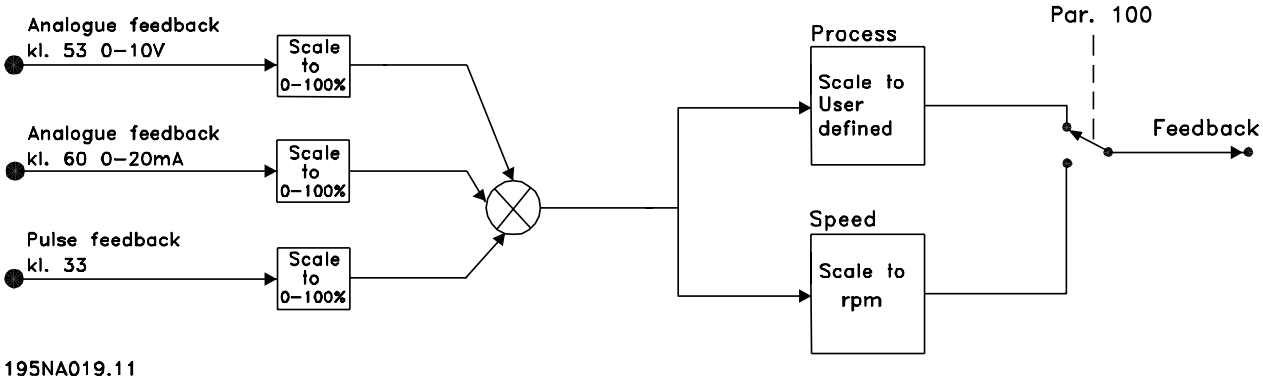

☆ = factory setting, () = display text, [] = value for use in communication via serial communication port

NB!
Parameters 417-421 are only used, if in parameter 100 *Configuration* the selection made is *Speed regulation, closed loop* [1].

417	Speed PID proportional gain (SPEED PROP GAIN)

Value:

0.000 (OFF) - 1.000 ★ 0.010

Function:

Proportional gain indicates how many times the fault (deviation between the feedback signal and the set-point) is to be amplified.

Description of choice:

Quick regulation is obtained at high amplification, but if the amplification is too high, the process may become unstable in the case of overshooting.

418	Speed PID integral time (SPEED int. time)

Value:

20.00 - 999.99 ms (1000 = OFF) ★ 100 ms

Function:

The integral time determines how long the PID regulator takes to correct the error. The greater the error, the quicker the integrator frequency contribution will increase. The integral time is the time the integrator needs to achieve the same change as the proportional amplification.

Description of choice:

Quick regulation is obtained through a short integral time. However, if this time is too short, it can make the process unstable. If the integral time is long, major deviations from the required reference may occur, since the process regulator will take long to regulate if an error has occurred.

419	Speed PID differential time (SPEED diff. time)

Value:

0.00 (OFF) - 200.00 ms ★ 20.00 ms

Function:

The differentiator does not react to a constant error. It only makes a contribution when the error changes. The quicker the error changes, the stronger the gain from the differentiator will be. The contribution is proportional to the speed at which errors change.

Description of choice:

Quick control is obtained by a long differential time. However, if this time is too long, it can make the process unstable. When the differential time is 0 ms, the D-function is not active.

420	Speed PID D- gain limit (SPEED D-GAIN LIM)

Value:

5.0 - 50.0 ★ 5.0

Function:

It is possible to set a limit for the gain provided by the differentiator. Since the D-gain increases at higher frequencies, limiting the gain may be useful. This enables obtaining a pure D-gain at low frequencies and a constant D-gain at higher frequencies.

Description of choice:

Select the required gain limit.

421	Speed PID lowpass filter time (speed filt. time)

Value:

20 - 500 ms ★ 100 ms

Function:

Noise in the feedback signal is dampened by a first order lowpass filter to reduce the noise's impact on the regulation. This might be an advantage, e.g. if there is a great amount of noise on the signal. See drawing.

★ = factory setting, () = display text, [] = value for use in communication via serial communication port

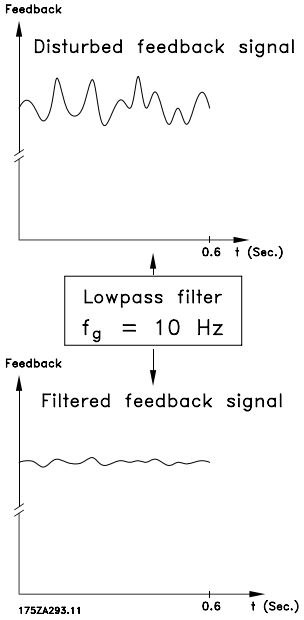

Description of choice:

If a time constant (t) of 100 ms is programmed, the cut-off frequency for the lowpass filter will be 1/0.1 = 10 RAD/sec., corresponding to (10 / 2 x π) = 1.6 Hz. The PID regulator will then only regulate a feedback signal that varies with a frequency of less than 1.6 Hz. If the feedback signal varies by a higher frequency than 1.6 Hz, it will be dampened by the lowpass filter.

---

423 U1 voltage
(U1 voltage)

Value:

0.0 - 999.0 V ★ par. 103

Function:

Parameters 423-428 are used when in parameter 101 *Torque characteristic* a selection has been made of *Special motor characteristic* [8]. It is possible to determine a U/f characteristic on the basis of four definable voltages and three frequencies. The voltage at 0 Hz is set in parameter 133 *Start voltage*.

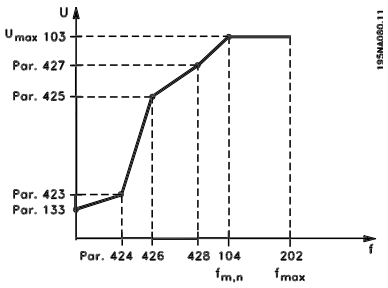

Description of choice:

Set the output voltage (U1) that is to match the first output frequency (F1), parameter 424 *F1 frequency*.

---

424 F1 frequency
(F1 frequency)

Value:

0.0 - par. 426 *F2 frequency* ★ Par. 104 *Motor frequency*

Function:

See parameter 423 *U1 voltage* .

Description of choice:

Set the output frequency (F1) that is to match the first output voltage (U1), parameter 423 *U1 voltage* .

---

425 U2 voltage
(U2 voltage)

Value:

0.0 - 999.0 V ★ par. 103

Function:

See parameter 423 *U1 voltage*.

Description of choice:

Set the output voltage (U2) that is to match the second output frequency (F2), parameter 426 *F2 frequency*.

---

426 F2 frequency
(F2 frequency)

Value:

Par. 424 *F1 frequency* - par. 428 *F3 frequency* ★ Par. 104 *Motor frequency*

Function:

See parameter 423 *U1 voltage*.

Description of choice:

Set the output frequency (F2) that is to match the second output voltage (U2), parameter 425 *U2 voltage* .

---

427 U3 voltage
(U3 voltage)

Value:

0.0 - 999.0 V ★ par. 103

★ = factory setting, () = display text, [] = value for use in communication via serial communication port

Function:

See parameter 423 *U1 voltage*.

Description of choice:

Set the output voltage (U3) that is to match the third output frequency (F3), parameter 428 *F3 frequency* .

428	F3 frequency
	(F3 frequency)

Value:

Par. 426 *F2 frequency* - ★ Par. 104 *Motor frequency*
1000 Hz

Function:

See parameter 423 *U1 voltage*.

Description of choice:

Set the output frequency (F3) that is to match the third output voltage (U3), parameter 427 *U3 voltage* .

NB!
Parameters 437-444 are only used if in parameter 100 *Configuration* a selection has been made of *Process regulation, closed loop.* [3].

437	Process PID normal/inverse control
	(proc no/inv ctrl)

Value:

★ Normal (normal)	[0]
Inverse (inverse)	[1]

Function:

It is possible to choose whether the process regulator is to increase/reduce the output frequency if there is a deviation between the reference/setpoint and the actual process mode.

Description of choice:

If the frequency converter is to reduce the output frequency in case the feedback signal increases, select *Normal* [0].If the frequency converter is to increase the output frequency in case the feedback signal increases, select *Inverse* [1].

438	Proces PID anti windup
	(proc anti windup)

Value:

Not active (DISABLE)	[0]
★ Active (ENABLE)	[1]

Function:

It is possible to select whether the process regulator is to continue regulating on a deviation even if it is not possible to increase/reduce the output frequency.

Description of choice:

The factory setting is *Enable* [1], which means that the integration link is initialised in relation to the actual output frequency if either the current limit, the voltage limit or the max./min. frequency has been reached. The process regulator will not engage again until either the error is zero or its sign has changed. Select *Disable* [0] if the integrator is to continue integrating on the deviation, even if it is not possible to remove the fault by such control.

NB!
If *Disable* [0] is selected, it will mean that when the deviation changes its sign, the integrator will first have to integrate down from the level obtained as a result of the former error, before any change in output frequency occurs.

Programming

★ = factory setting, () = display text, [] = value for use in communication via serial communication port

439 Process PID start frequency (PROC START VALUE)

Value:

f_{MIN} - f_{MAX} (parameter 201/202) ☆ Par. 201 *Output frequency, low limit, f_{MIN}*

Function:

When the start signal comes, the frequency converter will react in the form of *Open loop* and will not change to *Closed loop* until the programmed start frequency is reached. This makes it possible to set a frequency that corresponds to the speed at which the process normally runs, which will enable the required process conditions to be reached sooner.

Description of choice:

Set the required start frequency.

NB!
If the frequency converter is running a the current limit before the required start frequency is obtained, the process regulator will not be activated. For the regulator to be activated anyway, the start frequency must be lower to the required output frequency. This can be done during operation.
PID start frequency may not be set higher than f_{MIN} if using pipe fill mode.

440 Proces PID proportioanl gain (PROC. PROP. GAIN)

Value:

0.0 - 10.00 ☆ 0.01

Function:

The proportional gain indicates the number of times the deviation between the setpoint and the feedback signal is to be applied.

Description of choice:

Quick regulation is obtained by a high gain, but if the gain is too high, the process may become unstable due to overshoot.

441 Process PID integration time (PROC. INTEGR. T.)

Value:

0.01 - 9999.99 (OFF) ☆ OFF

Function:

The integrator provides an increasing gain at a constant error between the reference/setpoint and the feedback signal. The greater the error, the quicker the integrator frequency contribution will increase.The integral time is the time needed by the integrator to make the same change as the proportional gain.

Description of choice:

Quick regulation is obtained at a short integral time. However, this time may become too short, which can make the process unstable due to overswing. If the integral time is long, major deviations from the required setpoint may occur, since the process regulator will take a long time to regulate in relation to a given error.

442 Process PID differentiation time (PROC. DIFF. time)

Value:

0.00 (OFF) - 10.00 sec. ☆ 0.00 sec.

Function:

The differentiator does not react to a constant error. It only makes a gain when an error changes. The quicker the deviation changes, the stronger the gain from the differentiator. The gain is proportional to the speed at which the deviation changes.

Description of choice:

Quick regulation is obtained with a long differentiation time. However, this time may become too long, which can make the process unstable due to overswing.

443 Process PID diff. gain limit (PROC. DIFF.GAIN)

Value:

5.0 - 50.0 ☆ 5.0

Function:

It is possible to set a limit for the differentiator gain. The differentiator gain will increase if there are fast changes, which is why it can be beneficial to limit this gain. Thereby a pure differentiator gain is obtained at slow changes and a constant differentiator gain where quick changes to the deviation occur.

Description of choice:

Select a differentiator gain limit as required.

☆ = factory setting, () = display text, [] = value for use in communication via serial communication port

444 Process PID lowpass filter time (proc filter time)

Value:

0.02 - 10.00 ★ 0.02

Function:

Noise in the feedback signal is dampened by a first order lowpass filter to reduce the noise's impact on the process regulation. This can be an advantage e.g. if there is a lot of noise on the signal.

Description of choice:

Select the required time constant (t). If a time constant (t) of 0.1 s is programmed, the cut-off frequency for the lowpass filter will be 1/0.1 = 10 RAD/sec., corresponding to (10 / 2 x π) = 1.6 Hz. The process regulator will thus only regulate a feedback signal that varies by a frequency lower than 1.6 Hz. If the feedback signal varies by a higher frequency than 1.6 Hz, it will be dampened by the lowpass filter.

---

445 Flying start (flyingstart)

Value:

★ Off (DISABLE)	[0]
OK - same direction (OK-same direction)	[1]
OK - both directions (OK-both directions)	[2]
DC brake and start (DC-BRAKE BEF. START)	[3]

Function:

This function makes it possible to 'catch' a rotating motor shaft, which is no longer controlled by the frequency converter, e.g. because of a mains drop-out. The function is activated each time a start command is enabled. For the frequency converter to be able to 'catch' the rotating motor shaft, the motor speed must be lower than the frequency that corresponds to the frequency in parameter 202 *Output frequency, high limit, f_{MAX}* .

Description of choice:

Select *Disable* [0] if this function is not required.

Select *OK - same direction* [1] if the motor shaft is only able to rotate in the same direction when cutting in. *OK - same direction* [1] should be selected if in parameter 200 *Output frequency range* a selection has been of *Clockwise only* .

Select *OK - both directions* [2] if the motor is able to rotate in both directions when cutting in.

Select *DC brake and start* [3] if the frequency converter is to be able to brake the motor using the DC brake first, followed by start. It is assumed that parameters 126-127/132 *DC brake* are enabled. In the case of higher 'Windmilling' (rotating motor) effects, the frequency converter is not able to 'catch' a rotating motor without selecting *DC brake and start* .

Limitations:

- Too low inertia will lead to load acceleration, which can be dangerous or prevent correct catching of a rotating motor. Use the DC brake instead.
- If the load is driven, e.g. by 'Windmilling' (rotating motor) effects, the unit may cut out because of overvoltage.
- Flying start does not work at lower values than 250 rpm.

---

451 Speed PID feedforward factor (feedforward fact)

Value:

0 - 500 % ★ 100 %

Function:

This parameter is only active if in parameter 100 *Configuration* the selection made is *Speed regulation, closed loop*. The FF function sends a larger or smaller part of the reference signal outside the PID controller in such a way that the PID controller only has an influence on part of the control signal. Any change to the set point will thus have a direct effect on the motor speed. The FF factor provides high dynamism when changing the set point and less overswing.

Description of choice:

The required % value can be selected in the interval f_{MIN} - f_{MAX}. Values over 100 % are used if the set point variations are only small.

Programming

★ = factory setting, () = display text, [] = value for use in communication via serial communication port

452 Controller range (pid contr. range)

Value:

0 - 200 % ★ 10 %

Function:

This parameter is only active if in parameter 100 *Configuration* the selection made is *Speed regulation, closed loop*.
The controller range (bandwidth) limits the output from the PID controller as a % of motor frequency $f_{M,N}$.

Description of choice:

The required % value can be selected for motor frequency $f_{M,N}$. If the controller range is reduced the speed variations will be less during initial tuning.

455 Frequency range monitor (MON. FREQ. RANGE)

Value:

Disable [0]
★ Enable [1]

Function:

his parameter is used if warning 33 *Out of frequency range* must be turned off in the display in process control closed loop. This parameter does not affect the extended status word.

Description of choice:

Select *Enable* [1] to enable the readout in the display if warning 33 *Out of frequency range* occurs. Select *Disable* [0] to disable the readout in the display if warning 33 *ut of frequency range* occurs.

456 Brake Voltage Reduce (BRAKE VOL REDUCE)

Value:

0 - 25 V if 200V device ★ 0
0 - 50 V if 400V device ★ 0

Function:

The user sets the voltage by which the level for resistor braking is reduced. It is only active when resistor in parameter 400 is selected.

Description of choice:

The greater the reduction value, the faster the reaction to a generator overload. Should only be used if there are problems with overvoltage in the intermediate circuit.

457 Phase loss function (PHASE LOSS FUNCT)

Value:

★ Trip (TRIP) [0]
Autoderate & warning (AUTODERATE & WARNING) [1]
Warning (WARNING) [2]

Function:

Select the function which is to be activated if the mains imbalance becomes too high or if a phase is missing.

Description of choice:

At *Trip* [0] the frequency converter will stop the motor within a few seconds (depending on drive size).
If *Autoderate & warning* [1] is selected, the drive will export a warning and reduce the output current to 50 % of $I_{VLT,N}$ to maintain operation.
At *Warning* [2] only a warning will be exported when a mains failure occurs, but in severe cases, other extreme conditions might result in a trip.

NB!
If *Warning* has been selected, the life expectancy of the drive will be reduced when the mains failure persists.

461 Feedback conversion (FEEDBAC CONV.)

Value:

★ Linear (LINEAR) [0]
Square root (SQUARE ROOT) [1]

Function:

In this parameter, a function is selected which converts a connected feedback signal from the process to a feedback value that equals the square root of the connected signal. This is used, e.g. where regulation of a flow (volume) is required on the basis of pressure as feedback signal (flow = constant x $\sqrt{pressure}$). This conversion makes it possible to set the reference in such a way that there is a linear connection between the reference and the flow required.

★ = factory setting, () = display text, [] = value for use in communication via serial communication port

Description of choice:

If *Linear* [0] is selected, the feedback signal and the feedback value will be proportional. If *Square root* [1] is selected, the frequency converter translates the feedback signal to a squared feedback value.

Enhanced Sleep Mode

The enhanced sleep mode has been developed to work under all conditions and to overcome problems when using pumps with flat pump curves or when suction pressure varies. Enhanced sleep mode provides excellent control for shutting down the pump at low flow, thus saving energy.

If operating with constant pressure control in the SYSTEM, for instance a drop in the suction pressure will lead to an increase in frequency to maintain pressure. Consequently there is a situation, where the frequency will vary independent of the flow. This can lead to inappropriate activation of sleep mode or wake-up of the frequency converter.

Flat pump curves leads to a situation where there will be little or no change in frequency in response to flow variation. Consequently, the frequency converter might not reach the sleep frequency when setting it at a low value.

Enhanced sleep mode is based on power/frequency monitoring and works in closed loop only. Stop due to the enhanced sleep mode function is initiated under the following conditions:

- Power consumption is below the no/low flow power curve and stays there for a certain time (parameter 462 *Enhanced sleep mode timer*) **or**
- The pressure feedback is above the reference when running at minimum speed and stays there for a certain time (parameter 462 *Enhanced sleep mode timer*).

If the feedback pressure falls below the wakeup pressure (Parameter 464 *Wakeup pressure*), the frequency converter restarts the motor.

Dry Run Detection

For most pumps, especially submersible bore-hole pumps, it must be assured that the pump is stopped in case of dry run. This is assured by the Dry run detection feature.

How Does It Work?

Dry run detection is based on power/frequency monitoring and works in both closed and open loop.

Stop (trip) due to dry run is initiated under following conditions:

Closed loop:

- The frequency converter is running at maximum frequency (parameter 202 *Output frequency high limit*, f_{MAX}) **and**
- Feedback is below minimum reference (parameter 204 *Minimum reference*, $Ref_{,MIN}$) **and**
- Power consumption is below the no/low flow power curve for a certain time (parameter 470 *Dry run time out*)

Open loop:

- Whenever the power consumption is below the no/low flow power curve for a certain time (parameter 470 *Dry run time out*) the frequency converter will trip.

The frequency converter can be set up for either manual or automatic restart after stop (parameters 405 *Reset function* and 406 *Automatic restart time*).

- Enhanced Sleep Mode and Dry Run Detection can be enabled and disabled independently. This is done in parameter 462 *Enhanced sleep mode timer* and parameter 470 *Dry run time out*.

Centrifugal pumps with radial impellers show a clear one-to-one relation between power consumption and flow, which is utilized to detect a no or low flow situation.

It is only necessary to enter two sets of values for power and frequency (min and max) at no or low flow. The frequency converter then automatically calculates all data in-between those two sets of values and generates the no/low flow power curve.

If the power consumption falls below the power curve, the frequency converter enters Sleep-mode or trips due to dry run, depending on the configuration.

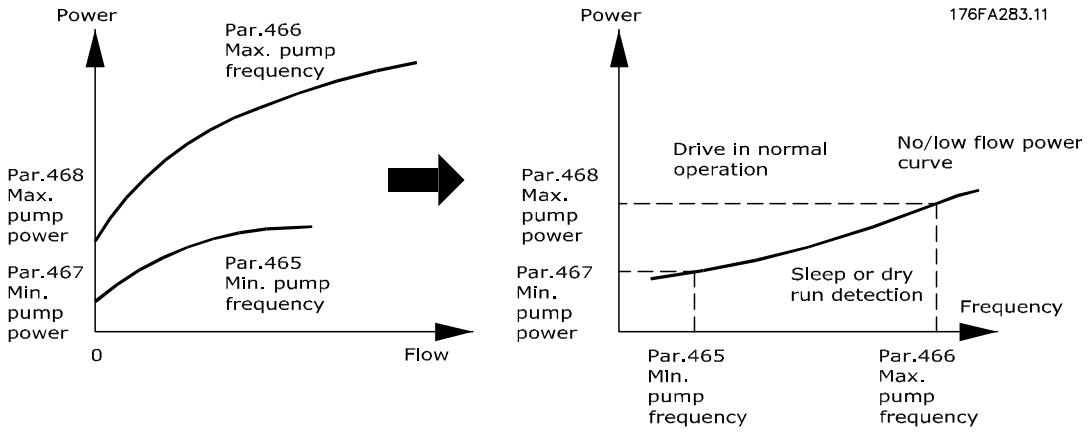

- Dry run protection. Shuts down at no or low flow and protects the motor and pump from overheating.
- Improved energy savings with Enhanced sleep mode.
- Minimized risk of bacterial growth in drinking water because of insufficient motor cooling.
- Easy commissioning.

Only centrifugal pumps with radial impeller show a clear one to one relationship between flow and power. Consequently proper functionality of the Enhanced Sleep Mode and Dry Run Detection is only given for this type of pump.

462	Enhanced Sleep Mode Timer (ESL timer)

Value:

Value 0 – 9999 sec. ☆ 0 = OFF

Function:

The timer prevents cycling between Sleep mode and normal operation. If for instance the power consumption falls below the no/low flow power curve the frequency converter will change mode when the timer expires.

Description of choice:

In case of cycling, set the timer to an appropriate value that limits the number of cycles.
The value 0 disables Enhanced sleep mode.
Note: In parameter 463 *Boost set point* it is possible to set up the frequency converter to provide a pressure boost before the pump is stopped.

463	Boost setpoint (BOOST SETPOINT)

Value:

1 - 200 % ☆ 100 % of setpoint

Function:

This function can only be used if *Closed loop* has been selected in parameter 100.
In systems with constant pressure regulation, it is advantageous to increase the pressure in the system before the frequency converter stops the motor. This extends the time during which the frequency converter stops the motor and helps to avoid frequent starting and stopping of the motor, e.g. in the case of leaks in the water supply system.

There is a fixed boost time-out on 30 sec. in case the boost setpoint cannot be reached.

Description of choice:

Set the required *Boost setpoint* as a percentage of the resulting reference under normal operation. 100% corresponds to the reference without boost (supplement).

Programming

☆ = factory setting, () = display text, [] = value for use in communication via serial communication port

464	Wakeup Pressure
	(Wakeup Pressure)

Value:

Par. 204 Ref_{MIN} – par. 215 - 218 Setpoint ✯ 0

Function:

When in Sleep mode the frequency converter will wake up when the pressure is below the Wakeup pressure for the time set in parameter 462 *Enhanced sleep mode timer*.

Description of choice:

Set an appropriate value for the system. The unit is set in parameter 416.

465	Minimum pump frequency
	(Pump min. freq.)

Value:

Value par. 201 f_{MIN} – par. 202 f_{MAX} (Hz) ✯ 20

Function:

This parameter is linked to parameter 467 *Minimum Power* and is used for no/low flow power curve.

Description of choice:

Enter a value equal or close to the desired minimum frequency set in parameter 201 *Output frequency low limit, f_{MIN}* . Please note, that the extension of the no/low flow power curve is limited by parameters 201 and 202 and not by parameters 465 and 466.

466	Maximum Pump Frequency
	(Pump max. freq)

Value:

Value par. 201 f_{MIN} - par. 202 f_{MAX} (Hz) ✯ 50

Function:

This parameter is linked to parameter 468 *Maximum pump power* and is used for the no/low flow power curve.

Description of choice:

Enter a value equal or close to the desired maximum frequency set in parameter 202 *Output frequency high limit, f_{MAX}* .

467	Minimum Pump Power
	(Min. pump power)

Value:

0 – 500.000 W ✯ 0

Function:

The associated power consumption at the frequency entered in parameter 465 *Minimum pump frequency*.

Description of choice:

Enter the no/low flow power reading at minimum pump frequency entered in parameter 465.

Depending on pump size or curve select W or kW in par. 009 index [32] and [8] for fine tuning.

468	Maximum Pump Power
	(Max. pump power)

Value:

0 – 500.000 W ✯ 0

Function:

The associated power consumption at the frequency entered in parameter 466 *Minimum pump frequency*.

Description of choice:

Enter the no/low flow power reading at maximum pump frequency entered in parameter 466.

Depending on pump size or curve select W or kW in par. 009 index [32] and [8] for fine tuning.

469	No Flow Power Compensation
	(NF power comp)

Value:

0.01 - 2 ✯ 1.2

Function:

This function is used for an off-set of the no/low flow power curve, which can be used as a safety factor or for fine tuning of the system.

Description of choice:

Description The factor is multiplied to the power values. E.g. 1.2 will increase the power value with 1.2 over the whole frequency range.

✯ = factory setting, () = display text, [] = value for use in communication via serial communication port

470	Dry Run Time Out
	(DRY RUN TIME OUT)

Value:

5-30 sec. ★ 31 = OFF

Function:

If the power is below the no/low flow power curve, running at max speed for the time set in this parameter, the frequency converter will trip on Alarm 75: Dry run. In open loop operation the maximum speed does not necessarily need to be reached before tripping.

Description of choice:

Set the value to obtain the desired delay before tripping. Manual or automatic restart can be programmed in parameter 405 *Reset function* and 406 *automatic restart time*.

The value 30 disables Dry run detection.

471	Dry Run Interlock Timer
	(Dry run int time)

Value:

0.5-60 min. ★ 30 min.

Function:

This timer determines when a trip due to dry run can be automatically reset. When the timer expires, the automatic reset of the trip can automatically restart the frequency converter again.

Description of choice:

Parameter 406 *Automatic restart time* still determines how frequent an attempt to reset a trip will be performed. If for instance parameter 406 *Automatic restart time* is set to 10 sec. and parameter 405 *Reset function* is set to Automatic Reset x10 the frequency converter will attempt to reset the trip 10 times within 100 seconds. If parameter 471 is set to 30 min. the frequency converter will consequently not be able to perform automatic reset of dry run trip and will need a manual reset.

484	Initial ramp
	(INITIAL RAMP)

Value:

OFF/000.1s - 360.0 s ★ OFF

Function:

Allows the motor/equipment to be brought up to minimum speed (frequency) at a rate different than the normal Ramp-Up rate (param. 207).

Description of choice:

As an example, vertical pumps and other equipment often have a requirement to not operate below a minimum speed any longer than necessary. Damage and excessive wear can occur when operating below minimum speed (frequency) for too long a period of time. The Initial Ramp is used to quickly accelerate the motor/equipment to minimum speed at which point, the normal Ramp-Up rate (parameter 207) is made active. The range of adjustment of the Initial Ramp is from 000.1 second to 360.0 seconds; adjustable in 0.1 second increments. If this parameter is set to 000.0, OFF is displayed in this parameter, the Initial Ramp is not active, and the normal Ramp-Up is active.

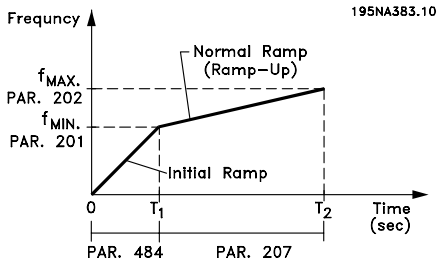

■ Fill Mode

Fill Mode eliminates the occurrence of water hammer associated with the rapid exhausting of air from piping systems (such as Irrigation systems).

The frequency converter, set for Closed Loop operation uses an adjustable Fill Rate, a "Filled Pressure" setpoint, an operating pressure setpoint, and a pressure feedback.

Fill Mode is available when:

- The VLT 2800 drive is in **Closed Loop** mode (parameter 100).
- Parameter 485 is **not 0**
- Parameter 437 is set to **NORMAL**

After a start command, Fill Mode operation begins when the frequency converter reaches minimum frequency - set in parameter 201.

Programming

★ = factory setting, () = display text, [] = value for use in communication via serial communication port

The "Filled" Setpoint - parameter 486- is actually a setpoint limit. When minimum speed is reached, the pressure feedback is looked at, and the frequency converter begins to ramp to the "Filled" pressure setpoint at the rate established by Fill Rate parameter 485.

The Fill Rate - parameter 485- is dimensioned in Units/Second. The Units will be the units selected in parameter 416.

When the pressure feedback equals the "Filled" Setpoint, the control transitions to the operating setpoint (Setpoint 1-4, param. 215-218) and continues operation in standard (normal) "closed loop" mode.

The value to use for the "Filled" Setpoint parameter 486, can be determined by:

1. Use the DISPLAY MODE key on the LCP to display **FEEDBACK 1**.
   IMPORTANT! Be sure that you have selected the UNITS in parameter 416 before this step.
2. Operate the VLT 2800 in **HAND** mode and slowly advance the speed to fill the pipe while being careful not to create a water hammer.
3. An observer at the end of the pipe must be able to report when the pipe is filled.
4. At that instant, stop the motor, and observe the value of pressure feedback (have the LCP display set to observe the feedback before starting).
5. The value of feedback in step 4) is the value to use in parameter 486 - "Filled" Setpoint.

The value to set in parameter 485- Fill Rate can be supplied by the system engineer from proper calculation or from experience, or it can be determined experimentally by performing numerous fill mode sequences and either increasing or decreasing the value of this parameter to obtain the fastest fill without causing a water hammer.

The **Fill Mode** is also beneficial when bringing the motor to a stop as it prevents sudden changes in pressure and flow which could also cause a water hammer.

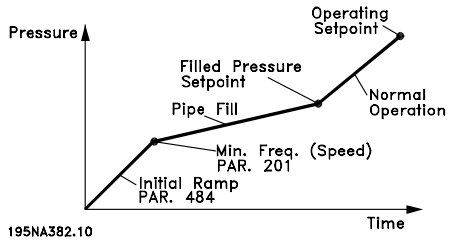

485	Fill Rate
	(FILL RATE)

Value:

OFF/000000.001 - 999999.999 (units/s) - ☆ OFF

Function:

Establishes the rate at which the pipe is filled.

Description of choice:

The dimension of this parameter is Units/Second. The Units will be the value selected in parameter 416. As an example, the Units could be Bar, or MPa, or PSI, etc. If Bar is the selected unit in parameter 416, then the number set in this parameter (485) would be dimensioned as Bar/Second. Changes to this parameter can be made in steps of .001 units.

486	Filled Setpoint
	(FILLED SETPOINT)

Value:

Param. 414 - Param. 205 - ☆ Param. 414

Function:

The value set in this parameter corresponds to the pressure that exists at the pressure sensor when the pipe is filled.

Description of choice:

The Units of this parameter correspond to the units selected in Parameter 416. The minimum value of this parameter is Fb_{min} (param. 414). The maximum value for this parameter is Ref_{max} (param. 205). The setpoint can be changed in .01 steps.

☆ = factory setting, () = display text, [] = value for use in communication via serial communication port

Serial communication for VLT 2800

Protocols

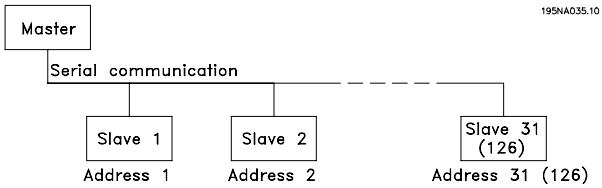

All frequency converters are equipped with an RS 485 port as standard, which makes it possible to choose between two protocols. The two protocols that can be selected in parameter 512 *Telegram Profile* , are:

- Profidrive protocol
- Danfoss FC protocol

To select Danfoss FC protocol, parameter 512 *Telegram Profile* is set to *FC protocol* [1].

Telegram Traffic

Control and response telegrams

Telegram traffic in a master-slave SYSTEM is controlled by the master. A maximum of 31 slaves can be connected to a master, unless repeaters are used. If repeaters are used, a maximum of 126 slaves can be connected to a master.

The master constantly sends telegrams addressed to the slaves and waits for response telegrams from them. The slave's response time is a maximum of 50 ms.

Only a slave that has received an error-free telegram, addressed to that slave can send a response telegram.

Broadcast

A master can send the same telegram simultaneously to all slaves connected to the bus. During this broadcast communication the slave does not send any response telegrams back to the master as to whether the telegram has been correctly received. Broadcast communication is set up in address format (ADR), see *Telegram structure*.

Content of a character (byte)

Each character transferred begins with a start bit. Then 8 data bits are transferred, corresponding to a byte. Each character is secured via a parity bit, which is set at "1" when it reaches parity (i.e. when there is an equal number of 1's in the 8 data bits and the parity bit in total). A character is completed by a stop bit, thus consisting of 11 bits in all.

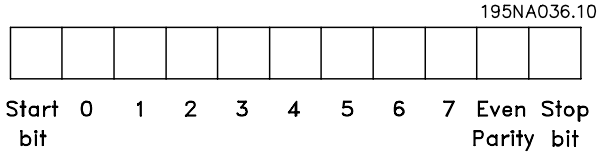

Telegram Structure

Each telegram begins with a start character (STX) = 02 Hex, followed by a byte that denotes the length of the telegram (LGE) and a byte that denotes the address of the frequency converter (ADR). Then follows a number of data bytes (variable, depending on the type of telegram). The telegram is completed by a data control byte (BCC).

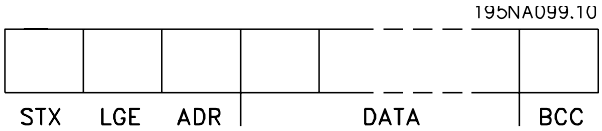

Telegram timing

The communication speed between a master and a slave depends on the baud rate. The frequency converter's baud rate must be the same as the master's baud rate and be selected in parameter 501 *Baudrate*.

After a response telegram from the slave, there must be a pause of at least 2 characters (22 bits) before the master can send a new telegram. At a baud rate of 9600 baud there must be a pause of at least 2.3 ms. When the master has completed the telegram, the slave's response time back to the master will be a maximum of 20 ms, and there will be pause of at least 2 characters.

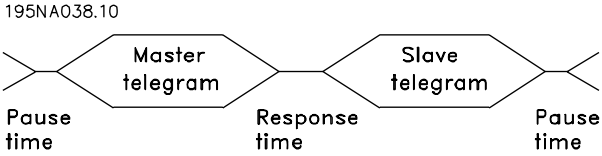

Pause time, min: 2 characters

Response time, min: 2 characters

Response time, max: 20 ms

The time between the individual characters in a telegram may not exceed 2 characters and the telegram must be completed within 1.5 x nominal telegram time. At a baud rate of 9600 baud and a telegram length of 16 bytes the telegram will be completed after 27.5 msec.

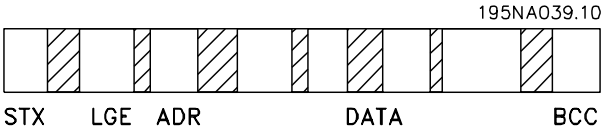

= Time between characters

Telegram length (LGE)

The telegram length is the number of data bytes plus the address byte ADR plus the data control byte BCC.

The length of telegrams with 4 data bytes is:
LGE = 4 + 1 + 1 = 6 bytes
The length of telegrams with 12 data bytes is:
LGE = 12 + 1 + 1 = 14 bytes
The length of telegrams containing texts is 10+n bytes. 10 represents the fixed characters, while the 'n' is variable (depending on the length of the text).

Frequency converter address (ADR)

Two different address formats are used, with the frequency converter's address range being either 1-31 or 1-126.

1. Address format 1-31
The byte for address range 1-31 has the following profile:

7	6	5	4	3	2	1	0
0	X						

195NA040.10

Bit 7 = 0 (address format 1-31 active)

Bit 6 is not used

Bit 5 = 1: Broadcast, address bits (0-4) are not used

Bit 5 = 0: No Broadcast

Bit 0-4 = Frequency converter address 1-31

2. Address format 1-126
The byte for address range 1 - 126 has the following profile:

7	6	5	4	3	2	1	0
1							

195NA041.10

Bit 7 = 1 (address format 1-126 active)

Bit 0-6 = Frequency converter address 1-126

Bit 0-6 = 0 Broadcast

The slave sends the address byte back unchanged in the response telegram to the master.

Example:
writing to frequency converter address 22 (16H) with address format 1-31:

7	6	5	4	3	2	1	0
0	0	0	1	0	1	1	0

195NA042.10

Data control byte (BCC)

The data control byte is explained in this example:
Before the first byte in the telegram is received, the Calculated CheckSum (BCS) is 0.

7	6	5	4	3	2	1	0
0	0	0	0	0	0	0	0

195NA043.10

When the first byte (02H) has been received:
BCS = BCC EXOR “first byte”
(EXOR = exclusive-or)

BCS	= 0 0 0 0 0 0 0 0 (00 H)
	EXOR
1. byte	= 0 0 0 0 0 0 1 0 (02H)
BCC	= 0 0 0 0 0 0 1 0 (02H)

Each subsequent byte gates with BCS EXOR and produces a new BCC, e.g.:

BCS	= 0 0 0 0 0 0 1 0 (02H)
	EXOR
2nd byte	= 1 1 0 1 0 1 1 0 (D6H)
BCC	= 1 1 0 1 0 1 0 0 (D4H)

■ Data Character (byte)

The structure of data blocks depends on the type of telegram. There are three types of telegram, and the type of telegram applies for both control telegrams (masterslave) and response telegrams (slavemaster). The three types of telegram are:

- Parameter block, used to transfer parameters between master and slave. The data block is made up of 12 bytes (6 words) and also contains the process block.

195NA044.10

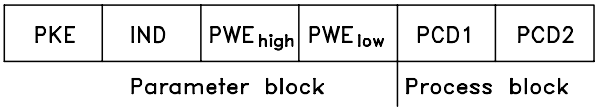

- The process block is made up of a data block of four bytes (2 words) and contains:
  - Control word and reference value
  - Status word and present output frequency (from slave to master)

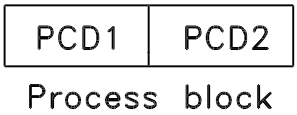

- Text block, which is used to read or write texts via the data block.

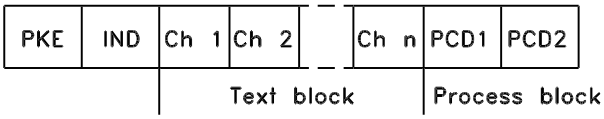

Parameter commands and responses (AK).

195NA046.10

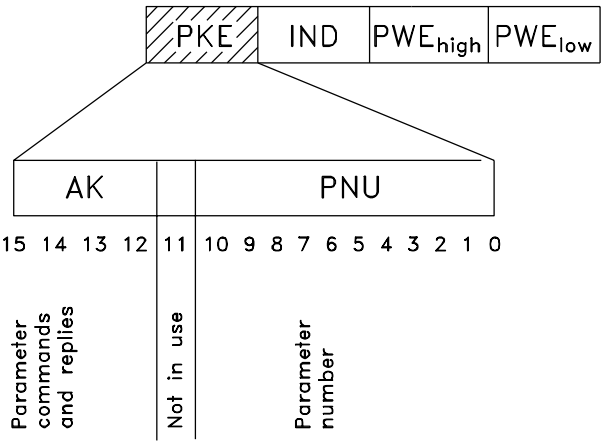

Bits no. 12-15 are used to transfer parameter commands from master to slave and the slave's processed responses back to the master.

Parameter commands masterslave				
Bit no.				
15	14	13	12	Parameter command
0	0	0	0	No command
0	0	0	1	Read parameter value
0	0	1	0	Write parameter value in RAM (word)
0	0	1	1	Write parameter value in RAM (double word)
1	1	0	1	Write parameter value in RAM and EEprom (double word)
1	1	1	0	Write parameter value in RAM and EEprom (word)
1	1	1	1	Read/write text

Response slavemaster				
Bit no.				Response
15	14	13	12	
0	0	0	0	No response
0	0	0	1	Parameter value transferred (word)
0	0	1	0	Parameter value transferred (double word)
0	1	1	1	Command cannot be performed
1	1	1	1	Text transferred

If the command cannot be performed the slave sends this response: 0111 *Command cannot be performed* and gives the following fault report in the parameter value (PWE):

Response (0111)	Fault report
0	The parameter number used does not exist
1	There is no write access to the defined parameter
2	Data value exceeds the parameter's limits
3	The sub index used does not exist
4	The parameter is not the array type
5	The data type does not match the defined parameter
17	Data change in the defined parameter is not possible in the frequency converter's present mode. Certain parameters can only be changed when the motor is turned off
130	There is no bus access to the defined parameter
131	Data change is not possible because factory Setup is selected

Parameter number (PNU)

Bits no. 0-10 are used to transfer parameter numbers. The relevant parameter's function is defined in the parameter description in the section entitled *Programming*.

Index

PKE	IND	PWE_{high}	PWE_{low}

Index is used together with the parameter number to read/write-access parameters that have an index, e.g. parameter 615 *Error code* . The index is made up of 2 bytes, one lowbyte and one highbyte, but only the lowbyte is used as an index.

Example - Index:

The first error code (index [1]) in parameter 615 *Error code* must be read.

PKE = 1267 Hex (read parameter 615 *Error code*.)

IND = 0001 Hex - Index no. 1.

1267 H	0001 H		
PKE	IND	PWE	

The frequency converter will respond in the parameter value block (PWE) with a fault code value from 1 - 99. See *Summary of Warnings and Alarms* to identify the fault code.

Parameter value (PWE)

PKE	IND	PWE_{high}	PWE_{low}

The parameter value block consists of 2 words (4 bytes), and the value depends on the defined command (AK). If the master prompts for a parameter value, the PWE block does not contain a value.

If you wish the master to change a parameter value (write), the new value is written in the PWE block and sent to the slave.

If the slave responds to a parameter request (read command), the present parameter value in the PWE block is transferred and returned to the master.

If a parameter contains not a numerical value, but several data options, e.g. parameter 001 *Language* where [0] corresponds to *English* , and [3] corresponds to *Danish*, the data value is selected by entering the value in the PWE block. See *Example - Selecting a data value*.

Via serial communication it is only possible to read parameters that have data type 9 (text string). Parameter 621 - 635 *Nameplate data* is data type 9. For example, in parameter 621 *Unit type* it is possible to read the unit size and mains voltage range.

When a text string is transferred (read) the length of the telegram is variable, as the texts are of different lengths. The telegram length is defined in the telegram's second byte, known as LGE.

To be able to read a text via the PWE block the parameter command (AK) must be set to 'F' Hex.

The index character is used to indicate whether it is a read or write command.

In a read command the index must have the following format:

04	00 H
Highbyte	Lowbyte
IND	

Some frequency converters have parameters to which a text may be written. To be able to write a text via the PWE block the parameter command (AK) must be set to 'F' Hex.

For a write command the text must have the following format:

05	00 H
Highbyte	Lowbyte
IND	

Data types supported by frequency transformer:

Data types	Description
3	Integer 16
4	Integer 32
5	Unsigned 8
6	Unsigned 16
7	Unsigned 32
9	Text string

Unsigned means that there is no operational sign in the telegram.

Example - Write a parameter value:

Parameter 202 *Output frequency high limit,* f_{MAX} to be changed to 100 Hz. The value must be recalled after a mains failure, so it is written in EEPROM.

PKE = E0CA Hex - Write for parameter 202 *Output frequency high limit,* f_{MAX}

IND = 0000 Hex

PWE_{HIGH} = 0000 Hex

PWE_{LOW} = 03E8 Hex - Data value 1000, corresponding to 100 Hz, see conversion.

E0CA H	0000 H	0000 H	03E8 H
PKE	IND	PWE_{high}	PWE_{low}

The response from the slave to the master will be:

PKE	IND	PWE_{high}	PWE_{low}
10CA H	0000 H	0000 H	03E8 H

Example - Selection of a data value:
You wish to select kg/hour [20] in parameter 416 *Process units*. The value must be recalled after a mains failure, so it is written in EEPROM.

PKE = E19F Hex - Write for parameter 416 *Process units*

IND = 0000 Hex

PWE_{HIGH} = 0000 Hex

PWE_{LOW} = 0014 Hex - Select data option kg/hour [20]

PKE	IND	PWE_{high}	PWE_{low}
E1A0 H	0000 H	0000 H	0014 H

The response from the slave to the master will be:

PKE	IND	PWE_{high}	PWE_{low}
11A0 H	0000 H	0000 H	0014 H

Example - Reading a parameter value:
The value in parameter 207 *Ramp up time 1* is required.
The master sends the following request:

PKE = 10CF Hex - read parameter 207 *Ramp up time 1*

IND = 0000 Hex

PWE_{HIGH} = 0000 Hex

PWE_{LOW} = 0000 Hex

PKE	IND	PWE_{high}	PWE_{low}
10CF H	0000 H	0000 H	0000 H

If the value in parameter 207 *Ramp-up time 1* is 10 sec., the response from the slave to the master will be:

PKE	IND	PWE_{high}	PWE_{low}
10CF H	0000 H	0000 H	000A H

Conversion:
Under the section entitled *Factory Settings* the various attributes of each parameter are displayed. As a parameter value can only be transferred as a whole number, a conversion factor must be used to transfer decimals.

Example:
Parameter 201 *Output frequency, low limit* f_{MIN} has a conversion factor of 0.1. If you wish to preset the minimum frequency to 10 Hz, the value 100 must be transferred, as a conversion factor of 0.1 means that the value transferred is multiplied by 0.1. The value 100 will thus be perceived as 10.0.

Conversion table

Conversion index	Conversion factor
73	0.1
2	100
1	10
0	1
-1	0.1
-2	0.01
-3	0.001
-4	0.0001
-5	0.00001

■ Process Words

The block of process words is divided into two blocks of 16 bits, which always occur in the defined sequence.

195NA066.10

PCD1	PCD2

	PCD 1	PCD 2
Control telegram (masterslave)	Control word	Reference-value
Control telegram (slavemaster)	Status word	Present outp. frequency

■ Control Word according to FC protocol

To select *FC protocol* in the control word, parameter 512 *Telegram Profile* must be set to *FC protocol* [1].

The control word is used to send commands from a master (e.g. a PC) to a slave (frequency converter).

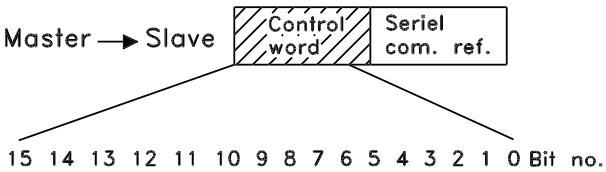

Programming

Bit	Bit = 0	Bit =1
00		Preset ref. lsb
01		Preset ref. msb
02	DC braking	
03	Coasting stop	
04	Quick stop	
05	Freeze outp. freq.	
06	Ramp stop	Start
07		Reset
08		Jog
09	Ramp 1	Ramp 2
10	Data not valid	Data valid
11	No function	Relay 01 activated
12	No function	Digital output Terminal 46 activated
13	Select Setup, lsb	
14	Select Setup, msb	
15		Reversing

Bit 00/01:
Bit 00/01 is used to select between the two pre-programmed references (parameters 215-218 *Preset reference*) according to the following table:

Preset ref.	Parameter	Bit 01	Bit 00
1	215	0	0
2	216	0	1
3	217	1	0
4	218	1	1

NB!
In parameter 508 *Selection of preset reference* a selection is made to define how Bit 00/01 gates with the corresponding function on the digital inputs.

Bit 02, DC brake:
Bit 02 = '0' causes DC braking and stop. Brake voltage and duration are preset in parameters 132 *DC brake voltage* and parameter 126 *DC braking time*. Note: In parameter 504 *DC brake* a selection is made to define how Bit 02 gates with the corresponding function on a digital input.

Bit 03, Coasting stop:
Bit 03 = '0' causes the frequency converter to immediately "let go" of the motor (the output transistors are "shut off"), so that it coasts to a standstill.
Bit 03 = '1' causes the frequency converter to be able start the motor if the other starting conditions have been fulfilled. Note: In parameter 502 *Coasting stop* a selection is made to define how Bit 03 gates with the corresponding function on a digital input.

Bit 04, Quick stop:
Bit 04 = '0' causes a stop, in which the motor's speed is ramped down to stop via parameter 212 *Quick stop ramp-down time*.

Bit 05, Freeze output frequency:
Bit 05 = '0' causes the present output frequency (in Hz) to freeze. The frozen output frequency can now only be changed by means of the digital inputs programmed to *Speed up* and *Speed down*.

NB!
If *Freeze output* is active, the frequency converter cannot be stopped via Bit 06 *Start* or via a digital input. The frequency converter can only be stopped by the following:

- Bit 03 Coasting stop
- Bit 02 DC braking
- Digital input programmed to *DC braking*, *Coasting stop* or *Reset and coasting stop*.

Bit 06, Ramp stop/start:
Bit 06 = '0' causes a stop, in which the motor's speed is ramped down to stop via the selected *ramp down* parameter.
Bit 06 = '1' causes the frequency converter to be able to start the motor, if the other starting conditions have been fulfilled. Note: In parameter 505 *Start* a selection is made to define how Bit 06 Ramp stop/start gates with the corresponding function on a digital input.

Bit 07, Reset:
Bit 07 = '0' does not cause a reset.
Bit 07 = '1' causes the reset of a trip. Reset is activated on the signal's leading edge, i.e. when changing from logic '0' to logic '1'.

Bit 08, Jog:
Bit 08 = '1' causes the output frequency to be determined by parameter 213 *Jog frequency*.

Bit 09, Selection of ramp 1/2:
Bit 09 = “0” means that ramp 1 is active (parameters 207/208). Bit 09 = “1” means that ramp 2 (parameters 209/210) is active.

Bit 10, Data not valid/Data valid:
Is used to tell the frequency converter whether the control word is to be used or ignored. Bit 10 = '0' causes the control word to be ignored, Bit 10 = '1' causes the control word to be used. This function is relevant, because the control word is always contained in the telegram, regardless of which type of telegram is used,

i.e. it is possible to turn off the control word if you do not wish to use it in connection with updating or reading parameters.

Bit 11, Relay 01:
Bit 11 = “0” Relay not activated.
Bit 11 = “1” Relay 01 activated, provided *Control word bit* has been chosen in parameter 323.

Bit 12, Digital output, terminal 46:
Bit 12 = “0” Digital output has not been activated.
Bit 12 = “1” Digital output has been activated, provided *Control word bit* has been chosen in parameter 341.

Bit 13/14, Selection of Setup:
Bits 13 and 14 are used to choose from the four menu Setups according to the following table:

Setup	Bit 14	Bit 13
1	0	0
2	0	1
3	1	0
4	1	1

The function is only possible when *Multi-Setups* is selected in parameter 004 *Active Setup* .
Note: I parameter 507 *Selection of Setup* a selection is made to define how Bit 13/14 gates with the corresponding function on the digital inputs.

Bit 15 Reversing:
Bit 15 = '0' causes no reversing.
Bit 15 = '1' causes reversing.
Note: In the factory setting reversing is set to *digital* in parameter 506 *Reversing*. Bit 15 only causes reversing when either *Ser. communication* , *Logic or* or *Logic and* is selected.

■ Status Word according to FC Profile

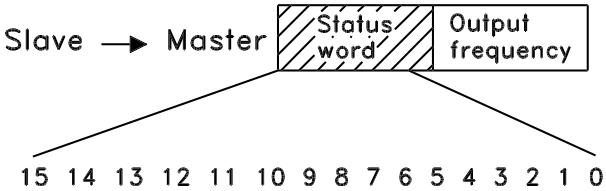

The status word is used to inform the master (e.g. a PC) of the slave's (frequency converter) mode. Slave•Master.

Bit	Bit = 0	Bit =1
00		Control ready
01		Drive ready
02	Coasting stop	
03	No trip	Trip
04	Not used	
05	Not used	
06		Trip lock
07	No warning	Warning
08	Speed • ref.	Speed = ref.
09	Local control	Ser. communi.
10	Outside frequency range	Frequency limit OK
11		Motor running
12		
13		Voltage warn.
14		Current limit
15		Thermal warn.

Bit 00, Control ready:
Bit 00 = '1'. The frequency converter is ready for operation.
Bit 00 = '0'. The frequency converter is not ready for operation.

Bit 01, Drive ready:
Bit 01 = '1'. The frequency converter is ready for operation, but there is an active coasting command via the digital inputs or via serial communication.

Bit 02, Coasting stop:
Bit 02 = '0'. The frequency converter has released the motor.
Bit 02 = '1'. The frequency converter can start the motor when a start command is given.

Bit 03, No trip/trip:
Bit 03 = '0' means that the frequency converter is not in fault mode.
Bit 03 = '1' means that the frequency converter is tripped, and that it needs a reset signal for operation to be reestablished.

Bit 04, Not used:
Bit 04 is not used in the status word.

Bit 05, Not used:
Bit 05 is not used in the status word.

Bit 06, Trip lock:
Bit 06 = '0' means that the frequency converter is not trip locked.
Bit 06 = '1' means that the frequency converter is trip locked and it cannot be reset before the mains supply has been removed. The trip can be reset either with 24 V external control back up or after the power is connected again.

Bit 07, No warning/warning:
Bit 07 = '0' means that there are no warnings.
Bit 07 = '1' means that a warning has occurred.

Bit 08, Speed• ref/speed = ref.:
Bit 08 = '0' means that the motor is running, but that the present speed is different from the preset speed reference. It might, for example, be the case while the speed is being ramped up/down during start/stop.
Bit 08 = '1' means that the motor's present speed is the same as the preset speed reference.

Bit 09, Local operation/serial communication control:
Bit 09 = '0' means that [STOP/RESET] is activated on the control unit, or that *Local control* in parameter 002 *Local/remote operation* is selected. It is not possible to control the frequency converter via serial communication.
Bit 09 = '1' means that it is possible to control the frequency converter via serial communication.

Bit 10, Outside frequency range:
Bit 10 = '0', if the output frequency has reached the value in parameter 201 *Output frequency low limit* or parameter 202 *Output frequency high limit*. Bit 10 = "1" means that the output frequency is within the defined limits.

Bit 11, Running/not running:
Bit 11 = '0' means that the motor is not running.
Bit 11 = '1' means that the frequency converter has a start signal or that the output frequency is greater than 0 Hz.

Bit 13, Voltage warning high/low:
Bit 13 = '0' means that there are no voltage warnings.
Bit 13 = '1' means that the DC voltage in the frequency converter's intermediate circuit is too low or too high.

Bit 14, Current limit:
Bit 14 = '0' means that the output current is less than the value in parameter 221 *Current Limit* I_{LIM} .
Bit 14 = '1' means that the output current is greater than the value in parameter 221 *Current Limit*I_{LIM} and that the frequency converter will trip after a set period of time.

Bit 15, Thermal warning:
Bit 15 = '0' means that there is no thermal warning.
Bit 15 = '1' means that the temperature limit has been exceeded in either the motor, frequency converter or from a thermistor that is connected to a digital input.

■ Control word according to Fieldbus Profile

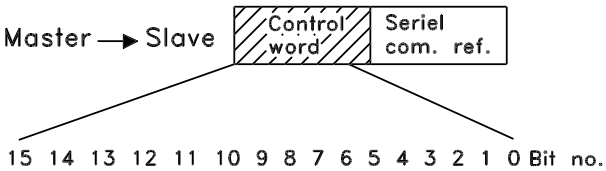

To select *Profidrive* in the control word, parameter 512 *Telegram Profile* must be set to *Profidrive* [0].

The control word is used to send commands from a master (e.g. a PC) to a slave (frequency converter). MasterSlave.

Bit	Bit = 0	Bit =1
00	OFF 1	ON 1
01	OFF 2	ON 2
02	OFF 3	ON 3
03	Coasting stop	
04	Quick stop	
05	Freeze outp. freq.	
06	Ramp stop	Start
07		Reset
08		Bus jog 1
09		Bus jog 2
10	Data not valid	Data valid
11		Slow down
12		Catch-up
13	Select Setup (lsb)	
14	Select Setup (msb)	
15		Reversing

Bit 00-01-02, OFF1-2-3/ON1-2-3:
Bit 00-01-02 = '0' causes ramp stop, which uses the ramp time in parameters 207/208 or 209/210.
If *Relay 123* is selected in parameter 323 *Relay output*, the output relay will be activated when the output frequency is 0 Hz.
Bit 00-01-02 = '1' means that the frequency converter can start the motor if the other starting conditions are fulfilled.

Bit 03, Coasting stop:
See description under *Control word according to FC protocol.*

Bit 04, Quick stop:
See description under *Control word according to FC protocol.*

Bit 05, Freeze output frequency:
See description under *Control word according to FC protocol.*

Bit 06, Ramp stop/start:
See description under *Control word according to FC protocol.*

Bit 07, Reset:
See description under *Control word according to FC protocol.*

Bit 08, Jog 1:
Bit 08 = "1" means that the output frequency is determined by parameter 09 *Bus jog 1*.

Bit 09, Jog 2:
Bit 09 = "1" means that the output frequency is determined by parameter 510 *Bus jog 2*.

Bit 10, Data not valid/Data valid:
See description under *Control word according to FC protocol.*

Bit 11, Slow-down:
Used to reduce the speed reference by the value in parameter 219 *Catch-up/slow-down reference*.
Bit 11 = '0' does not cause any change to the reference.
Bit 11 = '1' means that the reference is reduced.

Bit 12, Catch-up:
Used to increase the speed reference by the value in parameter 219 *Catch-up/slow-down reference*.
Bit 12 = '0' does not cause any change to the reference.
Bit 12 = '1' means that the reference is increased.
If both *Slow down* and *Catch-up* are activated (Bits 11 and 12 = "1"), slow down has the highest priority, i.e. that the speed reference is reduced.

Bit 13/14, Selection of Setup:
See description under *Control word according to FC protocol.*

Bit 15 Reversing:
See description under *Control word according to FC protocol.*

■ Status word according to Profidrive protocol

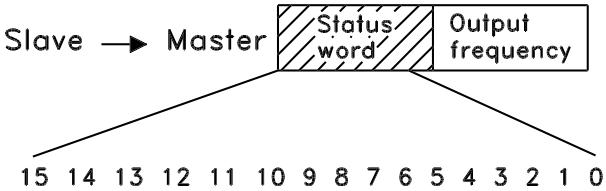

The status word is used to inform the master (e.g. a PC) of the slave's (frequency converter) mode. Slave-Master.

Bit	Bit = 0	Bit =1
00		Control ready
01		Drive ready
02	Coasting stop	
03	No trip	Trip
04	ON 2	OFF 2
05	ON 3	OFF 3
06	Start enable	Start disable
07		Warning
08	Speed ref.	Speed = ref.
09	Local control	Ser. communi.
10	Outside frequency range	Frequency limit OK
11		Motor running
12		
13		Voltage warn.
14		Current limit
15		Thermal warn.

Bit 00, Control not ready/ready:
Bit 00 = '0' means that the Bit 00, 01 or 02 in the control word are '0' (OFF1, OFF2 or OFF3) or the frequency converter is not ready for operation.
Bit 00 = '1' means that the frequency converter is ready for operation.

Bit 01, Drive ready:
See description under *Status word according to FC protocol.*

Bit 02, Coasting stop:
Bit 02 = '0' means that Bits 00, 02 or 03 in the control word are "0" (OFF1, OFF3 or Coasting stop).
Bit 02 = '1' means that Bits 00, 01, 02 and 03 in the control word are "1", and that the frequency converter has not tripped.

Bit 03, No trip/trip:
See description under *Status word according to FC protocol.*

Bit 04, ON 2/OFF 2:
Bit 04 = '0' means that Bit 01 in the control word = '1'.
Bit 04 = '1' means that Bit 01 in the control word = '0'.

Bit 05, ON 3/OFF 3:
Bit 05 = '0' means that Bit 02 in the control word = '1'.
Bit 05 = '1' means that Bit 02 in the control word = '0'.

Bit 06, Start enable/start disable:
Bit 06 = '1' after reset of a trip, after activation of OFF2 or OFF3 and after connection of mains voltage. *Start disable* is reset by setting Bit 00 in the control word to '0', and Bit 01, 02 and 10 are set to '1'.

Bit 07, Warning:
See description under *Status word according to FC protocol.*

Bit 08, Speed:
See description under *Status word according to FC protocol.*

Bit 09, No warning/warning:
See description under *Status word according to FC protocol.*

Bit 10, Speed ref/speed = ref.:
See description under *Status word according to FC protocol.*

Bit 11, Running/not running:
See description under *Status word according to FC protocol.*

Bit 13, Voltage warning high/low:
See description under *Status word according to FC protocol.*

Bit 14, Current limit:
See description under *Status word according to FC protocol.*

Bit 15, Thermal warning:
See description under *Status word according to FC protocol.*

■ Serial communication reference

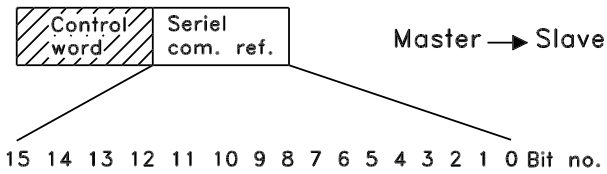

The serial communication reference is transferred to the frequency converter as a 16-bit word. The value is transferred in whole numbers 0 - ±32767 (±200%). 16384 (4000 Hex) corresponds to 100%.

The serial communication reference has the following format: 0-16384 (4000 Hex) • 0-100% (Par. 204 *Minimum ref.* - Par. 205 *Maximum ref.*).

It is possible to change the direction of rotation via the serial reference. This is done by converting the binary reference value to 2' complement. See example.

Example - Control word and serial communication ref.:

The frequency converter is to receive a start command and the reference is to be set to 50% (2000 Hex) of the reference range.
Control word = 047F Hex • Start command.
Reference = 2000 Hex • 50% reference.

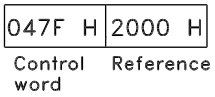

The frequency converter is to receive a start command and the reference is to be set to -50% (-2000 Hex) of the reference range.
The reference value is first converted to 1' complement, and then 1 is added binarily to obtain 2' complement:

2000 Hex	0010 0000 0000 0000 0000
1' complement	1101 1111 1111 1111 1111
	+ 1
2' complement	1110 0000 0000 0000 0000

Control word = 047F Hex • Start command.
Reference = E000 Hex • -50% reference.

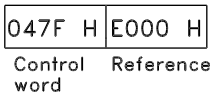

■ Present output frequency

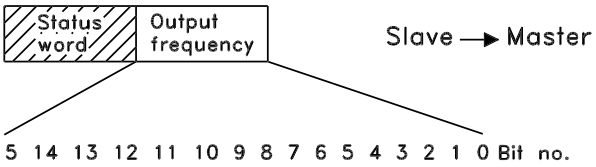

The value of the frequency converter's present output frequency is transferred as a 16-bit word. The value is transferred as whole numbers 0 - ±32767 (±200%). 16384 (4000 Hex) corresponds to 100%.

Output frequency has the following format:
0-16384 (4000 Hex) • 0-100% (Par. 201 *Output frequency low limit* - Par. 202 *Output frequency high limit*).

Example - Status word and current output frequency:
The master receives a status message from the frequency converter that the current output frequency is 50% of the output frequency range.
Par. 201 *Output frequency low limit* = 0 Hz
Par. 202 *Output frequency high limit* = 50 Hz

Status word = 0F03 Hex.
Output frequency = 2000 Hex • 50% of the frequency range, corresponding to 25 Hz.

0F03 H	2000 H
Status word	Output frequency

Serial communication

500 Address
(BUS ADDRESS)

Value:

Parameter 500 Protocol = FC protocol [0]
0 - 247 ★ 1
Parameter 500 Protocol = Metasys N2 [1]
1 - 255 ★ 1
Parameter 500 Protocol = MODBUS RTU [3]
1 - 247 ★ 1

Function:

This parameter allows the allocation of an address to each frequency converter in a serial communication network.

Description of choice:

The individual frequency converter must be allocated a unique address.
If the number of units connected (frequency converters + master) is higher than 31, a repeater must be used.
Parameter 500 *Address* cannot be selected via the serial communication, but must be preset via the control unit.

501 Baudrate
(BAUDRATE)

Value:

300 Baud (300 BAUD)	[0]
600 Baud (600 BAUD)	[1]
1200 Baud (1200 BAUD)	[2]
2400 Baud (2400 BAUD)	[3]
4800 Baud (4800 BAUD)	[4]
★ 9600 Baud (9600 BAUD)	[5]

Function:

This parameter is for programming the speed at which data is transmitted via the serial port. Baud rate is defined as the number of bits transmitted per second.

Description of choice:

The frequency converter's transmission speed must be set at a value corresponding to the transmission speed of the master.
Parameter 501 *Baudrate* cannot be selected via the serial port, but must be preset via the operating unit.

502 Coasting Stop
(COASTING SELECT)

Value:

Digital input (DIGITAL INPUT)	[0]
Serial port (SERIAL PORT)	[1]
Logic and (LOGIC AND)	[2]
★ Logic or (LOGIC OR)	[3]

Function:

Parameters 502-508 allow a choice between controlling the frequency converter via the digital inputs and/or via the serial port.
If *Serial port* [1] is selected, the relevant command can only be activated if a command is given via the serial port.
In the case of *Logic and* [2] the function must also be activated via a digital input.

Description of choice:

The table below shows when the motor is running and when it is coasting, when each of the following is selected: *Digital input* [0], *Serial port* [1], *Logic and* [2] or *Logic or* [3].

NB!
Note that *Coasting stop* and Bit 03 in the control word are active at logic '0'.

Digital input [0]

Dig. input	Ser. port	Function
0	0	Coasting
0	1	Coasting
1	0	Motor running
1	1	Motor running

Serial port [1]

Dig. input	Ser. port	Function
0	0	Coasting
0	1	Motor running
1	0	Coasting
1	1	Motor running

Logic and [2]

Dig. input	Ser. port	Function
0	0	Coasting
0	1	Motor running
1	0	Motor running
1	1	Motor running

Logic or [3]

Dig. input	Ser. port	Function
0	0	Coasting
0	1	Coasting
1	0	Coasting
1	1	Motor running

★ = factory setting, () = display text, [] = value for use in communication via serial communication port

503 Quick-stop (Q STOP SELECT)

Value:

Digital input (DIGITAL INPUT) [0]
Serial port (SERIAL PORT) [1]
Logic and (LOGIC AND) [2]
★ Logic or (LOGIC OR) [3]

Function:

See function description for parameter 502 *Coasting stop.*

Description of choice:

The table below shows when the motor is running and when it is in Quick-stop mode, when each of the following is selected: *Digital input* [0], *Serial port* [1], *Logic and* [2] or *Logic or* [3].

NB!
Note that *Quick-stop inverse* and Bit 04 in the control word are active at logic '0'.

Digital input [0]

Dig. input	Serial port	Function
0	0	Quick-stop
0	1	Quick-stop
1	0	Motor running
1	1	Motor running

Serial port [1]

Dig. input	Serial port	Function
0	0	Quick-stop
0	1	Motor running
1	0	Quick-stop
1	1	Motor running

Logic and [2]

Dig. input	Serial port	Function
0	0	Quick-stop
0	1	Motor running
1	0	Motor running
1	1	Motor running

Logic or [3]

Dig. input	Serial port	Function
0	0	Quick-stop
0	1	Quick-stop
1	0	Quick-stop
1	1	Motor running

504 DC brake (DC BRAKE SELECT)

Value:

Digital input (DIGITAL INPUT) [0]
Serial port (SERIAL PORT) [1]
Logic and (LOGIC AND) [2]
★ Logic or (LOGIC OR) [3]

Function:

See function description for parameter 502 *Coasting stop.*

Description of choice:

The table below shows when the motor is running and the DC braking when each of the following is selected *Digital input* [0], *Serial port* [1], *Logic and* [2] or *Logic or* [3].

NB!
Note that *DC braking inverse* and Bit 02 in the control word are active at logic '0'.

Digital input [0]

Dig. input	Ser. port	Function
0	0	DC braking
0	1	DC braking
1	0	Motor running
1	1	Motor running

Serial port [1]

Dig. input	Ser. port	Function
0	0	DC braking
0	1	Motor running
1	0	DC braking
1	1	Motor running

Logic and [2]

Dig. input	Ser. port	Function
0	0	DC braking
0	1	Motor running
1	0	Motor running
1	1	Motor running

Logic or [3]

Dig. input	Ser. port	Function
0	0	DC braking
0	1	DC braking
1	0	DC braking
1	1	Motor running

505 Start (START SELECT)

Value:

Digital input (DIGITAL INPUT) [0]
Serial port (SERIAL PORT) [1]
Logic and (LOGIC AND) [2]
★ Logic or (LOGIC OR) [3]

Function:

See function description for parameter 502 *Coasting stop.*

Description of choice:

The table below shows when the motor has stopped and when the frequency converter has a start com-

Programming

★ = factory setting, () = display text, [] = value for use in communication via serial communication port

mand when each of the following is selected: *Digital input* [0], *Serial port* [1], *Logic and* [2] or *Logic or* [3].

Digital input [0]		
Dig. input	Ser. port	Function
0	0	Stop
0	1	Stop
1	0	Start
1	1	Start

Serial port [1]		
Dig. input	Ser. port	Function
0	0	Stop
0	1	Start
1	0	Stop
1	1	Start

Logic and [2]		
Dig. input	Ser. port	Function
0	0	Stop
0	1	Stop
1	0	Stop
1	1	Start

Logic or [3]		
Dig. input	Ser. port	Function
0	0	Stop
0	1	Start
1	0	Start
1	1	Start

506 Reversing (REVERSING SELECT)

Value:

Digital input (DIGITAL INPUT)	[0]
Serial port (SERIAL PORT)	[1]
Logic and (LOGIC AND)	[2]
☆ Logic or (LOGIC OR)	[3]

Function:

See function description for parameter 502 *Coasting stop.*

Description of choice:

The table below shows when the motor is running clockwise and counterclockwise when each of the following is selected: *Digital input* [0], *Serial port* [1], *Logic and* [2] or *Logic or* [3].

Digital input [0]		
Dig. input	Ser. port	Function
0	0	Clockwise
0	1	Clockwise
1	0	Anti-clockwise
1	1	Anti-clockwise

Serial port [1]		
Dig. input	Ser. port	Function
0	0	Clockwise
0	1	Anti-clockwise
1	0	Clockwise
1	1	Anti-clockwise

Logic and [2]		
Dig. input	Ser. port	Function
0	0	Clockwise
0	1	Clockwise
1	0	Clockwise
1	1	Anti-clockwise

Logic or [3]		
Dig. input	Ser. port	Function
0	0	Clockwise
0	1	Anti-clockwise
1	0	Anti-clockwise
1	1	Anti-clockwise

507 Selection of Setup (SETUP SELECT)

Value:

Digital input (DIGITAL INPUT)	[0]
Serial communication (SERIAL PORT)	[1]
Logic and (LOGIC AND)	[2]
☆ Logic or (LOGIC OR)	[3]

Function:

See function description of parameter 502 *Coasting stop.*

Description of choice:

The table below shows which Setup (parameter 004 *Active Setup*) is selected for each of the following: *Digital input* [0], *Serial communication* [1], *Logic and* [2] or *Logic or* [3].

Digital input [0]		
Setup msb	Setup lsb	Function
0	0	Setup 1
0	1	Setup 2
1	0	Setup 3
1	1	Setup 4

Serial communication [1]		
Setup msb	Setup lsb	Function
0	0	Setup 1
0	1	Setup 2
1	0	Setup 3
1	1	Setup 4

☆ = factory setting, () = display text, [] = value for use in communication via serial communication port

Logic and [2]				
Bus Setup msb	Bus Setup lsb	Dig. Setup msb	Dig. Setup lsb	Setup no.
0	0	0	0	1
0	0	0	1	1
0	0	1	0	1
0	0	1	1	1
0	1	0	0	1
0	1	0	1	2
0	1	1	0	1
0	1	1	1	2
1	0	0	0	1
1	0	0	1	1
1	0	1	0	3
1	0	1	1	3
1	1	0	0	1
1	1	0	1	2
1	1	1	0	3
1	1	1	1	4

Logic or [3]				
Bus Setup msb	Bus Setup lsb	Dig. Setup msb	Dig. Setup lsb	Setup no.
0	0	0	0	1
0	0	0	1	2
0	0	1	0	3
0	0	1	1	4
0	1	0	0	2
0	1	0	1	2
0	1	1	0	4
0	1	1	1	4
1	0	0	0	3
1	0	0	1	4
1	0	1	0	3
1	0	1	1	4
1	1	0	0	4
1	1	0	1	4
1	1	1	0	4
1	1	1	1	4

508 Selection of preset ref. (PRES.REF. SELECT)

Value:

Digital input (DIGITAL INPUT)	[0]
Serial comunication (SERIAL PORT)	[1]
Logic and (LOGIC AND)	[2]
☆ Logic or (LOGIC OR)	[3]

Function:

See function description of parameter 502 *Coasting stop.*

Description of choice:

Preset references via serial communication are active when parameter 512 *Telegram profile* is set to *FC protocol* [1].

509 Bus jog 1 (BUS JOG 1 FREQ.)
510 Bus jog 2 (BUS JOG 2 FREQ.)

Value:

0.0 - par. 202 *Output frequency high limit* ☆ 10,0 Hz

Function:

If parameter 512 *Telegram Profile* shows the selection *Profidrive* [0], two fixed speeds (Jog 1 or Jog 2) can be selected via the serial port.
The function is the same as in parameter 213 *Jog frequency* .

Description of choice:

Jog frequency f_{JOG} can be selected between 0 Hz and f_{MAX}.

512 Telegram Profile (Telegram Profile)

Value:

Profidrive (Profidrive)	[0]
☆ FC protocol (FC protocol)	[1]

Function:

It is possible to choose between two different control word profiles.

Description of choice:

Select the desired control word profile.
See *Serial port for VLT 2800* for further details of control word profiles.

513 Bus time interval (BUS TIMEOUT TIME)

Value:

1 - 99 sec. ☆ 1 sec.

Function:

In this parameter it is possible to preset the maximum time expected to elapse between receipt of two consecutive telegrams. If this time is exceeded, the serial communication is assumed to have stopped and the desired reaction is preset in parameter 514 *Bus time interval function*.

Description of choice:

Preset the required time.

Programming

☆ = factory setting, () = display text, [] = value for use in communication via serial communication port

514 Bus time interval function (BUS TIMEOUT FUNC)

Value:

☆ Off (off)	[0]
Freeze output frequency (FREEZE OUTPUT)	[1]
Stop (STOP)	[2]
Jogging (JOGGING)	[3]
Max. speed (MAX SPEED)	[4]
Stop and trip (STOP AND TRIP)	[5]

Function:

In this parameter you can select the required reaction for the frequency converter when the preset time in parameter 513 *Bus time interval* has been exceeded. If choices [1] to [5] are activated the output relay will be deactivated.

Description of choice:

The output frequency of the frequency converter can be frozen at the present value, stop the motor, be frozen at parameter 213 *Jogging frequency*, be frozen at parameter 202 *Output frequency, high limit* f_{MAX} or stop and activate a cut out.

515-544 Data readout

Value:

Par. no.	Description	Display text	Unit	Update interval
515	Res. reference	(REFERENCE %)	%	
516	Res. reference [Unit]	(REFERENCE [UNIT])	Hz, rpm	
517	Feedback [Unit]	(FEEDBACK [UNIT])	Par. 416	
518	Frequency	(FREQUENCY)	Hz	
519	Frequency x scale	(FREQUENCY X SCALE)	Hz	
520	Motor current	(MOTOR CURRENT)	Amp	
521	Torque	(TORQUE)	%	
522	Power[kW]	(POWER (KW))	kW	
523	Power[HP]	(POWER (HP))	HP	
524	Motor voltage	(MOTOR VOLTAGE)	V	
525	DC-link voltage	(DC LINK VOLTAGE)	V	
526	Thermal load motor	(MOTOR THERMAL)	%	
527	Thermal load inverter	(INV. THERMAL)	%	
528	Digital input	(DIGITAL INPUT)	Bin	
529	Term.53, analogue input	(ANALOG INPUT 53)	V	
531	Term.60, analogue input	(ANALOG INPUT 60)	mA	
532	Pulse reference	(PULSE REFERENCE)	Hz	
533	External ref.	(EXT. REF.%)	%	
534	Status word, Hex	(STATUS WORD)	Hex	
535	Bus feedback 1	(BUS FEEDBACK1)	Hex	
537	Inverter temperature	(INVERTER TEMP.)	°C	
538	Alarm word	(ALARM WORD)	Hex	
539	Control word	(CONTROL WORD)	Hex	
540	Warning word	(WARN. WORD)	Hex	
541	Extended status word	(STATUS WORD)	Hex	
544	Pulse count	(PULSE COUNT)		

Function:

These parameters can be read out via the serial communication port and the LCP display. See also parameters 009-012 *Display readout*.

NB!
Parameters 515-541 can only be read out via an LCP control unit.

☆ = factory setting, () = display text, [] = value for use in communication via serial communication port

Description of choice:

Resulting reference %, parameter 515:

Gives the resulting reference as a percentage in the range from Minimum reference, Ref_{MIN} to Maximum reference, Ref_{MAX}. See also *Dealing with references*.

Resulting reference [unit], parameter 516:
Gives the resulting reference in Hz in Open loop (parameter 100). In a closed loop the reference unit is selected in parameter 416 *Process units*.

Feedback [unit], parameter 517:
Gives the resulting feedback value with the unit/scaling selected in parameters 414, 415 and 416. See also dealing with feedback.

Frequency [Hz], parameter 518:
Gives the output frequency from the frequency converter.

Frequency x scaling [-], parameter 519:
corresponds to the present output frequency f_M multiplied by the factor preset in parameter 008 *Display scaling of output frequency* .

Motor current [A], parameter 520:
Gives the motor's phase current measured as an effective value.

Torque [Nm], parameter 521:
Gives the motor's present load in relation to the motor's rated torque.

Power [kW], parameter 522:
Gives the present power absorbed by the motor in kW.

Power [HP], parameter 523:
Gives the present power absorbed by the motor in HP.

Motor voltage, parameter 524:
Gives the voltage being supplied to the motor.

DC link voltage, parameter 525:
Gives the intermediate circuit voltage in the frequency converter.

Thermal load, motor [%], parameter 526:
Gives the calculated/estimated thermal load on the motor. 100% is the cut-out limit. See also parameter 128 *Thermal motor protection*.

Thermal load INV [%], parameter 527:
Gives the calculated/estimated thermal load on the frequency converter. 100% is the cut-out limit.

Digital input, parameter 528:
Gives the signal status from the 5 digital inputs (18, 19, 27, 29 and 33). Input 18 corresponds to the bit on the extreme left. '0' = no signal, '1' = connected signal.

Terminal 53 analogue input [V], parameter 529:
Gives the voltage value for the signal on terminal 53.

Terminal 60 analogue input [mA], parameter 531:
Gives the present value for the signal on terminal 60.

Pulse reference [Hz], parameter 532:
Gives a pulse frequency in Hz connected to terminal 33.

External reference, parameter 533:
Gives the sum of external references as a percentage (sum of analogue/pulse/serial communication) in the range from Minimum reference, Ref_{MIN} to Maximum reference, Ref_{MAX}.

Status word, parameter 534:
Gives the present status word for the frequency converter in Hex. See *Serial communication for the VLT 2800.*

Bus feedback 1, parameter 535:
Allows writing of a bus feedback value which will then form part of the feedback handling.

Inverter temperature, parameter 537:
Gives the present inverter temperature on the frequency converter. The cut-out limit is 90-100 °C, with cut back in at 70 ± 5 °C.

Alarm word, parameter 538:
Gives in Hex code which alarm is on the frequency converter. See *Warning word, extended status word and alarm word.*

Control word, parameter 539:
Gives the present control word on the frequency converter in Hex. See *Serial communication for the VLT 2800.*

Warning word, parameter 540:
States whether there is a warning on the frequency converter in Hex. See *Warning word, extended status word and alarm word.*

Extended status word, parameter 541:
States whether there is a warning on the frequency converter in Hex code. See *Warning word, extended status word and alarm word.*

Pulse count, parameter 544:
This parameter can be read out via the LCP display (009-012). When you run with counter stop, this parameter enables you, either with or without reset, to read the number of pulses registered by the device. The highest frequency is 67.6 kHz, while the lowest is 5 Hz. The counter is reset when counter stop is restarted.

★ = factory setting, () = display text, [] = value for use in communication via serial communication port

560 N2 Override release time (N2 OVER.REL.TIME)

Value:

1 - 65534 (OFF) sec. ★ OFF

Function:

In this parameter, the maximum time is set which is expected to pass between the receipt of two N2 telegrams in a row. If this time is exceeded, the serial communication is assumed to have stopped and all points in the N2 point-map which are overridden will be released in the order below:

1. Release Analog Outputs from point address (NPA) 0 to 255.
2. Release Binary Outputs from point address (NPA) 0 to 255.
3. Release Internal Floating Points from point address (NPA) 0 to 255.
4. Release Internal Integer Points from point address (NPA) 0 to 255.
5. Release Internal Byte points from point address (NPA) 0 to 255.

Description of choice:

Set the required time.

---

561 Protocol (PROTOCOL)

Value:

★ FC protocol (FC PROTOKOL)	[0]
Metasys N2 (METASYS N2)	[1]
Modbus RTU	[2]

Function:

There is a choice of three different protocols.

Description of choice:

Select the required control word protocol.

For further information about using the Metasys N2 Protocol see MG91CX and Modbus RTU see MG10SX.

---

570 Modbus parity and message framing (M.BUS PAR./FRAME)

Value:

(EVEN/1 STOPBIT)	[0]
(ODD/1 STOPBIT)	[1]
★ (NO PARITY/1 STOPBIT)	[2]
(NO PARITY/2 STOPBIT)	[3]

Function:

This parameter sets up the drive's Modbus RTU interface to communicate properly with the master controller. The parity (EVEN, ODD, or NO PARITY) must be set to match the setting of the master controller.

Description of choice:

Select the parity that matches the setting for the Modbus master controller. Even or odd parity is sometimes used to allow a transmitted word to be checked for errors. Because Modbus RTU uses the more efficient CRC (Cyclic Redundancy Check) method of checking for errors, parity checking is seldom used in Modbus RTU networks.

---

571 Modbus communications timeout (M.BUS COM.TIME.)

Value:

10 ms - 2000 ms ★ 100 ms

Function:

This parameter determines the maximum amount of time that the drive's Modbus RTU will wait between characters that are sent by the master controller. When this amount of time expires, the drive's Modbus RTU interface will assume that it has received the entire message.

Description of choice:

Generally, the value of 100 ms is sufficient for Modbus RTU networks, although some Modbus RTU networks may operate on a timeout value as short as 35 ms.
If this value is set too short, the drive's Modbus RTU interface may miss a part of the message. Since the CRC check will not be valid, the drive will ignore the message. The resulting retransmissions of messages will slow communications on the network.
If this value is set too long, the drive will wait longer than necessary to determine that the message is completed. This will delay the drive's response to the message and possibly cause the master controller to time out. The resulting retransmissions of messages will slow communications on the network.

★ = factory setting, () = display text, [] = value for use in communication via serial communication port

580-582 Defined parameters (defined pnu's)

Value:

Read only

Function:

The three parameters hold a list of all the parameters that are defined in the VLT 2800. It is possible to read single elements of the list by using the corresponding subindex. The subindexes start at 1 and follow the order of the parameter numbers.

Each parameter holds up to 116 elements (parameter numbers).

When a 0 is returned as parameter number the list ends.

Technical functions

600-605 Operating Data				
Value:				
Par. no.	Description	Display text	Unit	Range
600	Operating hours	(OPERATING HOURS)	Hours	0-130,000.0
601	Hours run	(RUNNING HOURS)	Hours	0-130,000.0
602	kWh counter	(KWH COUNTER)	kWh	Depends on unit
603	Number of power-up's	(POWER UP'S)	Number of times	0-9999
604	Number of overtemperatures	(OVER TEMP'S)	Number of times	0-9999
605	Number of overvoltages	(OVER VOLT'S)	Number of times	0-9999

Function:

These parameters can be read out via the serial communication port and the LCP control unit.

Description of choice:

Parameter 600, Operating hours:
Gives the number of hours the frequency converter has been operating. The value is saved every hour and when there is a mains failure. This value cannot be reset.

Parameter 601, Hours run:
Gives the number of hours the motor has been operating since the reset in parameter 619 *Reset of hours-run counter*. The value is saved every hour and when there is a mains failure.

Parameter 602, kWh counter:
Gives the frequency converter's output energy in kWh. The calculation is based on the mean kW value over one hour. This value can be reset using parameter 618 *Reset of kWh counter*.
Range: 0 - depends on unit.

Parameter 603, Number of power-ups:
Gives the number of power-ups of the supply voltage undertaken on the frequency converter.

Parameter 604, Number of overtemperatures:
Gives the number of overtemperature faults that have been registered on the frequency converter's heat sink.

Parameter 605, Number of overvoltages:
Gives the number of overvoltages of the intermediate circuit voltage in the frequency converter. This is only counted when Alarm 7 *Overvoltage* is active.

NB!
Parameters 615-617 *Fault log* cannot be read out via the integral control unit.

615 Fault log: Error code (F.LOG: ERROR COD)

Value:

[Index 1 - 10] Error code: 0 - 99

Function:

In this parameter it is possible to see the reason for a trip (cut-out of the frequency converter) occurring. 10 [1-10] log values are defined.
The lowest log number [1] contains the latest/most recently saved data value. The highest log number [10] contains the oldest data value saved. If a trip occurs, it is possible to see the cause, time and a possible value of the output current or output voltage.

Description of choice:

Given as a fault code, in which the number refers to a table. See the table in *Warnings/alarm messages*.

616 Fault log: Time (F.LOG: TIME)

Value:

[Index 1 - 10] Hours: 0 - 130,000.0

Function:

In this parameter it is possible to see the total number of operating hours in connection with the last 10 trips. 10 [1-10] log values are denoted. The lowest log number [1] contains the latest/most recently saved data value, and the highest log number [10] contains the oldest data value.

Description of choice:

Read out as one value.

★ = factory setting, () = display text, [] = value for use in communication via serial communication port

617 Fault log: Value
(F.LOG: VALUE)

Value:

[Index 1 - 10] Value: 0 - 9999

Function:

In this parameter it is possible to see at which value a trip occurred. The unit of the value depends on which alarm is active in parameter 615 *Fault log: Fault code* .

Description of choice:

Read out as one value.

618 Reset of kWh counter
(RESET kWh COUNT)

Value:

★ No reset (DO NOT RESET)	[0]
Reset (RESET COUNTER)	[1]

Function:

Resetting parameter 602 *kWh counter* to zero.

Description of choice:

If *Reset* [1]is selected and you press the [OK] key, the frequency converter's kWh counter is reset to zero. This parameter cannot be selected via serial communication.

NB!
When the [OK] key is activated, the counter is reset to zero.

619 RESET RUNNING HOURS COUNTER
(RESET RUN. HOUR)

Value:

★ No reset (DO NOT RESET)	[0]
Reset (RESET COUNTER)	[1]

Function:

Resetting of parameter 601 *Hours run* to zero.

Description of choice:

If *Reset* [1] is selected and you press the [OK] key, the frequency converter's parameter 601 is reset to zero *Hours run*. This parameter cannot be selected via serial communication.

NB!
When the [OK] key is activated the parameter is reset to zero.

620 Operation Mode
(OPERATION MODE)

Value:

★ Normal operation (NORMAL OPERATION)	[0]
Control card test (CONTROL CARD TEST)	[2]
Initialise (INITIALIZE)	[3]

Function:

NB!
Please note, that the control card will be different on DeviceNet units. See the DeviceNet manual MG.90.BX.YY for further details.

In addition to its normal function, this parameter can be used to test the control card.
There is also the opportunity to perform an initialisation at the factory setting for all parameters in all Setups, with the exception of parameters 500 *Address*, 501 *Baudrate*, 600-605 *Operating data* and 615-617 *Fault log*.

Description of choice:

Normal function [0] is used for normal operation of the motor.

Control card test [2] is selected if you wish to check the control card's analog/digital inputs, analog/digital outputs, relay outputs and 10 V and 24 V voltages.
The test is performed as follows:
27 - 29 - 33 - 46 are connected.
50 - 53 are connected.
42 - 60 are connected.
12 - relay terminal 01 is connected.
18 - relay terminal 02 is connected.
19 - relay terminal 03 is connected.

Programming

★ = factory setting, () = display text, [] = value for use in communication via serial communication port

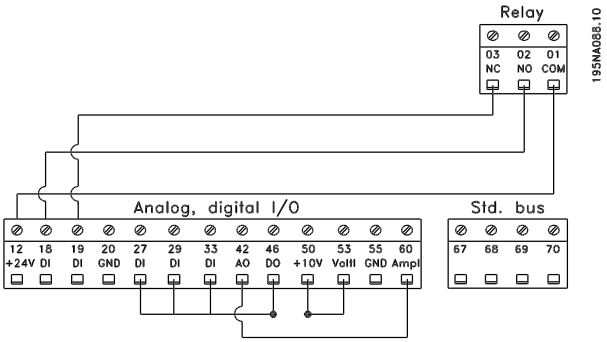

Use the following procedure for the control card test:

1. Select control card test.
2. Disconnect the mains voltage and wait until the light in the display has disappeared.
3. Mount according to drawing and description.
4. Connect the mains voltage.
5. The frequency converter automatically undertakes a test of the control card.

If the frequency converter displays a fault code from 37-45, the control card test has failed. Change the control card to start up the frequency converter.
If the frequency converter comes into Display mode, the test is OK. Remove the test connector and the frequency converter is ready for operation. Parameter 620 *Operating mode* is automatically set to *Normal operation* [0].

Initialisation [3] is selected if you wish to use the unit's factory setting.
Procedure for initialisation:

1. Select *Initialisation* [3].
2. Disconnect the mains voltage and wait until the light in the display has disappeared.
3. Connect the mains voltage.
4. An initialisation is performed in all parameters in all Setups, with the exception of parameters 500 *Address*, 501 *Baudrate*, 600-605 *Operating data* and 615-617 *Fault log*.

621-642 Nameplate		
Value:		
Par. no	Description Nameplate	Display text
621	Unit type	(DRIVE TYPE)
624	Software version	(SOFTWARE VERSION)
625	LCP identification no.	(LCP VERSION)
626	Database identification no.	(DATABASE VER.)
627	Power parts version	(POWER UNIT DB ID)
628	Application option type	(APP. OPTION)
630	Communication option type	(COM. OPTION)
632	BMC software identification	(BMC-SOFTWARE ID)
634	Unit identification for communication	(UNIT ID)
635	Software parts no.	(SW. PART NO.)
640	Software version	(SOFTWARE VERSION)
641	BMC-software identification	(BMC2 SW)
642	Power card identification	(POWER ID)

Function:

The unit's main data can be read out from parameters 621 to 635 *Nameplate* using the LCP 2 control unit or serial communication. Parameters 640 - 642 can also be seen on the unit's integral display.

Description of choice:

Parameter 621 Nameplate: Unit type:
Gives unit size and mains voltage.
Example: VLT 2811 380-480 V.

Parameter 624 Nameplate: Software version no.
The unit's present software version number appears here.
Example: V 1.00

Parameter 625 Nameplate: LCP 2 ID number:
The ID number of the unit's LCP 2 appears here.
Example: ID 1.42 2 kB

Parameter 626 Nameplate: Database ID number:
The ID number of the software's database appears here.
Example: ID 1.14.

Parameter 627 Nameplate: Power section version:
The ID number of the unit's power section appears here.
Example: ID 1.15.

Parameter 628 Nameplate: Application option type:
Here you can see which types of application options are installed in the frequency converter.

Parameter 630 Nameplate: Communication option type:
Here you can see which types of communication options are installed in the frequency converter.

Parameter 632 Nameplate: BMC software identification:
The ID number of the BMC software appears here.

Parameter 634 Nameplate: Unit identification for communication:
The ID number for communication appears here.

Parameter 635 Nameplate: Software section no.:
The software section number appears here.

Parameter 640 Nameplate: Software version:
The unit's present software version number appears here. Example: 1.00

Parameter 641 Nameplate: BMC software identification:
The ID number of the BMC software appears here.

Parameter 642 Nameplate: Power card identification:
The ID number of the unit's power part appears here.
Example: 1.15

Parameter 700 -
Only for wobble functions: To use this function or for further information, please see MI29J2xx.

★ = factory setting, () = display text, [] = value for use in communication via serial communication port

678	Configure Control Card (CONFIG CONTROL CARD)

Value:

Standard version (STANDARD VERSION)	[1]
Profibus 3 Mbaud Version (PROFIBUS 3 MB Ver.)	[2]
Profibus 12 Mbaud Version (PROFIBUS 12 MB Ver.)	[3]

Function:

This parameter enables a configuration of a Profibus Control Card. The default value depends on the produced unit, also being the maximum obtainable value. This means, that a control card only can be down graded to a lower performance version.

Special conditions

Galvanic Isolation (PELV)

PELV (Protective Extra Low Voltage) insulation is achieved by inserting galvanic isolators between the control circuits and circuits that are connected to the mains potential. The VLT is designed to meet the requirements for protective separation by means of having the necessary creepage and clearance distances. These requirements are described in standard EN 50 178. It is also a requirement that the installation is carried out as described in local/national regulations regarding PELV.

All control terminals, terminals for serial communication and relay terminals are safely separated from the mains potential, i.e. they comply with the PELV requirements. Circuits that are connected to control terminals 12, 18, 19, 20, 27, 29, 33, 42, 46, 50, 53, 55 and 60 are galvanically connected to one another. Serial communication connected to fieldbus is galvanically insulated from the control terminals, although this is only a functional insulation.
The relay contacts on terminals 1 - 3 are insulated from the other control circuits with reinforced/double isolation, i.e. PELV is observed for these, even though there is mains potential at the relay terminals.

The circuit elements described below form the safe electric separation. They fulfill the requirements for reinforced/double insulation and associated testing pursuant to EN 50 178.

1. Transformer and optical separation in voltage supply.
2. Optical insulation between Basic Motor Control and control card.
3. Insulation between the control card and the power part.
4. Relay contacts and terminals relating to other circuits on the control card.

PELV insulation of the control card is guaranteed under the following conditions:

- TT network with maximum 300 Vrms between phase and earth.
- TN network with maximum 300 Vrms between phase and earth.
- IT network with maximum 400 Vrms between phase and earth.

In order to maintain PELV all connections made to the control terminals must be PELV, e.g. thermistor must be reinforced/double insulated.

Earth leakage currentand RCD relays

Earth leakage current is primarily caused by the parasitic capacitance between motor phases and motor cable screen. When an RFI filter is used, this contributes additional leakage current, as the filter circuit is connected to earth through capacitors.
The size of the earth leakage current depends on the following factors, in order of priority:

1. Length of the motor cable
2. Motor cable with/without screen
3. High switching frequency
4. RFI filter used or not
5. Motor earthed on site or not

The leakage current is of importance to safety during handling/operation of the frequency converter if (by mistake) the frequency converter has not been earthed.

NB!
Since the leakage current is > 3.5 mA, reinforced earthing must be established, as this is required to ensure compliance with EN 50178. The cable cross section must be at least 10 mm^2 or 2 rated earth wires that are terminated seperately.

NB!
Never use RCD relays (type A) that are not suitable for DC fault currents from 3-phase rectifier loads.

If RCD relays are used, they must be:

- Suitable for protecting equipment with a DC content in the faulty current (3-phase bridge rectifier)
- Suitable for a pulse-shaped, brief discharge on power-up
- Suitable for a high leakage current (300 mA)

See the section entitled *Earth connection* for further information.

Extreme operating conditions

Short circuit
The frequency converter is protected against short circuits on motor terminals U, V, W (96, 97, 98). A short circuit between two motor terminals would lead to an overcurrent in the IGBT module, which means that all transistors in the IGBT module would independently cut out.

The inverter turns off after 5-10 s and the frequency converter displays a fault code, although this depends on impedance and motor frequency.

Earth fault
The IGBT module cuts out within 100 s in case of an earth fault on one of the motor terminals U, V, W (96, 97, 98), although depending on impedance and motor frequency.

Output connection
Motor terminals U, V, W (96, 97, 98) for the motor can be connected/disconnected as often as required. There is no way that the frequency converter can be destroyed by connecting/disconnecting the motor terminals. However, fault messages may appear.

Motor-generated overvoltage
The voltage in the intermediate circuit is increased when the motor acts as a generator. To protect the frequency converter the IGBT module is disconnected when a specific voltage level is reached.
Motor-generated overvoltage can occur in two instances:

1. The load drives the motor, i.e. the load generates energy.
2. During deceleration (ramp-down) if the moment of inertia is high, the load is low and the ramp-down time too short for the energy to be dissipated as a loss in the frequency converter, the motor and the unit. The control unit attempts to correct the ramp if possible.

The fault can be removed by connecting a brake resistor, if the frequency converter has an integrated brake module. If the frequency converter does not have an integrated brake module an AC brake can be used, see parameter 400 *Brake function*.
See the section entitled *Brake resistors*.

Static overloading
When the frequency converter is overloaded (current limit in parameter 221 *Current limit* I_{LIM} is reached), the control reduces the output frequency in an attempt to reduce the load. If the overloading is extreme, there might be an output current that causes the frequency converter to trip after approx. 1.5 sec. See parameter 409 *Trip delay overcurrent,* I_{LIM} .
An extreme overload will cause the switching frequency to be derated to 3000 Hz.

■ **dU/dt on motor**

When a transistor in the inverter is opened, the voltage across the motor terminals will rise by a voltage/time ratio (dU/dt) determined by:

- the motor cable (type, cross-section, induction, capacity, length and screened/armoured/unscreened/unarmoured)
- the mains voltage

Self-induction in the motor cable leads to an overswing U_{PEAK} of the output voltage each time a transistor in the inverter is opened. After U_{PEAK} the output voltage will stabilise at a level determined by the voltage in the intermediate circuit. U_{PEAK} and dU/dt influence the lifetime of the motor, especially motors without phase insulation paper in the coils. If the motor cable is short (a few metres), the overshoot U_{PEAK} is low, while the dU/dt is high. If the motor cable is long (>20 m), U_{PEAK} is increased to about twice the intermediate votage, while dU/dt decreases. When using small motors without phase insulation paper or submerged water pumps, it is recommended that an LC-filter is connected after the frequency converter.

■ **Switching on the input**

The waiting time between switching the mains voltage on terminals 91, 92 and 93 must be min. 30 sec. Start up time appr. 2.3 sec.

■ **Peak voltage on motor**

When a transistor in the inverter is opened, the voltage across the motor increases by a dU/dt ratio that depends on:

- the motor cable (type, cross-section, length screened or unscreened)
- inductance

The natural induction causes an overshot U_{PEAK} in the motor voltage before it stabilises itself at a level which depends on the voltage in the intermediate circuit. The rise time and the peak voltage U_{PEAK} affect the service life of the motor. If the peak voltage is too high, motors without phase coil insulation are the ones that will primarily be affected. If the motor cable is short (a few metres), the rise time is higher and the peak voltage is lower.
If the motor cable is long (100 m), the rise time will decrease and the peak voltage will increase to about twice the intermediate voltage.

If very small motors without phase insulation, paper or submerged water pumps are used, it is recommended to fit a LC filter after the frequency converter.

Typical values for the rise time and peak voltage U_{PEAK} are measured on the motor terminals between two phases.

To obtain approximate values for cable lengths and voltages not mentioned below, use the following rules of thumb:

1. Rise time increases/decreases proportionally with cable length.
2. U_{PEAK} = DC link voltage x 1.9
   (DC link voltage = Mains voltage x 1.35).
3. $$dU \Big/ dt = \frac{0.5 \times U_{PEAK}}{Risetime}$$

Data are measured according to IEC 60034-17.

VLT 2803-2815				
Cable length	Mains voltage	Rise time	Peak voltage	dU/dt
5 metres	220 V	137 µsec.	348 V	2.116 V/µsec.
42 metres	220 V	362 µsec.	460 V	1.016 V/µsec.
5 metres	240 V	129 µsec.	365 V	2.294 V/µsec.
42 metres	240 V	310 µsec.	498 V	1.303 V/µsec.

VLT 2805-2840				
Cable length	Mains voltage	Rise time	Peak voltage	dU/dt
5 metres	380 V	81 µsec.	680 V	6716 V/µsec.
15 metres	380 V	167 µsec.	960 V	4593 V/µsec.
30 metres	380 V	306 µsec.	992 V	2593 V/µsec.
5 metres	480 V	86 µsec.	840 V	7778 V/µsec.
15 metres	480 V	177 µsec.	1168 V	5279 V/µsec.
30 metres	480 V	323 µsec.	1232 V	3050 V/µsec.

VLT 2805-2840				
Cable length	Mains voltage	Rise time	Peak voltage	dU/dt
5 metres	380 V	120 µsec.	772 V	4438 V/µsec.
40 metres	380 V	188 µsec.	1004 V	3482 V/µsec.
78 metres	380 V	220 µsec.	1012 V	2854 V/µsec.
5 metres	480 V	120 µsec.	920 V	4667 V/µsec.
40 metres	480 V	245 µsec.	1252 V	3646 V/µsec.
78 metres	480 V	225 µsec.	1220 V	3168 V/µsec.

■ Acoustic noise

The acoustic noise from the frequency converter comes from two sources:

1. DC intermediate circuit coils.
2. Integral fan.

Below are the typical values measured at a distance of 1 m from the unit at full load:

VLT 2803-2815 1 x 220 V: 52 dB(A).
VLT 2822 1 x 220 V PD2:54 dB(A).
VLT 2840 1 x 220 V PD2: 55 dB (A).
VLT 2840 3 x 200 V PT2: 54 dB (A).
VLT 2803-2822 3 x 220 V: 52 dB(A).
VLT 2805-2840 3 x 400 V: 52 dB(A).
VLT 2855-2875 3 x 400 V: 54 dB(A).
VLT 2880-2882 3 x 400 V: 55 dB(A).

■ Derating for ambient temperature

The ambient temperature ($T_{AMB,MAX}$) is the maximum temperature allowed. The average ($T_{AMB,AVG}$) measured over 24 hours, must be at least 5 °C lower. If the frequency converter operates at temperatures above 45 °C, a derating of the rated output current is necessary.

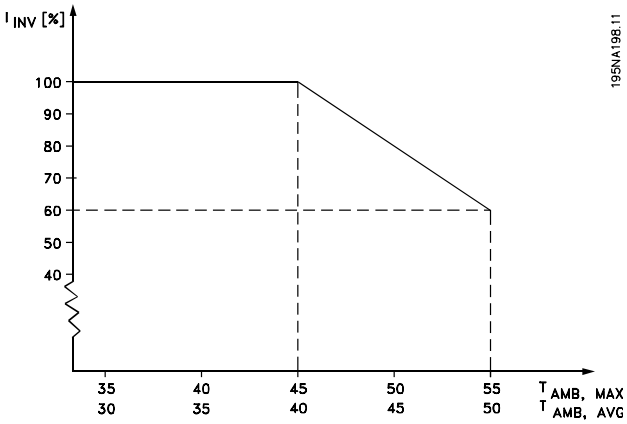

Temperature-dependent switch frequency

This function ensures the highest possible switch frequency without the frequency converter becoming thermally overloaded. The internal temperature is the actual expression of the degree to which the switch frequency can be based on the load, the ambient temperature, the supply voltage and the cable length.
The function ensures that the frequency converter automatically adjusts the switch frequency between $f_{sw, min}$ and $f_{sw, max}$ (parameter 411), see drawing below.

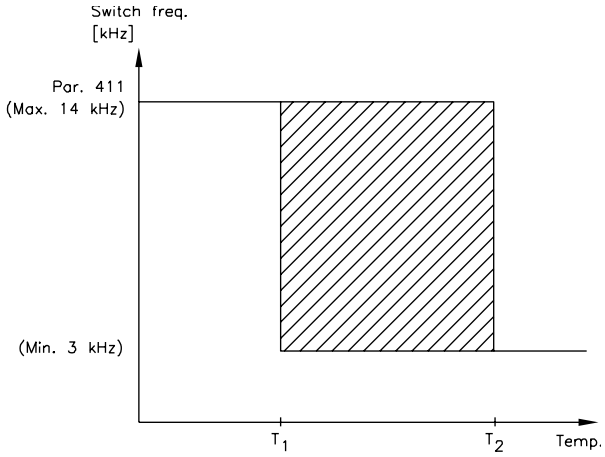

175NA020.13

When using the LC filter the minimum switch frequency is 4.5 kHz.

Derating for air pressure

The Protective Extra Low Voltage (PELV) requirements stated in IEC 61800-5-1 are not fulfilled at altitudes above 2000 m (6562 ft.). For 200V frequency converters the requirements are not fulfilled at altitudes above 5000 m (16 404 ft.). Please contact Danfoss Drives for further information.

Below 1000 m derating is not necessary.
Above 1000 m the ambient temperature (T_{AMB}) or max. output current (I_{MAX}) must be derated in accordance with the diagram below:

1. Derating of output current versus altitude at T_{AMB} = max. 45 °C.
2. Derating of max. T_{AMB} versus altitude at 100% output current.

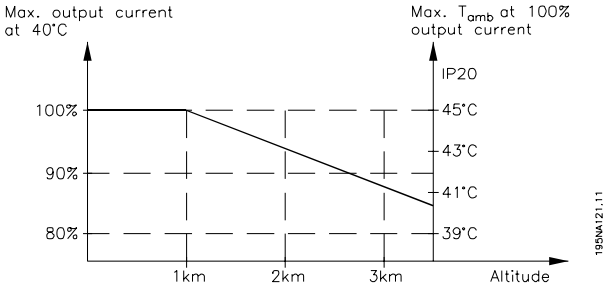

Derating for running at low speed

When a motor is connected to a frequency converter, it is necessary to ensure adequate cooling of the motor. At low rpm values, the motor fan is not able to supply an adequate volume of cooling air. This problem occurs when the load torque is constant (e.g. with a conveyor belt) across the full regulating range. The reduced amount of ventilation determines the permissible torque in continuous operation. If the motor is to run continuously at an rpm lower than half the rated value, extra cooling air must be supplied to the motor. Instead of providing extra cooling, it is possible to reduce the motor load ratio. This can be done by selecting a larger motor. However, the design of the frequency converter puts limits on the size of motors that can be connected to the frequency converter.

Derating for long motor cables

The frequency converter has been tested using a 75 m unscreened/unarmoured cable and a 25 m screened/armoured cable and has been designed to work using a motor cable with a rated cross-section. If a cable with a larger cross-section is required, it is recommended to reduce the output current by 5% for each step the cable cross-section is increased. (Increased cable cross-section leads to increased capacitance to earth, and thus to an increased earth leakage current).

Derating for high switching frequency - VLT 2800

A higher switching frequency (to be set in parameter 411, *Switching frequency*) leads to higher losses in the electronics of the frequency converter.

VLT 2800 has a pulse pattern in which it is possible to set the switching frequency from 3.0- 10.0/14.0 kHz.

The frequency converter will automatically derate the rated output current $I_{VLT,N,}$ when the switching frequency exceeds 4.5 kHz.

In both cases, the reduction is carried out linearly, down to 60% of $I_{VLT,N}$.

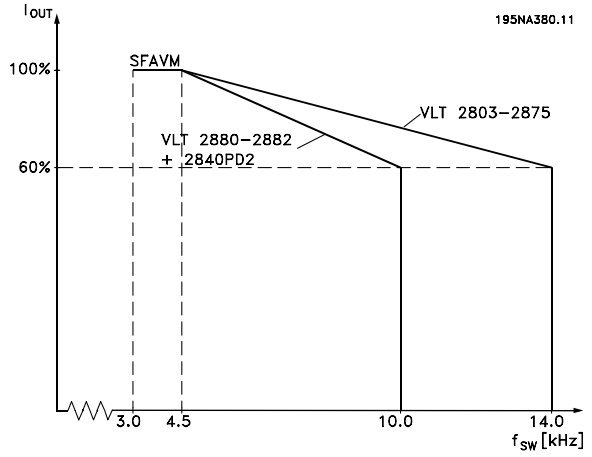

Vibration and shock

The frequency converter has been tested according to a procedure based on the following standards:

IEC 68-2-6: Vibration (sinusoidal) - 1970.

IEC 68-2-34: Random vibration broad-band - general requirements.

IEC 68-2-35: Random vibration broad-band - high reproducibility.

IEC 68-2-36: Random vibration broad-band - medium reproducibility.

The frequency converter complies with requirements that correspond to conditions when the unit is mounted on the walls and floors of production premises, as well as in panels bolted to walls or floors.

Air humidity

The frequency converter has been designed to meet the IEC 68-2-3 standard, EN 50178 item 9.4.2.2/ DIN 40040 class E at 40 °C.

UL Standard

This device is UL-approved.

Efficiency

To reduce energy consumption it is very important to optimize the efficiency of a system. The efficiency of each single element in the system should be as high as possible.

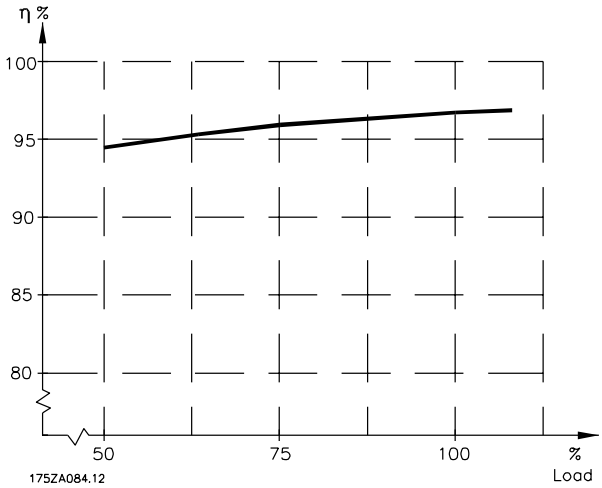

Efficiency of frequency converters ($\bullet_{INV}$)

The load on the frequency converter has little effect on its efficiency. In general, the efficiency is the same at the rated motor frequency $f_{M,N}$, regardless of whether the motor supplies 100% rated shaft torque or only 75%, e.g. in case of part loads.

This also means that the efficiency of the frequency converter does not change even if other U/f characteristics are chosen. However, the U/f characteristics influence the efficiency of the motor.
The efficiency declines a little when the switching frequency is set to a value above 4.5 kHz (parameter 411 *Switching frequency*). The rate of efficiency will also be slightly reduced at a high mains voltage (480 V), or if the motor cable is longer than 25 m.

Efficiency of the motor ($\bullet_{MOTOR}$)

The efficiency of a motor connected to the frequency converter depends on the sine shape of the current. In general, the efficiency is just as good as in mains operation. The efficiency of the motor depends on the motor type.

In the range of 75-100% of the rated torque, the efficiency of the motor is practically constant, both when it is controlled by the frequency converter and when it runs directly on mains.

In general, the switching frequency does not affect the efficiency of small motors.

Efficiency of the system ($\bullet_{SYSTEM}$)

To calculate the system efficiency, the efficiency of the frequency converters ($\bullet_{INV}$) should be multiplied by the efficiency of the motor ($\bullet_{MOTOR}$):

$\bullet_{SYSTEM} = \bullet_{INV} \times \bullet_{MOTOR}$.

Based on the graph above, it is possible to calculate the system efficiency at different loads.

Mains supply interference/harmonics

A frequency converter takes up a non-sinusoidal current from mains, which increases the input current I_{RMS}. A non-sinusoidal current can be transformed by means of a Fourier analysis and split up into sinusoidal currents with different frequencies, i.e. different harmonic currents I_n with 50 Hz as the basic frequency:

Harmonic currents	I_1	I_5	I_7
Frequency [Hz]	50	250	350
	0,9	0,4	0,3

The harmonic currents do not affect power consumption directly, but they increase the heat losses in the installation (transformer, cables). Consequently, in plants with a rather high percentage of rectifier load, it is important to maintain harmonic currents at a low level to avoid overload of the transformer and high temperature in the cables.

Some of the harmonic currents might disturb communication equipment connected to the same transformer or cause resonance in connection with power-factor correction batteries.

Power factor

The power factor (Pf) is the relation between I_1 and I_{RMS}.

The power factor for 3-phase supply:

$$Pf = \frac{\sqrt{3} \times U \times I1 \times \cos\varphi}{\sqrt{3} \times U \times I_{RMS}}$$

The power factor indicates the extent to which the frequency converter imposes a load on the mains supply. The lower the power factor, the higher the I_{RMS} for the same kW performance. In addition, a high power factor indicates that the different harmonic currents are low.

Generic EMC standards/product standards

Standard / environment	Industrial environment		Residential, commercial and light industry	
EMC Product Standard	EN61800-3		EN61800-3	
1st edition, 1996	Unrestricted	restricted	Unrestricted	restricted
2nd edition, 2004	Category 3	Category 4	Category 1	Category 2
EMC Basic Standard, EN55011, Cable-borne /Radiated	Class A2	EMC plan*	Class B	Class A1
Generic EMC standards	EN 61000-6-4		EN 61000-6-3	
EMC Basis Standard, EN55011, Cable-borne /Radiated	Class A		Class B	

*) Described in details in the EMC Product Standard. This category is among other things for complex installations (for instance IT supply networks).

EMC emission

The following system results are achieved on a system consisting of a VLT Series 2800 with screened/armoured control cable, control box with potentiometer, screened/armoured motor cable and screened/armoured brake cable as well as an LCP2 with cable.

VLT 2803-2875	Emission			
	Industrial environment		Residential, commercial and light industry	
	EN 55011 class 1A		EN 55011 class 1B	
Setup	Cable-borne 150 kHz- 30 MHz	Radiated 30 MHz - 1 GHz	Cable-borne 150 kHz - 30 MHz	Radiated 30 MHz - 1 GHz
3 x 480 V version with 1A RFI filter	Yes 25 m screened/armoured	Yes 25 m screened/armoured	No	No
3 x 480 V version with 1A RFI filter (R5: For IT mains)	Yes 5 m screened/armoured	Yes 5 m screened/armoured	No	No
1 x 200 V version with 1A RFI filter [1.]	Yes 40 m screened/armoured	Yes 40 m screened/armoured	Yes 15 m screened/armoured	No
3 x 200 V version with 1A RFI filter (R4: For use with RCD)	Yes 20 m screened/armoured	Yes 20 m screened/armoured	Yes 7 m screened/armoured	No
3 x 480 V version with 1A +1B RFI filter	Yes 50 m screened/armoured	Yes 50 m screened/armoured	Yes 25 m screened/armoured	No
1 x 200 V version with 1A +1B RFI filter [1.]	Yes 100 m screened/armoured	Yes 100 m screened/armoured	Yes 40 m screened/armoured	No
VLT 2880-2882	Emission			
	Industrial environment		Residential, commerce and light industry	
	EN 55011 class 1A		EN 55011 class 1B	
Setup	Cable-borne 150 kHz- 30 MHz	Radiated 30 MHz - 1 GHz	Cable-borne 150 kHz - 30 MHz	Radiated 30 MHz - 1 GHz
3 x 480 V version with 1B RFI filter	Yes 50 m	Yes 50 m	Yes 50 m	No

1. For VLT 2822-2840 3 x 200-240 V the same values apply as for the 480 V version with 1A RFI filter.

- **EN 55011: Emission**

Limits and methods of measurement of radio disturbance characteristics of industrial, scientific and medical (ISM) high-frequency equipment.

Class 1A:
Equipment used in an industrial environment.

Class 1B:
Equipment used in areas with a public supply network (residential, commerce and light industry).

EMC Immunity

In order to document immunity against electrical interference, the following immunity tests have been made on a system consisting of a frequency converter, a screened/armoured control cable and a control box with potentiometer, screened/armoured motor cable, screened/armoured brake cable and an LCP 2 with a cable.

The tests were performed in accordance with the following basic standards:

- **EN 61000-4-4 (IEC 61000-4-4): Burst transients** Simulation of interference brought about by switching with contactors, relays or similar devices.
- **EN 61000-4-5 (IEC 61000-4-5): Surge transients** Simulation of transients brought about e.g. by lightning that strikes near installations.
- **EN 61000-4-2 (IEC 61000-4-2) : Electrostatic discharges (ESD)**Simulation of electrostatic discharges from human beings.
- **EN 61000-4-3(IEC 61000-4-3): Incoming electromagnetic field radiation, amplitude modulated.**Simulation of the effects of radar and radio broadcast devices as well as mobile communication devices.
- **VDE 0160 class W2 test pulse: Mains transients** Simulation of high-energy transients generated by breaks in master fuses, connection to phase advancer batteries and the like.
- **EN 61000-4-6 (IEC 61000-4-6): RF Common mode** Simulation of the effect from radio-transmitting equipment connected to connection cables.

See following EMC immunity form.

Basic standard	Burst 61000-4-4	Surge 61000-4-5	ESD 61000-4-2	Radiated 61000-4-3	Mains distortion VDE 0160	RF CM voltage [2] 61000-4-6
Acceptance criterion	B	B	B	A		A
Port connection	CM	DM / CM		Field	DM	CM
Line		OK / OK				OK
Motor	OK					
Control lines	OK	- / OK [1]				OK
Relay	OK	- / OK				OK
Profibus	OK	- / OK [1]				OK
Signal interface <3 m	OK					
Enclosure			OK	OK		
Standard bus	OK	- / OK [1]				OK

Basic specifications					
Line	2 kV / DCN	2 kV / 4kV			10 Vrms
Motor					10 Vrms
Control lines	2 kV / CCC	2 kV/2 Ω[1]			10 Vrms
Relay	2 kV / CCC	2 kV/2 Ω[1]			10 Vrms
Profibus	2 kV / CCC	2 kV/2 Ω[1]			10 Vrms
Signal interface <3 m	2 kV / CCC				
Enclosure			8 kV AD 6 kV CD	10 V/m	
Standard bus	2 kV / CCC	2 kV/2 Ω[1]			10 Vrms

DM: Differential mode
CM: Common mode
CCC: Capacitive clamp coupling (5 kHz)
DCN: Direct coupling network (5 kHz)

1. Injection on cable shield.
2. Electromagnetic clamp.

Harmonic Current Emission

All 3 phase 380-480 V units comply with EN 61000-3-2.

Aggressive environments

As all other electronic equipment, a frequency converter contains a number of mechanical and electronic components, which to a varying extent are vulnerable to environmental impact.

Consequently, the frequency converter is not to be installed in environments, where liquids, particles or gases are in the air that would impact and damage the electronics. Unless the necessary measures are taken to protect the frequency converter, there is a risk of stoppages, which reduce the service life of the frequency converter.

Liquids can be carried through the air and condense in the frequency converter. In addition, liquids may facilitate galvanic corrosion of components and metal parts. Steam, oil and brine may cause corrosion of components and metal parts. In these areas, it is recommended to fit units in cabinets. As a minimum, cabinets should be enclosure IP 54.

Particles in the air, such as dust particles, may lead to mechanical, electrical and thermal faults on the frequency converter. Typical indicators that there are too many particles in the air are dust particles around the frequency converter fan. In very dusty areas, cabinet

fitting of units is recommended. As a minimum, cabinets should be enclosure IP 54.

Aggressive gases, such as sulphur, nitrogen and chlorine compounds, together with high humidity and temperature, facilitate possible chemical processes on the components of the frequency converter. These chemical processes quickly impact and damage the electronics. In these areas, cabinet fitting with fresh-air circulation in the cabinet is recommended, thereby ensuring that aggressive gases are kept away from the frequency converter.

NB!
Fitting of frequency converters in aggressive environments increases the risk of stoppages, in addition to considerably reducing the service life of the unit.

Before the frequency converter is installed, it must be checked whether there are liquids, particles or gases in the air. This can be done by looking at existing installations in the same environment. Typical indicators of harmful airborne liquids are water or oil on metal parts or corrosion of metal parts. Too many dust particles are typically observed on top of installation cabinets and on existing electrical installations. Indicators that there are aggressive gases in the air are copper rails and cable ends that are black on existing electrical installations.

Display readout

Fr
The frequency converter shows the present output frequency in Hertz [Hz].

Io
The frequency converter shows the present output current in Amps [A].

Uo
The frequency converter shows the present output voltage in Volt [V].

Ud
The frequency converter shows the intermediate circuit voltage in Volt [V].

Po
The frequency converter shows the calculated output in kilowatt [kW].

notrun
This message is shown if an attempt is made to change a parameter value while the motor is running. Stop the motor to change the parameter value.

LCP
This message is shown if an LCP 2 control unit is fitted and the [QUICK MENU] or [CHANGE DATA] key is activated. If an LCP 2 control unit is fitted you can only change parameters with that.

Ha
The frequency converter shows the present Hand mode reference frequency in Herz (Hz).

SC
The frequency converter shows scaled output frequency (the present output frequency x parameter 008).

Warnings/alarm messages

A warning or an alarm will appear in the display as a numerical code **Err. xx**. A warning will be shown on the display until the fault has been corrected, while an alarm will continue to flash until the [STOP/RESET] key is activated.The table shows the various warnings and alarms, and whether the fault locks the frequency converter. After a *Trip locked* the mains supply is cut off and the fault is corrected. The mains supply is reconnected and the frequency converter is reset. The frequency converter is now ready. A *Trip* can be reset manually in three ways:

1. Via the operating key [STOP/RESET].
2. Via a digital input.
3. Via serial communication.

It is also possible to choose an automatic reset in parameter 405 *Reset function*. When a cross appears in both warning and alarm, this can mean that a warning comes before an alarm. It can also mean that it is possible for the user to programme whether a warning or an alarm will appear for a given fault. For example, this is possible in parameter 128 *Motor thermal protection*. After a trip the motor will coast, and alarm and warning will blink on the frequency converter, but if the fault disappears only the alarm will blink. After a reset the frequency converter will be ready to start operation again.

No.	Description	Warning	Alarm	Trip locked
2	Live zero error (LIVE ZERO ERROR)	X	X	X
4	Mains phase loss (MAINS PHASE LOSS)	X	X	X
5	Voltage warning high (DC LINK VOLTAGE HIGH)	X		
6	Voltage warning low (DC LINK VOLTAGE LOW)	X		
7	Overvoltage (DC LINK OVERVOLT)	X	X	X
8	Undervoltage (DC LINK UNDERVOLT)	X	X	X
9	Inverter overload (INVERTER TIME)	X	X	
10	Motor overloaded (MOTOR, TIME)	X	X	
11	Motor thermistor (MOTOR THERMISTOR)	X	X	
12	Current limit (CURRENT LIMIT)	X	X	
13	Overcurrent (OVERCURRENT)	X	X	X
14	Earth fault (EARTH FAULT)		X	X
15	Switch mode fault (SWITCH MODE FAULT)		X	X
16	Short-circuit (CURR. SHORT CIRCUIT)		X	X
17	Serial communication timeout (STD BUS TIMEOUT)	X	X	
18	HPFB bus timeout (HPFB TIMEOUT)	X	X	
33	Out of frequency range (OUT FREQ RNG/ROT LIM)	X		
34	HPFB communication fault (PROFIBUS OPT. FAULT)	X	X	
35	Inrush fault (INRUSH FAULT)		X	X
36	Overtemperature (OVERTEMPERATURE)	X	X	
37-45	Internal fault (INTERNAL FAULT)		X	X
50	AMT not possible		X	
51	AMT fault re. nameplate data (AMT TYPE.DATA FAULT)		X	
54	AMT wrong motor (AMT WRONG MOTOR)		X	
55	AMT timeout (AMT TIMEOUT)		X	
56	AMT warning during AMT (AMT WARN. DURING AMT)		X	
99	Locked (LOCKED)	X		

LED indication	
Warning	yellow
Alarm	red
Trip locked	yellow and red

WARNING/ALARM 2: Live zero fault
The voltage or current signal on terminal 53 or 60 is below 50% of the preset value in parameter 309 or 315 *Terminal, min. scaling*.

WARNING/ALARM 4: Mains phase fault
No phase on mains supply side. Check the supply voltage to the frequency converter. This fault is only active in 3-phase mains supply. The alarm can also occur when the load is pulsing. In this instance the pulses must be dampened, e.g. using an inertia disc.

WARNING 5: Voltage warning high
If the intermediate circuit voltage (UDC) is higher than *Voltage warning high* the frequency converter will give a warning and the motor will continue to run unchanged. If the UDC remains above the voltage warning limit, the inverter will trip after a set time. The time depends on the device, and is set at 5 - 10 sec. Note: The frequency converter will trip with an alarm 7 (overvoltage). A voltage warning can occur when the connected mains voltage is too high. Check whether the supply voltage is suitable for the frequency converter, see *Technical data*. A voltage warning can also occur if the motor frequency is reduced too quickly due to ramp down time being too short.

WARNING 6: Voltage warning low
If the intermediate circuit voltage (UDC) is lower than *Voltage warning low* the frequency converter will give a warning and the motor will continue to run unchanged. A voltage warning can occur when the connected mains voltage is too low. Check whether the supply voltage is suitable for the frequency converter, see *Technical data*. When the frequency converter is switched off a brief warning 6 (and warning 8) appears.

WARNING/ALARM 7: Overvoltage
If the intermediate voltage (UDC) goes over the inverter's *Overvoltage limit* the inverter will be switched off until the UDC has once more fallen below the overvoltage limit. If the UDC remains above the overvoltag limit the inverter will trip after a set time. The time depends on the device, and is set at 5 - 10 sec. An

overvoltage in the UDC can occur when the motor frequency is reduced too quickly due to ramp down time being too short. When the inverter is switched off a trip reset is generated. Note: *Voltage warning high* (warning 5) will thus also be able to generate an alarm 7.

WARNING/ALARM 8: Undervoltage
If the intermediate circuit voltage (UDC) is lower than the inverter's *Undervoltage limit* the inverter will be switched off until the UDC once more goes above the undervoltage limit. If the UDC remains under the *undervoltage limit*, the inverter will trip after a set time. The time depends on the device, and is set at 2 - 15 sec. An undervoltage can occur when the connected mains voltage is too low. Check whether the supply voltage is suitable for the frequency converter, see *Technical data*. When the frequency converter is switched off a alarm 8 (and alarm 6) is displayed briefly and a trip reset is generated. Note: *Voltage warning low* (warning 6) will thus also be able to generate an alarm 8.

WARNING/ALARM 9: Inverter overload
Electronic thermal inverter protection indicates that the frequency converter is close to tripping due to overloading (output current too high for too long). The counter for electronic thermal inverter protection gives a warning at 98% and trips at 100% accompanied by an alarm. The frequency converter cannot be reset until the counter drops below 90%. This fault arises because the frequency converter has been overloaded for too long.

WARNING/ALARM 10: Motor overloaded
According to the electronic thermal inverter protection the motor is too hot. In parameter 128 the user can select whether the frequency converter should emit a warning or an alarm when the counter reaches 100%. This fault is due to the motor being overloaded by more than 100% for too long. Check that motor parameters 102-106 are set correctly.

WARNING/ALARM 11: Motor thermistor
The motor is too hot or the thermistor/thermistor connection has been disconnected. In parameter 128 *Thermal motor protection* the user can select whether the frequency transformer emits a warning or an alarm. Check that the PTC thermistor is correctly connected between terminals 18, 19, 27 or 29 (digital input) and terminal 50 (+ 10 V supply).

WARNING/ALARM 12: Current limit
The output current is greater than the value in parameter 221 *Current Limit* $_{LIM}$, and the frequency converter will trip after a set time, selected in parameter 409 *Trip delay overcurrent*.

WARNING/ALARM 13: Overcurrent
The inverter's peak current limit (approx. 200% of rated output current) has been exceeded. The warning will last approx. 1-2 sec, and the frequency converter will then trip and emit an alarm. Switch off the frequency converter and check whether the motor shaft can be turned, and whether the size of the motor is suitable for the frequency converter.

ALARM 14: Earth fault
There is a discharge from the output phases to earth, either in the cable between the frequency converter and the motor, or in the motor. Turn off the frequency converter and remove the earth fault.

ALARM 15: Switch mode fault
Fault in switch mode power supply (internal supply). Contact your Danfoss supplier.

ALARM: 16: Short-circuit
There is a short-circuit on the motor terminals or in the motor. Disconnect the mains supply to the frequency converter and remove the short-circuit.

WARNING/ALARM 17: Serial communication timeout
There is no serial communication to the frequency converter. The warning will only be active when 514 *Bus timeout function* is set to a value other than OFF. If parameter 514 *Bus timeout function* is set to *Stop and trip* [5], it will first give a warning and then ramp down and trip out accompanied by an alarm. Parameter 513 *Bus timeout* can if required be increased.

WARNING/ALARM 18: HPFB bus timeout
There is no serial communication to the frequency converter's communication option card. This warning will only be active when parameter 804 *Bus timeout function* is set to a value other than OFF. If parameter 804 *Bus timeout function* is set to *Stop and trip*, it will first give a warning and then ramp down and trip out accompanied by an alarm. Parameter 803 *Bus timeout* can if required be increased.

WARNING 33: Out of frequency range
This warning is active if the output frequency has reached *Output frequency low limit* (parameter 201) or *Output frequency high limit* (parameter 202). If the frequency converter is in *Process regulation, closed loop* (parameter 100) the warning will be active in the display. If the frequency converter is in another mode than *Process regulation, closed loop*, bit 008000 *Out of frequency range* in extended status word will be active, but there will not be a warning in the display.

WARNING/ALARM 34: HPFB communication fault
Communication fault only occurs in Fieldbus versions. Regarding alarmtype, please see parameter 953 in fieldbus literature.

ALARM 35: Inrush fault
This alarm occurs when the frequency converter has been connected to the mains supply too many times within 1 minute.

WARNING/ALARM 36: Overtemperature
If the temperature inside the power module rises above 75 - 85 °C (depending on the device) the frequency converter will emit a warning, and the motor will continue to run unchanged. If the temperature continues to rise, the switch frequency is reduced automatically. See *Temperature-dependent switching frequency*.
If the temperature inside the power module rises above 92 - 100 °C (depending on the unit) the frequency converter will cut out. The temperature fault cannot be reset until the temperature has dropped to below 70 °C. The tolerance is ± 5 °C. The temperature can be caused by the following:

- The ambient temperature too high.
- Motor cable too long.
- Too high mains voltage.

ALARM 37-45: Internal fault
If one of these failures occurs, please contact Danfoss.

Alarm 37, internal fault number 0: Communication fault between control card and BMC.

Alarm 38, internal fault number 1: Flash EEPROM fault on control card.

Alarm 39, internal fault number 2: RAM fault on control card.

Alarm 40, internal fault number 3: Calibration constant in EEPROM.

Alarm 41, internal fault number 4: Data values in EEPROM.

Alarm 42, internal fault number 5: Fault in motor parameter database.

Alarm 43, internal fault number 6: General power card fault.

Alarm 44, internal fault number 7: Minimum software version of control card or BMC.

Alarm 45, internal fault number 8: I/O fault (digital input/output, relay or analog input/output).

NB!
When restarting after an alarm 38-45, the frequency converter will display an alarm 37. In parameter 615 the actual alarm code can be read.

ALARM 50: AMT not possible
One of the following three possibilities can occur:

- The calculated R_S value falls outside permitted limits.
- The motor current in at least one of the motor phases is too low.
- The motor in use is too small for AMT calculations to be performed.

ALARM 51: AMT Fault regarding nameplate data
There is inconsistency between the registered motor data. Check the motor data for the relevant setup.

ALARM 52: AMT missing motor phase
The AMT function has detected a missing motor phase.

ALARM 55: AMT timeout
Calculations are taking too long, possibly due to noise on the motor cables.

ALARM 56: AMT warning during AMT
A frequency converter warning is given while AMT is being performed.

WARNING 99: Locked
See parameter 18.

Alarm/warning limits:

	Without brake	With brake	Without brake	With brake
VLT 2800	1 / 3 x 200 - 240 V [VDC]	1 / 3 x 200 - 240 V [VDC]	3 x 380 - 480 V [VDC]	3 x 380 - 480 V [VDC]
Undervoltage	215	215	410	410
Voltage warning low	230	230	440	440
Voltage warning high	385	400	765	800
Overvoltage	410	410	820	820

The voltages stated are the intermediate circuit voltage of the frequency converter with a tolerance of ± 5 %. The corresponding line voltage is the intermediate circuit voltage divided by 1,35.

Warning words, extended status words and Alarmwords

Warning words, status words and Alarm words appear in the display in Hex format. If there are several warnings, status words or alarms, a total of all the warnings, status words or alarms will be displayed. Warning words, status words and alarm words can also be read out using the serial bus in parameters 540, 541 and 538 respectively.

Bit (Hex)	Warning words
000008	HPFB bus timeout
000010	Standard bus timeout
000040	Current limit
000080	Motor thermistor
000100	Motor overload
000200	Inverter overload
000400	Undervolt
000800	Overvolt
001000	Voltage warning low
002000	Voltage warning high
004000	Phase loss
010000	Live zero error
400000	Out of frequency range
800000	Profibus communication fault
40000000	Switch mode warning
80000000	Heat sink temperature high

Bit (Hex)	Extended status words
000001	Ramping
000002	AMT running
000004	Start forw./reverse
000008	Slow down
000010	Catch-up
000020	Feedback high
000040	Feedback low
000080	Output current high
000100	Output current low
000200	Output frequency high
000400	Output frequency low
002000	Braking
008000	Out of frequency range

Bit (Hex)	Alarm words
000002	Triplock
000004	AMT tuning fail
000040	HPFB bus timeout
000080	Standard bus timeout
000100	Curr. short circuit
000200	Switch mode fault
000400	Earth fault
000800	Overcurrent
002000	Motor thermistor
004000	Motor overload
008000	Inverter overload
010000	Undervolt
020000	Overvolt
040000	Phase loss
080000	Live zero error
100000	Heat sink temperature too high
2000000	Profibus communication fault
8000000	Inrush fault
10000000	Internal fault

General technical data

Mains supply (L1, L2, L3):	
Supply voltage VLT 2803-2840 220-240 V (N, L1)	1 x 220/230/240 V ±10%
Supply voltage VLT 2803-2840 200-240 V	3 x 200/208/220/230/240 V ±10%
Supply voltage VLT 2805-2882 380-480 V	3 x 380/400/415/440/480 V ±10%
Supply voltage VLT 2805-2840 (R5)	380 / 400 V + 10 %
Supply frequency	50/60 Hz ± 3 Hz
Max. imbalance on supply voltage	± 2.0% of rated supply voltage
True Power Factor (λ)	0.90 nominal at rated load
Displacement Power Factor (cos φ)	near unity (> 0.98)
Number of connections at supply input L1, L2, L3	2 times/min.
Max. short-circuit value	100,000 A

See Special Conditions section in the Design Guide

Output data (U, V, W):	
Output voltage	0 - 100% of supply voltage
Output frequency	0.2 - 132 Hz, 1 - 1000 Hz
Rated motor voltage, 200-240 V units	200/208/220/230/240 V
Rated motor voltage, 380-480 V units	380/400/415/440/460/480 V
Rated motor frequency	50/60 Hz
Switching on output	Unlimited
Ramp times	0.02 - 3600 sec.

Torque characteristics:	
Starting torque (parameter 101 Torque characteristic = Constant torque)	160% in 1 min.*
Starting torque (parameter 101 Torque characteristics = Variable torque)	160% in 1 min.*
Starting torque (parameter 119 *High starting torque*)	180% for 0.5 sec.
Overload torque (parameter 101 Torque characteristic = Constant torque)	160%*
Overload torque (parameter 101 Torque characteristic = Variable torque)	160%*

Percentage relates to frequency converter's nominal current.
** VLT 2822 PD2 / 2840 PD2 1 x 220 V only 110% in 1 min.*

Control card, digital inputs:	
Number of programmable digital inputs	5
Terminal number	18, 19, 27, 29, 33
Voltage level	0 - 24 V DC (PNP positive logic)
Voltage level, logic '0'	< 5 V DC
Voltage level, logic '1'	> 10 V DC
Maximum voltage on input	28 V DC
Input resistance, R_i (terminals 18, 19, 27, 29)	approx. 4 kΩ
Input resistance, R_i (terminal 33)	approx. 2 kΩ

All digital inputs are galvanically isolated from the supply voltage (PELV) and other high-voltage terminals. See section entitled Galvanic Isolation.

Control card, analog inputs:	
Number of analog voltage inputs	1 pcs.
Terminal number	53
Voltage level	0 - 10 V DC (scaleable)
Input resistance, R_i	approx. 10 kΩ
Max. voltage	20 V
Number of analog current inputs	1 pcs.
Terminal number	60
Current level	0/4 - 20 mA (scaleable)
Input resistance, R_i	approx. 300 Ω
Max. current	30 mA
Resolution for analog inputs	10 bit
Accuracy of analog inputs	Max. error 1% of full scale
Scan interval	13.3 msec

The analog inputs are galvanically isolated from the supply voltage (PELV) and other high-voltage terminals. See section entitled Galvanic Isolation.

Control card, pulse inputs:	
Number of programmable pulse inputs	1
Terminal number	33
Max. frequency at terminal 33	67.6 kHz (Push-pull)
Max. frequency at terminal 33	5 kHz (open collector)
Min. frequency at terminal 33	4 Hz
Voltage level	0 - 24 V DC (PNP positive logic)
Voltage level, logic '0'	< 5 V DC
Voltage level, logic '1'	> 10 V DC
Maximum voltage on input	28 V DC
Input resistance, R_i	approx. 2 kΩ
Scan interval	13.3 msec
Resolution	10 bit
Accuracy (100 Hz- 1 kHz) terminal 33	Max. error: 0.5% of full scale
Accuracy (1 kHz - 67.6 kHz) terminal 33	Max. error: 0.1% of full scale

The pulse input (terminal 33) is galvanically isolated from the supply voltage (PELV) and other high-voltage terminals. See section entitled Galvanic Isolation.

Control card, digital/frequency output:	
Number of programmable digital/pulse outputs	1 pcs.
Terminal number	46
Voltage level at digital/frequency output	0 - 24 V DC (O.C PNP)
Max. output current at digital/frequency output	25 mA.
Max. load at digital/frequency output	1 kΩ
Max. capacity at frequency output	10 nF
Minimum output frequency at frequency output	16 Hz
Maximum output frequency at frequency output	10 kHz
Accuracy on frequency output	Max. error: 0.2 % of full scale
Resolution on frequency output	10 bit

The digital output is galvanically isolated from the supply voltage (PELV) and other high-voltage terminals. See section entitled Galvanic Isolation.

Control card, analog output:	
Number of programmable analog outputs	1
Terminal number	42
Current range at analog output	0/4 - 20 mA
Max. load to common at analog output	500 Ω
Accuracy on analog output	Max. error: 1.5 % of full scale
Resolution on analog output	10 bit

The analog output is galvanically isolated from the supply voltage (PELV) and other high-voltage terminals. See section entitled Galvanic Isolation.

Control card, 24 V DC output:	
Terminal number	12
Max. load	130 mA

The 24 V DC supply is galvanically isolated from the supply voltage (PELV) , but has the same potential as the analogue and digital inputs and outputs. See section entitled Galvanic Isolation.

Control card, 10 V DC output:	
Terminal number	50
Output voltage	10.5 V ±0.5 V
Max. load	15 mA

The 10 V DC supply is galvanically isolated from the supply voltage (PELV) and other high-voltage terminals. See section entitled Galvanic Isolation.

Control card, RS 485 serial communication:	
Terminal number	68 (TX+, RX+), 69 (TX-, RX-)
Terminal number 67	+ 5 V
Terminal number 70	Common for terminals 67, 68 and 69

Full galvanic isolation. See section entitled Galvanic Isolation.
For CANopen/DeviceNet units, see VLT 2800 DeviceNet manual, MG.90.BX.YY.

Relay outputs:[1)]	
Number of programmable relay outputs	1
Terminal number, control card (resisitvie and inductive load)	1-3 (break), 1-2 (make)
Max. terminal load (AC1) on 1-3, 1-2, control card	250 V AC, 2 A, 500 VA
Max. terminal load (DC1 (IEC 947)) on 1-3, 1-2, control card	25 V DC, 2 A /50 V DC, 1A, 50W
Min. terminal load (AC/DC) on 1-3, 1-2, control card	24 V DC 10 mA, 24 V AC 100 mA

The relay contact is separated from the rest of the circuit by strengthened isolation.

Note: Rated values resistive load - cosphi >0.8 for up to 300,000 operations.
Inductive loads at cosphi 0.25 approximately 50% load or 50% life time.

Cable lengths and cross sections:	
Max. motor cable length, screened/armoured cable	40 m
Max. motor cable length, unscreened/unarmoured cable	75 m
Max. motor cable length, screened/armoured cable and motor coil	100 m
Max. motor cable length, unscreened/unarmoured cable and motor coil	200 m
Max. motor cable length, screened/armoured cable and RFI/1B filter	200 V, 100 m
Max. motor cable length, screened/armoured cable and RFI/1B filter	400 V, 25 m
Max. motor cable length, screened/armoured cable and RFI 1B/LC filter	400 V, 25 m

Max. cross section to motor, see next section.

Max. cross section to control wires, rigid wire	1.5 mm^2/16 AWG (2 x 0.75 mm^2)
Max. cross section to control cables, flexible cable	1 mm^2/18 AWG
Max. cross section to control cables, cable with enclosed core	0.5 mm^2/20 AWG

When complying with EN 55011 1A and EN 55011 1B the motor cable must in certain instances be reduced. See EMC emission.

Control characteristics:	
Frequency range	0.2 - 132 Hz, 1 - 1000 Hz
Resolution of output frequency	0.013 Hz, 0.2 - 1000 Hz
Repeat accuracy of *Precise start/stop*(terminals 18, 19)	± 0.5 msec
System response time (terminals 18, 19, 27, 29, 33)	26.6 msec
Speed control range (open loop)	1:10 of synchronous speed
Speed control range (closed loop)	1:120 of synchronous speed
Speed accuracy (open loop)	150 - 3600 rpm: Max. error of ±23 rpm
Speed accuracy (closed loop)	30 - 3600 rpm: Max. error of ±7.5 rpm

All control characteristics are based on a 4-pole asynchronous motor

Surroundings:	
Enclosure	IP 20
Enclosure with options	NEMA 1
Vibration test	0.7 g
Max. relative humidity	5% - 93% during operation
Ambient temperature	Max. 45 °C (24-hour average max. 40 °C)

Derating for high ambient temperature, see special conditions in the Design Guide

Min. ambient temperature during full-scale operation	0 °C
Min. ambient temperature at reduced performance	- 10 °C
Temperature during storage/transport	-25 - +65/70 °C
Max. altitude above sea level	1000 m

Derating for high air pressure, see special conditions in the Design Guide

EMC standards, Emission	EN 61081-2, EN 61800-3, EN 55011
EMC standards, Immunity	EN 50082-1/2, EN 61000-4-2, EN 61000-4-3, EN 61000-4-4, EN 61000-4-5, EN 61000-4-6, EN 61800-3

See section on special conditions in the Design Guide

Safeguards:

- Electronic thermal motor protection against overload.
- Temperature monitoring of the power module ensures that the frequency converter cuts out if the temperature reaches 100 °C. An overload temperature cannot be reset until the temperature of the power module is below 70 °C.
- The frequency converter is protected against short-circuits on motor terminals U, V, W.
- If a mains phase is missing, the frequency converter will cut out.
- Monitoring of the intermediate circuit voltage ensures that the frequency converter cuts out if the intermediate circuit voltage is too low or too high.
- The frequency converter is protected against earth fault on motor terminals U, V, W.

Technical data, mains supply 1 x 220 - 240 V/3 x 200-240V

According to . international standards	Type	2803	2805	2807	2811	2815	2822	2822 PD2	2840	2840 PD2
Output current (3 x 200-240V)	$I_{INV.}$ [A]	2.2	3.2	4.2	6.0	6.8	9.6	9.6	16	16
	I_{MAX} (60s) [A]	3.5	5.1	6.7	9.6	10.8	15.3	10.6	25.6	17.6
Output power (230 V)	$S_{INV.}$ [KVA]	0.9	1.3	1.7	2.4	2.7	3.8	3.8	6.4	6.4
Typical shaft output	$P_{M,N}$ [kW]	0.37	0.55	0.75	1.1	1.5	2.2	2.2	3.7	3.7
Typical shaft output	$P_{M,N}$ [HP]	0.5	0.75	1.0	1.5	2.0	3.0	3.0	5.0	5.0
Max. cable cross section, motor	[mm²/AWG] 1)	4/10	4/10	4/10	4/10	4/10	4/10	4/10	4/10	16/6
Input current (1 x 220-240 V)	$I_{L,N}$ [A]	5.9	8.3	10.6	14.5	15.2	-	22.0	-	31.0
	$I_{L,MAX}$ (60s) [A]	9.4	13.3	16.7	23.2	24.3	-	24.3	-	34.5
Input current (3 x 200-240 V)	$I_{L,N}$ [A]	2.9	4.0	5.1	7.0	7.6	8.8	8.8	14.7	14.7
	$I_{L,MAX}$ (60s) [A]	4.6	6.4	8.2	11.2	12.2	14.1	9.7	23.5	16.2
Max. cable cross section, power	[mm²/AWG] 1)	4/10	4/10	4/10	4/10	4/10	4/10	4/10	4/10	16/6
Max. pre-fuses	IEC/UL 2) [A]	20/20	20/20	20/20	20/20	20/20	20/20	35/35	25/25	50/50
Efficiency 3)	[%]	95	95	95	95	95	95	95	95	95
Power loss at 100% load	[W]	24	35	48	69	94	125	125	231	231
Weight	[kg]	2.0	2.0	2.0	2.0	2.0	3,7	6.0	6.0	18.50
Enclosure 4	type	IP 20	IP 20	IP 20	IP 20	IP 20	IP 20	IP 20	IP 20	IP 20/ NEMA 1

1. American Wire Gauge. Max. cable cross section is the largest cable cross section that can be attached to the terminals. Always observe national and local regulations.
2. Type gG pre-fuses must be used for installation according to IEC rules. If you want to maintain UL/cUL you must use pre-fuses of the type Bussmann KTN-R 200 V, KTS-R 500 V or Ferraz Shawmut, type ATMR (max. 30A). The fuses must be placed for protection in a circuit that is capable of supplying a maximum of 100,000 amps RMS (symmetrical), 500 V maximum.
3. Measured using a 25 m screened/armoured motor cable with a rated load and rated frequency.
4. IP20 is standard for VLT 2805-2875, whereas NEMA 1 is an option.

Technical data, mains supply 3 x 380 - 480 V

According to international standards	Type	2805	2807	2811	2815	2822	2830
Output current	$I_{INV.}$ [A]	1.7	2.1	3.0	3.7	5.2	7.0
(3 x 380-480V)	I_{MAX} (60s) [A]	2.7	3.3	4.8	5.9	8.3	11.2
Output power (400 V)	$S_{INV.}$ [KVA]	1.1	1.7	2.0	2.6	3.6	4.8
Typical shaft output	$P_{M,N}$ [kW]	0.55	0.75	1.1	1.5	2.2	3.0
Typical shaft output	$P_{M,N}$ [HP]	0.75	1.0	1.5	2.0	3.0	4.0
Max. cable cross section, motor	[mm²/AWG] 1)	4/10	4/10	4/10	4/10	4/10	4/10
Input current	$I_{L,N}$ [A]	1.6	1.9	2.6	3.2	4.7	6.1
(3 x 380-480 V)	$I_{L,MAX}$(60s)[A]	2.6	3.0	4.2	5.1	7.5	9.8
Max. cable cross section, power	[mm²/AWG] 1)	4/10	4/10	4/10	4/10	4/10	4/10
Max. pre-fuses	IEC/UL 2) [A]	20/20	20/20	20/20	20/20	20/20	20/20
Efficiency 3)	[%]	96	96	96	96	96	96
Power loss at 100% load	[W]	28	38	55	75	110	150
Weight	[kg]	2.1	2.1	2.1	2.1	3.7	3.7
Enclosure 4	type	IP 20	IP 20	IP 20	IP 20	IP 20	IP 20

According to international standards	Type	2840	2855	2875	2880	2881	2882
Output current	$I_{INV.}$ [A]	9.1	12	16	24	32.0	37.5
(3 x 380-480V)	I_{MAX} (60s) [A]	14.5	19.2	25.6	38.4	51.2	60.0
Output power (400 V)	$S_{INV.}$ [KVA]	6.3	8.3	11.1	16.6	22.2	26.0
Typical shaft output	$P_{M,N}$ [kW]	4.0	5.5	7.5	11.0	15.0	18.5
Typical shaft output	$P_{M,N}$ [HP]	5.0	7.5	10.0	15.0	20.0	25.0
Max. cable cross section, motor	[mm²/AWG] 1)	4/10	4/10	4/10	16/6	16/6	16/6
Input current	$I_{L,N}$ [A]	8.1	10.6	14.9	24.0	32.0	37.5
(3 x 380-480 V)	$I_{L,MAX}$(60s)[A]	13.0	17.0	23.8	38.4	51.2	60
Max. cable cross section, power	[mm²/AWG] 1)	4/10	4/10	4/10	16/6	16/6	16/6
Max. pre-fuses	IEC/UL 2) [A]	20/20	25/25	25/25	50/50	50/50	50/50
Efficiency 3)	[%]	96	96	96	97	97	97
Power loss at 100% load	[W]	200	275	372	412	562	693
Weight	[kg]	3.7	6.0	6.0	18.5	18.5	18.5
Enclosure 4	type	IP20	IP20	IP20	IP20/ NEMA 1	IP20/ NEMA 1	IP20/ NEMA 1

1. American Wire Gauge. Max. cable cross section is the largest cable cross section that can be attached to the terminals. Always observe national and local regulations.
2. Type gG pre-fuses must be used for installation according to IEC rules. If you want to maintain UL/cUL you must use pre-fuses of the type Bussmann KTN-R 200 V, KTS-R 500 V or Ferraz Shawmut, type ATMR (max. 30A). The fuses must be placed for protection in a circuit that is capable of supplying a maximum of 100,000 amps RMS (symmetrical), 500 V maximum. See table under *Pre-fuses*.
3. Measured using a 25 m screened/armoured motor cable with a rated load and rated frequency.
4. IP20 is standard for VLT 2805-2875, whereas NEMA 1 is an option.

Available literature

Supplied with the unit

Below is a list of the literature available for VLT 2800. It must be noted that there may be deviations from one country to the next.

Supplied with the unit:	
Operating instructions	MG.28.AX.YY

Various literature for VLT 2800:	
Design Guide	MG.28.EX.YY
Data sheet	MD.28.AX.YY

Instructions for VLT 2800:	
LCP remote-mounting kit	MI.56.AX.51
Filter instruction	MI.28.B1.02
VLT 2800 DeviceNet cable	MI.28.F1.02
Cold plate	MI.28.D1.02
Precise stop	MI.28.C1.02

Communication with VLT 2800:	
Profibus manual	MG.90.AX.YY
VLT 2800 DeviceNet manual	MG.90.BX.YY

X = version numberYY = language version

Parameter list with factory settings

PNU #	Parameterdescription	Factory setting	4-setup	Conv. index	Data type
001	Language	English	No	0	5
002	Local/remote operation	Remote-controlled	Yes	0	5
003	Local reference	000,000.000	Yes	-3	4
004	Active Setup	Setup 1	No	0	5
005	Programming Setup	Active Setup	No	0	5
006	Setup copying	No copying	No	0	5
007	LCP copy	No copying	No	0	5
008	Display scaling	1.00	Yes	-2	6
009	Large display readout	Frequency [Hz]	Yes	0	5
010	Small display line 1.1	Reference [%]	Yes	0	5
011	Small display line 1.2	Motor current [A]	Yes	0	5
012	Small display line 1.3	Power [kW]	Yes	0	5
013	Local control	Remote control as par. 100	Yes	0	5
014	Local stop/reset	Active	Yes	0	5
015	Local jog	Not active	Yes	0	5
016	Local reversing	Not active	Yes	0	5
017	Local reset of trip	Active	Yes	0	5
018	Data change lock	Not locked	Yes	0	5
019	Operating status at power up	Forced stop, use saved ref.	Yes	0	5
020	Lock for Hand mode	Active	No	0	5
024	User-defined Quick Menu	Not active	No	0	5
025	Quick Menu Setup	000	No	0	6

4-Setup:
'Yes' means that the parameter can be programmed individually in each of the four Setups, i.e. one single parameter can have four different data values. 'No' means that the data value will be the same in all Set-ups.

Conversion index:
This number refers to a conversion figure to be used when writing or reading via serial communication with a frequency converter.
See *Data character* in *Serial communication* in the *VLT 2800 Design Guide.*

Data type:
Data type shows the type and length of the telegram.

Data type	Description
3	Integer 16
4	Integer 32
5	Unsigned 8
6	Unsigned 16
7	Unsigned 32
9	Text string

PNU #	Parameter-description	Factory setting	4-setup	Conv. index	Data-type
100	Configuration	Speed reg., open loop	Yes	0	5
101	Torque characteristics	Constant torque	Yes	0	5
102	Motor power $P_{M,N}$	depends on unit	Yes	1	6
103	Motor voltage $U_{M,N}$	depends on unit	Yes	-2	6
104	Motor frequency $f_{M,N}$	50 Hz	Yes	-1	6
105	Motor current $I_{M,N}$	depends on motor selected	Yes	-2	7
106	Rated motor speed	depends on par. 102	Yes	0	6
107	Automatic motor adjustment	Optimisation off	Yes	0	5
108	Stator resistance R_S	depends on motor selected	Yes	-3	7
109	Stator reactance X_S	depends on motor selected	Yes	-2	7
117	Resonance damping	OFF	Yes	0	6
119	High start torque	0.0 sec	Yes	-1	5
120	Start delay	0.0 sec	Yes	-1	5
121	Start function	Coast in start del.	Yes	0	5
122	Function at stop	Coast	Yes	0	5
123	Min. freq. for activation of par. 122	0.1 Hz	Yes	-1	5
126	DC braking time	10 sec.	Yes	-1	6
127	DC brake engaging frequency	OFF	Yes	-1	6
128	Thermal motor protection	No protection	Yes	0	5
130	Start frequency	0.0 Hz	Yes	-1	5
131	Voltage at start	0.0 V	Yes	-1	6
132	DC brake voltage	0%	Yes	0	5
133	Start voltage	depends on unit	Yes	-2	6
134	Load compensation	100 %	Yes	-1	6
135	U/f-ratio	depends on unit	Yes	-2	6
136	Slip compensation	100 %	Yes	-1	3
137	DC hold voltage	0%	Yes	0	5
138	Brake cut out value	3.0 Hz	Yes	-1	6
139	Brake cut in frequency	3.0 Hz	Yes	-1	6
140	Current, minimum value	0%	Yes	0	5
142	Leak reactance	depends on motor selected	Yes	-3	7
143	Internal ventilator control	Automatic	Yes	0	5
144	AC brake factor	1.30	Yes	-2	5
146	Reset voltage vector	Off	Yes	0	5

Factory Settings

PNU #	Parameter description	Factory setting	Changes during operation	4-setup	Conv. index	Data type
200	Output frequency range	Clockwise only, 0-132 Hz	No	Yes	0	5
201	Output frequency, low limit f_{MIN}	0.0 Hz	Yes	Yes	-1	6
202	Output frequency, high limit f_{MAX}	132 Hz	Yes	Yes	-1	6
203	Reference range	Min ref.-Max ref.	Yes	Yes	0	5
204	Minimum ref Ref_{MIN}	0.000 Hz	Yes	Yes	-3	4
205	Maximum ref Ref_{MAX}	50.000 Hz	Yes	Yes	-3	4
206	Ramp type	Linear	Yes	Yes	0	5
207	Ramp-up time 1	3.00 sec.	Yes	Yes	-2	7
208	Ramp-down time 1	3.00 sec.	Yes	Yes	-2	7
209	Ramp-up time 2	3.00 sec.	Yes	Yes	-2	7
210	Ramp-down time 2	3.00 sec.	Yes	Yes	-2	7
211	Jog ramp time	3.00 sec.	Yes	Yes	-2	7
212	Quick stop ramp-down time	3.00 sec.	Yes	Yes	-2	7
213	Jog frequency	10.0 Hz	Yes	Yes	-1	6
214	Reference function	Sum	Yes	Yes	0	5
215	Preset reference 1	0.00%	Yes	Yes	-2	3
216	Preset reference 2	0.00%	Yes	Yes	-2	3
217	Preset reference 3	0.00%	Yes	Yes	-2	3
218	Preset reference 4	0.00%	Yes	Yes	-2	3
219	Catch up/slow down reference	0.00%	Yes	Yes	-2	6
221	Current limit	160 %	Yes	Yes	-1	6
223	Warn. Low current	0.0 A	Yes	Yes	-1	6
224	Warn. High current	I_{MAX}	Yes	Yes	-1	6
225	Warn. Low frequency	0.0 Hz	Yes	Yes	-1	6
226	Warn. High frequency	132.0 Hz	Yes	Yes	-1	6
227	Warn. Low Feedback	-4000.000	Yes	Yes	-3	4
228	Warn. High Feedback	4000.000	Yes	Yes	-3	4
229	Frequency bypass, bandwidth	0 Hz (OFF)	Yes	Yes	0	6
230	Frequency bypass 1	0.0 Hz	Yes	Yes	-1	6
231	Frequency bypass 2	0.0 Hz	Yes	Yes	-1	6

PNU #	Parameterdescription	Factory setting	4-setup	Conv. index	Data type
302	Digital input, term. 18	Start	Yes	0	5
303	Digital input, term. 19	Reversing	Yes	0	5
304	Digital input, term. 27	Reset and coast inverse	Yes	0	5
305	Digital input, term. 29	Jog	Yes	0	5
307	Digital input, term. 33	No function	Yes	0	5
308	Term. 53, analogue input voltage	Reference	Yes	0	5
309	Term. 53, min scaling	0.0 V	Yes	-1	6
310	Term. 53, max scaling	10.0 V	Yes	-1	6
314	Term. 60, analogue input current	No function	Yes	0	5
315	Term. 60, min scaling	0.0 mA	Yes	-4	6
316	Term. 60, max scaling	20.0 mA	Yes	-4	6
317	Time out	10 sec.	Yes	-1	5
318	Function after timeout	No function	Yes	0	5
319	Term. 42, analogue output	0-I_{MAX} = 0-20 mA	Yes	0	5
323	Relay output	Control ready	Yes	0	5
327	Pulse ref./FB	5000 Hz	Yes	0	7
341	Term. 46 digital output	Control ready	Yes	0	5
342	Term. 46 Max. pulse output	5000 Hz	Yes	0	6
343	Precise stop function	Normal ramp stop	Yes	0	5
344	Counter value	100000 pulses	Yes	0	7
349	Speed comp delay	10 ms	Yes	-3	6

4-Setup:
'Yes' means that the parameter can be programmed individually in each of the four Setups, i.e. one single parameter can have four different data values. 'No' means that the data value will be the same in all Setups.

Conversion index:
This number refers to a conversion figure to be used when writing or reading via serial communication with a frequency converter.
See *Data character* in *Serial communication* in the *VLT 2800 Design Guide.*

Data type:
Data type shows the type and length of the telegram.

Data type	Description
3	Integer 16
4	Integer 32
5	Unsigned 8
6	Unsigned 16
7	Unsigned 32
9	Text string

PNU #	Parameter description	Factory setting	4-setup	Conv. index	Data type
400	Brake function	Depends on unit type	No	0	5
405	Reset function	Manual reset	Yes	0	5
406	Aut. restart time	5 sec.	Yes	0	5
409	Trip delay overcurrent	Off (61 sec.)	Yes	0	5
411	Switching frequency	4.5 kHz	Yes	0	6
412	Var. carrier frequency	No LC-filter	Yes	0	5
413	Overmodulation function	On	Yes	0	5
414	Min. feedback	0.000	Yes	-3	4
415	Max. feedback	1500.000	Yes	-3	4
416	Process units	No unit	Yes	0	5
417	Speed PID propor.ampl.	0.010	Yes	-3	6
418	Speed PID intergra.	100 ms	Yes	-5	7
419	Speed PID differentiation time	20.00 ms	Yes	-5	7
420	Speed PID diff. amplification limit	5.0	Yes	-1	6
421	Speed PID lowpass filter	20 ms	Yes	-3	6
423	U1 voltage	par. 103	Yes	-1	6
424	F1 frequency	Par. 104	Yes	-1	6
425	U2 voltage	par. 103	Yes	-1	6
426	F2 frequency	par. 104	Yes	-1	6
427	U3 voltage	par. 103	Yes	-1	6
428	F3 frequency	par. 104	Yes	-1	6
437	Proc. PID no/inv.	Normal	Yes	0	5
438	Proc. PID anti wind.	Active	Yes	0	5
439	Proc. PID start frequency	Par. 201	Yes	-1	6
440	Proc. PID start proportional ampl.	0.01	Yes	-2	6
441	Proc. PID integration time	Off (9999.99 s)	Yes	-2	7
442	Proc. PID differentiation time	Off (0.00 s).	Yes	-2	6
443	Proc. PID diff. ampl. limit	5.0	Yes	-1	6
444	Proc. PID lowpass filter time	0.02 s	Yes	-2	6
445	Flying start	Not possible	Yes	0	5
451	Speed PID feedforward factor	100%	Yes	0	6
452	Controller range	10 %	Yes	-1	6
456	Brake voltage reduce	0	Yes	0	5
457	Phase loss function	Trip			
461	Feedback conversion	Linear	Yes	0	5
462	Enhanced sleep mode timer	Off			
463	Boost setpoint	100%			
464	Wakeup pressure	0			
465	Minimum pump frequency	20			
466	Maximum pump frequency	50			
467	Minimum pump power	0 W			
468	Maximum pump power	0 W			
469	No flow power compensation	1.2			
470	Dry run time out	Off			
471	Dry run interlock timer	30 min.			
484	Initial ramp	Off			
485	Fill rate	Off			
486	Filled setpoint	Parameter 414			

PNU #	Parameterdescription	Factory setting	4-setup	Conv. index	Data type
500	Address	1	No	0	5
501	Baudrate	9600 Baud	No	0	5
502	Coasting stop	Logic or	Yes	0	5
503	Quick stop	Logic or	Yes	0	5
504	DC brake	Logic or	Yes	0	5
505	Start	Logic or	Yes	0	5
506	Reversing	Logic or	Yes	0	5
507	Selection of Setup	Logic or	Yes	0	5
508	Selection of preset ref.	Logic or	Yes	0	5
509	Bus jog 1	10.0 Hz	Yes	-1	6
510	Bus jog 2	10.0 Hz	Yes	-1	6
512	Telegram profile	FC protocol	Yes	0	5
513	Bus time interval	1 sec.	Yes	0	5
514	Bus time interval function	Off	Yes	0	5
515	Data readout: Reference %		No	-1	3
516	Data readout: Reference [unit]		No	-3	4
517	Data readout: Feedback [unit]		No	-3	4
518	Data readout: Frequency		No	-1	3
519	Data readout: Frequency x scaling		No	-1	3
520	Data readout: Motor current		No	-2	7
521	Data readout: Torque		No	-1	3
522	Data readout: Power [kW]		No	1	7
523	Data readout: Power [HP]		No	-2	7
524	Data readout: Motor voltage [V]		No	-1	6
525	Data readout: DC Link voltage		No	0	6
526	Data readout: Motor thermal load		No	0	5
527	Data readout: Inverter thermal load		No	0	5
528	Data readout: Digital input		No	0	5
529	Data readout: Analogue input, term. 53		No	-1	5
531	Data readout: Analogue input, term. 60		No	-4	5
532	Data readout: Pulse reference		No	-1	7
533	Data readout: External reference		No	-1	6
534	Data readout: Status word		No	0	6
535	Data readout: Bus feedback 1		No	0	3
537	Data readout: Inverter temperature		No	0	5
538	Data readout: Alarm word		No	0	7
539	Data readout: Control word		No	0	6
540	Data readout: Warning word		No	0	7
541	Data readout: Extended status word		No	0	7
544	Data readout: Pulse count		No	0	7

PNU #	Parameterdescription	Factory setting	4-setup	Conv. index	Data type
600	Operating hours		No	73	7
601	Hours run		No	73	7
602	kWh counter		No	2	7
603	Number of cut ins		No	0	6
604	Number of overtemperatures		No	0	6
605	Number of overvoltages		No	0	6
615	Fault log: Error code		No	0	5
616	Fault log: Time		No	0	7
617	Fault log: Value		No	0	3
618	Reset of kWh counter	No reset	No	0	7
619	Reset of running hours counter	No reset	No	0	5
620	Operation mode	Normal operation	No	0	5
621	Nameplate: Unit type		No	0	9
624	Nameplate: Software version		No	0	9
625	Nameplate: LCP identification no.		No	0	9
626	Nameplate: Database identification no.		No	-2	9
627	Nameplate: Power parts version		No	0	9
628	Nameplate: Application option type		No	0	9
630	Nameplate: Communication option type		No	0	9
632	Nameplate: BMC software identification		No	0	9
634	Nameplate: Unit identification for communication		No	0	9
635	Nameplate: Software parts no.		No	0	9
640	Software version		No	-2	6
641	BMC software identification		No	-2	6
642	Power card identification		No	-2	6
678	Configure control card				
700-	Used for wobble function, please see MI28J2xx				

4-Setup:

'Yes' means that the parameter can be programmed individually in each of the four Setups, i.e. one single parameter can have four different data values. No' means that the data value will be the same in all Set-ups.

Conversion index:

This number refers to a conversion figure to be used when writing or reading via serial communication with a frequency converter.

See *Data character* in *Serial communication* in the *VLT 2800 Design Guide.*

Data type:

Data type shows the type and length of the telegram.

Data type	Description
3	Integer 16
4	Integer 32
5	Unsigned 8
6	Unsigned 16
7	Unsigned 32
9	Text string

Index

4

4-20 mA reference 58

5

50 Hz counter-clockwise to 50 Hz clockwise 58

A

AC brake 98
Accessories for the VLT 2800 22
Acoustic noise 141
Active Setup 62
Address 126
Aggressive environments 147
Air humidity 143
Analogue input 91
Analogue output 93
Automatic motor tuning 31
Automatic motor tuning 71

B

Baudrate 126
Brake connection 53
Brake cut in frequency 77
Brake cut out value 77
Brake function 98
Brake resistance 23
Brake resistor 10
Brake resistors 27
Brake Voltage Reduce 108
Braking power 24
Bus jog 129
Bus option 11
Bus time interval 129

C

Cables 42
Catch up 85
CE labelling 8
CHANGE DATA 29
Connection of a 2-wire transmitter 57
Connection of mechanical brake 59
Constant torque 69
Control cable 42
Control cables 56
Control cables 55
Control keys 29
control panel 29
Control principle 6
Control terminals 54
Control unit 11
Control unit 29
Control word 122
Control Word 119
Counter stop via terminal 33 59
Counter value 96
Current limit, 85
Current, minimum value 77

D

Data Character (byte) 117
Data readout 130
DC brake time 74
DC brake voltage 76
DC Braking 74
DC hold voltage 77
Derating for air pressure 142
Derating for ambient temperature 141
Derating for high switching frequency 142
Derating for long motor cables 142
Derating for running at low speed 142
DeviceNet 11
Diagram 47
Digital / pulse output 95
Digital inputs 88
Dimensions 37
Direction of motor rotation 51
Display 29
Display mode 30
Display mode 32
Display mode 33
Display readout 30
Display readout 149
Display scaling of output frequency 63
DU/dt on motor 140
Dynamic braking 23

E

Earth connection 53
Earth leakage current 139
Earthing 42
Earthing of screened/armoured control cables 46
Efficiency 143
Electrical installation 48
Electrical installation, control cables 55
EMC compliant cables 45
EMC emission 145
EMC Immunity 146
EMC standards 145
EMC-correct electrical installation 44
ETR - Electronic Thermal Relay 75
Extra protection 42
Extreme operating conditions 139

F

Fan control 78
Fault log 134
Feedback 102
Feedback conversion 108
feedback range 101
Feedback, 99
Fieldbus 122
Fieldbus option 11
Flying start 107
Four Setups 62
Frequence bypass, bandwidth 87
Function at stop 74

G

Gain AC brake 78
Galvanic Isolation (PELV) 139

H

Hand Auto 30
Hand operation 68
Handling of references 81
Harmonics 144
High voltage test 42
High voltage warning 5
High voltage warning 42

I

Initialise 135
Integration 41
IT mains 51

J

Jog frequency 84
Jog ramp time 83

L

Language 61
Large display readout 63
LC filter 14
LCP 32
LCP copy 63
Leakage reactance 78
Literature 161
Load compensation 76
Load sharing 54
Local reference 61
Lock for data changes 67
Lowpass filter 102

M

mains cable 42
Mains connection 50
Mains protector 6
Mains supply 159
Mains voltage 9
Manual initialisation 29
Manual initialisation 36
Maximum Pulse 29 95
MCT 10 21
Mechanical brake 54
Mechanical brake 59
Mechanical installation 41
Menu mode 30
Menu mode 30
Motor cables 52
Motor coils 12
Motor coils 38
Motor connection 51
Motor current 70
Motor frequency 70
Motor power 70
Motor thermal protection 53
Motor voltage 70

O

Operating Data 134
Operating mode at power-up, local operation 67
Order form 19
Ordering numbers for VLT 2800 200-240 V 16
Ordering numbers for VLT 2800 380-480V 17
Output frequency 80
Overmodulation function 99

P

Parallel connection of motors 52
Parameter list with factory settings 162
PC Software tools 21
Peak voltage 140
Phase loss function 108
PID functions 101
PID-controller - closed loop process control 59
Potentiometer reference 57
Power factor 144
Precise stop function 96
Pre-fuses 50
Preset reference 85
Preset references 58
Process control, closed loop 69
Process PID 105
Process regulation 100
Process units 100
Profibus 11
Profibus 12 Mbaud Version 138
Profibus DP-V1 21
Programming Setup 62
Protections 6
Protocol 132
Protocols 115
Pulse reference/feedback 95
Pulse start/stop 57

Q

Quick menu 30
Quick menu 30
QUICK MENU 29
Quick Menu setup 68
Quick menu, userdefined 68
Quick-stop ramp-down time 84

R

Ramp type 82
Ramp-down time 83
Ramp-up time 83
Rated motor speed 70
RCD 53
RCD relays 42
Reference 101
Reference function 85
Reference, 82
Regulators 100
Relative 85
Relay connection 56
Relay output 1-3 93
Reset function 98
Reset voltage vector 78
Resonance damping 72
reversing 89
RFI 1B filter 13
RFI 1B filter 38
RFI 1B/LC filter 14
RFI switch 51
Rise time 140

S

Screened/armoured cables 42
Setup configuration 62
Setup copying 63
Setup shift 62
Short circuit 139
Side-by-side 41
Slip compensation 77
Slow down 85
Software Dialog 56
Spacing for mechanical installation 41
Special motor mode 69
Speed comp delay 96
Speed control, closed loop 69
Speed control, open loop 69
Speed PID 103
Speed regulation 100
Speed up/down 57
Square root 108
Start 107
Start delay 73
Start frequency 75
Start function 73
Start torque 73
Start voltage 76
Start/stop 57
Stator reactance 72
Stator resistance 71
Status word 123
Status Word 121
STOP/RESET 29
Sub D plug 56
Sum 85
Switches 1-4 56
Switching frequency 99
Switching on the input 140

T

Telegram Profile 129
Telegram Structure 115
Telegram Traffic 115
Temperature-dependent switch frequency 142
Terminal 42 93
Terminal 46 95
Terminal 53 91
Terminal 60 91
Terminal cover 38
Terminals 57
The differentiator 101
Thermal motor protection 75
Thermistor 75
Thermistor 90
Tightening Torque, Power Terminals 54
Time out 92
Torque characteristic 69

U

U/f-ratio 77
UL Standard 143

V

Variable torque 69
Vibration and shock 143

W

Warning 108
Warning words, extended status words and Alarmwords 153
Warnings/alarm messages 149